Thermal Circuit Breaker 3120-F...

Description

The 3120 circuit breaker/switch combination is an ON/OFF switch with integral overcurrent protection (S-type TO CBE to EN/IEC 60934). The trip element is a bimetal. Type 3120 is ideally suited for overload protection of motors, pumps, transformers and cables.
The 3120 circuit breaker is also available as a switch-only version in accordance with the IEC/EN 61058 (see data sheet switch 3120-F-..Q1).

Product characteristics:
- rocker or push button actuation
- single pole and double pole versions
- reliable switching behaviour (positively trip-free)
- convenient snap-in mounting
- international approvals

Options and add-on modules:
- illumination
- water splash protection
- auxiliary contacts
- under voltage trip
- remote trip
- magnetic trip
- push-in terminals
- appliance inlet module

Typical applications

Medical and laboratory equipment, apparatus and machine construction, professional tools, household and garden appliances, offices machines, audio equipment, machine tools

Current ratings and internal resistance values

Current rating (A)	Internal resistance per pole (Ω)	Current rating (A)	Internal resistance per pole (Ω)
0.1	94	4	0.0435
0.2	24	4.5	0.0435
0.3	12	5	0.0325
0.4	5.30	6	0.0215
0.5	4.20	7	0.0165
0.6	2.90	8	0.0165
0.8	1.50	10	< 0.02
1	0.9	12	< 0.02
1.2	0.80	14	< 0.02
1.5	0.45	15	< 0.02
2	0.27	16	< 0.02
2.5	0.0785	18	< 0.02
3	0.0595	20	< 0.02
3.5	0.0565		

Current consumption of illumination

Operating voltage	Current consumption		
	Y	R	G
DC 12 V	5.2 mA	2 mA	1.4 mA
DC 24 V	4.5 mA	2.2 mA	1.6 mA
DC 48 V	4.5 mA	2 mA	1.6 mA
AC 115 V	2.8 mA	1.1 mA	1 mA
AC 230 V	2.2 mA	0.9 mA	0.9 mA

Technical data

For details please see	Technical information	
Rated voltage	AC 240 V, DC 50 V	
Current rating range	0.1...20 A (up to 30A upon request for single pole units)	
Typical life 1-pole		
AC 240 V: 0.1...20 A	30,000 operations at 1 x I_N, inductive	
DC 50 V: 0.1...4 A	30,000 operations at 1 x I_N, inductive	
4.5...16 A	30,000 operations at 1 x I_N, resistive	
DC 28 V: 0.1...20 A	30,000 operations at 1 x I_N, inductive	
Typical life 2-pole		
AC 240 V: 0.1...16 A	50,000 operations at 1 x I_N, inductive	
17...20 A	30,000 operations at 1 x I_N, inductive	
DC 50 V: 0.1...16 A	50,000 operations at 1 x I_N, inductive	
17...20 A	50,000 operations at 1 x I_N, inductive	
Ambient temperature	-30 … 60 °C	
Insulation coordination (IEC 60664)	2.5 kV /2 reinforced insulation at operating area	
Dielectric strength		
Operating area pole to pole (2-pole)	test voltage AC 3,000 V test voltage AC 1,500 V	
Insulation resistance	> 100 MΩ (DC 500 V)	
Interrupting capacity I_{cn}	0.1...2 A	10 x I_N
	2.5...20 A	1-pole 150 A 2-pole 250 A

Interrupting capacity (UL 1077)

	I_N	U_N	I_{nc}
1-pole, 2- pole	0.1...20 A	AC 250 V	5000 A, C, 1
1-pole, 2- pole	0.1...20 A	DC 50 V	1000 A, C, 1

Degree of protection (IEC 60529)	operating area IP40 terminal area IP00 with water splash cover IP54 or IP66
Vibration	8 g (57-500 Hz), ± 0.61 mm (10-57 Hz) test to IEC 60068-2-6, test Fc 10 frequency cycles/axis
Shock	30 g (11 ms) test to IEC 60068-2-27, test Ea
Corrosion	96 hours at 5 % salt mist, test to IEC 60068-2-11, test Ka
Humidity	240 hrs in 95 % RH test to IEC 60068-2-78, test Cab
Mass	approx. 33 g (2-pole) approx. 27 g (1-pole) approx. 42 g (2-pole with PT terminals)

1

Order numbering code

Type No.
3120 thermal rocker-actuated circuit breaker

Mounting method
F flange mounting snap-in frame

Size of frame
3 standard, to fit mounting cut-out 50.5 x 21.5 mm
5 standard, to fit mounting cut-out 44.5 x 22 mm
7 special style, to fit mounting cut-out 44.5 x 22 mm

Number of poles
1 1-pole, thermally protected
2 2-pole, thermally protected
5 2-pole, 1-pole thermally protected

Mounting frame design (F3 & F5)
1 collar height 1 mm
3 collar height 9 mm
4 collar height 2 mm with water splash protection (IP54)

Mounting frame design (F7)
R black
T black with snap-on water splash cover

Terminal configuration
PT push-in terminals
P7 blade terminals
H7 as P7, terminals 11 and 21 with flat head screws M3.5 - standard for units with undervoltage release module
N7 as P7, with additional shunt terminals 12(i) and 22(i)
G7 as N7, terminals 11 and 21 with flat head screws M3.5

Characteristic curve
T1 thermal trip

Actuator style
W rocker for frame size F3 & F5
A rocker for frame size F7

Colour and illumination
01. rocker black opaque
02. rocker white opaque
04. rocker red opaque
14. R rocker red translucent with LED illumination
15. Y rocker orange translucent with LED illumination
19. G rocker green translucent with LED illumination

Marking for rocker style W
A D F Q X

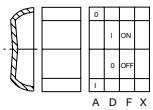

Q: 0 and 1 moulded in

Marking for rocker style A
Q »I« and »O« moulded in

Illumination voltage range
(= operating voltage)
1 DC 12 V
2 DC 24 V
3 AC 115 V
4 AC 230 V
5 DC 48 V

3120 -F 7 2 R - P7 T1 -A 14 QR 4

Current ratings
0.1...20 A

3120 -F 7 2 R - P7 T1 -A 14 QR 4 - 10 A ordering example

Order numbering code

Type No.
3120 thermal circuit breaker with push button actuation

Mounting
F flange mounting snap-in frame

Size
2 special frame for fitting splash cover
3 mounting cut-out 50.5 x 21.5 mm (panel thickness 1-6.35 mm)

Number of poles
1 1-pole, thermally protected
2 2-pole, thermally protected
5 2-pole, 1-pole thermally protected

Style
F frame with 2 push buttons
G frame with one push button (reset only)

Terminal configuration
PT push-in terminals
P7 blade terminals
H7 as P7, terminals 11 and 21 with flat head screws M3.5 - standard for units with undervoltage release module
N7 as P7, with additional shunt terminals 12(i) and 22(i)
G7 as N7, terminals 11 and 21 with flat head screws M3.5

Characteristic curve
T1 thermal trip

Actuators / colour / illumination
D01X 1 push button* black opaque
D02X 1 push button* white opaque
D04X 1 push button* red opaque
D19XG 1 push button* green translucent with LED illumination
SGRX 2 push buttons green/red opaque without illumination
SGRXG 2 push buttons green/red translucent with LED illumination

Illumination voltage range
(= operating voltage)
1 DC 12 V
2 DC 24 V
3 AC 115 V
4 AC 230 V
5 DC 48 V

Current ratings
0.1...20 A

3120- F 3 2 F - P7 T1- S GRXG 4-10 A ordering example

*reset only

Packaging unit:
20, 25, 35, 50 or 60 pcs, depending on the version

Preferred types

preferred type F7 2-pole protected	preferred ratings (A)													
	0.5	1	1.5	2	3	4	5	6	8	10	12	15	16	20
3120-F72R-P7T1-A14QR4-	x	x	x	x	x	x	x	x	x	x	x	x	x	x
preferred type F3 1-pole protected	0.5	1	2	3	4	5	6	8	10	12	15	16	20	
3120-F311-P7T1-W02D-		x			x	x	x	x	x		x		x	
preferred type F3 2-pole protected	0.5	1	2	3	4	5	6	8	10	12	15	16	20	
3120-F321-P7T1-W01D-	x	x	x	x	x	x	x	x	x	x	x	x	x	
preferred type F5 2-pole protected	0.5	1	2	3	4	5	6	8	10	12	15	16	20	
3120-F521-P7T1-W01D-		x	x	x	x	x	x	x	x	x	x	x	x	

Approvals

Approval authority	Standard	Rated voltage	Current rating range
VDE	IEC/EN 60934	AC 240 V DC 50 V DC 50 V DC 28 V	0.1 A…20 A 0.1...20A (2-pole) 0.1...4 A (1-pole) 0.1 A…20 A
UL	UL 1077	AC 250 V DC 50 V AC 250 V	0,1 A…20 A 0,1 A…20 A 30 A (2 poles in parallel)
CSA	C22.2 No 235	AC 250 V DC 50 V AC 250 V	0,1 A…20 A 0,1 A…20 A 30 A (2 poles in parallel)
CQC	GB 17701	AC 240 V DC 50 V	0.1 A…20 A 0.1 A…20 A

Schematic diagrams

2-pole,
thermally protected on both poles

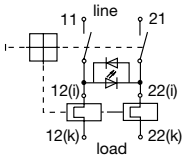

2-pole,
thermally protected on one pole only

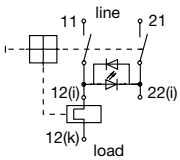

1-pole,
thermally protected

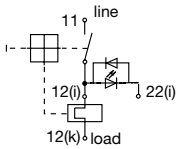

Time/current characteristics

single or double pole load

0.1…2 A

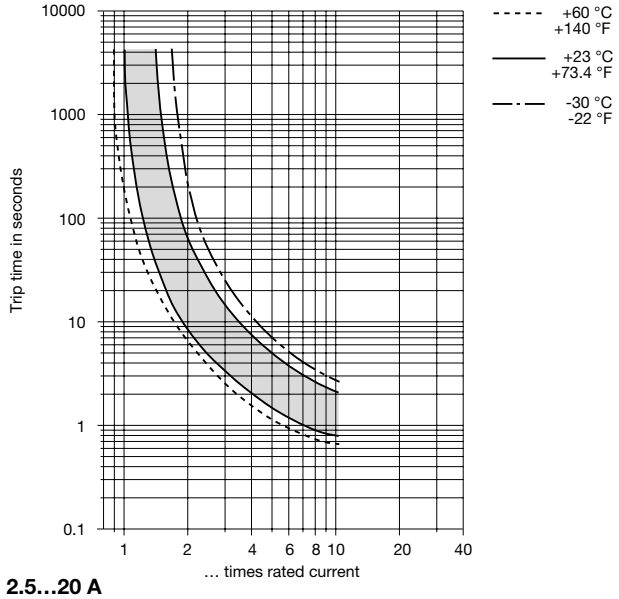

2.5…20 A

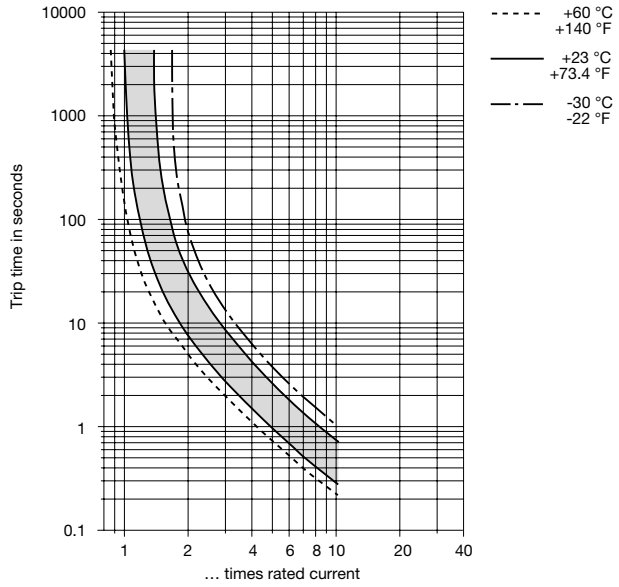

The time/current characteristic depends on the ambient temperature. In order to eliminate nuisance tripping, please multiply the current rating by a derating factor (see chapter Technical Information)

ambient temperature [°C]	-30	-20	-10	0	23	40	50	60
Temperature factor	0.8	0.84	0.88	0.92	1	1.08	1.14	1.23

1

Dimensions

3120-F2.F-...

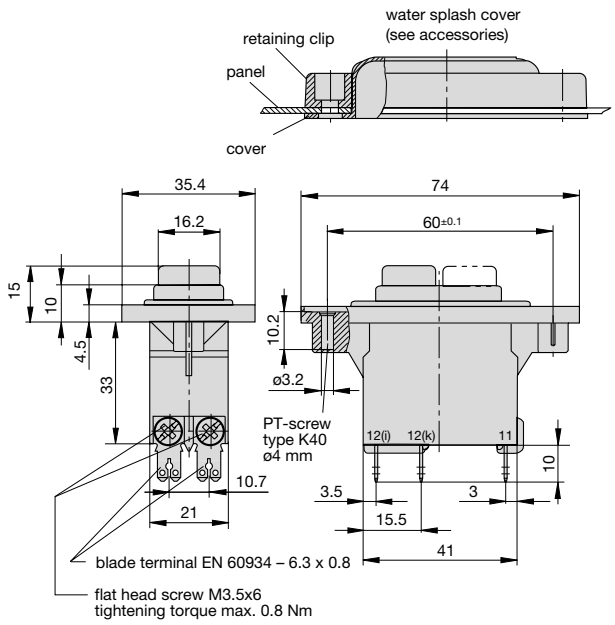

3120-F2.F-PT...

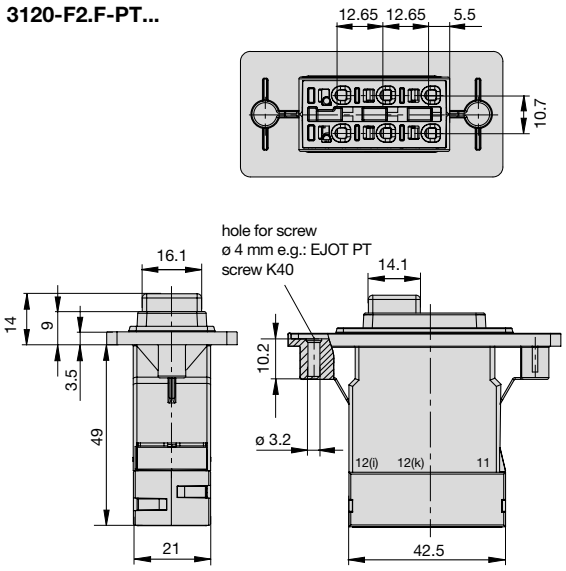

3120-F3.1

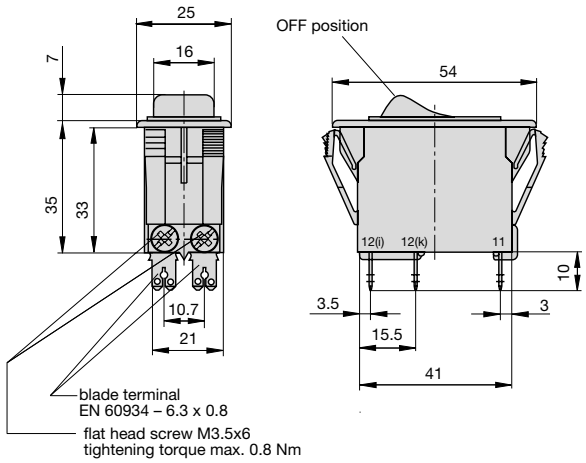

3120-F3.1-PT

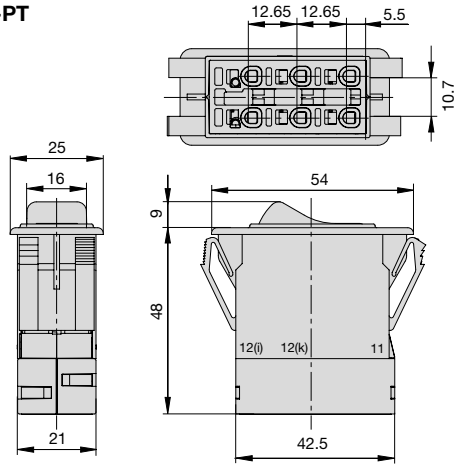

3120-F 3.3
collar height 9 mm

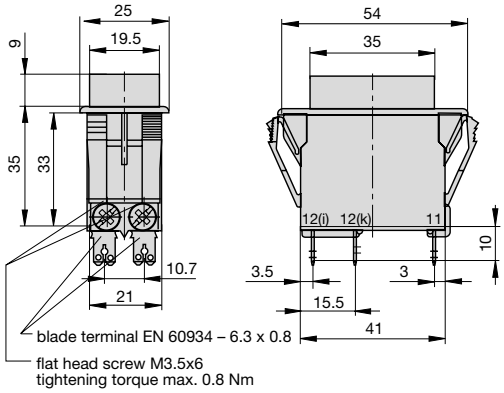

3120-F 3.4
with water splash protection (IP54)

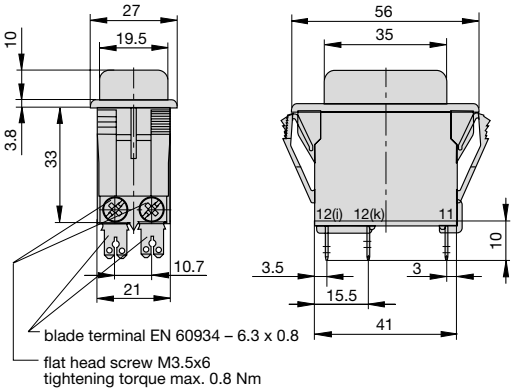

Dimensions

3120-F3.F-...-S...

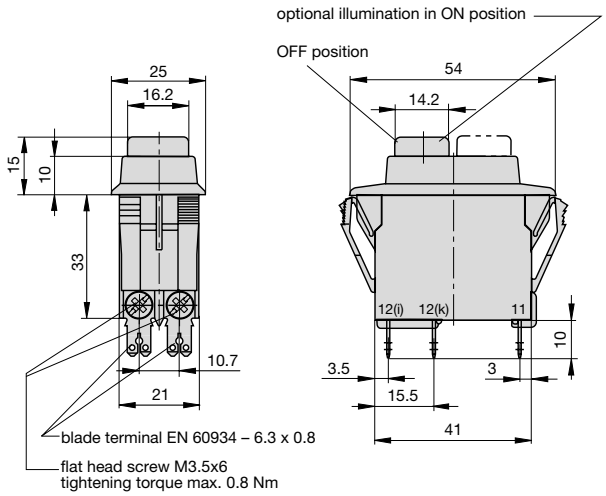

3120-F3.G-...-D...

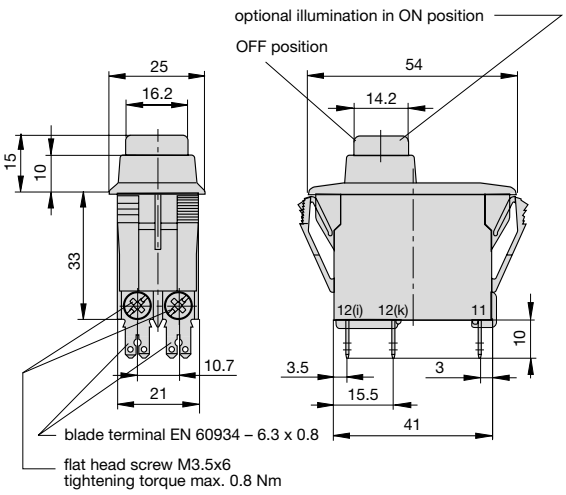

3120-F 5.1

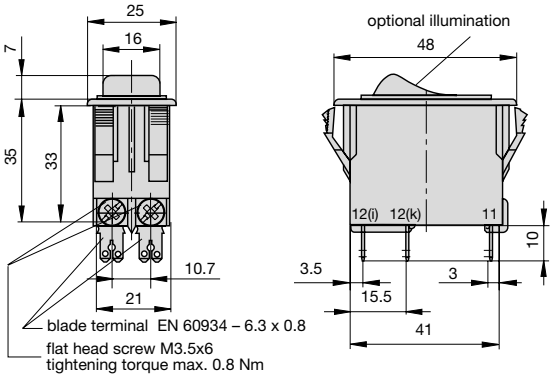

3120-F5.1-PT

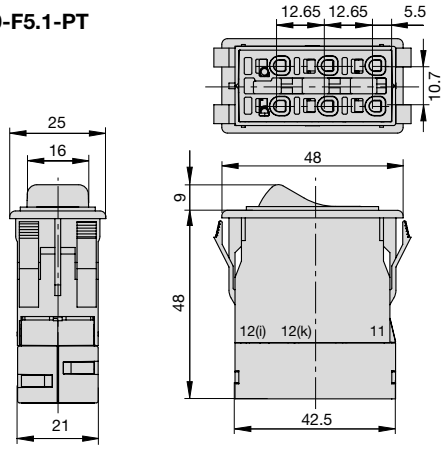

3120-F5.3

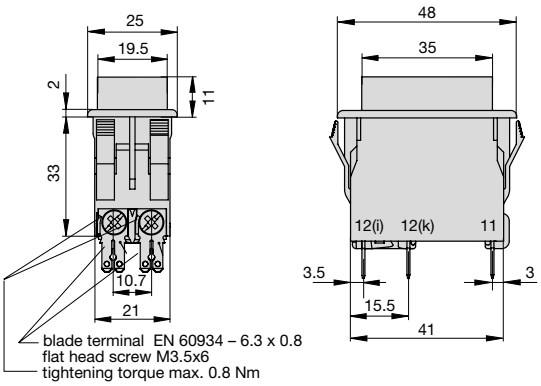

3120-F5.4

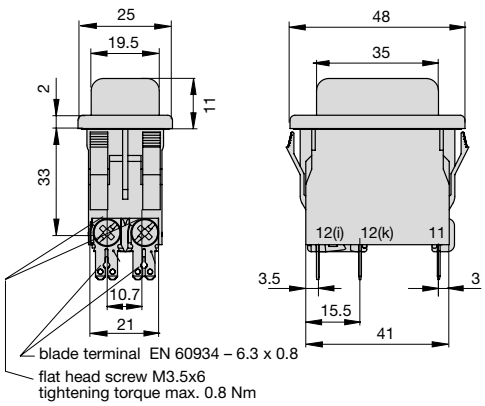

1

Dimensions

Style F7.R

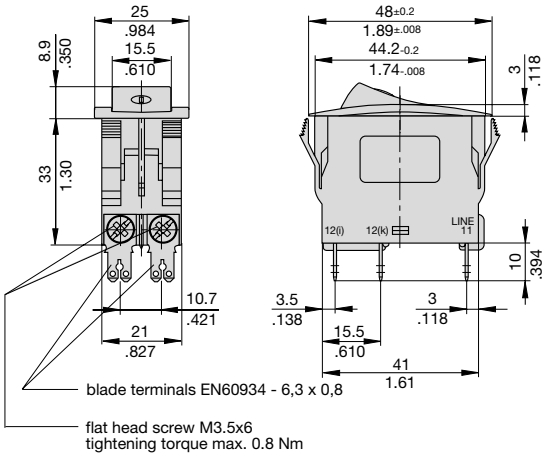

3120-F7.R-PT

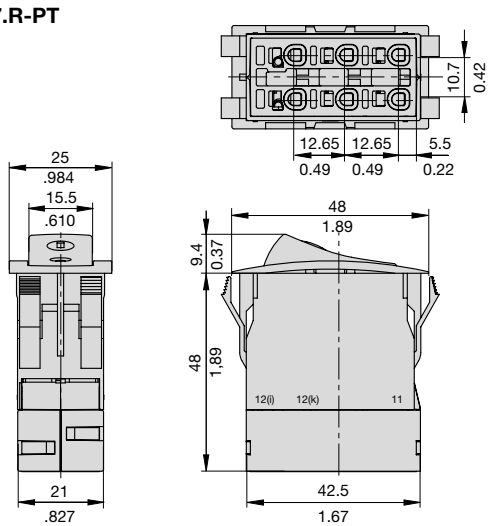

Style F7.T

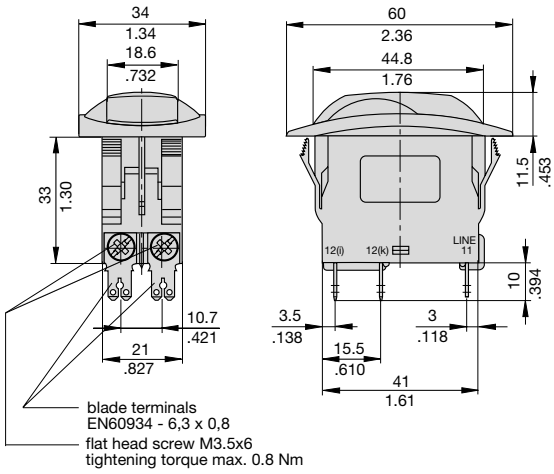

Cut-out dimensions

3120-F2...

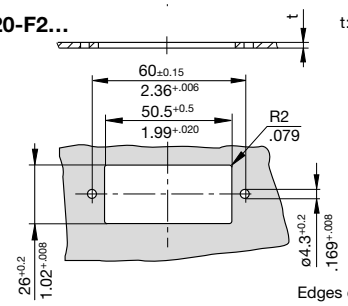

t: metal min. 2 mm (.079 in.)
plastic min. 3 mm (.118 in.)

Edges of working parts: ISO 13715

Cut-out for mounting style -F3
with rocker and push button

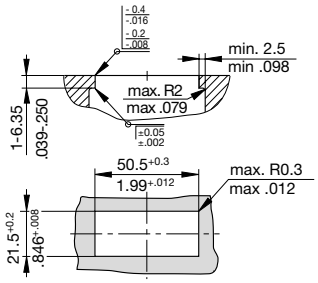

Cut-out for mounting style -F5/-F7
with rocker

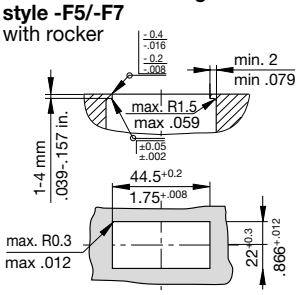

Edges of working parts: ISO 13715

Cable cross sections PT terminals

cable	cross section with direct push-in wiring
rigid	1…4 mm² (stripping length: 10 mm)
flexible with wire end ferrule (with or without plastic sleeve)	0.5…2.5 mm²
cable	**cross section when opening the push-in terminals**
rigid	0.5…4 mm² (stripping length: 10 mm)
flexible without wire end ferrule	0.5…2.5 mm²

Installation drawing

3120 with blade terminals

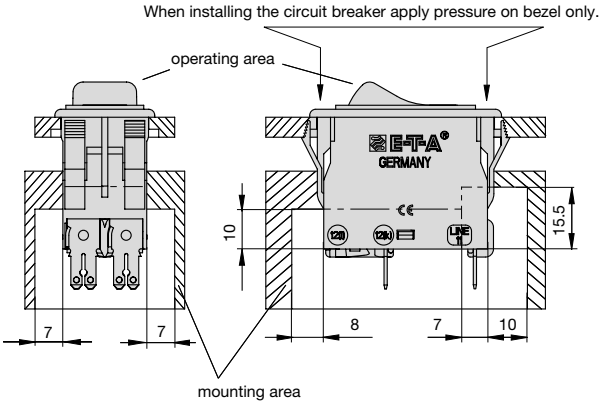

3120 with push-in terminals

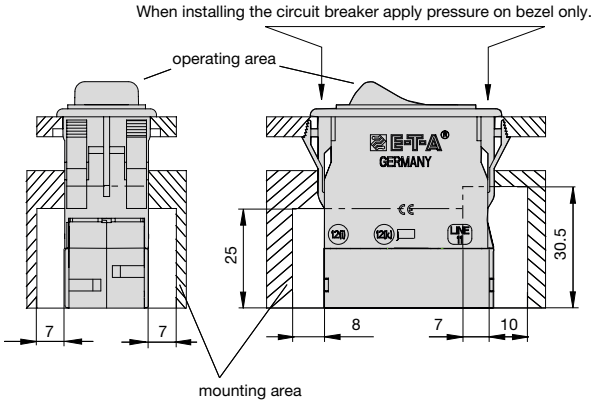

Terminal types

3120-F521-G7

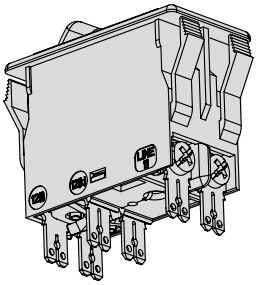

3120-F551-G7

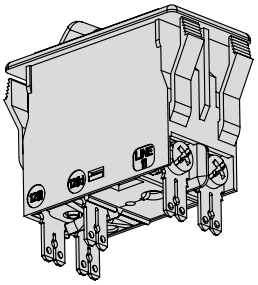

3120-F521-N7

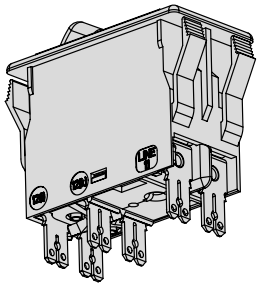

3120-F551-N7

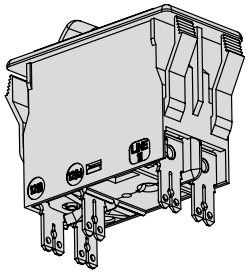

3120-F521-H7

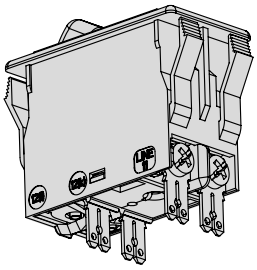

3120-F551-H7

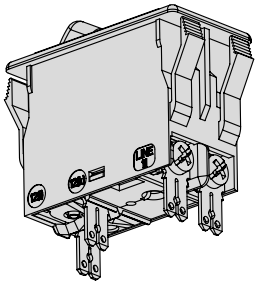

3120-F521-P7

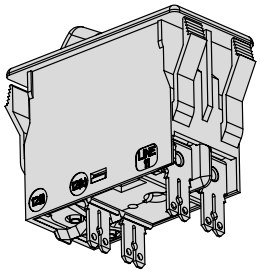

3120-F551-P7

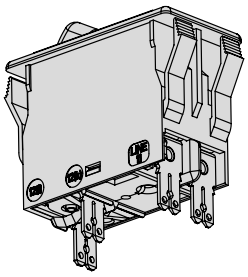

Accessories

Insulated cover
Y 303 068 01

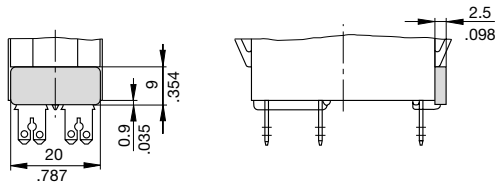

Terminal adapter
Y 303 862 01

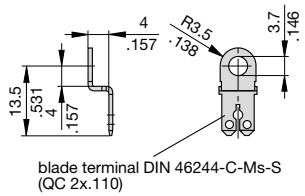

Blanking piece in -F3 frame
Y 303 885 31

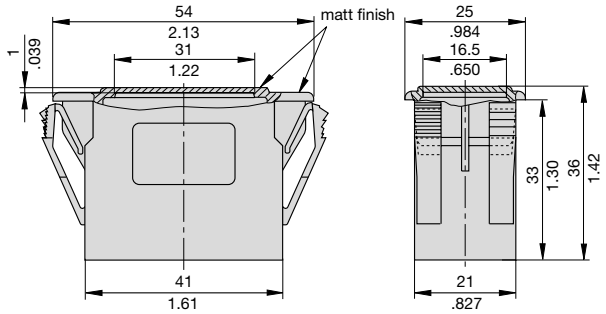

Rear terminal shroud black (IP64)
Y 304 275 01

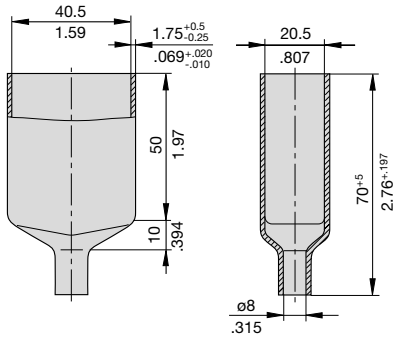

Water splash cover, transparent (IP66)
for mounting style -F2..
X 221 619 01

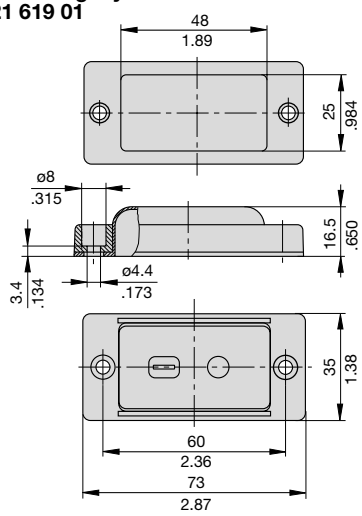

Mounting of
X221 619 01

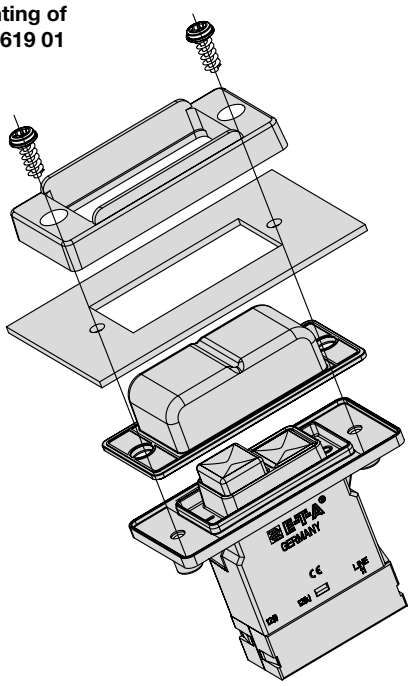

All dimensions without tolerances are for reference only. E-T-A reserves the right change specifications at any time in the interest of improved design, performance and cost effectiveness, the right to make changes in these specifications without notice is reserved. Product markings may not be exactly as the ordering codes. Errors and omissions excepted.

Accessories

Plug-in connector
Y 31214001
Connecting cables can be pre-wired. Two retaining clips ensure a tight fit.

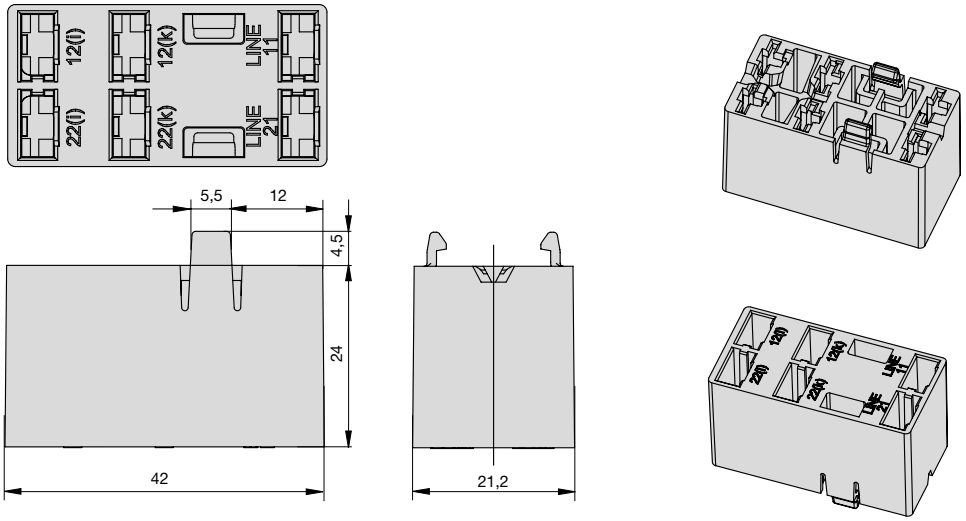

Benefits:
- Reduced installation time and costs for final assembly
- Quick replacement of devices

Note:
Delivery without receptacles.
Dimensions of receptacles (width 6.3 mm) are in accordance with DIN 46340 part 3, shape A.
Examples of suitable receptacles: Stocko RSB 7916 F6,3-1 / Klaucke type 2730 / Vogt type 3832d.67 / TE FASTON Terminals 250 Series / Delphi Packard 58 Series

Plug-in connector mounted on circuit breaker:

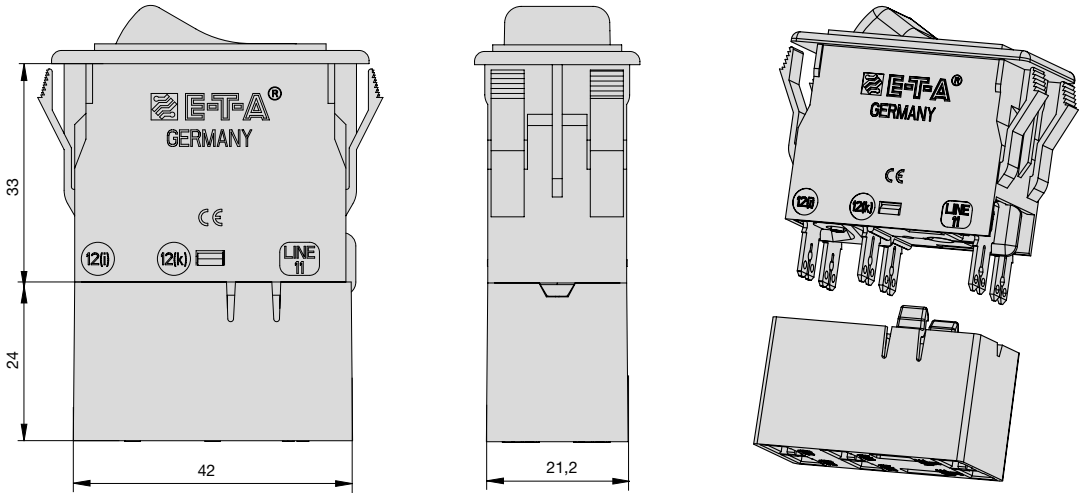

Description - Appliance inlet module X3120-A/-B

The appliance inlet module X3120 with circuit breaker type 3120-F5/-F7/-F8 combines up to four functions within a single component: A C14/C20 appliance inlet, a rocker-actuated or push button switch and resettable overcurrent protection and a filter. Screw-type mounting from the front or from the rear.

Typical applications

Electrical medical apparatus, laboratory equipment, professional audio equipment and office machines.

Approvals

X3120-A – C14 inlet			
Authority	**Standard**	**Voltage ratings**	**Max. current**
ENEC	IEC/EN 60320-1	AC 240 V	10 A
UL/CSA	UL 498	AC 250 V	15 A
CQC	CCC	AC 250 V	10 A

Approvals X3120-A – filter
Design coresponding to UL 1283, CSA 22.2 No. 8 1986, IEC/EN 60939

X3120-B – C20 inlet			
Authority	**Standard**	**Voltage ratings**	**Max. current**
ENEC	IEC/EN 60320-1	AC 240 V	16 A
UL/CSA	UL 498	AC 240 V	20 A

Selection current rating of the filter

Current rating circuit breaker	Minimum current rating of the filter
0,1...1 A	1 A
1,2...3 A	3 A
3,5...6 A	6 A
7...8A	8 A
9...10 A	10 A
12 A	12 A
14...15 A	15 A

Circuit breaker type 3120 with thermal release protects the filter in case of overloads.

For the protection of the filter in the event of higher overcurrents we recommend circuit breaker type 3120 with thermal-magnetic release (3120...M1...).

Further technical information upon request.

X3120-A X3120-B

Order numbering code

Type No.
X3120 Appliance inlet module for circuit breaker type 3120
- **Module**
  - **A** appliance inlet C14 (with filter)
  - **B** appliance inlet C20 (without filter)
- **Mounting**
  - **04** screw-type mounting
- **Filter**
  - **00** without filter
  - **01** general performance IEC inlet filter
  - **03** general performance IEC inlet filter, medical version
  - **06** high performance IEC inlet filter, medical version
- **Filter current rating**
  - **00** without filter
  - **01** 1 A
  - **03** 3 A
  - **06** 6 A
  - **08** 8 A
  - **10** 10 A
  - **12** 12 A
  - **15** 15 A
- **Version**
  - **01** not wired; mounting position 3120: OFF position to connector
  - **11** wired; mounting position 3120: OFF position to connector
- **Assembly status**
  - **M** module supplied with circuit breaker 3120 and filter (module A) fitted

X3120- B 04 00 00 01 M ordering example

All dimensions without tolerances are for reference only. In the interest of improved design, performance and cost effectiveness the right to make changes in these specifications without notice is reserved. Product markings may not be exactly as the ordering codes. Errors and omissions excepted.

Technical Data (type X3120-B, without filter)

Rated voltage	AC 240 V
Current rating (inlet)	16 A (IEC) 20 A (UL/CSA)
Ambient temperature	-25°C ...+60°C
Number of poles	L, N + earth
Protection class:	I
Mounting method:	screw-type mounting (front or rear)
Connection:	blade terminals DIN 46244 6.3 mm x 0.8 mm
Housing material:	thermoplastics, black UL94V-0
Appliance inlet:	C20 according to IEC/EN 60320-1, UL498
Mains switch:	Circuit breaker 3120-F5/-F7/-F8 (3120-F8 with push button actuation: technical data upon request)

Technical Data (type X3120-A with filter)

Rated voltage	AC 250 V
Current rating (inlet)	10 A (IEC) 15 A (UL/CSA)
Current rating (filter)	1 A, 3 A, 6 A, 8 A, 10 A, 12 A, 15 A
Ambient temperature	-25°C ...+60°C
Number of poles	L, N + earth
Protection class:	I
Mounting method:	screw-type mounting (front or rear)
Connection:	blade terminals DIN 46244 6.3 mm x 0.8 mm
Housing material:	thermoplastics, black UL94V-0
Appliance inlet:	C14 according to IEC/EN 60320-1, UL498
Mains switch:	Circuit breaker 3120-F5/-F7/-F8 (3120-F8 with push button actuation: technical data upon request)

1

Dimensions (type X3120-B)

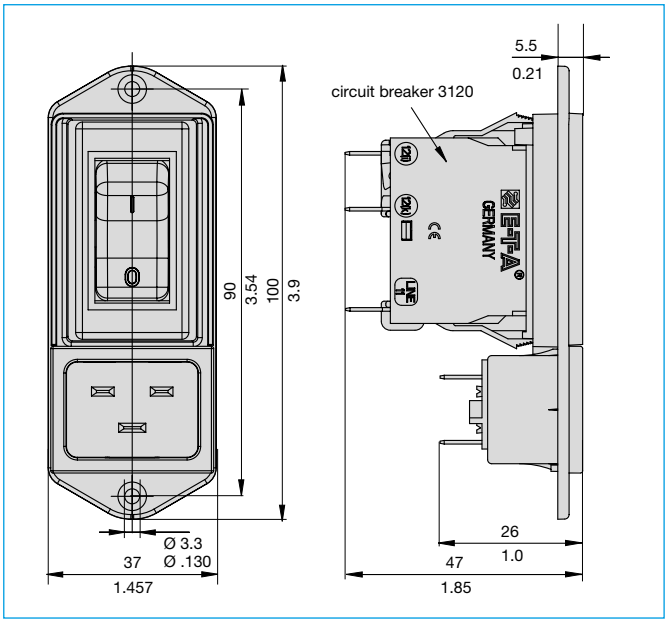

Dimensions (type X3120-A)

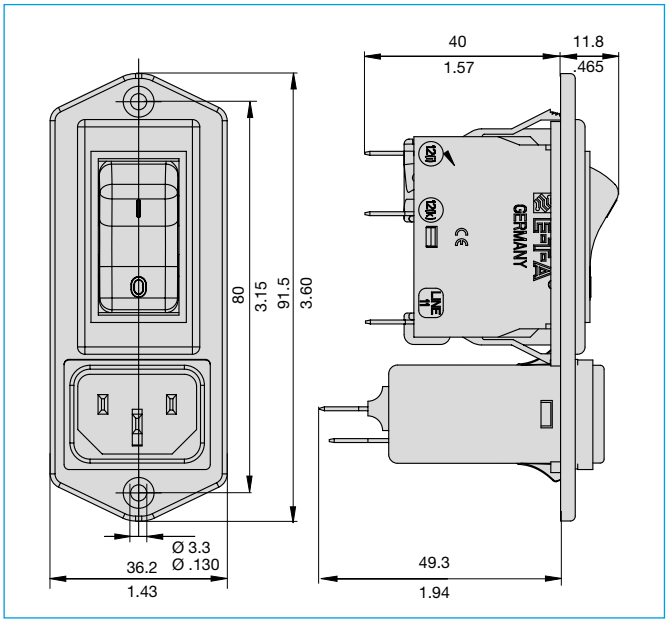

Cut-out dimensions (type X3120-B)

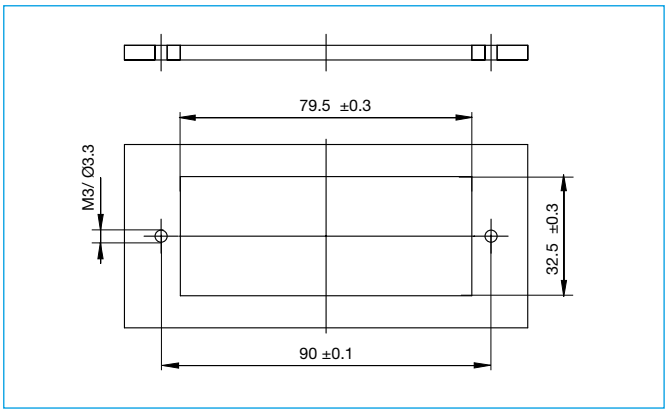

Cut-out dimensions (type X3120-A)

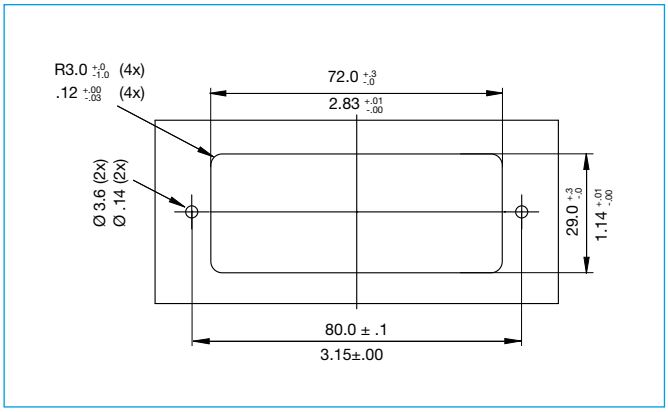

Electrical schematics X3120-A

X3120-A0401
General performance filter

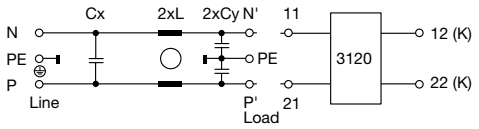

X3120-A0403 und X3120-A0406
Medical version

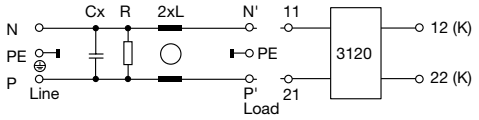

1

X3120-A0401 and X3120-A0403 - General performance filter

Typical filter attenuation: Per CISPR 17
A = 50 Ω / 50 Ω sym; B = 50 Ω / 50 Ω asym; C = 0.1 Ω / 100 Ω sym; D = 100 Ω / 0.1 Ω sym

1 and 3 A types

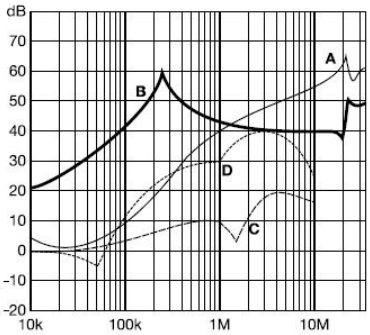

6 to 10 A types

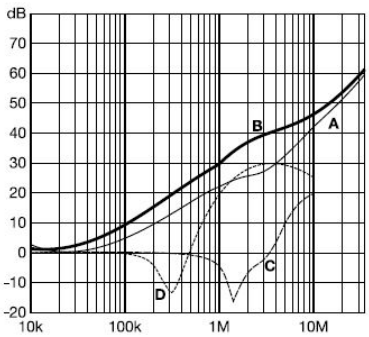

12 and 15 A types

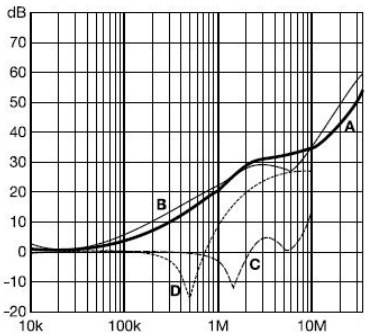

X3120-A0406 - High performance filter

Typical filter attenuation: Per CISPR 17
A = 50 Ω / 50 Ω sym; B = 50 Ω / 50 Ω asym; C = 0.1 Ω / 100 Ω sym; D = 100 Ω / 0.1 Ω sym

1 and 3 A types

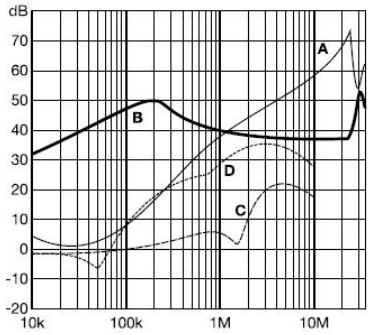

6 to 10 A types

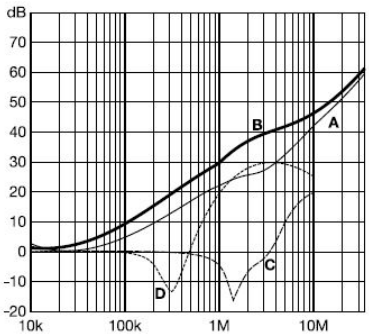

12 and 15 A types

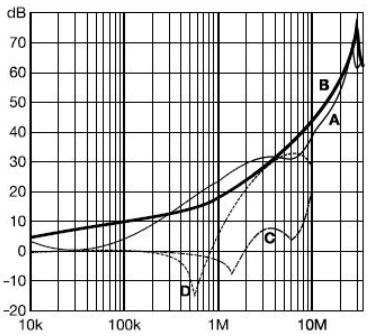

Filter selection table

Filter	Rated current 50°C (25°C) A	Leakage current 250VAC/50 Hz µA	Inductance L mH	Capacitance Cx µF	Capacitance Cy nF	Resistance R kΩ
X3120-A040101..M	1 (1.2)	373	12	0.1	2.2	
X3120-A040103..M	3 (3.5)	373	2.5	0.1	2.2	
X3120-A040106..M	6 (7.2)	373	0.78	0.1	2.2	
X3120-A040108..M	8 (10.6)	373	0.5	0.1	2.2	
X3120-A040110..M	10 (11.6)	373	0.225	0.1	2.2	
X3120-A040112..M	12 (12)	373	0.11	0.1	2.2	
X3120-A040115..M	15 (15)	373	0.075	0.1	2.2	
X3120-A040301..M	1 (1.2)	2	12	0.1		1000
X3120-A040303..M	3 (3.5)	2	2.5	0.1		1000
X3120-A040306..M	6 (7.2)	2	0.78	0.1		1000
X3120-A040308..M	8 (10.6)	2	0.5	0.1		1000
X3120-A040310..M	10 (11.6)	2	0.225	0.1		1000
X3120-A040312..M	12 (12)	2	0.11	0.1		1000
X3120-A040315..M	15 (15)	2	0.075	0.1		1000
X3120-A040601..M	1 (1.2)	2	59.53	0.1		1000
X3120-A040603..M	3 (3.5)	2	13.45	0.1		1000
X3120-A040606..M	6 (7.2)	2	4.1	0.1		1000
X3120-A040608..M	8 (10.6)	2	2.3	0.1		1000
X3120-A040610..M	10 (11.6)	2	1.02	0.1		1000
X3120-A040612..M	12 (12)	2	0.58	0.1		1000
X3120-A040615..M	15 (15)	2	0.4	0.1		1000

Description undervoltage release module X3120-U

Add-on module for circuit breaker type 3120. The undervoltage release module trips the 3120 circuit breaker/switch combination in the event of a voltage drop or power failure. When the voltage is restored, the 3120 must be reset to reconnect the load, thereby avoiding the safety hazards associated with automatic re-start of machinery.
Note: Basic unit 3120-...-H7 or -G7 requires screw terminals. Not possible in combination with PT terminals.

1

Typical applications

All machines and devices where automatic re-start after restoration of power could be dangerous, e.g. drilling machines, electric saws, sausage slicers etc.

Order numbering code

Type No.
X3120 module for type 3120
Module
U undervoltage release module
Design
00 standard (without separate connections)
01 1 blade terminals 2.8x0.8
02 2 blade terminals 2.8x0.8
Rated voltage
00 AC 230/240 V 50/60 Hz
01 AC 120 V 50/60 Hz
Assembly status
M module mounted to circuit breaker 3120

X3120- U 00 00 M ordering example

Dimensions

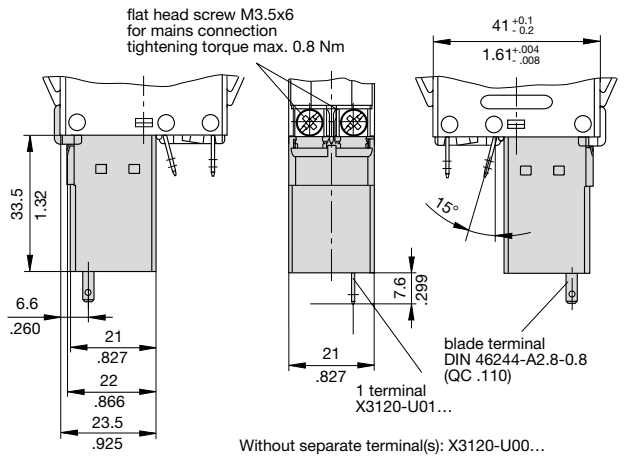

Schematic diagrams

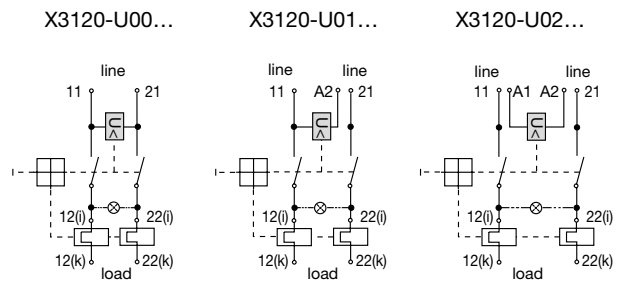

Technical data

Voltage ratings	AC 100 V; 120 V; 230/240 V (50/60 Hz); DC 24 V
Voltage tolerances	+ 10 % / - 15 %
Typical life	20,000 cycles
Current consumption	approx. 2.5 mA
Release values	$0.2 \times U_N < U < 0.7 \times U_N$ (at a rated voltage of AC 100 V the device can trip at 70 V and must trip at 20 V)
Release delay	< 20 ms
Latch-in values	≥ 85 % U_N
Ambient temperature	-30 … 60 °C
Vibration	8 g (57-500 Hz), ± 0.61 mm (10-57 Hz) test to IEC 60068-2-6, test Fc 10 frequency cycles/axis
Shock	30 g (11 ms) test to IEC 60068-2-27, test Ea
Corrosion	48 hours at 5 % salt mist, test to IEC 60068-2-11, test Ka
Humidity	240 hrs in 95 % RH test to IEC 60068-2-78, test Cab
Mass	approx. 53 g (including base unit)

All dimensions without tolerances are for reference only. E-T-A reserves the right change specifications at any time in the interest of improved design, performance and cost effectiveness, the right to make changes in these specifications without notice is reserved. Product markings may not be exactly as the ordering codes. Errors and omissions excepted.

Description auxiliary contact module X3120-S

Add-on module for circuit breaker type 3120-F. The auxiliary contact module has a change-over contact as signal contact and is operated with actuation of the CBE. Not possible in combination with PT terminals.

Typical applications

Status monitoring of CBE and/or the connected loads.

Order numbering code

Type No.
X3120 module for types 3120 and 3140

Module
S auxiliary contact module

Contact configuration
0 change-over contact

Terminal design
1 blade terminals 2.8 x 0.5 (QC .110), silver-plated

Contact rating

	AC voltage		DC voltage	
	rated voltage	rated current	rated voltage	rated current
A	10 V - 250 V	0.1...4 A	12 V	0.1...4 A
			24 V	0.1...4 A
			60 V	0.1...1 A
			110 V	0.1...0.5 A
			220 V	0.1...0.25 A
B	5 V - 250 V	5 ...100 mA	5 V - 250 V	5...100 mA

Assembly status
M module mounted to circuit breaker 3120

X3120- S 0 1 A M ordering example

* without approval mark

Dimensions

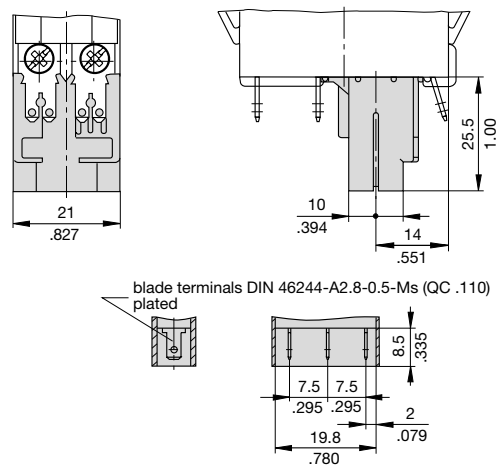

Schematic diagram

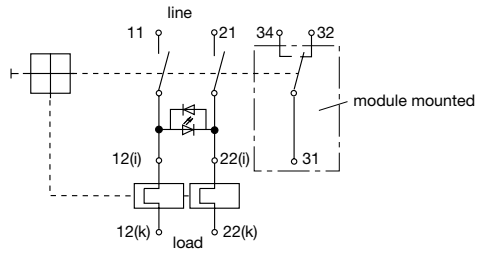

Technical data

Rated voltage	AC 250 V, DC 220 V
Current ratings	0.1...4 A / 5...100 mA
Typical life	50,000 cycles
Ambient temperature	-30…60 °C
Dielectric strength	
between main and auxiliary circuit	test voltage AC 3,000 V
Insulation resistance	> 100 MOhm (DC 500 V)
Vibration	6 g (57-500 Hz), ± 0.46 mm (10-57 Hz) test to IEC 60068-2-6, test Fc 10 frequency cycles/axis
Shock	15 g (11 ms) test to IEC 60068-2-27, test Ea
Corrosion	96 hours at 5 % salt mist, test to IEC 60068-2-11, test Ka
Humidity	240 hrs in 95 % RH test to IEC 60068-2-78, test Cab
Mass	approx. 38 g (including base unit)

All dimensions without tolerances are for reference only. E-T-A reserves the right change specifications at any time in the interest of improved design, performance and cost effectiveness, the right to make changes in these specifications without notice is reserved. Product markings may not be exactly as the ordering codes. Errors and omissions excepted.

Description remote trip module X3120-M

A module which adds remote trip capability to all versions of type 3120-F. A voltage applied across the coil, by means of an external sensor for example, will cause disconnection of the main switch/ circuit breaker mechanism.
Not possible in combination with PT terminals.

Typical applications

Electrical remote trip of safety systems.

1

Order numbering code

Type No.
X3120 module for type 3120
Module
M magnetic relay trip module
Style
2 magnetic remote trip coil
Terminal design
P7 blade terminals DIN 46244-A6.3-0.8
Assembly status
M module mounted to circuit breaker 3120
Rated voltage
AC 120, 230 V
DC 12, 24 V

X3120- M 2 P7 M -12 V ordering example

Standard voltage ratings and typical internal resistance values

voltage rating	internal internal resistance (Ω)	voltage rating	internal internal resistance (Ω)
DC 12 V	0.78	AC 120 V	71.0
DC 24 V	3.3	AC 230 V	312

Dimensions

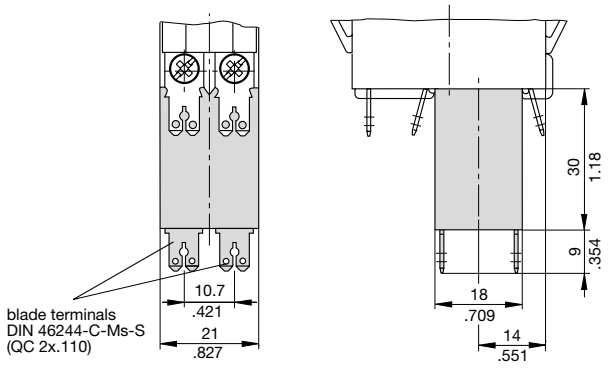

Schematic diagram

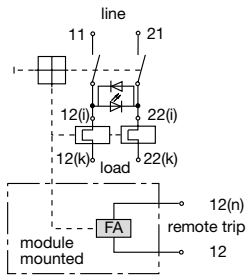

Technical data

Voltage ratings	AC 120...230 V; DC 12...24 V
Power consumption	approx. 200 Watt
Pulse operation	20 ms < t_{ON} < 100 ms / t_{OFF} > 10 sec
Trip time	< 20 ms
Typical life	50,000 operations at U_N
Ambient temperature	-30…60 °C
Dielectric strength	
between main and trip current circuit	test voltage AC 3,000 V
Insulation resistance	> 100 MOhm (DC 500 V)
Vibration	8 g (57-500 Hz), ± 0.61 mm (10-57 Hz) test to IEC 60068-2-6, test Fc 10 frequency cycles/axis
Shock	30 g (11 ms) test to IEC 60068-2-27, test Ea
Corrosion	96 hours at 5 % salt mist, test to IEC 60068-2-11, test Ka
Humidity	240 hrs in 95 % RH test to IEC 60068-2-78, test Cab
Mass	approx. 53 g (including base unit)

All dimensions without tolerances are for reference only. E-T-A reserves the right change specifications at any time in the interest of improved design, performance and cost effectiveness, the right to make changes in these specifications without notice is reserved. Product markings may not be exactly as the ordering codes. Errors and omissions excepted.

Общество с ограниченной ответственностью «МосЧип» ИНН 7719860671 / КПП 771901001
Адрес: 105318, г.Москва, ул.Щербаковская д.3, офис 1107

Данный компонент на территории Российской Федерации

Вы можете приобрести в компании MosChip.

Для оперативного оформления запроса Вам необходимо перейти по данной ссылке:

http://moschip.ru/get-element

Вы можете разместить у нас заказ для любого Вашего проекта, будь то серийное производство или разработка единичного прибора.

В нашем ассортименте представлены ведущие мировые производители активных и пассивных электронных компонентов.

Нашей специализацией является поставка электронной компонентной базы двойного назначения, продукции таких производителей как XILINX, Intel (ex.ALTERA), Vicor, Microchip, Texas Instruments, Analog Devices, Mini-Circuits, Amphenol, Glenair.

Сотрудничество с глобальными дистрибьюторами электронных компонентов, предоставляет возможность заказывать и получать с международных складов практически любой перечень компонентов в оптимальные для Вас сроки.

На всех этапах разработки и производства наши партнеры могут получить квалифицированную поддержку опытных инженеров.

Система менеджмента качества компании отвечает требованиям в соответствии с ГОСТ Р ИСО 9001, ГОСТ РВ 0015-002 и ЭС РД 009

Офис по работе с юридическими лицами:

105318, г.Москва, ул.Щербаковская д.3, офис 1107, 1118, ДЦ «Щербаковский»

Телефон: +7 495 668-12-70 (многоканальный)

Факс: +7 495 668-12-70 (доб.304)

E-mail: info@moschip.ru

Skype отдела продаж:
moschip.ru
moschip.ru_4
moschip.ru_6
moschip.ru_9