# Thermal Circuit Breaker 3120-F...

## Description

The 3120 circuit breaker/switch combination is an ON/OFF switch with integral overcurrent protection (S-type TO CBE to EN/IEC 60934). The trip element is a bimetal. Type 3120 is ideally suited for overload protection of motors, pumps, transformers and cables.
The 3120 circuit breaker is also available as a switch-only version in accordance with the IEC/EN 61058 (see data sheet switch 3120-F-..Q1).

**Product characteristics:**
- rocker or push button actuation
- single pole and double pole versions
- reliable switching behaviour (positively trip-free)
- convenient snap-in mounting
- international approvals

**Options and add-on modules:**
- illumination
- water splash protection
- auxiliary contacts
- under voltage trip
- remote trip
- magnetic trip
- push-in terminals
- appliance inlet module

## Typical applications

Medical and laboratory equipment, apparatus and machine construction, professional tools, household and garden appliances, offices machines, audio equipment, machine tools

## Current ratings and internal resistance values

| Current rating (A) | Internal resistance per pole (Ω) | Current rating (A) | Internal resistance per pole (Ω) |
|---|---|---|---|
| 0.1 | 94 | 4 | 0.0435 |
| 0.2 | 24 | 4.5 | 0.0435 |
| 0.3 | 12 | 5 | 0.0325 |
| 0.4 | 5.30 | 6 | 0.0215 |
| 0.5 | 4.20 | 7 | 0.0165 |
| 0.6 | 2.90 | 8 | 0.0165 |
| 0.8 | 1.50 | 10 | < 0.02 |
| 1 | 0.9 | 12 | < 0.02 |
| 1.2 | 0.80 | 14 | < 0.02 |
| 1.5 | 0.45 | 15 | < 0.02 |
| 2 | 0.27 | 16 | < 0.02 |
| 2.5 | 0.0785 | 18 | < 0.02 |
| 3 | 0.0595 | 20 | < 0.02 |
| 3.5 | 0.0565 | | |

## Current consumption of illumination

| Operating voltage | Current consumption | | |
|---|---|---|---|
| | Y | R | G |
| DC 12 V | 5.2 mA | 2 mA | 1.4 mA |
| DC 24 V | 4.5 mA | 2.2 mA | 1.6 mA |
| DC 48 V | 4.5 mA | 2 mA | 1.6 mA |
| AC 115 V | 2.8 mA | 1.1 mA | 1 mA |
| AC 230 V | 2.2 mA | 0.9 mA | 0.9 mA |

## Technical data

| For details please see | Technical information | |
|---|---|---|
| Rated voltage | AC 240 V, DC 50 V | |
| Current rating range | 0.1...20 A<br>(up to 30A upon request for single pole units) | |
| **Typical life 1-pole** | | |
| AC 240 V: 0.1...20 A | 30,000 operations at 1 x $I_N$, inductive | |
| DC 50 V: 0.1...4 A | 30,000 operations at 1 x $I_N$, inductive | |
| 4.5...16 A | 30,000 operations at 1 x $I_N$, resistive | |
| DC 28 V: 0.1...20 A | 30,000 operations at 1 x $I_N$, inductive | |
| **Typical life 2-pole** | | |
| AC 240 V: 0.1...16 A | 50,000 operations at 1 x $I_N$, inductive | |
| 17...20 A | 30,000 operations at 1 x $I_N$, inductive | |
| DC 50 V: 0.1...16 A | 50,000 operations at 1 x $I_N$, inductive | |
| 17...20 A | 50,000 operations at 1 x $I_N$, inductive | |
| Ambient temperature | -30 … 60 °C | |
| Insulation coordination (IEC 60664) | 2.5 kV /2 reinforced insulation at operating area | |
| **Dielectric strength** | | |
| Operating area<br>pole to pole (2-pole) | test voltage AC 3,000 V<br>test voltage AC 1,500 V | |
| Insulation resistance | > 100 MΩ (DC 500 V) | |
| Interrupting capacity $I_{cn}$ | 0.1...2 A | 10 x $I_N$ |
| | 2.5...20 A | 1-pole 150 A<br>2-pole 250 A |

Interrupting capacity (UL 1077)

| | $I_N$ | $U_N$ | $I_{nc}$ |
|---|---|---|---|
| 1-pole, 2- pole | 0.1...20 A | AC 250 V | 5000 A, C, 1 |
| 1-pole, 2- pole | 0.1...20 A | DC 50 V | 1000 A, C, 1 |

| | |
|---|---|
| Degree of protection (IEC 60529) | operating area IP40<br>terminal area IP00<br>with water splash cover IP54 or IP66 |
| Vibration | 8 g (57-500 Hz), ± 0.61 mm (10-57 Hz)<br>test to IEC 60068-2-6, test Fc<br>10 frequency cycles/axis |
| Shock | 30 g (11 ms)<br>test to IEC 60068-2-27, test Ea |
| Corrosion | 96 hours at 5 % salt mist,<br>test to IEC 60068-2-11, test Ka |
| Humidity | 240 hrs in 95 % RH<br>test to IEC 60068-2-78,<br>test Cab |
| Mass | approx. 33 g (2-pole)<br>approx. 27 g (1-pole)<br>approx. 42 g (2-pole with PT terminals) |

1

## Order numbering code

**Type No.**
**3120** thermal rocker-actuated circuit breaker

**Mounting method**
**F** flange mounting snap-in frame

**Size of frame**
**3** standard, to fit mounting cut-out 50.5 x 21.5 mm
**5** standard, to fit mounting cut-out 44.5 x 22 mm
**7** special style, to fit mounting cut-out 44.5 x 22 mm

**Number of poles**
**1** 1-pole, thermally protected
**2** 2-pole, thermally protected
**5** 2-pole, 1-pole thermally protected

**Mounting frame design (F3 & F5)**
**1** collar height 1 mm
**3** collar height 9 mm
**4** collar height 2 mm with water splash protection (IP54)

**Mounting frame design (F7)**
**R** black
**T** black with snap-on water splash cover

**Terminal configuration**
**PT** push-in terminals
**P7** blade terminals
**H7** as P7, terminals 11 and 21 with flat head screws M3.5 - standard for units with undervoltage release module
**N7** as P7, with additional shunt terminals 12(i) and 22(i)
**G7** as N7, terminals 11 and 21 with flat head screws M3.5

**Characteristic curve**
**T1** thermal trip

**Actuator style**
**W** rocker for frame size F3 & F5
**A** rocker for frame size F7

**Colour and illumination**
**01.** rocker black opaque
**02.** rocker white opaque
**04.** rocker red opaque
**14. R** rocker red translucent with LED illumination
**15. Y** rocker orange translucent with LED illumination
**19. G** rocker green translucent with LED illumination

**Marking for rocker style W**
**A D F Q X**

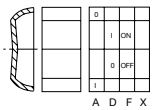


Q: 0 and 1 moulded in

**Marking for rocker style A**
**Q** »I« and »O« moulded in

**Illumination voltage range**
(= operating voltage)
**1** DC 12 V
**2** DC 24 V
**3** AC 115 V
**4** AC 230 V
**5** DC 48 V

**3120 -F 7 2 R - P7 T1 -A 14 QR 4**

**Current ratings**
**0.1...20 A**

**3120 -F 7 2 R - P7 T1 -A 14 QR 4 - 10 A** ordering example

## Order numbering code

**Type No.**
**3120** thermal circuit breaker with push button actuation

**Mounting**
**F** flange mounting snap-in frame

**Size**
**2** special frame for fitting splash cover
**3** mounting cut-out 50.5 x 21.5 mm (panel thickness 1-6.35 mm)

**Number of poles**
**1** 1-pole, thermally protected
**2** 2-pole, thermally protected
**5** 2-pole, 1-pole thermally protected

**Style**
**F** frame with 2 push buttons
**G** frame with one push button (reset only)

**Terminal configuration**
**PT** push-in terminals
**P7** blade terminals
**H7** as P7, terminals 11 and 21 with flat head screws M3.5 - standard for units with undervoltage release module
**N7** as P7, with additional shunt terminals 12(i) and 22(i)
**G7** as N7, terminals 11 and 21 with flat head screws M3.5

**Characteristic curve**
**T1** thermal trip

**Actuators / colour / illumination**
**D01X** 1 push button* black opaque
**D02X** 1 push button* white opaque
**D04X** 1 push button* red opaque
**D19XG** 1 push button* green translucent with LED illumination
**SGRX** 2 push buttons green/red opaque without illumination
**SGRXG** 2 push buttons green/red translucent with LED illumination

**Illumination voltage range**
(= operating voltage)
**1** DC 12 V
**2** DC 24 V
**3** AC 115 V
**4** AC 230 V
**5** DC 48 V

**Current ratings**
**0.1...20 A**

**3120- F 3 2 F - P7 T1- S GRXG 4-10 A** ordering example

*reset only

**Packaging unit:**
**20, 25, 35, 50 or 60 pcs, depending on the version**

## Preferred types

| preferred type F7 2-pole protected | preferred ratings (A) | | | | | | | | | | | | | |
|---|---|---|---|---|---|---|---|---|---|---|---|---|---|---|
| | 0.5 | 1 | 1.5 | 2 | 3 | 4 | 5 | 6 | 8 | 10 | 12 | 15 | 16 | 20 |
| 3120-F72R-P7T1-A14QR4- | x | x | x | x | x | x | x | x | x | x | x | x | x | x |
| **preferred type F3 1-pole protected** | 0.5 | 1 | 2 | 3 | 4 | 5 | 6 | 8 | 10 | 12 | 15 | 16 | 20 | |
| 3120-F311-P7T1-W02D- | | x | | | x | x | x | x | x | | x | | x | |
| **preferred type F3 2-pole protected** | 0.5 | 1 | 2 | 3 | 4 | 5 | 6 | 8 | 10 | 12 | 15 | 16 | 20 | |
| 3120-F321-P7T1-W01D- | x | x | x | x | x | x | x | x | x | x | x | x | x | |
| **preferred type F5 2-pole protected** | 0.5 | 1 | 2 | 3 | 4 | 5 | 6 | 8 | 10 | 12 | 15 | 16 | 20 | |
| 3120-F521-P7T1-W01D- | | x | x | x | x | x | x | x | x | x | x | x | x | |

## Approvals

| Approval authority | Standard | Rated voltage | Current rating range |
|---|---|---|---|
| VDE | IEC/EN 60934 | AC 240 V<br>DC 50 V<br>DC 50 V<br>DC 28 V | 0.1 A…20 A<br>0.1...20A (2-pole)<br>0.1...4 A (1-pole)<br>0.1 A…20 A |
| UL | UL 1077 | AC 250 V<br>DC 50 V<br>AC 250 V | 0,1 A…20 A<br>0,1 A…20 A<br>30 A (2 poles in parallel) |
| CSA | C22.2 No 235 | AC 250 V<br>DC 50 V<br>AC 250 V | 0,1 A…20 A<br>0,1 A…20 A<br>30 A (2 poles in parallel) |
| CQC | GB 17701 | AC 240 V<br>DC 50 V | 0.1 A…20 A<br>0.1 A…20 A |

## Schematic diagrams

**2-pole,**
**thermally protected on both poles**

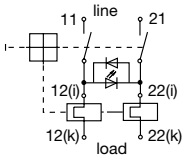


**2-pole,**
**thermally protected on one pole only**

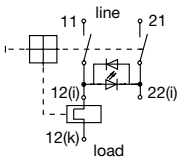


**1-pole,**
**thermally protected**

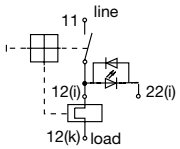


## Time/current characteristics

single or double pole load

**0.1…2 A**

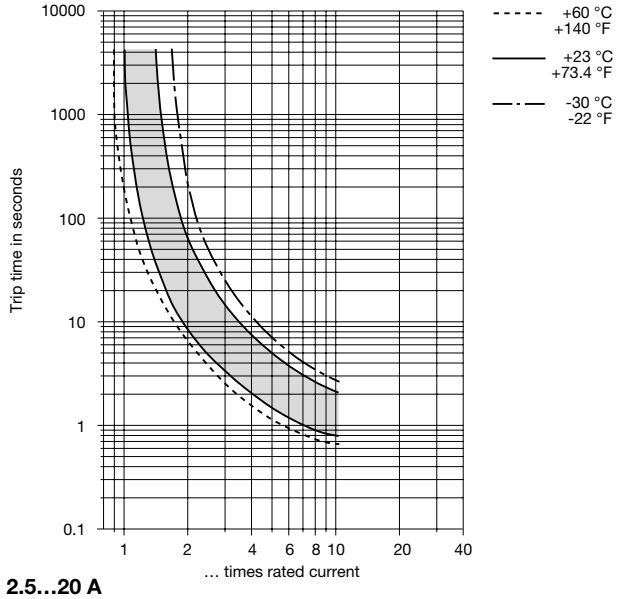


**2.5…20 A**

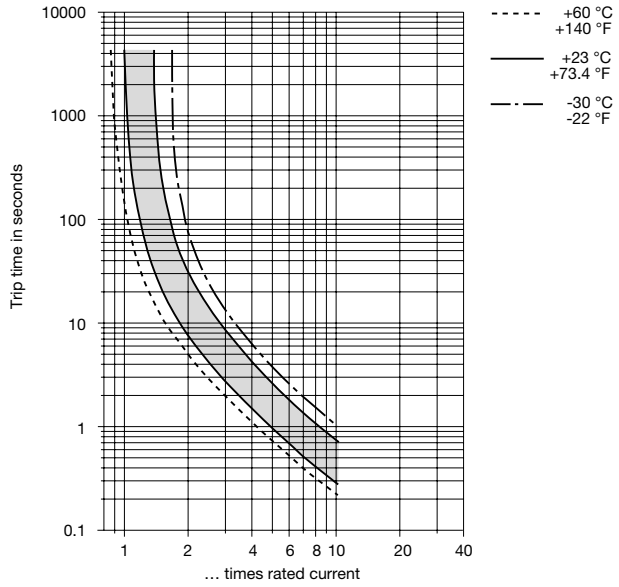


The time/current characteristic depends on the ambient temperature. In order to eliminate nuisance tripping, please multiply the current rating by a derating factor (see chapter Technical Information)

| ambient temperature [°C] | -30 | -20 | -10 | 0 | 23 | 40 | 50 | 60 |
|---|---|---|---|---|---|---|---|---|
| Temperature factor | 0.8 | 0.84 | 0.88 | 0.92 | 1 | 1.08 | 1.14 | 1.23 |

1

## Dimensions

### 3120-F2.F-...

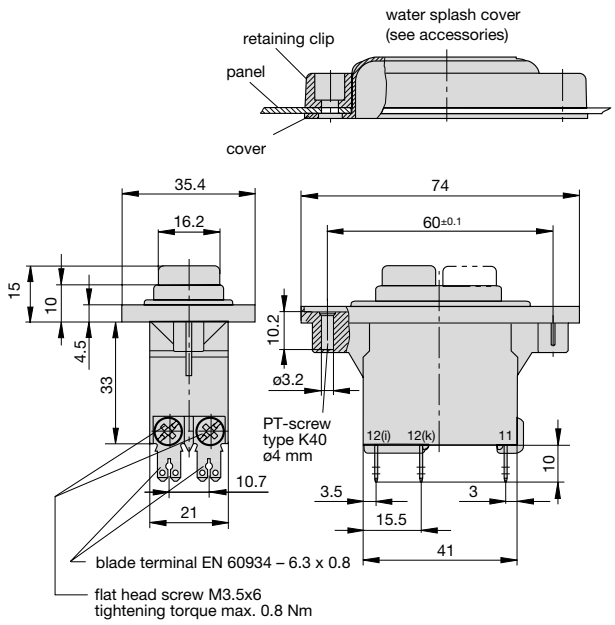


### 3120-F2.F-PT...

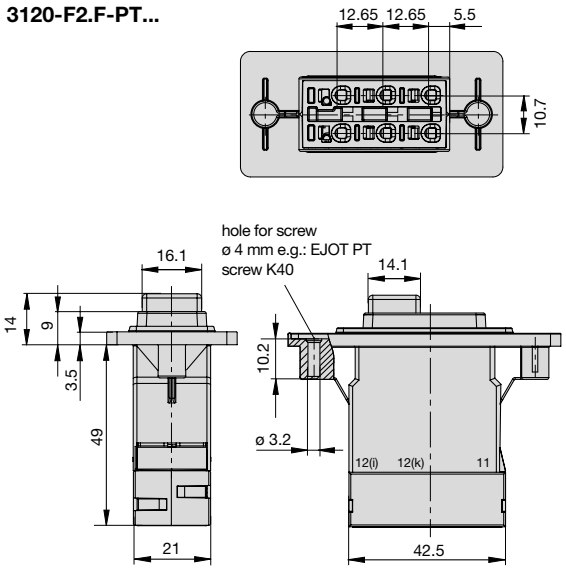


### 3120-F3.1

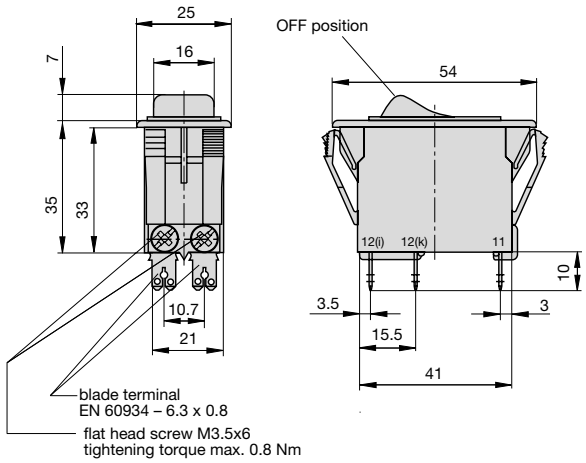


### 3120-F3.1-PT

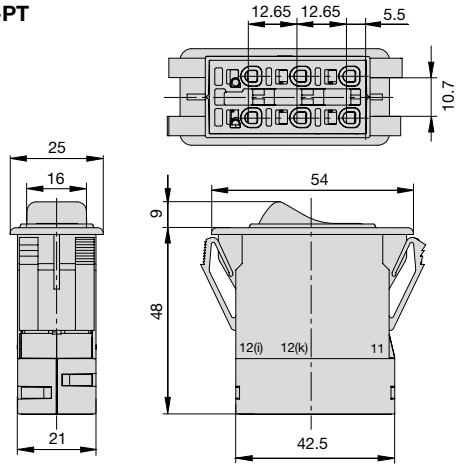


### 3120-F 3.3
collar height 9 mm

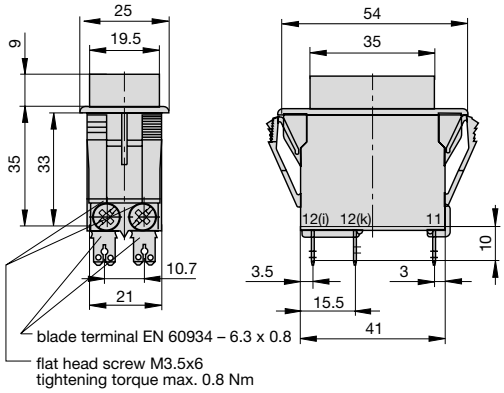


### 3120-F 3.4
with water splash protection (IP54)

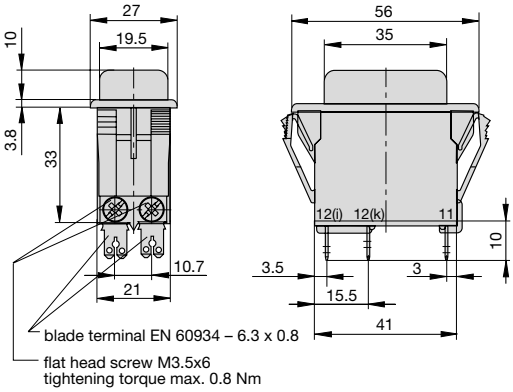

## Dimensions

### 3120-F3.F-...-S...

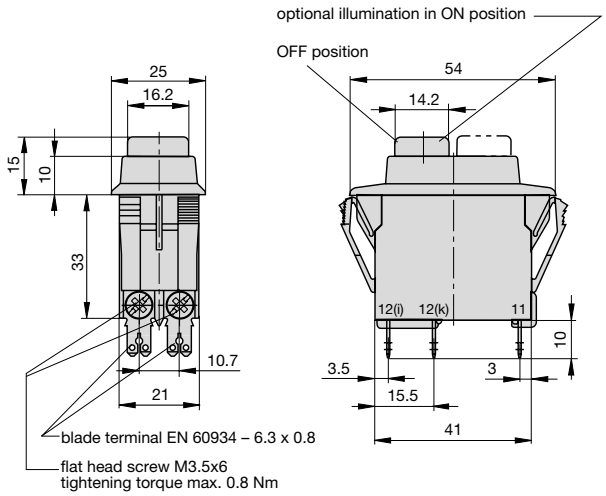


### 3120-F3.G-...-D...

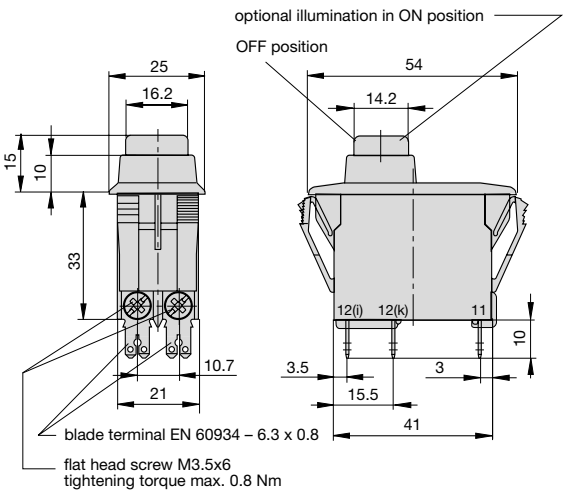


### 3120-F 5.1

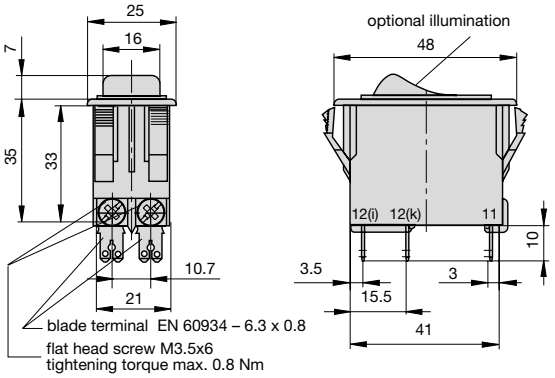


### 3120-F5.1-PT

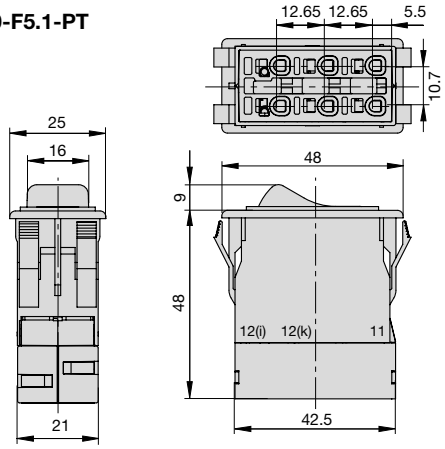


### 3120-F5.3

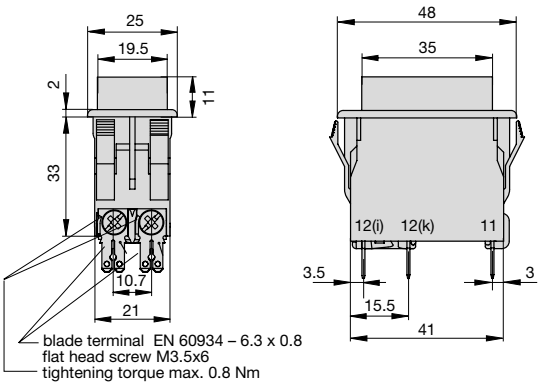


### 3120-F5.4

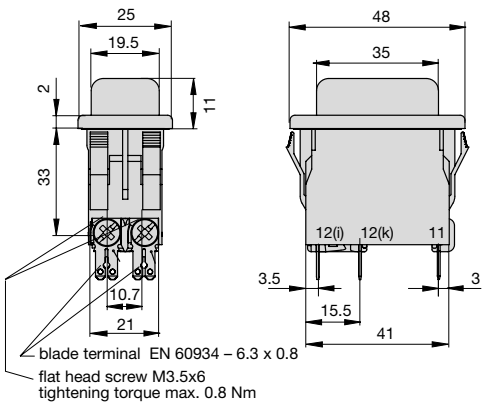

1

## Dimensions

### Style F7.R

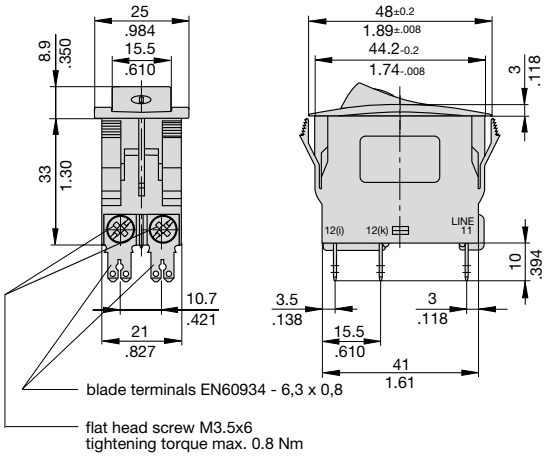


### 3120-F7.R-PT

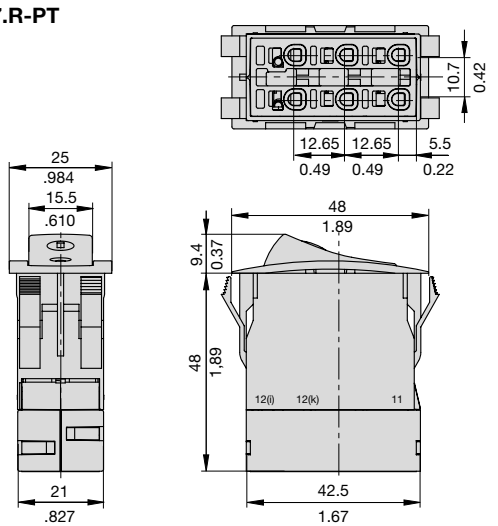


### Style F7.T

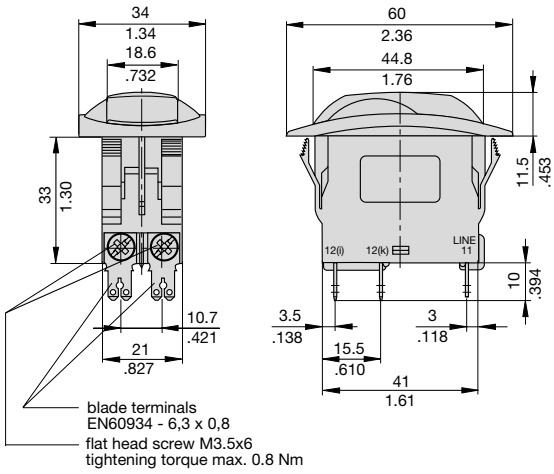


## Cut-out dimensions

### 3120-F2...

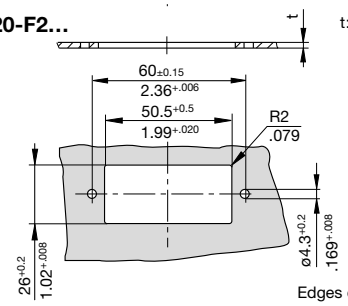


t: metal min. 2 mm (.079 in.)
plastic min. 3 mm (.118 in.)

Edges of working parts: ISO 13715

**Cut-out for mounting style -F3**
with rocker and push button

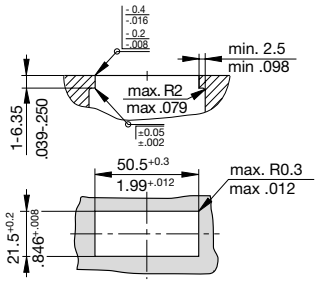


**Cut-out for mounting style -F5/-F7**
with rocker

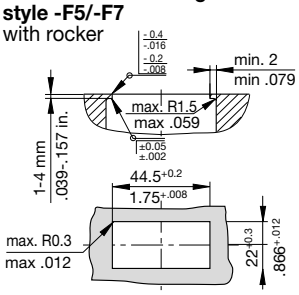


Edges of working parts: ISO 13715

## Cable cross sections PT terminals

| cable | cross section with direct push-in wiring |
|---|---|
| rigid | 1…4 mm² (stripping length: 10 mm) |
| flexible with wire end ferrule (with or without plastic sleeve) | 0.5…2.5 mm² |
| **cable** | **cross section when opening the push-in terminals** |
| rigid | 0.5…4 mm² (stripping length: 10 mm) |
| flexible without wire end ferrule | 0.5…2.5 mm² |

## Installation drawing

### 3120 with blade terminals

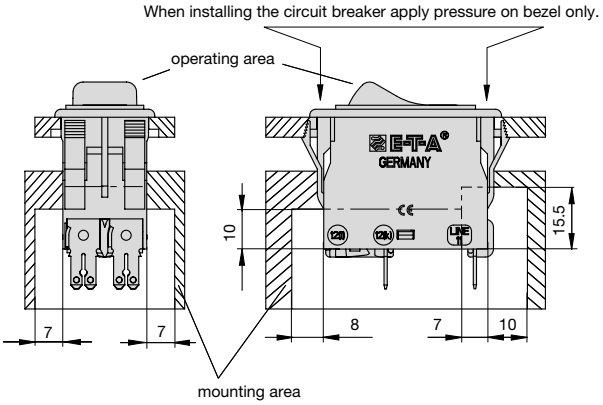


### 3120 with push-in terminals

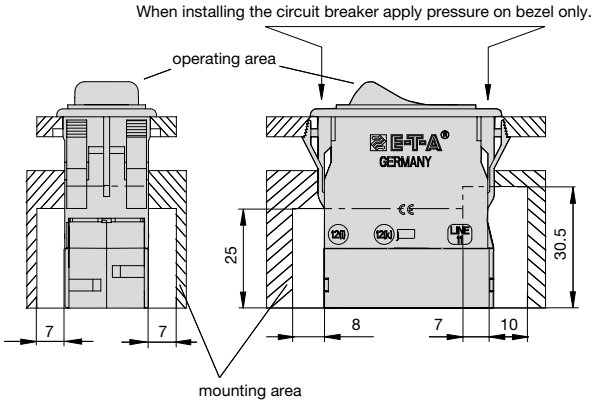


## Terminal types

**3120-F521-G7**

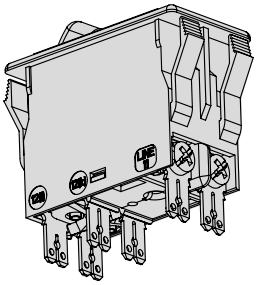

**3120-F551-G7**

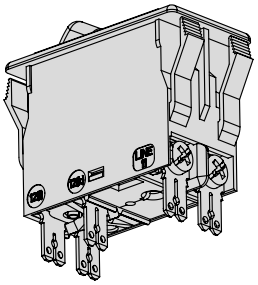

**3120-F521-N7**

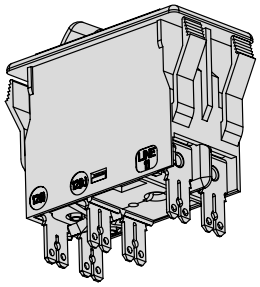

**3120-F551-N7**

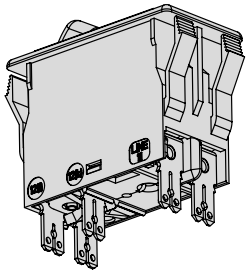

**3120-F521-H7**

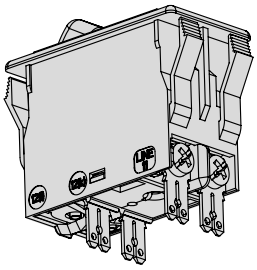

**3120-F551-H7**

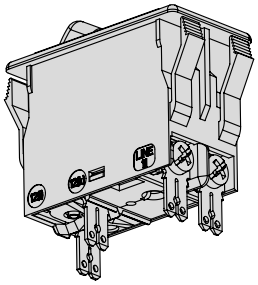

**3120-F521-P7**

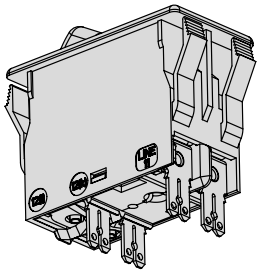

**3120-F551-P7**

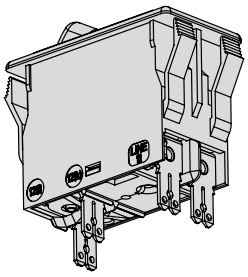

## Accessories

**Insulated cover**
**Y 303 068 01**

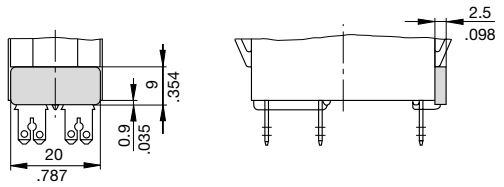


**Terminal adapter**
**Y 303 862 01**

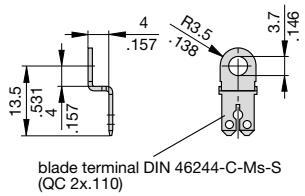


**Blanking piece in -F3 frame**
**Y 303 885 31**

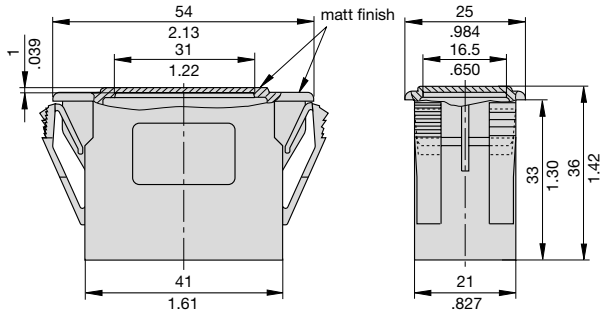


**Rear terminal shroud black** (IP64)
**Y 304 275 01**

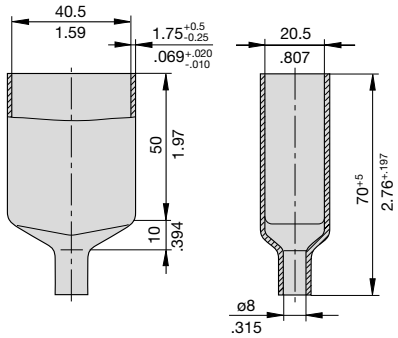


**Water splash cover, transparent** (IP66)
**for mounting style -F2..**
**X 221 619 01**

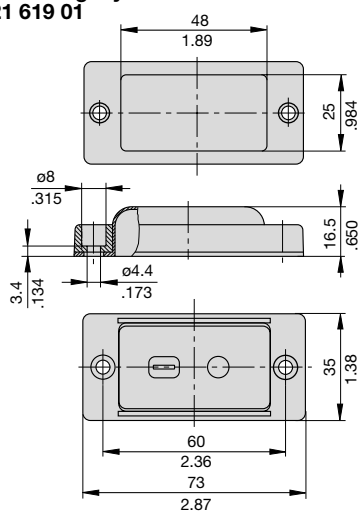


**Mounting of**
**X221 619 01**

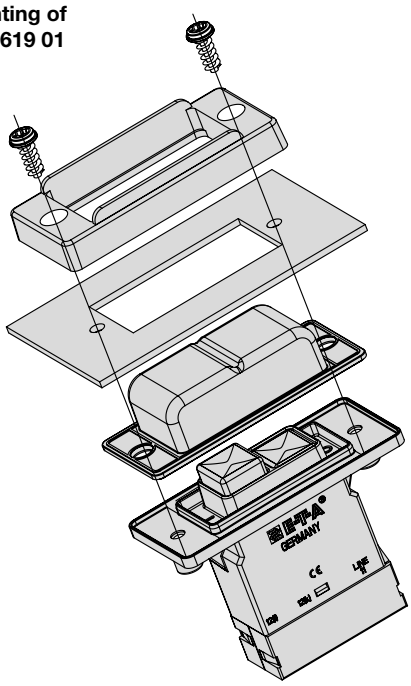


All dimensions without tolerances are for reference only. E-T-A reserves the right change specifications at any time in the interest of improved design, performance and cost effectiveness, the right to make changes in these specifications without notice is reserved. Product markings may not be exactly as the ordering codes. Errors and omissions excepted.

## Accessories

**Plug-in connector**
**Y 31214001**
Connecting cables can be pre-wired. Two retaining clips ensure a tight fit.

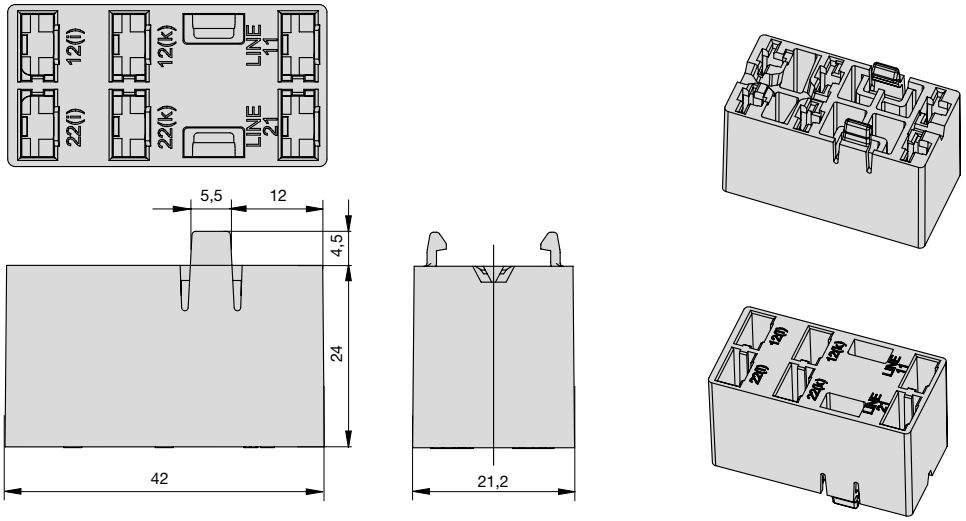


Benefits:
- Reduced installation time and costs for final assembly
- Quick replacement of devices

Note:
Delivery without receptacles.
Dimensions of receptacles (width 6.3 mm) are in accordance with DIN 46340 part 3, shape A.
Examples of suitable receptacles: Stocko RSB 7916 F6,3-1 / Klaucke type 2730 / Vogt type 3832d.67 / TE FASTON Terminals 250 Series / Delphi Packard 58 Series

Plug-in connector mounted on circuit breaker:

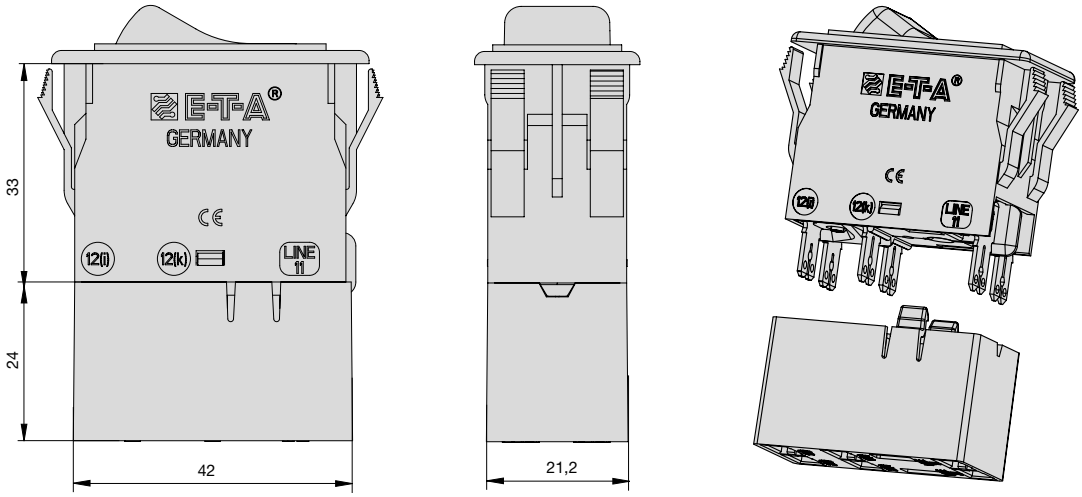

## Description - Appliance inlet module X3120-A/-B

The appliance inlet module X3120 with circuit breaker type 3120-F5/-F7/-F8 combines up to four functions within a single component: A C14/C20 appliance inlet, a rocker-actuated or push button switch and resettable overcurrent protection and a filter. Screw-type mounting from the front or from the rear.

## Typical applications

Electrical medical apparatus, laboratory equipment, professional audio equipment and office machines.



## Approvals

| X3120-A – C14 inlet | | | |
|---|---|---|---|
| **Authority** | **Standard** | **Voltage ratings** | **Max. current** |
| ENEC | IEC/EN 60320-1 | AC 240 V | 10 A |
| UL/CSA | UL 498 | AC 250 V | 15 A |
| CQC | CCC | AC 250 V | 10 A |

| Approvals X3120-A – filter |
|---|
| Design coresponding to UL 1283, CSA 22.2 No. 8 1986, IEC/EN 60939 |

| X3120-B – C20 inlet | | | |
|---|---|---|---|
| **Authority** | **Standard** | **Voltage ratings** | **Max. current** |
| ENEC | IEC/EN 60320-1 | AC 240 V | 16 A |
| UL/CSA | UL 498 | AC 240 V | 20 A |

## Selection current rating of the filter

| Current rating circuit breaker | Minimum current rating of the filter |
|---|---|
| 0,1...1 A | 1 A |
| 1,2...3 A | 3 A |
| 3,5...6 A | 6 A |
| 7...8A | 8 A |
| 9...10 A | 10 A |
| 12 A | 12 A |
| 14...15 A | 15 A |

Circuit breaker type 3120 with thermal release protects the filter in case of overloads.

For the protection of the filter in the event of higher overcurrents we recommend circuit breaker type 3120 with thermal-magnetic release (3120...M1...).

Further technical information upon request.

X3120-A X3120-B

## Order numbering code

**Type No.**
**X3120** Appliance inlet module for circuit breaker type 3120
- **Module**
  - **A** appliance inlet C14 (with filter)
  - **B** appliance inlet C20 (without filter)
- **Mounting**
  - **04** screw-type mounting
- **Filter**
  - **00** without filter
  - **01** general performance IEC inlet filter
  - **03** general performance IEC inlet filter, medical version
  - **06** high performance IEC inlet filter, medical version
- **Filter current rating**
  - **00** without filter
  - **01** 1 A
  - **03** 3 A
  - **06** 6 A
  - **08** 8 A
  - **10** 10 A
  - **12** 12 A
  - **15** 15 A
- **Version**
  - **01** not wired; mounting position 3120: OFF position to connector
  - **11** wired; mounting position 3120: OFF position to connector
- **Assembly status**
  - **M** module supplied with circuit breaker 3120 and filter (module A) fitted

**X3120- B 04 00 00 01 M** ordering example

All dimensions without tolerances are for reference only. In the interest of improved design, performance and cost effectiveness the right to make changes in these specifications without notice is reserved. Product markings may not be exactly as the ordering codes. Errors and omissions excepted.

## Technical Data (type X3120-B, without filter)

| | |
|---|---|
| Rated voltage | AC 240 V |
| Current rating (inlet) | 16 A (IEC)<br>20 A (UL/CSA) |
| Ambient temperature | -25°C ...+60°C |
| Number of poles | L, N + earth |
| Protection class: | I |
| Mounting method: | screw-type mounting (front or rear) |
| Connection: | blade terminals DIN 46244<br>6.3 mm x 0.8 mm |
| Housing material: | thermoplastics, black UL94V-0 |
| Appliance inlet: | C20 according to IEC/EN 60320-1, UL498 |
| Mains switch: | Circuit breaker 3120-F5/-F7/-F8<br>(3120-F8 with push button actuation: technical data upon request) |

## Technical Data (type X3120-A with filter)

| | |
|---|---|
| Rated voltage | AC 250 V |
| Current rating (inlet) | 10 A (IEC)<br>15 A (UL/CSA) |
| Current rating (filter) | 1 A, 3 A, 6 A, 8 A, 10 A, 12 A, 15 A |
| Ambient temperature | -25°C ...+60°C |
| Number of poles | L, N + earth |
| Protection class: | I |
| Mounting method: | screw-type mounting (front or rear) |
| Connection: | blade terminals DIN 46244<br>6.3 mm x 0.8 mm |
| Housing material: | thermoplastics, black UL94V-0 |
| Appliance inlet: | C14 according to IEC/EN 60320-1, UL498 |
| Mains switch: | Circuit breaker 3120-F5/-F7/-F8<br>(3120-F8 with push button actuation: technical data upon request) |

1

## Dimensions (type X3120-B)

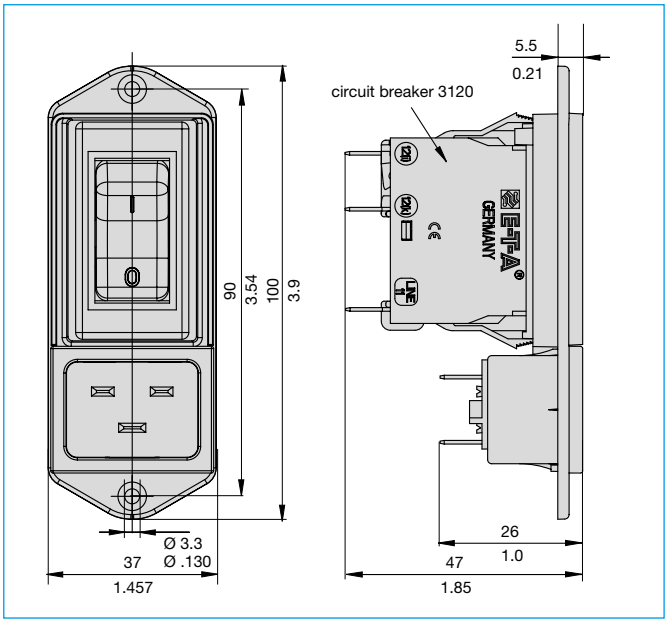


## Dimensions (type X3120-A)

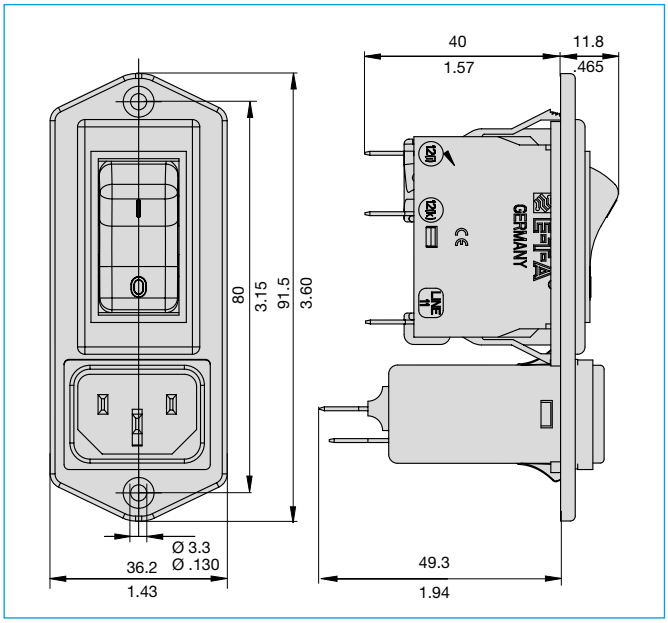


## Cut-out dimensions (type X3120-B)

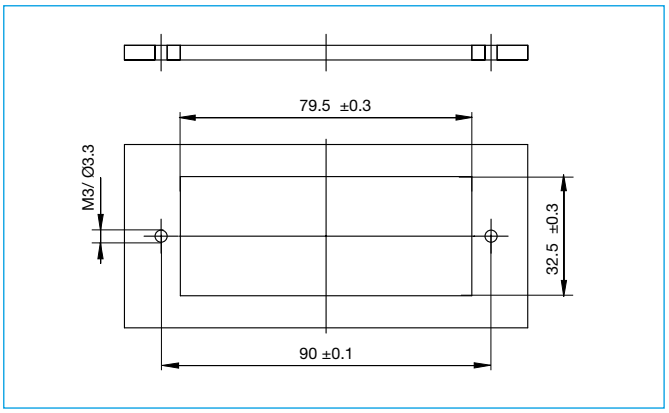


## Cut-out dimensions (type X3120-A)

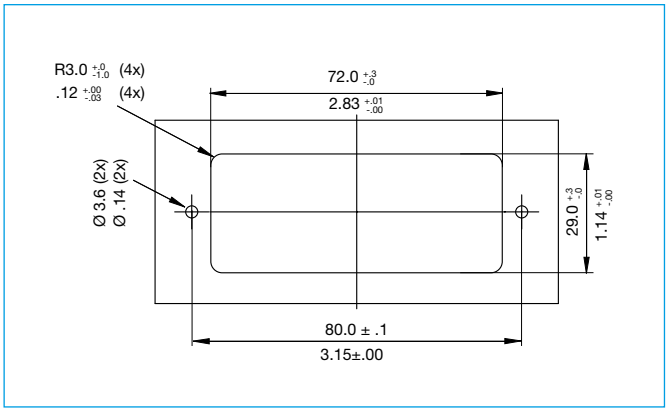

## Electrical schematics X3120-A

**X3120-A0401**
**General performance filter**

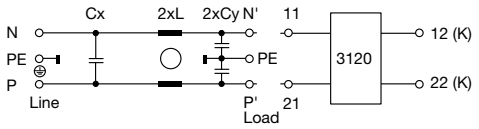


**X3120-A0403 und X3120-A0406**
**Medical version**

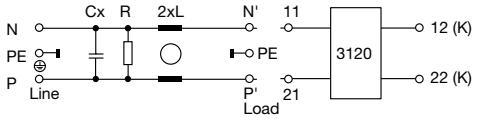


1

## X3120-A0401 and X3120-A0403 - General performance filter

Typical filter attenuation: Per CISPR 17
A = 50 Ω / 50 Ω sym; B = 50 Ω / 50 Ω asym; C = 0.1 Ω / 100 Ω sym; D = 100 Ω / 0.1 Ω sym

1 and 3 A types

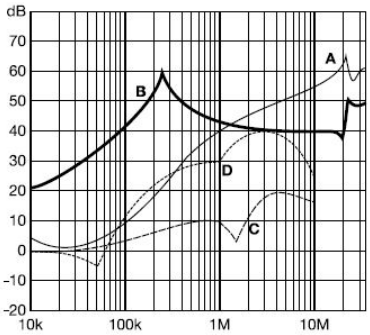


6 to 10 A types

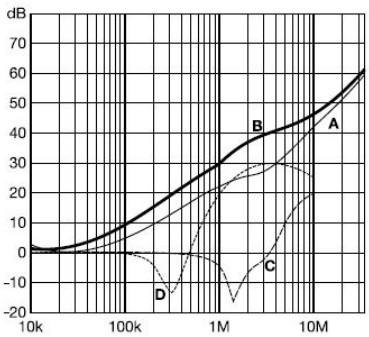


12 and 15 A types

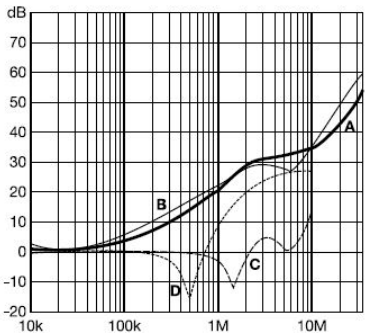


## X3120-A0406 - High performance filter

Typical filter attenuation: Per CISPR 17
A = 50 Ω / 50 Ω sym; B = 50 Ω / 50 Ω asym; C = 0.1 Ω / 100 Ω sym; D = 100 Ω / 0.1 Ω sym

1 and 3 A types

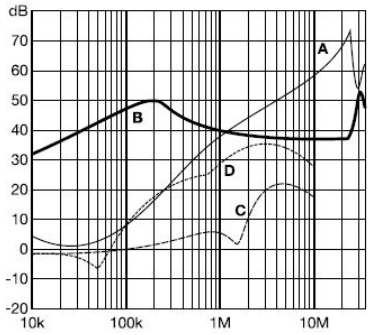


6 to 10 A types

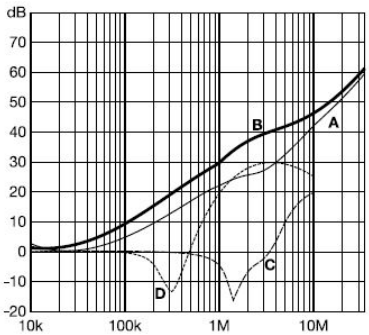


12 and 15 A types

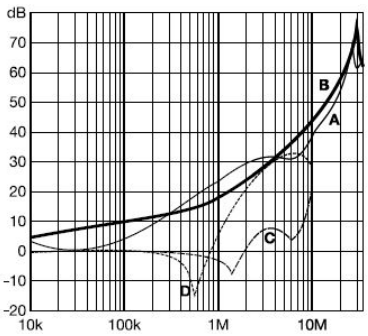

## Filter selection table

| Filter | Rated current 50°C (25°C) A | Leakage current 250VAC/50 Hz µA | Inductance L mH | Capacitance Cx µF | Capacitance Cy nF | Resistance R kΩ |
|---|---|---|---|---|---|---|
| X3120-A040101..M | 1 (1.2) | 373 | 12 | 0.1 | 2.2 | |
| X3120-A040103..M | 3 (3.5) | 373 | 2.5 | 0.1 | 2.2 | |
| X3120-A040106..M | 6 (7.2) | 373 | 0.78 | 0.1 | 2.2 | |
| X3120-A040108..M | 8 (10.6) | 373 | 0.5 | 0.1 | 2.2 | |
| X3120-A040110..M | 10 (11.6) | 373 | 0.225 | 0.1 | 2.2 | |
| X3120-A040112..M | 12 (12) | 373 | 0.11 | 0.1 | 2.2 | |
| X3120-A040115..M | 15 (15) | 373 | 0.075 | 0.1 | 2.2 | |
| | | | | | | |
| X3120-A040301..M | 1 (1.2) | 2 | 12 | 0.1 | | 1000 |
| X3120-A040303..M | 3 (3.5) | 2 | 2.5 | 0.1 | | 1000 |
| X3120-A040306..M | 6 (7.2) | 2 | 0.78 | 0.1 | | 1000 |
| X3120-A040308..M | 8 (10.6) | 2 | 0.5 | 0.1 | | 1000 |
| X3120-A040310..M | 10 (11.6) | 2 | 0.225 | 0.1 | | 1000 |
| X3120-A040312..M | 12 (12) | 2 | 0.11 | 0.1 | | 1000 |
| X3120-A040315..M | 15 (15) | 2 | 0.075 | 0.1 | | 1000 |
| | | | | | | |
| X3120-A040601..M | 1 (1.2) | 2 | 59.53 | 0.1 | | 1000 |
| X3120-A040603..M | 3 (3.5) | 2 | 13.45 | 0.1 | | 1000 |
| X3120-A040606..M | 6 (7.2) | 2 | 4.1 | 0.1 | | 1000 |
| X3120-A040608..M | 8 (10.6) | 2 | 2.3 | 0.1 | | 1000 |
| X3120-A040610..M | 10 (11.6) | 2 | 1.02 | 0.1 | | 1000 |
| X3120-A040612..M | 12 (12) | 2 | 0.58 | 0.1 | | 1000 |
| X3120-A040615..M | 15 (15) | 2 | 0.4 | 0.1 | | 1000 |

## Description undervoltage release module X3120-U

Add-on module for circuit breaker type 3120. The undervoltage release module trips the 3120 circuit breaker/switch combination in the event of a voltage drop or power failure. When the voltage is restored, the 3120 must be reset to reconnect the load, thereby avoiding the safety hazards associated with automatic re-start of machinery.
**Note:** Basic unit 3120-...-H7 or -G7 requires screw terminals. Not possible in combination with PT terminals.

1

## Typical applications

All machines and devices where automatic re-start after restoration of power could be dangerous, e.g. drilling machines, electric saws, sausage slicers etc.

## Order numbering code

**Type No.**
**X3120** module for type 3120
**Module**
**U** undervoltage release module
**Design**
**00** standard (without separate connections)
**01** 1 blade terminals 2.8x0.8
**02** 2 blade terminals 2.8x0.8
**Rated voltage**
**00** AC 230/240 V 50/60 Hz
**01** AC 120 V 50/60 Hz
**Assembly status**
**M** module mounted to circuit breaker 3120

**X3120- U 00 00 M** ordering example

## Dimensions

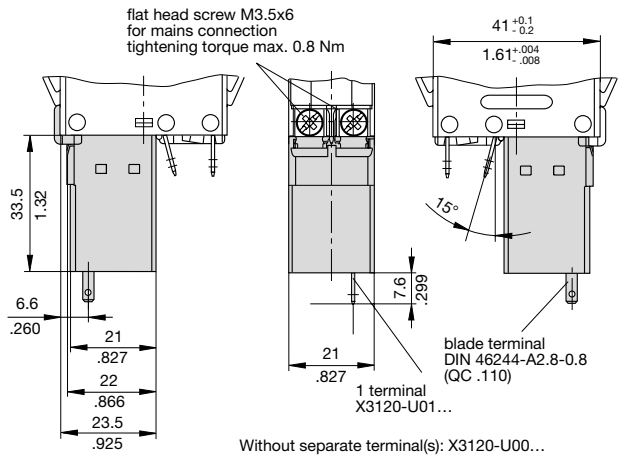


## Schematic diagrams

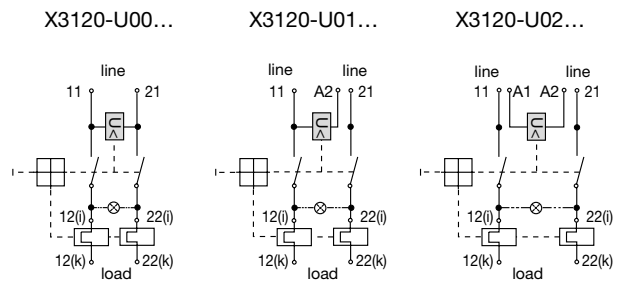


## Technical data

| | |
|---|---|
| Voltage ratings | AC 100 V; 120 V; 230/240 V (50/60 Hz); DC 24 V |
| Voltage tolerances | + 10 % / - 15 % |
| Typical life | 20,000 cycles |
| Current consumption | approx. 2.5 mA |
| Release values | $0.2 \times U_N < U < 0.7 \times U_N$ (at a rated voltage of AC 100 V the device can trip at 70 V and must trip at 20 V) |
| Release delay | < 20 ms |
| Latch-in values | ≥ 85 % $U_N$ |
| Ambient temperature | -30 … 60 °C |
| Vibration | 8 g (57-500 Hz), ± 0.61 mm (10-57 Hz) test to IEC 60068-2-6, test Fc 10 frequency cycles/axis |
| Shock | 30 g (11 ms) test to IEC 60068-2-27, test Ea |
| Corrosion | 48 hours at 5 % salt mist, test to IEC 60068-2-11, test Ka |
| Humidity | 240 hrs in 95 % RH test to IEC 60068-2-78, test Cab |
| Mass | approx. 53 g (including base unit) |

All dimensions without tolerances are for reference only. E-T-A reserves the right change specifications at any time in the interest of improved design, performance and cost effectiveness, the right to make changes in these specifications without notice is reserved. Product markings may not be exactly as the ordering codes. Errors and omissions excepted.

## Description auxiliary contact module X3120-S

Add-on module for circuit breaker type 3120-F. The auxiliary contact module has a change-over contact as signal contact and is operated with actuation of the CBE. Not possible in combination with PT terminals.

## Typical applications

Status monitoring of CBE and/or the connected loads.

## Order numbering code

**Type No.**
**X3120** module for types 3120 and 3140

**Module**
**S** auxiliary contact module

**Contact configuration**
**0** change-over contact

**Terminal design**
**1** blade terminals 2.8 x 0.5 (QC .110), silver-plated

**Contact rating**

| | AC voltage | | DC voltage | |
|---|---|---|---|---|
| | rated voltage | rated current | rated voltage | rated current |
| **A** | 10 V - 250 V | 0.1...4 A | 12 V | 0.1...4 A |
| | | | 24 V | 0.1...4 A |
| | | | 60 V | 0.1...1 A |
| | | | 110 V | 0.1...0.5 A |
| | | | 220 V | 0.1...0.25 A |
| **B** | 5 V - 250 V | 5 ...100 mA | 5 V - 250 V | 5...100 mA |

**Assembly status**
**M** module mounted to circuit breaker 3120

**X3120- S 0 1 A M** ordering example

* without approval mark

## Dimensions

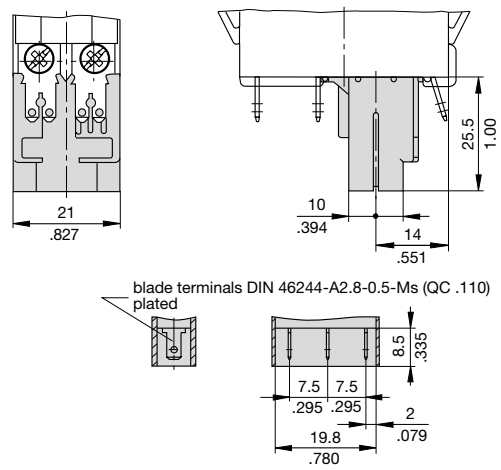


## Schematic diagram

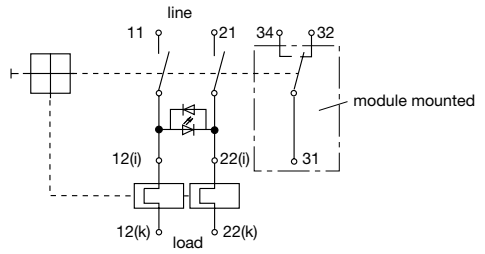


## Technical data

| | |
|---|---|
| Rated voltage | AC 250 V, DC 220 V |
| Current ratings | 0.1...4 A / 5...100 mA |
| Typical life | 50,000 cycles |
| Ambient temperature | -30…60 °C |
| **Dielectric strength** | |
| between main and auxiliary circuit | test voltage AC 3,000 V |
| Insulation resistance | > 100 MOhm (DC 500 V) |
| Vibration | 6 g<br>(57-500 Hz), ± 0.46 mm (10-57 Hz)<br>test to IEC 60068-2-6, test Fc<br>10 frequency cycles/axis |
| Shock | 15 g (11 ms)<br>test to IEC 60068-2-27, test Ea |
| Corrosion | 96 hours at 5 % salt mist,<br>test to IEC 60068-2-11, test Ka |
| Humidity | 240 hrs in 95 % RH<br>test to IEC 60068-2-78,<br>test Cab |
| Mass | approx. 38 g (including base unit) |

All dimensions without tolerances are for reference only. E-T-A reserves the right change specifications at any time in the interest of improved design, performance and cost effectiveness, the right to make changes in these specifications without notice is reserved. Product markings may not be exactly as the ordering codes. Errors and omissions excepted.

## Description remote trip module X3120-M

A module which adds remote trip capability to all versions of type 3120-F. A voltage applied across the coil, by means of an external sensor for example, will cause disconnection of the main switch/ circuit breaker mechanism.
Not possible in combination with PT terminals.

## Typical applications

Electrical remote trip of safety systems.

1

## Order numbering code

**Type No.**
**X3120** module for type 3120
**Module**
**M** magnetic relay trip module
**Style**
**2** magnetic remote trip coil
**Terminal design**
**P7** blade terminals DIN 46244-A6.3-0.8
**Assembly status**
**M** module mounted to circuit breaker 3120
**Rated voltage**
**AC 120, 230 V**
**DC 12, 24 V**

**X3120- M 2 P7 M -12 V** ordering example

## Standard voltage ratings and typical internal resistance values

| voltage rating | internal internal resistance (Ω) | voltage rating | internal internal resistance (Ω) |
|---|---|---|---|
| DC 12 V | 0.78 | AC 120 V | 71.0 |
| DC 24 V | 3.3 | AC 230 V | 312 |

## Dimensions

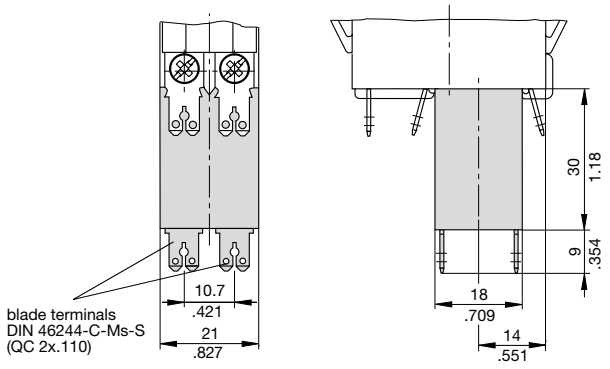


## Schematic diagram

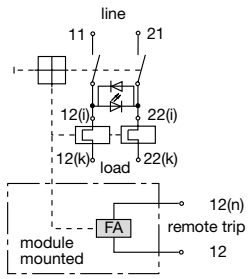


## Technical data

| | |
|---|---|
| Voltage ratings | AC 120...230 V; DC 12...24 V |
| Power consumption | approx. 200 Watt |
| Pulse operation | 20 ms < $t_{ON}$ < 100 ms / $t_{OFF}$ > 10 sec |
| Trip time | < 20 ms |
| Typical life | 50,000 operations at $U_N$ |
| Ambient temperature | -30…60 °C |
| **Dielectric strength** | |
| between main and trip current circuit | test voltage AC 3,000 V |
| Insulation resistance | > 100 MOhm (DC 500 V) |
| Vibration | 8 g (57-500 Hz), ± 0.61 mm (10-57 Hz) test to IEC 60068-2-6, test Fc 10 frequency cycles/axis |
| Shock | 30 g (11 ms) test to IEC 60068-2-27, test Ea |
| Corrosion | 96 hours at 5 % salt mist, test to IEC 60068-2-11, test Ka |
| Humidity | 240 hrs in 95 % RH test to IEC 60068-2-78, test Cab |
| Mass | approx. 53 g (including base unit) |

All dimensions without tolerances are for reference only. E-T-A reserves the right change specifications at any time in the interest of improved design, performance and cost effectiveness, the right to make changes in these specifications without notice is reserved. Product markings may not be exactly as the ordering codes. Errors and omissions excepted.

Общество с ограниченной ответственностью «МосЧип» ИНН 7719860671 / КПП 771901001
Адрес: 105318, г.Москва, ул.Щербаковская д.3, офис 1107

**Данный компонент на территории Российской Федерации**

**Вы можете приобрести в компании MosChip.**

Для оперативного оформления запроса Вам необходимо перейти по данной ссылке:

http://moschip.ru/get-element

Вы можете разместить у нас заказ для любого Вашего проекта, будь то серийное производство или разработка единичного прибора.

В нашем ассортименте представлены ведущие мировые производители активных и пассивных электронных компонентов.

Нашей специализацией является поставка электронной компонентной базы двойного назначения, продукции таких производителей как XILINX, Intel (ex.ALTERA), Vicor, Microchip, Texas Instruments, Analog Devices, Mini-Circuits, Amphenol, Glenair.

Сотрудничество с глобальными дистрибьюторами электронных компонентов, предоставляет возможность заказывать и получать с международных складов практически любой перечень компонентов в оптимальные для Вас сроки.

На всех этапах разработки и производства наши партнеры могут получить квалифицированную поддержку опытных инженеров.

Система менеджмента качества компании отвечает требованиям в соответствии с ГОСТ Р ИСО 9001, ГОСТ РВ 0015-002 и ЭС РД 009

**Офис по работе с юридическими лицами:**

105318, г.Москва, ул.Щербаковская д.3, офис 1107, 1118, ДЦ «Щербаковский»

Телефон: +7 495 668-12-70 (многоканальный)

Факс: +7 495 668-12-70 (доб.304)

E-mail: info@moschip.ru

Skype отдела продаж:
moschip.ru
moschip.ru_4
moschip.ru_6
moschip.ru_9