Internal 3.5A MOSFET Switching Regulator IC for Buck Converter

■ GENERAL DESCRIPTION

The **NJW4196** is a buck converter with **40V/3.5A** MOSFET.

The transient response when a supply voltage rises from a reduced voltage is improved than conventional current mode products, therefore the **NJW4196** provides stable regulation characteristic even if application which an operating voltage fluctuates.

External Clock Synchronization function synchronizes oscillating frequency with external clock input.

Also, it has a soft start function, an external clock synchronization, an over current protection and a thermal shutdown circuit.

It is suitable for supplying power to a Car Accessory, Office Automation Equipment, Industrial Instrument and so on.

■ PACKAGE OUTLINE

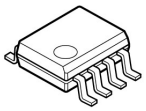

NJW4196GM1

■ FEATURES

- Fast supply voltage transient response from a reduced voltage
- External Clock Synchronization
- Wide Operating Voltage Range 4.45V to 40V
- Switching Current 5A min.
- Oscillating Frequency A ver. Fixed 450kHz typ.
  J ver . Adjustable TBD(100kHz) to TBD
- PWM Control
- Maximum Duty Cycle 100%
- Correspond to Ceramic Capacitor (MLCC)
- Adjustable Soft Start Function
- UVLO (Under Voltage Lockout)
- Over Current Protection (Hiccup type)
- Thermal Shutdown Protection
- Power Good Function
- Standby Function
- Package Outline NJW4196GM1 : HSOP8

■ PRODUCT CLASSIFICATION

Part Number	Version	Oscillating Frequency	Operating Temperature Range
NJW4196GM1-A	A	Fixed 450kHz typ.	General Spec. -40°C to +125°C
NJW4196GM1-J (U.D.)	J	Adjustable TBD(100kHz) to TBD	General Spec. -40°C to +125°C

■ PIN CONFIGURATION

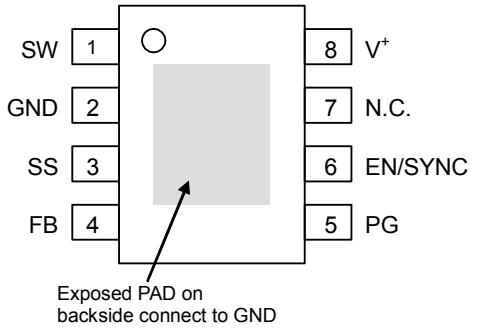

NJW4196GM1-A

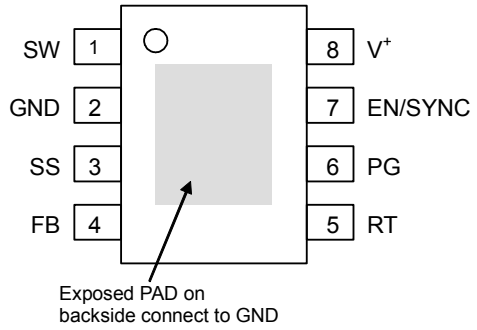

NJW4196GM1-J
(U.D.)

■ PIN DESCRIPTIONS

PIN NAME	PIN NUMBER		FUNCTION
	A version	J version (U.D.)	
SW	1	1	Switch Output pin of Power MOSFET
GND	2	2	GND pin
SS	3	3	Soft Start timer setting pin. Soft start time is set by an external capacitor.
FB	4	4	Output Voltage Detecting pin Connects output voltage through the resistor divider tap to this pin in order to voltage of the FB pin become 1V.
RT	–	5	Oscillating Frequency Setting pin with an external Timing Resistor. Oscillating Frequency should set between TBD(100kHz) and TBD. (Only J version)
PG	5	6	Power Good pin. An open drain output that goes high impedance when the FB pin voltage is stable around ±15%.
EN/SYNC	6	7	Standby Control pin The EN/SYNC pin internally pulls down with 500kΩ. Normal Operation at the time of High Level. Standby Mode at the time of Low Level or OPEN. Moreover, it operates by inputting clock signal at the oscillatory frequency that synchronized with the input signal.
N.C.	7	–	Non Connection (Only A version)
V^+	8	8	Power Supply pin for Power Line
Exposed PAD	–	–	Connect to GND

■ BLOCK DIAGRAM

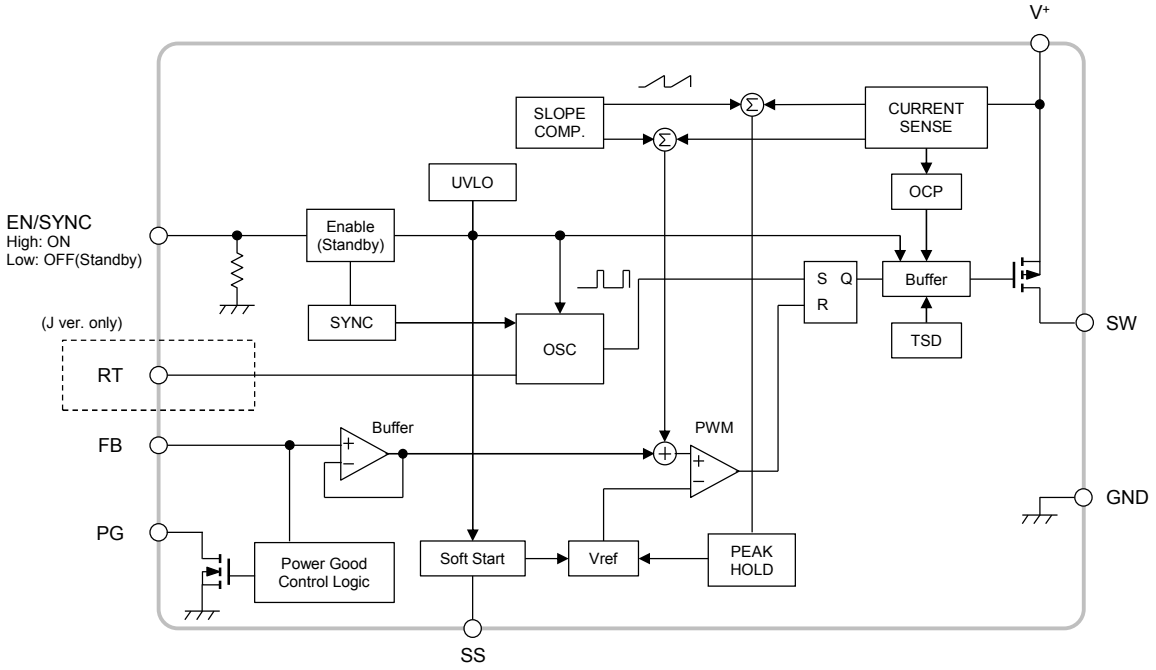

■ ABSOLUTE MAXIMUM RATINGS (Ta=25°C)

PARAMETER	SYMBOL	MAXIMUM RATINGS	UNIT
Supply Voltage	V^+	-0.3～+45	V
V^+- SW pin Voltage	$V_{V\text{-}SW}$	+45	V
FB pin Voltage	V_{FB}	-0.3～+6	V
PG pin Voltage	V_{PG}	-0.3～+6	V
EN/SYNC pin Voltage	$V_{EN/SYNC}$	-0.3～+45	V
Power Dissipation	P_D	HSOP8 860 (*1) 2,900 (*2)	mW
Junction Temperature Range	T_j	-40 to +150	°C
Operating Temperature Range	T_{opr}	-40 to +125	°C
Storage Temperature Range	T_{stg}	-50 to +150	°C

(*1): Mounted on glass epoxy board. (76.2×114.3×1.6mm:based on EIA/JDEC standard, 2Layers)

(*2): Mounted on glass epoxy board. (76.2×114.3×1.6mm:based on EIA/JDEC standard, 4Layers)

(For 4Layers: Applying 74.2×74.2mm inner Cu area and a thermal via hall to a board based on JEDEC standard JESD51-5)

Depending on conditions of the application, NJW4196 may not apply a max output current of it by a limit of the power consumption.

■ RECOMMENDED OPERATING CONDITIONS

PARAMETER	SYMBOL	MIN.	TYP.	MAX.	UNIT
Supply Voltage	V^+	4.45	–	40	V
Power Good pin Voltage	V_{PG}	0	–	5.5	V
Timing Resistor (*3)	R_T	TBD	–	TBD	kΩ
Oscillating Frequency (*3)	f_{OSC}	TBD (100)	–	TBD	kHz
External Clock Input Range A version J version (U.D.)	f_{SYNC}	 440 0.9×fosc	 – –	 600 1.3×fosc	kHz

(*3): Apply only the J version.

■ ELECTRICAL CHARACTERISTICS

(Unless otherwise noted, $V^+=V_{EN/SYNC}$=12V, Ta=25°C, J version: R_T=TBD kΩ)

PARAMETER	SYMBOL	TEST CONDITION	MIN.	TYP.	MAX.	UNIT
Under Voltage Lockout Block						
ON Threshold Voltage	V_{T_ON}	V^+= L → H	4.05	4.25	4.45	V
OFF Threshold Voltage	V_{T_OFF}	V^+= H → L	4.0	4.15	4.3	V
Hysteresis Voltage	V_{HYS}		70	100	–	mV
Soft Start Block						
Charge Current	I_{CHG}		3.5	4.0	4.5	μA
Oscillator Block						
Oscillating Frequency (*4)	f_{OSC_A}		405	450	495	kHz
Oscillating Frequency 1 (*5)	f_{OSC1_J}	R_T=TBDkΩ	270	300	330	kHz
Oscillating Frequency 2 (*5)	f_{OSC2_J}	R_T=TBDkΩ	TBD	TBD	TBD	kHz
Oscillating Frequency deviation (Supply voltage)	f_{DV}	V^+=4.45V to 40V	–	1	–	%
Oscillating Frequency deviation (Temperature)	f_{DT}	Ta=-40°C to +85°C	–	5	–	%

(*4): A version
(*5): J version (U.D.)

Buffer Block						
Reference Voltage	V_B		-1.0%	1	+1.0%	V
Threshold Voltage	V_{TH}	I_{SW}=3A	-2.0%	1	+2.0%	V
Input Bias Current	I_B		-0.1	–	0.1	μA
PWM Comparate Block						
Maximum Duty Cycle	$M_{AX}D_{UTY}$	V_{FB}=0.9V	–	–	100	%
Minimum ON Time	$t_{ON\text{-}min}$		–	125	185	ns
OCP Block						
COOL DOWN Time	t_{COOL}		–	75	–	ms
Output Block						
Output ON Resistance	R_{ON}	I_{SW}=3A	–	0.125	0.25	Ω
Switching Current Limit	I_{LIM}		5	6.5	8	A
SW Leak Current	I_{LEAK}	$V_{EN/SYNC}$=0V, V^+=40V, V_{SW}=0V	–	–	5	μA
Standby Control / Sync Block						
EN/SYNC pin High Threshold Voltage	$V_{THH_EN/SYNC}$	$V_{EN/SYNC}$= L → H	1.6	–	V^+	V
EN/SYNC pin Low Threshold Voltage	$V_{THL_EN/SYNC}$	$V_{EN/SYNC}$= H → L	0	–	0.5	V
Input Bias Current (EN/SYNC pin)	$I_{EN/SYNC}$	$V_{EN/SYNC}$=12V	–	235	340	μA

■ ELECTRICAL CHARACTERISTICS

(Unless otherwise noted, $V^+=V_{EN./SYNC}$=12V, Ta=25°C, J version: R_T=TBD kΩ)

PARAMETER	SYMBOL	TEST CONDITION	MIN.	TYP.	MAX.	UNIT
Power Good Block						
High Level Detection Voltage	V_{THH_PG}	Measured at FB pin	110	115	120	%
Low Level Detection Voltage	V_{THL_PG}	Measured at FB pin	80	85	90	%
Hysterisis Region	V_{HYS_PG}		–	2	–	%
Power Good ON Resistance	R_{ON_PG}	I_{PG}=10mA	–	45	60	Ω
Leak Current at OFF State	I_{LEAK_PG}	V_{PG}=6V	–	–	0.1	μA
General Characteristics						
Quiescent Current	I_{DD}	R_L=no load, V_{FB}=0.9V	–	3.5	4.2	mA
Standby Current	I_{DD_STB}	$V_{EN/SYNC}$=0V	–	–	3	μA

■ THERMAL CHARACTERISTICS

PARAMETER	SYMBOL	VALUE	UNIT
Junction-to-ambient thermal resistance	θja	145 (*6) 43 (*7)	°C/W
Junction-to-Top of package characterization parameter	ψjt	28 (*6) 12 (*7)	°C/W

(*6): Mounted on glass epoxy board. (76.2×114.3×1.6mm:based on EIA/JDEC standard, 2Layers)

(*7): Mounted on glass epoxy board. (76.2×114.3×1.6mm:based on EIA/JDEC standard, 4Layers)

(For 4Layers: Applying 74.2×74.2mm inner Cu area and a thermal via hall to a board based on JEDEC standard JESD51-5)

■ POWER DISSIPATION vs. AMBIENT TEMPERATURE

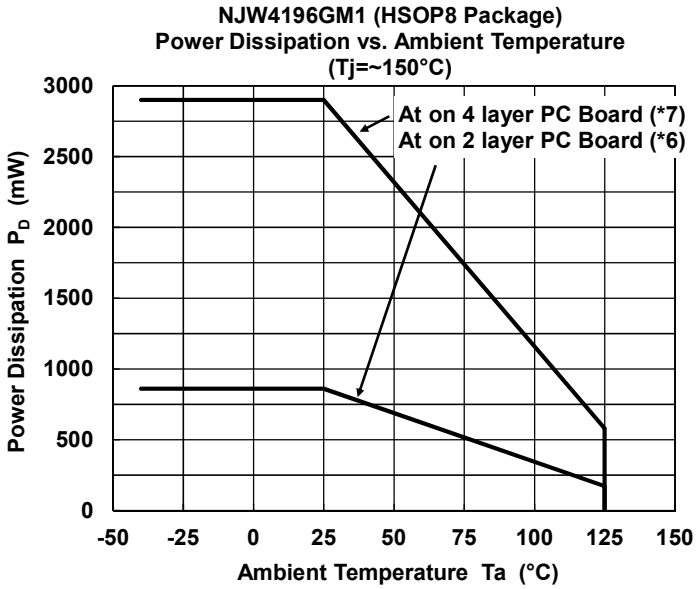

■ TYPICAL APPLICATIONS

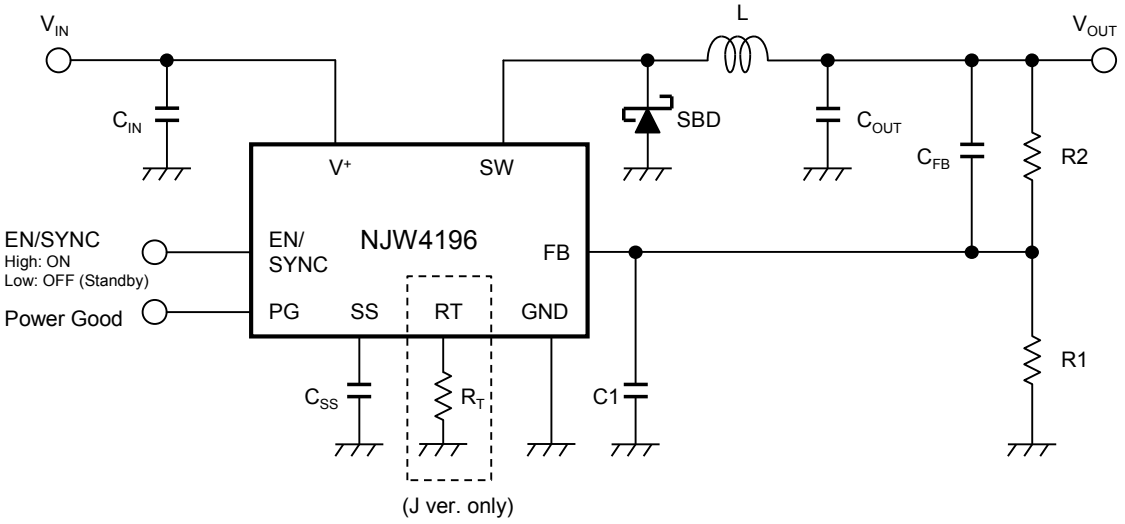

■ TYPICAL CHARACTERISTICS (A, J version)

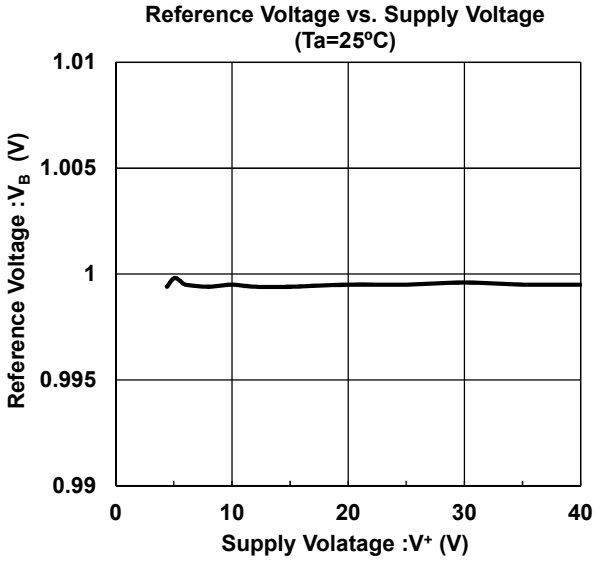

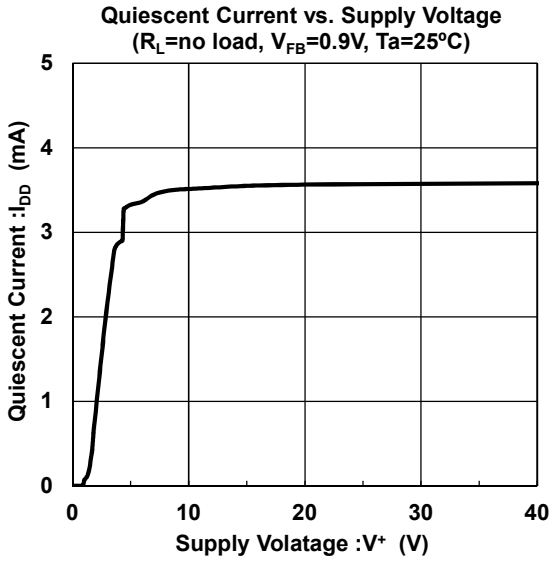

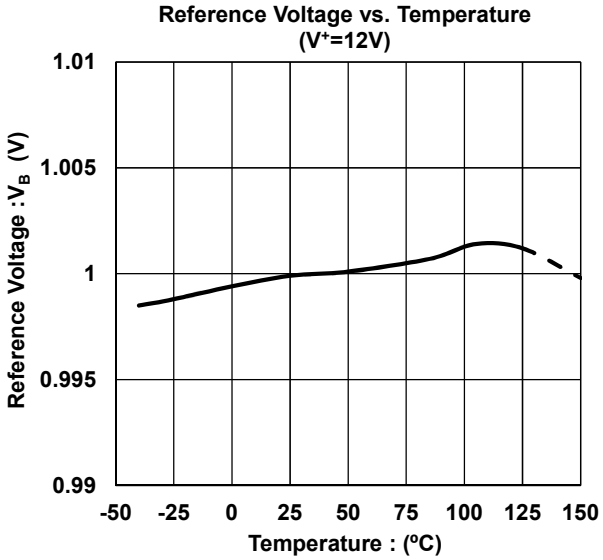

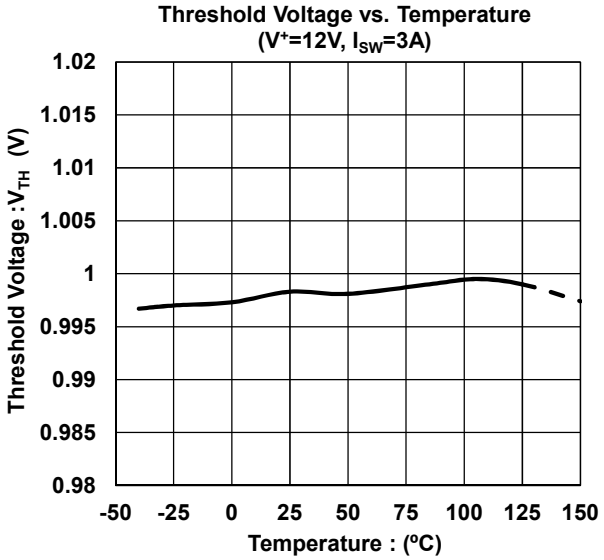

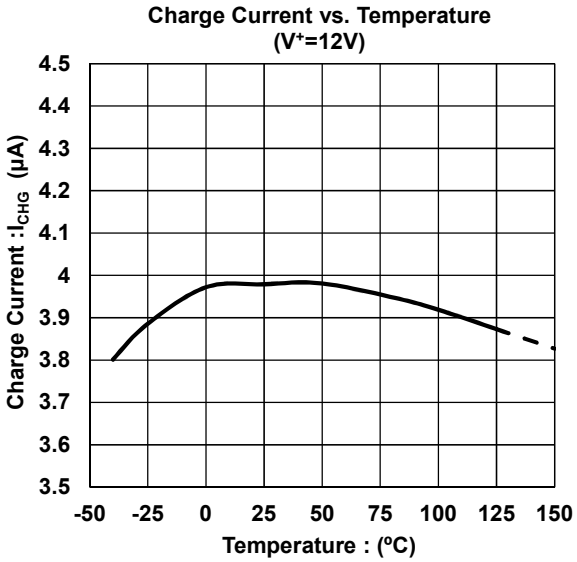

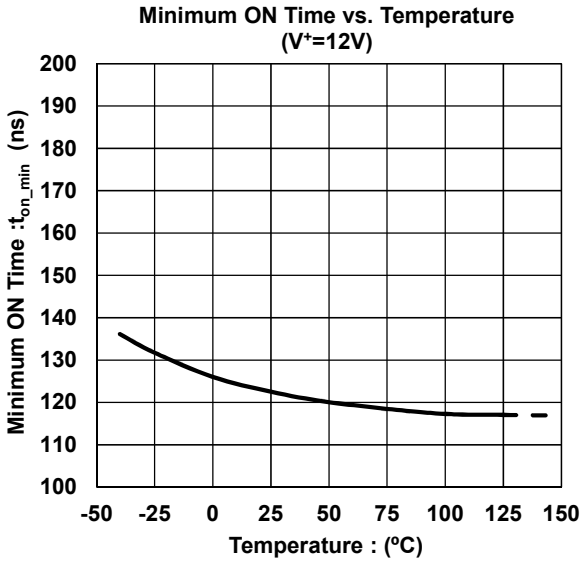

■ TYPICAL CHARACTERISTICS (A, J version)

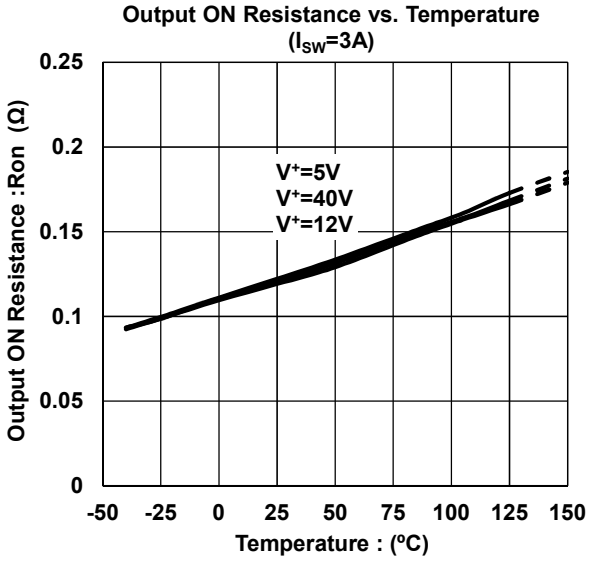

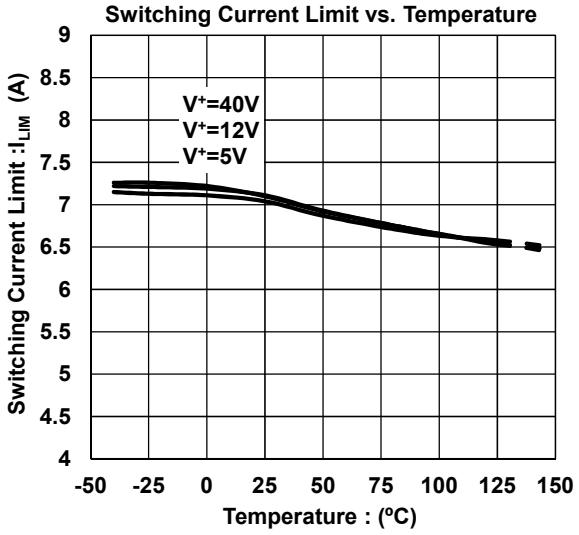

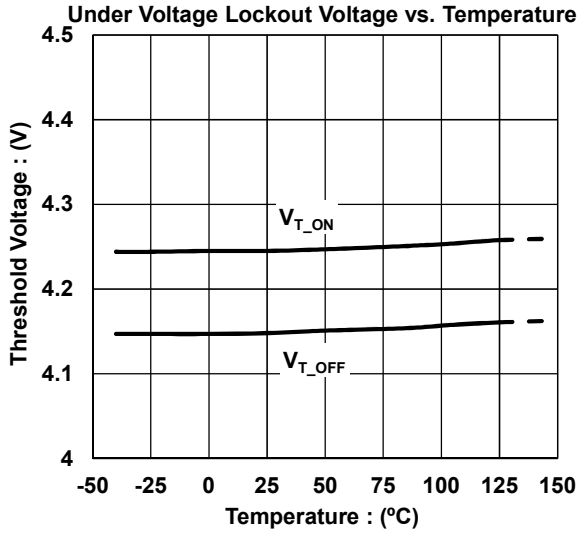

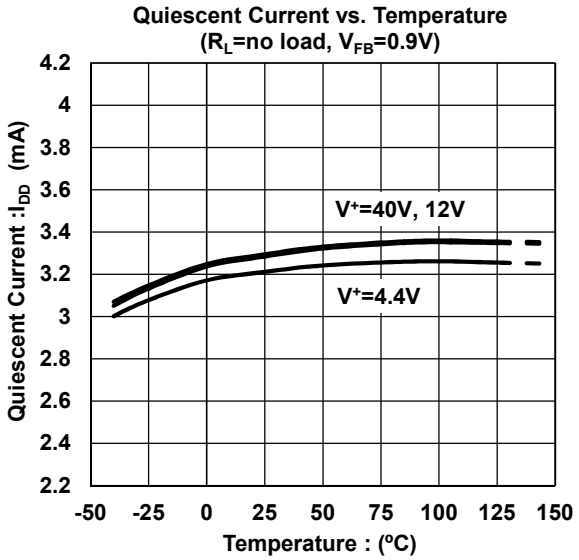

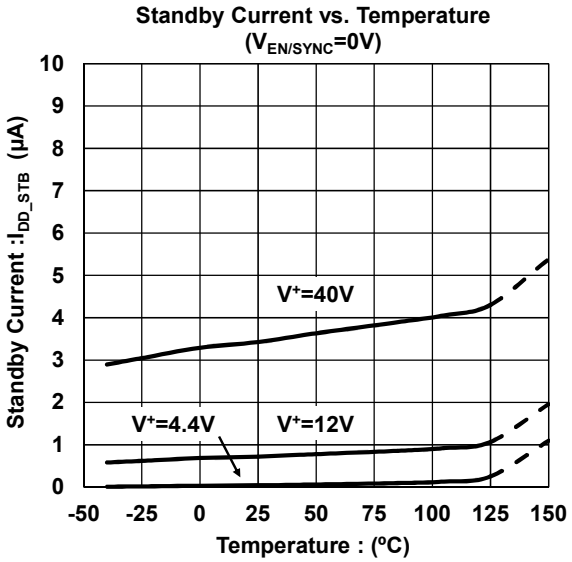

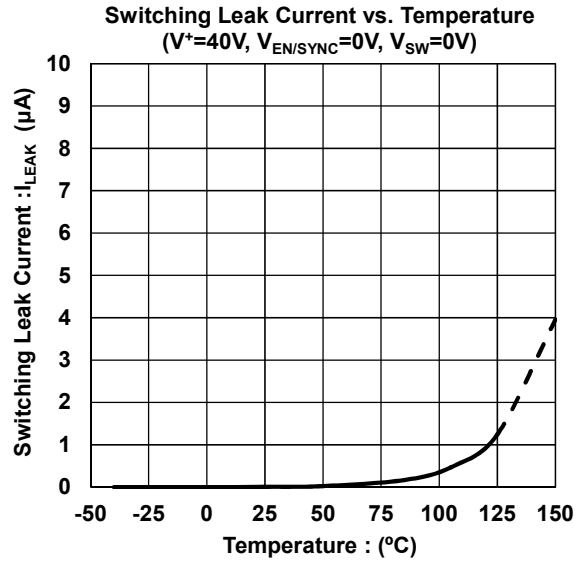

■ TYPICAL CHARACTERISTICS (A version)

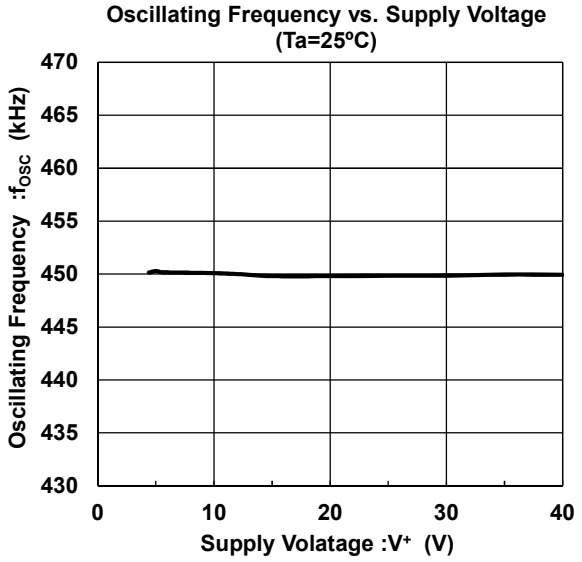

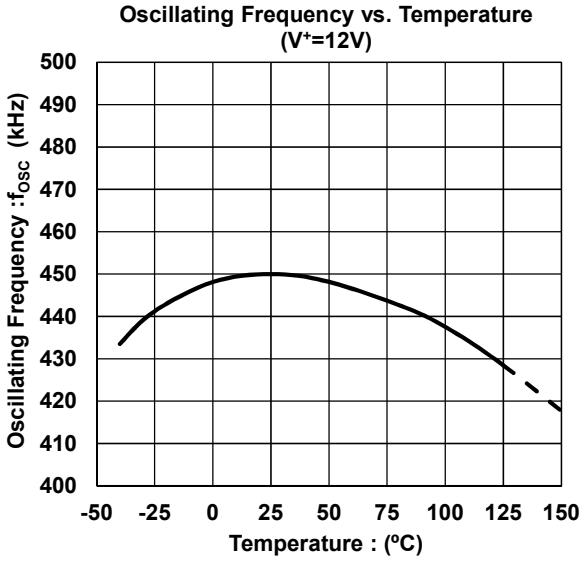

MEMO

[CAUTION]
The specifications on this databook are only given for information , without any guarantee as regards either mistakes or omissions. The application circuits in this databook are described only to show representative usages of the product and not intended for the guarantee or permission of any right including the industrial rights.

Mouser Electronics

Authorized Distributor

Click to View Pricing, Inventory, Delivery & Lifecycle Information:

NJR:

NJW4196GM1-TE1

Общество с ограниченной ответственностью «МосЧип» ИНН 7719860671 / КПП 771901001
Адрес: 105318, г.Москва, ул.Щербаковская д.3, офис 1107

Данный компонент на территории Российской Федерации

Вы можете приобрести в компании MosChip.

Для оперативного оформления запроса Вам необходимо перейти по данной ссылке:

http://moschip.ru/get-element

Вы можете разместить у нас заказ для любого Вашего проекта, будь то серийное производство или разработка единичного прибора.

В нашем ассортименте представлены ведущие мировые производители активных и пассивных электронных компонентов.

Нашей специализацией является поставка электронной компонентной базы двойного назначения, продукции таких производителей как XILINX, Intel (ex.ALTERA), Vicor, Microchip, Texas Instruments, Analog Devices, Mini-Circuits, Amphenol, Glenair.

Сотрудничество с глобальными дистрибьюторами электронных компонентов, предоставляет возможность заказывать и получать с международных складов практически любой перечень компонентов в оптимальные для Вас сроки.

На всех этапах разработки и производства наши партнеры могут получить квалифицированную поддержку опытных инженеров.

Система менеджмента качества компании отвечает требованиям в соответствии с ГОСТ Р ИСО 9001, ГОСТ РВ 0015-002 и ЭС РД 009

Офис по работе с юридическими лицами:

105318, г.Москва, ул.Щербаковская д.3, офис 1107, 1118, ДЦ «Щербаковский»

Телефон: +7 495 668-12-70 (многоканальный)

Факс: +7 495 668-12-70 (доб.304)

E-mail: info@moschip.ru

Skype отдела продаж:
moschip.ru
moschip.ru_4
moschip.ru_6
moschip.ru_9