HA / HD48 Series

- Ratings from 12A to 125A @ 48-530 VAC
- SCR output for heavy industrial loads
- Zero Voltage or instantaneous turn-on outputs
- UL/CSA/VDE Approved, CE Compliant to EN60950-1
- Improved SEMS screw and washer
- Redesigned housing with anti-rotation barriers
- AC or DC control
- Direct bond copper substrate
- EMC compliant to Level 3
- Direct power lead frame
- Epoxy free design

For **Generation 3** datasheet click here

PRODUCT SELECTION

Control Voltage	12A	25A	50A	75A	90A	110A	125A
4-32 VDC	HD4812	HD4825	HD4850	HD4875	HD4890	HD48110	HD48125
90-280 Vrms	HA4812	HA4825	HA4850	HA4875	HA4890	HA48110	HA48125
18-36 Vrms	HA4812E	HA4825E	HA4850E	HA4875E	HA4890E	HA48110E	HA48125E

AVAILABLE OPTIONS

Series

Control Voltage
A: 90-280 VAC
D: 4-32 VDC
AxxxxE: 18-36 VAC

Overvoltage Protection
Blank: Not Included
P: Included (3)

Snubber
Blank: Not Included
S: Included

Switching Type
Blank: Zero Voltage Turn-On
-10: Instantaneous Turn-On (4)

H A 48 25 E K P G S H -10

Operating Voltage
48: 48-530 VAC

Rated Load Current
12: 12 Amps
25: 25 Amps
50: 50 Amps
75: 75 Amps
90: 90 Amps
110: 110 Amps
125: 125 Amps

Termination
Blank: Screw
F: Quick Connect (1)
(Up to 50 Amps models)
K: Hex standoffs (2)

Input Status LED
Blank: Not Included
G: Included

Thermal Pad
Blank: Not Included
H: Included

Required for valid part number
For options only and not required for valid part number
* Not all part number combinations are available. Contact Crydom Technical Support for information on the availability of a specific part number.

OUTPUT SPECIFICATIONS (5)

Description	12A	25A	50A	75A	90A	110A	125A
Operating Voltage (47-440Hz) [Vrms] (6)	48-530	48-530	48-530	48-530	48-530	48-530	48-530
Transient Overvoltage [Vpk]	1200	1200	1200	1200	1200	1200	1200
Maximum Off-State Leakage Current @ Rated Voltage [mArms] (7)	1	1	1	1	1	1	1
Minimum Off-State dv/dt @ Maximum Rated Voltage [V/µsec]	500	500	500	500	500	500	500
Maximum Load Current [Arms] (2)(8)	12	25	50	75	90	110	125
Minimum Load Current [mArms]	150	150	150	150	150	150	150
Maximum 1 Cycle Surge Current (50/60Hz) [Apk]	134/140	239/250	597/625	954/1000	1145/1200	1432/1500	1670/1750
Maximum On-State Voltage Drop @ Rated Current [Vrms]	1.15	1.15	1.15	1.15	1.15	1.15	1.15
Thermal Resistance Junction to Case (Rjc) [°C/W]	1.03	0.8	0.45	0.3	0.27	0.25	0.22
Maximum 1/2 Cycle I^2t for Fusing (50/60Hz) [A^2 sec]	66/60	285/259	1770/1629	4555/4150	6560/5976	10249/9338	13950/12709
Minimum Power Factor (at Maximum Load) (3)	0.5	0.5	0.5	0.5	0.5	0.5	0.5

Copyright © 2016 Crydom Inc. Specifications subject to change without notice.

INPUT SPECIFICATIONS (5)

Description	HD48xx	HA48xx	HA48xxE
Control Voltage Range	4-32 VDC (9)	90-280 Vrms	18-36 Vrms
Minimum Turn-On Voltage	4.0 VDC	90 Vrms	18 Vrms
Must Turn-Off Voltage	1.0 VDC	10 Vrms	4.0 Vrms
Maximum Reverse Voltage	-32 VDC	-	-
Minimum Input Current	7.0 mA	5 mA	16 mA
Maximum Input Current	12 mA	10 mA	20 mA
Nominal Input Impedance		Current Regulated	
Maximum Turn-On Time [msec]	1/2 Cycle (10)	20	20
Maximum Turn-Off Time [msec]	1/2 Cycle	30	30

GENERAL SPECIFICATIONS (5)

Description	Parameters
Dielectric Strength, Input/Output/Base (50/60Hz)	4000 Vrms
Minimum Insulation Resistance (@ 500 VDC)	10^9 Ohm
Maximum Capacitance, Input/Output	8 pF
Ambient Operating Temperature Range	-40 to 80 °C
Ambient Storage Temperature Range	-40 to 125 °C
Weight (typical)	2.6 oz (74.9 g)
Housing Material	UL94 V-0
Baseplate Material	Aluminum
Input Terminal Screw Torque Range (in-lb/Nm)	13-15 /1.5-1.7
Load Terminal Screw Torque Range (in-lb/Nm)	18-20 / 2.0-2.2
SSR Mounting Screw Torque Range (in-lb/Nm)	18-20 / 2.0-2.2
Input/Load Terminal Screw Torque Range (in-lb/Nm) (2)	w/"K" option 8-10 / 0.9-1.13
Input/Output Terminal Screw Thread Size	#6-32 UNC / #8-32 UNC
Humidity per IEC60068-2-78	93% non-condensing
LED Input Status indicatior	w/"G" option (green)
MTBF (Mean Time Between Failures) at 40°C ambient temperature (11)	11,641,553 hours (1,328 years)
MTBF (Mean Time Between Failures) at 60°C ambient temperature (11)	7,210,376 hours (823 years)

WIRING DIAGRAM

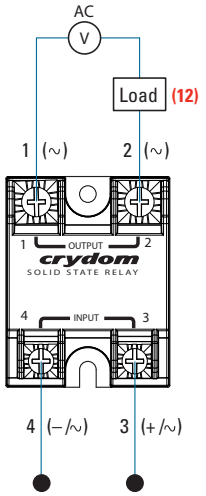

Recommended Wire Sizes

Terminals	Wire Size (Solid / Stranded)	Wire Pull-Out Strength (lb)[N]
Input	24 AWG (0.2 mm²) / 0.2 [minimum]	10 [44.5]
	2 x 12 AWG (3.3 mm²) / 3.3 [maximum]	90 [400]
Output	20 AWG (0.5 mm²) / 0.518 [minimum]	30 [133]
	2 x 10 AWG (5.3 mm²) / 5.3	110 [490]
	2 x 8 AWG (8.4 mm²) / 8.4 [maximum]	90 [400]

Input Current vs Input Voltage

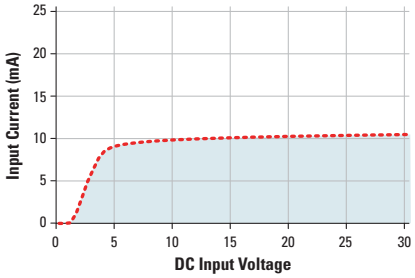

EQUIVALENT CIRCUIT BLOCK DIAGRAMS

Diagram: HAxxxx

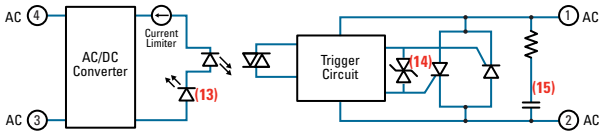

Diagram: HDxxxx

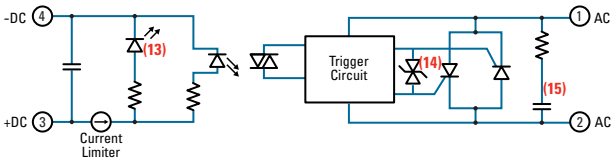

Copyright © 2016 Crydom Inc. Specifications subject to change without notice.

MECHANICAL SPECIFICATIONS (1)

Tolerances: ±0.02 in / 0.5 mm
All dimensions are in: inches [millimeters]

Screw Termination

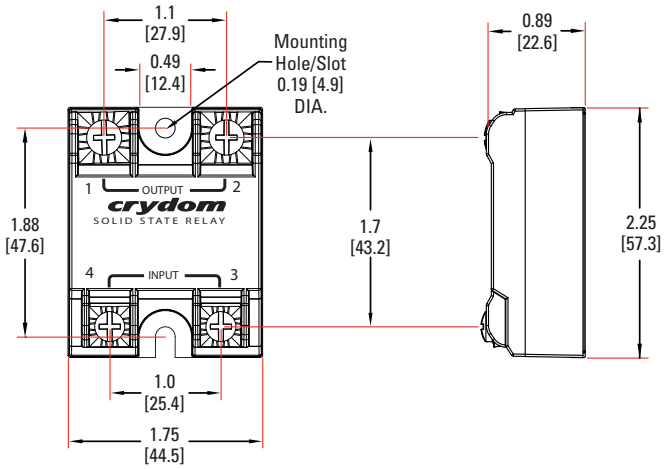

Hex Standoff Termination ("K" Option) (2)

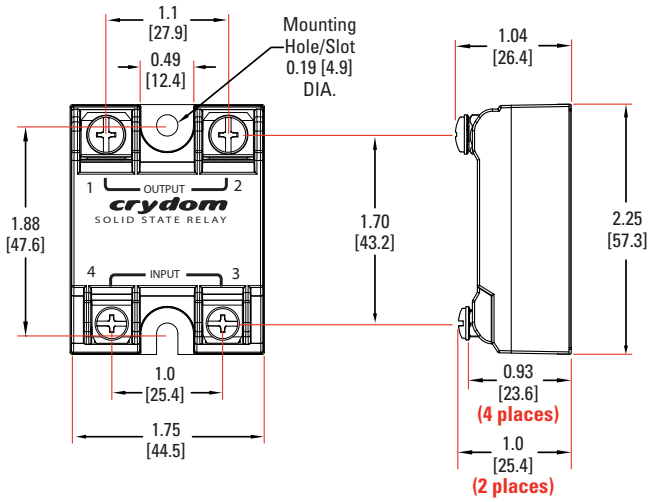

Quick Connect Termination ("F" Option) - Up to 25 Amp (1)

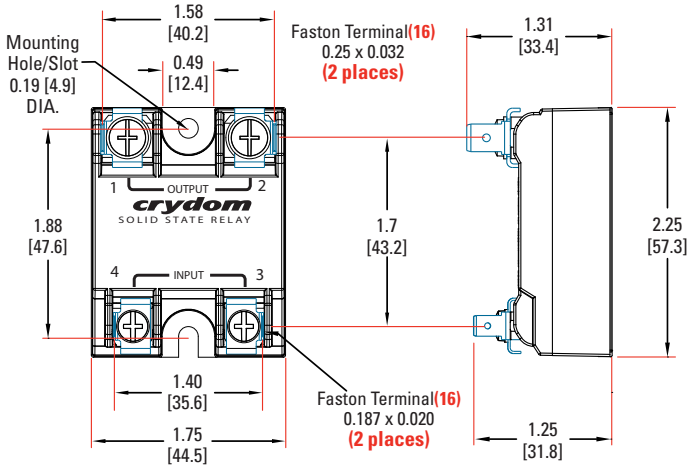

Quick Connect Termination ("F" Option) - Up to 50 Amp (1)

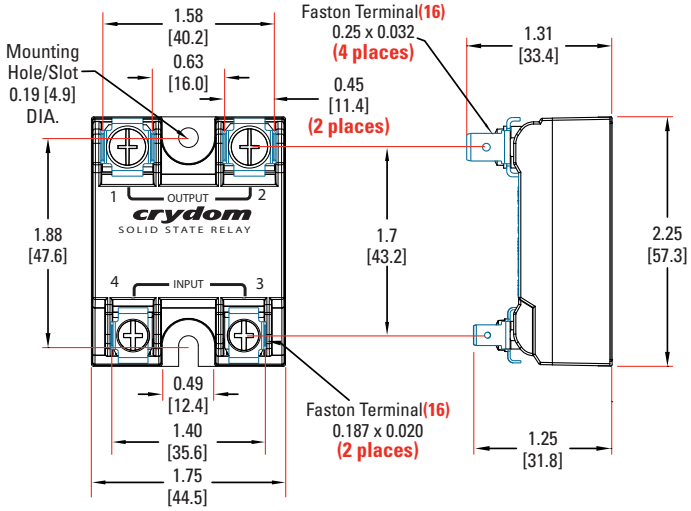

GENERAL NOTES

(1) Single pair (up to 25A) Double pair* (up to 50A). ***Caution:** User must connect both pairs.
(2) Option "K" is designed and tested for use with printed circuit boards or ring/fork terminals having a thickness between 0.031 and 0.093 inches (0.79 to 2.36 mm), and loads rated up to 50 Amps. For higher load currents, the "K" standoff temperature must not exceed 105°C. For additional application assistance please contact Crydom Technical Support.
(3) Output will self trigger between 900-1200Vpk, Min. power factor 0.7 or higher, not suitable for capacitive loads.
(4) Instantaneous turn-on version is not recomended for capacitive loads. Use zero turn-on only.
(5) All parameters at 25°C unless otherwise specified.
(6) For "S" option, operating voltage frequency is 47-63Hz.
(7) For parts with option "S" maximum leakage current is 10mA.
(8) Heat sinking required, see derating curves.
(9) Increase minimum voltage by 1V for operations from -20 to -40°C.
(10) Turn-on time for instantaneous turn-on versions is 0.02 msec (DC Control Models)
(11) All parameters at 50% power rating and 100% duty cycle (contact Crydom tech support for detailed report).
(12) Load can be wired to either SSR output terminal 1 or 2.
(13) Elective Input Status LED, "G" option
(14) Elective Overvoltage Protection, "P" option.
(15) Elective Internal Snubber, "S" option.
(16) Mechanical dimensions vary from G3 models.

For additional information or specific questions, contact Crydom Technical Support.

Copyright © 2016 Crydom Inc. Specifications subject to change without notice.

SURGE CURRENT INFORMATION

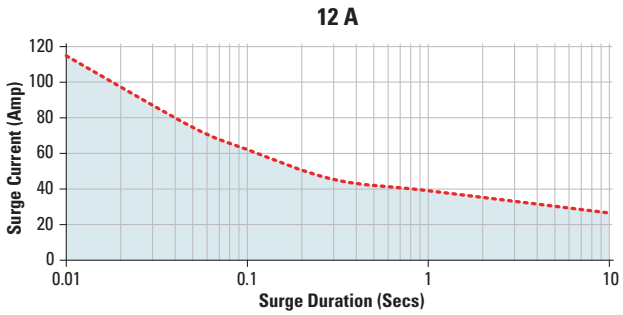

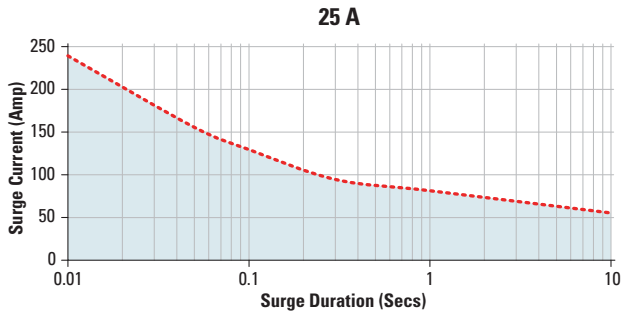

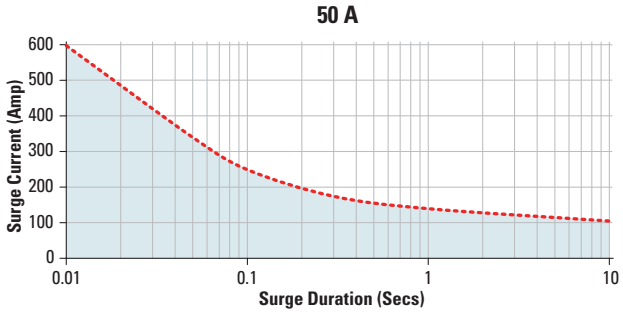

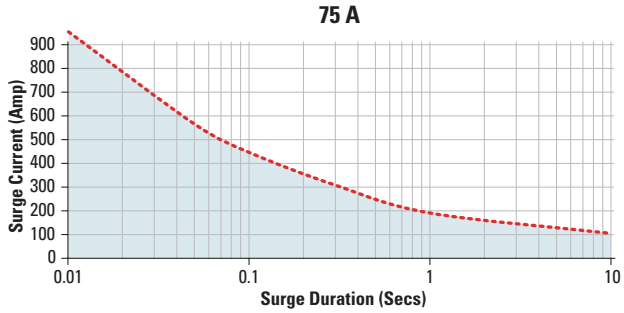

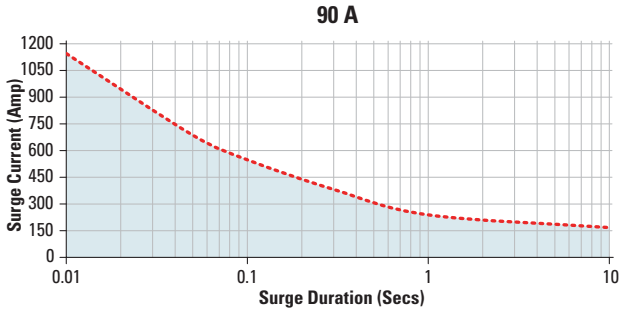

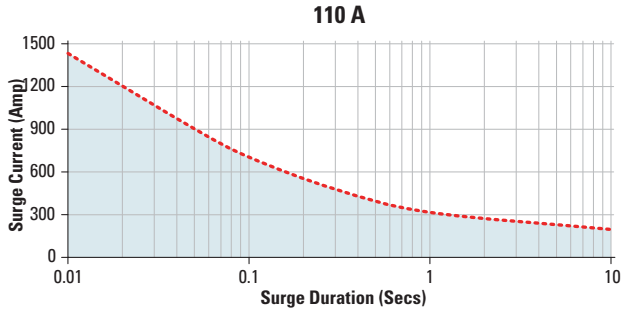

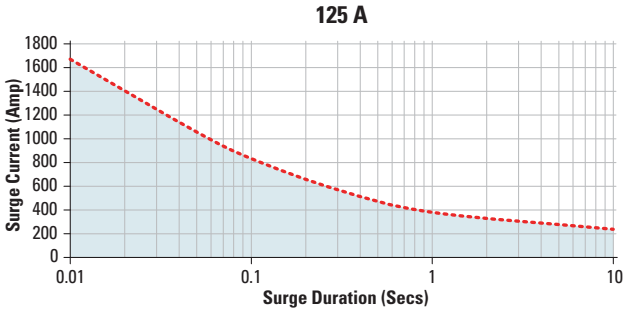

Non repetitive peak surge current at Tj initial 40ºC.

Copyright © 2016 Crydom Inc. Specifications subject to change without notice.

THERMAL DERATE INFORMATION

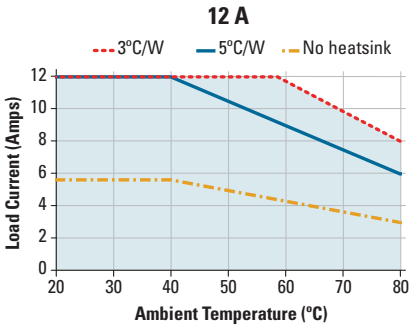

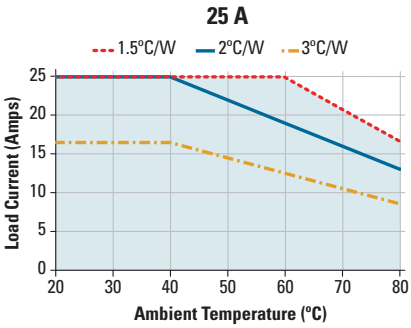

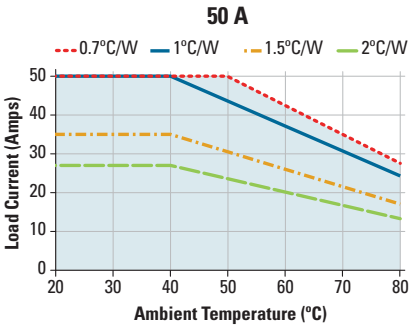

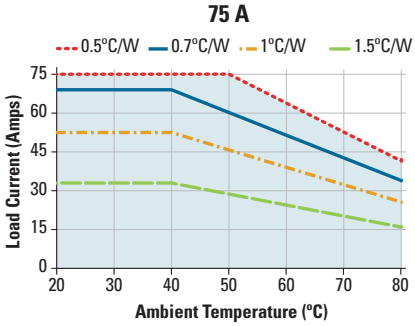

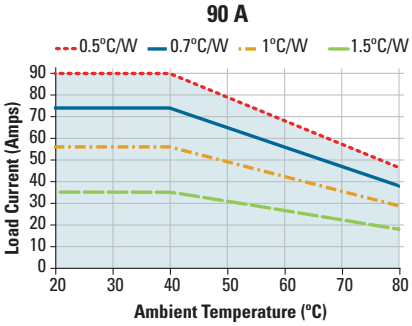

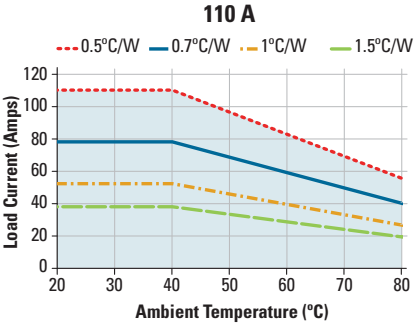

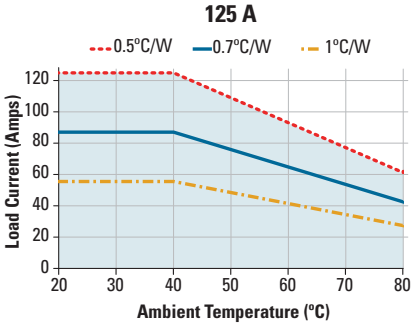

Copyright © 2016 Crydom Inc. Specifications subject to change without notice.

AGENCY APPROVALS

Designed in accordance with the requirements of IEC 62314
IEC 61000-4-2 : Electrostatic Discharge – Level 3
IEC 61000-4-4 : Electrically Fast Transients – Level 3
IEC 61000-4-5 : Electrical Surges – Level 3
IEC 600068-2-6: Vibration 0.33mm and 0.75mm Amplitude over 10-55 Hz
IEC 600068-2-27: Shock Resistance 15g/11ms

c UL us E116949
E116950 (110 and 125A models)

CSA LR81689 (except 12, 110 and 125A models)

VDE 10143 UG

CE

RoHS

ACCESORIES

New Accessories!
Protective Cover & Hardware Kits

Protective Cover
Part number: KS101

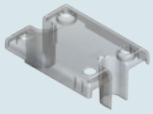

Clear plastic cover compatible with all new S1 designs. Safety covers provide added protection from electric shock when installing or checking equipment.

Hardware Kit
Part number: HK4

Bag with 2 square brass accessories and 2 screw 8-32 x 5/8 for output. Used to mount TMR1 lug terminals.

Recommended Accessories

Cover	Hardware Kit	Heat Sink Part No.	Thermal Resistance [°C/W]	Lug Terminal	Thermal Pad
KS101	HK1	HS501DR	5.0	TRM1	HSP-1
	HK4	HS301 / HS301DR	3.0	TRM6	HSP-2
		HS251	2.5		
		HS202 / HS202DR	2.0		
		HS201 / HS201DR	2.0		
		HS172	1.7		
		HS151 / HS151DR	1.5		
		HS122 / HS122DR	1.2		
		HS103 / HS103DR	1.0		
		HS101	1.0		
		HS073	0.7		
		HS072	0.7		
		HS053	0.5		
		HS033	0.36		
		HS023	0.25		

Rev. 040716

Copyright © 2016 Crydom Inc. Specifications subject to change without notice.

DANGER / PELIGRO / DANGER /GEFAHR / PERICOLO / 危险

HAZARD OF ELECTRIC SHOCK, EXPLOSION, OR ARC FLASH.

- Disconnect all power before installing or working with this equipment.
- Verify all connections and replace all covers before turning on power.

Failure to follow these instructions will result in death or serious injury.

RIESGO DE DESCARGA ELECTRICA O EXPLOSION.

- Desconectar todos los suministros de energia a este equipo antes de trabajar con este equipo.
- Verificar todas las conexiones y colocar todas las tapas antes de energizer el equipo.

El incumplimiento de estas instrucciones puede provocar la muerte o lesiones serias.

RISQUE DE DESCHARGE ELECTRIQUE OU EXPLOSION

- Eteindre toutes les sources d'énergie de cet appareil avant de travailler dessus de cet appareil
- Vérifier tous connections, et remettre tous couverts en olace avant de mettre sous

De non-suivi de ces instructions provoquera la mort ou des lésions sérieuses sérieuses.

GEFAHR EINES ELEKTRISCHE N SCHLAGES ODER EINER EXPLOSION.

- Stellen Sie jeglichen Strom ab, der dieses Gerät versorgt, bevor Sie an dem Gerät Arbeiten durchführen
- Vor dem Drehen auf Energie alle Anschlüsse überprüfen und alle Abdeckungen ersetzen.

Unterlassung dieser Anweisungen können zum Tode oder zu schweren Verletzungen führen.

RISCHIO DI SCOSSA ELETTRICA O DELL'ESPLOSIONE.

- Spenga tutta l'alimentazione che fornisce questa apparecchiatura prima di lavorare a questa apparecchiatura
- Verificare tutti i collegamenti e sostituire tutte le coperture prima dell'accensione

L'omissione di queste istruzioni provocherà la morte o lesioni serie

存在电击、爆炸或电弧闪烁危险

- 在操作此设备之前请先关闭电源。

若不遵守这些说明，可能会导致严重的人身伤害甚至死亡。

WARNING / AVERTISSEMENT / WARNUNG /ADVERTENCIA / AVVERTENZA / 警告

RISK OF MATERIAL DAMAGE AND HOT ENCLOSURE

- The product's side panels may be hot, allow the product to cool before touching.
- Follow proper mounting instructions including torque values.
- Do not allow liquids or foreign objects to enter this product.

Failure to follow these instructions can result in serious injury, or equipment damage.

RISQUE DE DOMMAGE MATERIEL ET DE SURCHAUFFE DU BOITIER

- Les panneaux latéraux du produit peuvent être chauds. Laisser le produit refroidir avant de le toucher.
- Respecter les consignes de montage, et notamment les couples de serrage.
- Ne pas laisser pénétrer de liquide ni de corps étrangers à l'intérieur du produit.

Le non-respect de cette directive peut entraîner, des lésions corporelles graves ou des dommages matériels.

GEFAHR VON MATERIALSCHÄDEN UND GEHÄUSEERHITZUNG

- Die Seitenwände können heiß sein. Lassen Sie das Produkt abkühlen, bevor Sie es berühren.
- Beachten Sie die Montageanweisungen,
- Führen Sie keine Flüssigkeiten oder Fremdkörper in das Produkt ein.

Die Nichtbeachtung dieser Anweisung kann Körperverletzung oder Materialschäden zur Folge haben.

RIESGO DE DAÑOS MATERIALES Y DE SOBRECALENTAMIENTO DE LA UNIDAD

- Los paneles laterales del producto pueden estar calientes. Esperar que el producto se enfríe antes de tocarlo.
- Respetar las instrucciones de montaje, y en particular los pares de apretado.
- No dejar que penetren líquidos o cuerpos extraños en el producto.

Si no se respetan estas precauciones pueden producirse graves lesiones, daños materiales.

RISCHIO DI DANNI MATERIALI E D'INVOLUCRO CALDO

- I pannelli laterali dell'apparecchio possono scottare; lasciar quindi raffreddare il prodotto prima di toccarlo.
- Seguire le istruzioni di montaggio corrette.
- Non far entrare liquidi o oggetti estranei in questo apparecchio.

La mancata osservanza di questa precauzione può causare gravi rischi per l'incolumità personale o danni alle apparecchiature.

材料损坏和高温外壳的危险性

- 产品的一侧面板可能很热，在其冷却前请不要触碰。
- 遵照正确的安装说明，包括扭矩值。
- 请勿让液体及其他异物进入本产品。

如不能正确执行这些操作说明，极有可能造成严重人体伤害或者设备的损坏。

Copyright © 2016 Crydom Inc. Specifications subject to change without notice.

ANNEX - ENVIROMENTAL INFORMATION

The environmental information disclosed in this annex including the EIP Pollution logo are in compliance with People's Republic of China Electronic Industry Standard SJ/T11364 – 2006, Marking for Control of Pollution Caused by Electronic Information Products.

Part Name	Toxic or hazardous Substance and Elements					
	Lead (Pb)	Mercury (Hg)	Cadmium (Cd)	Hexavalent Chromium (Cr (VI))	Polybrominated biphenyls (PBB)	Polybrominated diphenyl ethers (PBDE)
Semiconductor die	X	O	O	O	O	O
Solder	X	O	O	O	O	O

附件 – 环保信息

此附件所标示的包括电子信息产品污染图标的环保信息符合中华人民共和国电子行业标准 SJ/T11364 - 2006, 电子信息产品污染控制标识要求。

部件名称	有毒有害物质或元素					
	铅 (Pb)	汞 (Hg)	镉 (Cd)	六价铬 (Cr (VI))	多溴联苯 (PBB)	多溴二苯醚 (PBDE)
半导体芯片	X	O	O	O	O	O
焊接点	X	O	O	O	O	O

Copyright © 2016 Crydom Inc. Specifications subject to change without notice.

Общество с ограниченной ответственностью «МосЧип» ИНН 7719860671 / КПП 771901001
Адрес: 105318, г.Москва, ул.Щербаковская д.3, офис 1107

Данный компонент на территории Российской Федерации

Вы можете приобрести в компании MosChip.

Для оперативного оформления запроса Вам необходимо перейти по данной ссылке:

http://moschip.ru/get-element

Вы можете разместить у нас заказ для любого Вашего проекта, будь то серийное производство или разработка единичного прибора.

В нашем ассортименте представлены ведущие мировые производители активных и пассивных электронных компонентов.

Нашей специализацией является поставка электронной компонентной базы двойного назначения, продукции таких производителей как XILINX, Intel (ex.ALTERA), Vicor, Microchip, Texas Instruments, Analog Devices, Mini-Circuits, Amphenol, Glenair.

Сотрудничество с глобальными дистрибьюторами электронных компонентов, предоставляет возможность заказывать и получать с международных складов практически любой перечень компонентов в оптимальные для Вас сроки.

На всех этапах разработки и производства наши партнеры могут получить квалифицированную поддержку опытных инженеров.

Система менеджмента качества компании отвечает требованиям в соответствии с ГОСТ Р ИСО 9001, ГОСТ РВ 0015-002 и ЭС РД 009

Офис по работе с юридическими лицами:

105318, г.Москва, ул.Щербаковская д.3, офис 1107, 1118, ДЦ «Щербаковский»

Телефон: +7 495 668-12-70 (многоканальный)

Факс: +7 495 668-12-70 (доб.304)

E-mail: info@moschip.ru

Skype отдела продаж:
moschip.ru
moschip.ru_4
moschip.ru_6
moschip.ru_9