# Global Connection Systems Catalog

## Table of Contents

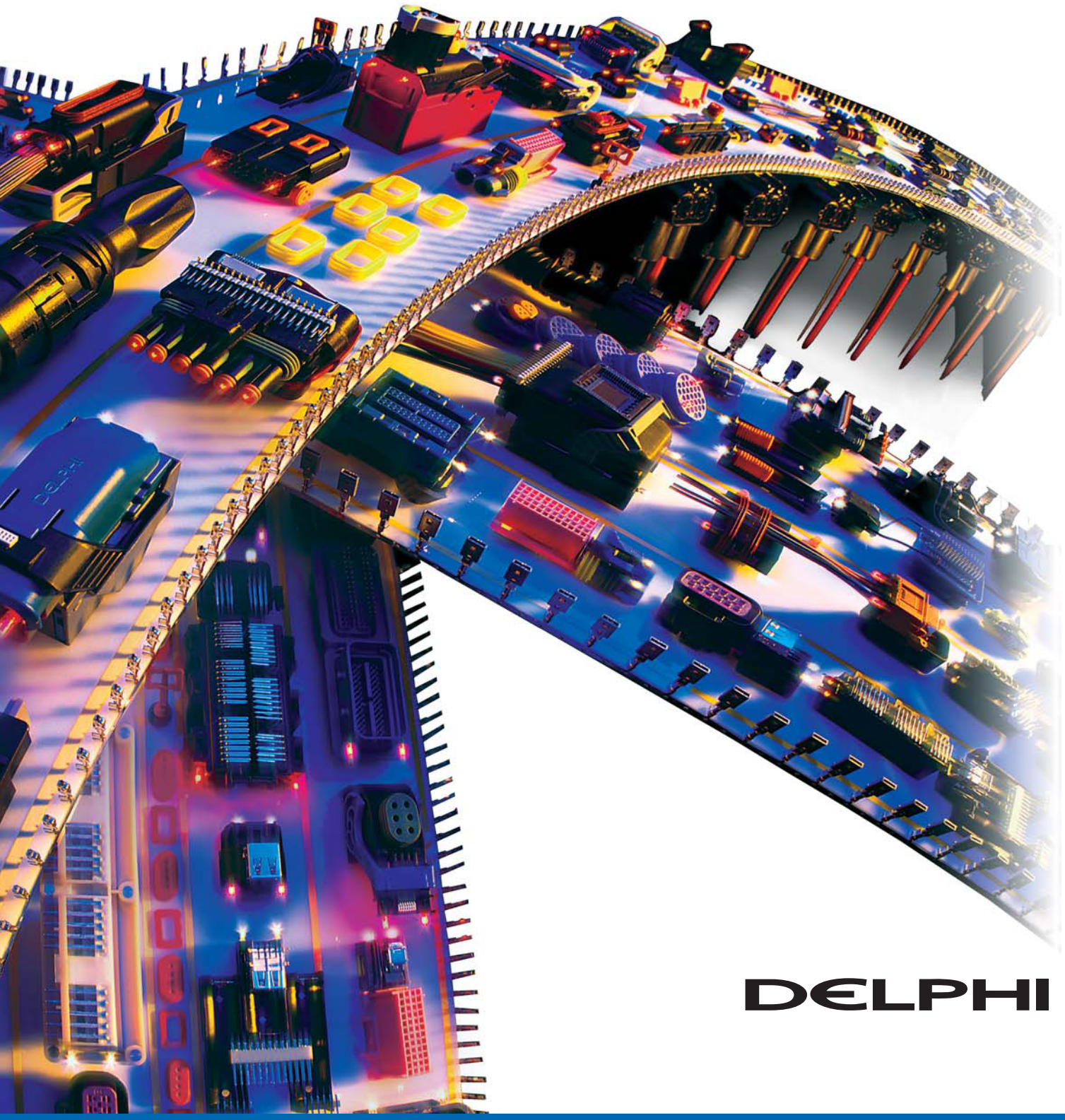

DELPHI

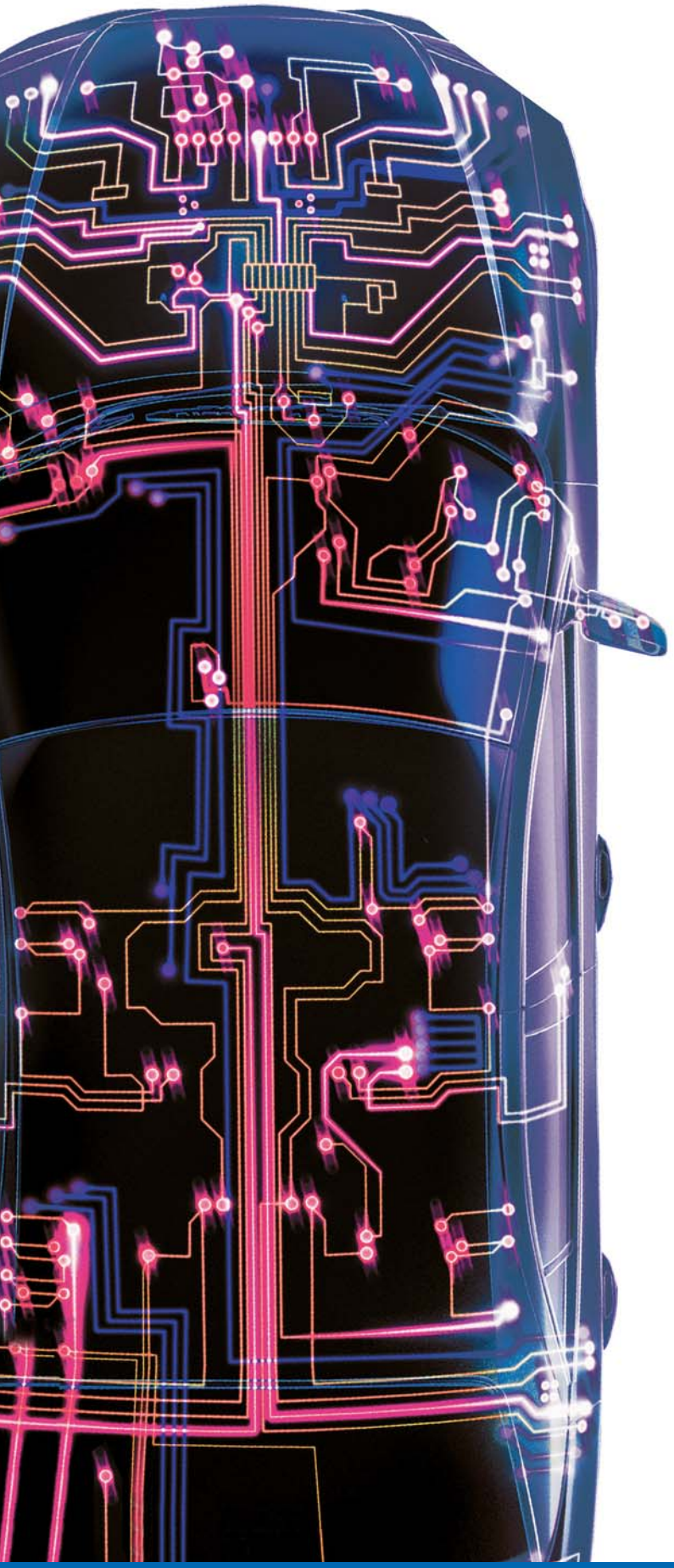

As a global leader in vehicle electrical and electronic connection systems, Delphi offers full-service integration — designing, engineering and manufacturing a comprehensive line of high-quality and innovative connection products and systems.

http://connectors.delphi.com

# Delphi
# Global Connection Systems Catalog

Delphi Connection Systems is proud to introduce the latest edition of the Global Connection Systems Catalog. To assist you in clear product selection, we provide two selection guides.

The "**Product Family Selection Guide**" (pages *1.6* and *1.7*) serves as an overview of the different product families and their major design features. This will assist you in determining which product family best suits your needs.

The "**Product Family Features Guide**" (pages *1.8* and *1.9*) identifies specific functional attributes and descriptions associated with each product family.

The remainder of the catalog is divided by section according to product family. Each section has its own sidebar tab with product name for quick reference. Within each section, two pages depict a typical connection system family and associated technical information. To help you select a complete connection system, each section depicts all of the individual components required to form complete systems. Each complete connection system is pictured in the orientation in which it is assembled and includes not only major component dimensions but overall mated lengths.

Listed below is contact information for Delphi's **Customer Center** to help you with product ordering or additional information. In addition, Delphi's regional headquarters' contact information is listed on the back cover.

DELPHI

World Headquarters & Customer Center
Mail Code 483.400.306
5725 Delphi Drive
Troy, Michigan 48098-2815 U.S.A.
Tel: [1] 248.813.2334
Fax: [1] 248.813.2333

This 2006 Global Connection Systems Catalog contains information and application guidelines for a representative sample of the available Delphi products. These products are subjected to extensive mechanical, electrical, and environmental testing procedures to assure superior quality and performance.

We have made every effort to ensure that the information contained in this document is accurate; however, changes are often made to update our specifications, part numbers, or introduce new product families. An application or sales engineer can help you determine which product best suits your application guidelines. Our global engineering, manufacturing network, and distribution capabilities are available to help you select the most suitable product.

We recommend that you use this catalog as a guide only. For additional part numbers and specifications contact your sales account manager or call your regional support representative at the number listed on the back cover.

Specifications subject to change without notice.

# Table of Contents


*Introduction* . . . . . *i.1*

*Product Family Selection Guide* . . . . . *i.6*

*Product Family Features* . . . . . *i.8*

**1. GT Series**

150 . . . . . 1.2
280 . . . . . 1.14
Mixed . . . . . 1.24
Lever Locks . . . . . 1.32

**2. Metri-Pack Series**

150 . . . . . 2.2
280 . . . . . 2.23
480 . . . . . 2.41
630 . . . . . 2.51
800 . . . . . 2.61
Mixed . . . . . 2.67
Junction . . . . . 2.79
Headers . . . . . 2.97

**3. Micro-Pack Series**

100 In-Line . . . . . 3.2
100 Header . . . . . 3.8
100W Header . . . . . 3.24

**4. 064 Header Series**

Overview . . . . . 4.2
064 Unsealed Header . . . . . 4.8
Mixed Unsealed Header . . . . . 4.48
Mating Components . . . . . 4.50

**5. Ducon Series**

0.8 . . . . . 5.2
1.5 . . . . . 5.6
2.8 . . . . . 5.10
4.8 . . . . . 5.14
6.3 . . . . . 5.16
Mixed . . . . . 5.20
Door Connectors . . . . . 5.24


**GT Series** features tangless terminals and one of the lowest connector engage forces in the industry. Designed for both 1.50 and 2.80mm applications, GT also offers unsealed female USCAR footprint compliant versions.

**Metri-Pack** is a family of electrical connection systems which utilizes internationally standardized male blade sizes, allowing for flexibility in design. Blade widths range from 1.5 mm to 8 mm with maximum current ratings of 14 to 60 amps.

**Micro-Pack Series** electronic connectors are designed to meet the needs of low energy, high density applications.

**064 Series** unsealed header connectors and mating components meet USCAR design guidelines and interface footprints.

**Ducon Series** utilizes two-piece terminals that provide superior mechanical and electrical performance in a complete range of terminal sizes.

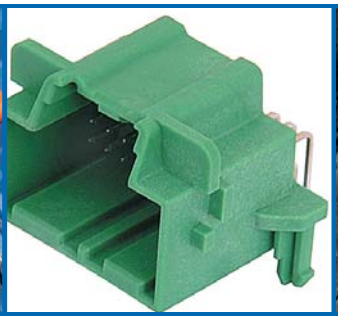

**6. Special Products**
Lamp Sockets . . . . . 6.2
Splice Savers . . . . . 6.10
Weather-Pack . . . . . 6.16
VF Connections . . . . . 6.22
DS Connections . . . . . 6.26

**7. Electrical Centers**
Modular . . . . . 7.2
Traditional . . . . . 7.16
Device Connections . . . . . 7.26

**8. Temperature Sensors . . . . . 8.1**

**9. Supplemental Products**
Ring Terminals . . . . . 9.2
Battery/Heavy Duty Terminals . . . . . 9.4
Cable Seals and Cavity Plugs . . . . . 9.8
56 Series Device Connections . . . . . 9.10
Clips . . . . . 9.13
Connector Carriers . . . . . 9.16

**10. Application Tooling . . . . . 10.1**

*Glossary . . . . . 11.1*
*Index . . . . . 11.2*

**Special Products** offer comprehensive and diverse product lines ranging from lamp sockets to device connections, featuring sophisticated connection systems technology.

**Electrical Centers** provide a centralized location for electrical power and signal distribution and its associated circuit protection – combining fuses, relays and interconnects.

**Temperature Sensors** are offered in a variety of vehicle applications to meet OEM specifications.

**Supplemental Products** are a broad selection of product lines that utilize state-of-the-art crimp, interface and sealing technologies, along with clips and connector carriers to provide positive positioning of components.

**Application Tooling** features automatic and hand tool terminal application systems, including presses, dies, and various popular hand tools.

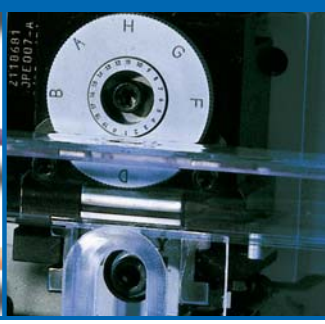

## Experience

Delphi Connection Systems is a world leader in supplying vehicle power and signal distribution systems, with an unsurpassed reputation in the design, development, and manufacture of electrical and electronic connection systems and devices.

For more than 100 years, Delphi has been at the forefront of delivering advanced technologies to the vehicle and its occupants. We have a long history of automotive achievement including many industry firsts, from environmental issues to vehicle performance and safety.

Our innovative products exceed the most strenuous performance requirements and provide solid value to our customers. That kind of customer focus helps us work toward even greater product performance and *driving tomorrow's technology*.

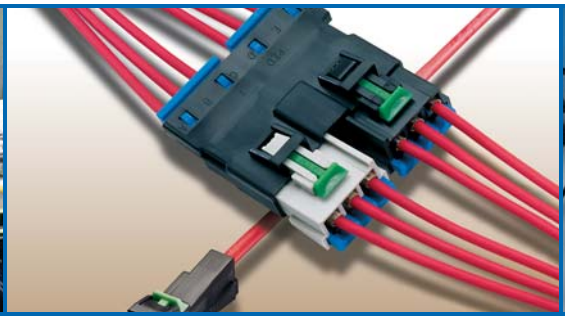

## Our Strength

With a worldwide workforce, Delphi provides both the advanced technical skills and hands-on logistical support to be a quality supplier of electrical and electronic systems architecture, and connection systems.

We work to develop partnerships with our customers to clearly identify their requirements and exceed their expectations. Our global teams are thorough, responsive, and customer-focused.

Our key is a global communication network linking all of our employees. By leveraging our resources and expertise regionally, we bring the solutions right to your door—wherever you may be.

DELPHI

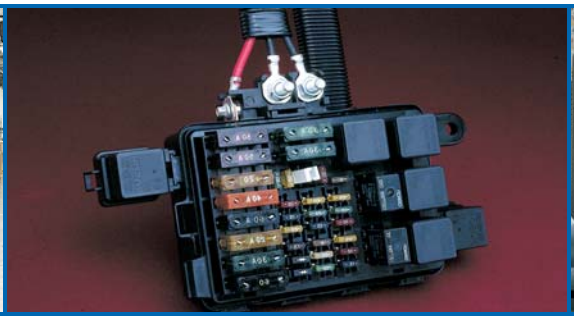

# Product Family Selection Guide

| | GT Series | GT Lever Lock | Metri-Pack | Junction Systems | Metri-Pack Headers | Micro-Pack | 064 Series | Ducon Series |
|---|---|---|---|---|---|---|---|---|
| Unsealed | ■ | ■ | ■ | ■ | ■ | ■ | ■ | ■ |
| Sealed | ■ | ■ | ■ | ■ | ■ | ■ | | ■ |
| Max. Continuous Current (amps) | | | | | | | | |
| Low | ■ | ■ | ■ | ■ | ■ | ■ | ■ | ■ |
| Medium | ■ | ■ | ■ | ■ | ■ | | | ■ |
| High | | | ■ | | | | | ■ |
| Tangless Terminals | ■ | ■ | ▲ | | ▲ | ▲ | ■ | |
| Secondary Terminal Lock or Primary Lock Reinforcement | ■ | ■ | ■ | ■ | ▲ | ■ | ■ | ■ |
| Secondary Connector Lock | ■ | ■ | ▲ | | ▲ | ▲ | ■ | |
| In-Line Connections | ■ | ■ | ■ | ■ | | ▲ | | ■ |
| Device Connections | ■ | ■ | ■ | | ■ | ■ | ■ | ■ |
| PC Board Connections | | | | | ■ | ■ | ■ | |
| Mechanical Assist | | ■ | ▲ | ■ | ▲ | ▲ | | ▲ |
| Conforms to ISO/ SAE Performance Requirements | ■ (USCAR) | ■ (USCAR) | ■ (USCAR) | ■ | ■ | ■ | ■ (USCAR) | ■ |
| Conforms to ISO/ SAE Blade Standards | ■ (USCAR) | ■ (USCAR) | ■ (USCAR) | ■ | ■ | ■ (Pin) | ■ (USCAR) | ■ |

■ Available ▲ This feature is available on some systems.

Use this as a general guide to find the Product Family to meet your product application needs.
See pages *i.8* and *i.9* for specific product line technical data.

| Lamp Sockets | Splice Savers | Weather-Pack | 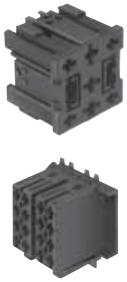 VF Connections | DS Connections | Electrical Centers | Temperature Sensors | 56 Series |
|---|---|---|---|---|---|---|---|
| ■ | ■ | | ■ | | ■ | ■ | ■ |
| ■ | ■ | ■ | | ■ | | ■ | |
| ■ | ■<br>■ | ■<br>■ | ■<br>■<br>▲ | ■<br>■ | ■<br>■<br>■ | ■ | ■<br>■<br>■ |
| | ▲ | | | | | ■ | |
| ▲ | ■ | ■ | ■ | ■ | ■ | ■ | |
| | | ▲ | | | | ■ | |
| | | ■ | | | | | |
| | | ■ | ■ | ■ | | | ■ |
| | | | | | | | |
| | | ▲ | | | | | |
| | ■ | ■ | ■ | ■ | ■ | ■ | |
| | ■ | | ■ | ■ | ■ | ■ | ■ |

# Product Family Features

| Product Family | Male Terminal Size Width x Thickness (mm) | Maximum Continuous Current* (AMPS) | Cable Range (mm²) | Functional Temperature Range (˚C) -40 to ... | `Low Energy Termination Resistance m @20mV |
|---|---|---|---|---|---|
| GT Series | | | | | |
| 150 GT (3.5 Centerline) | 1.5 x 0.80 | 15 | 0.80-0.35 (SAE) 1.0-0.35 (DIN) | 125 | < 10 |
| 150 GT | 1.5 x 0.64 | 15 | 1.0-0.35 | 125 | < 10 |
| 280 GT | 2.8 x 0.64 | 25 | 5.0-0.35 | 125 | < 10 |
| GT Lever Lock (Mxd) | 1.5 x 0.64 2.8 x 0.64 | 15 - 25 | 5.0-0.35 | 125 | < 10 |
| Metri-Pack (M/P) | | | | | |
| 150.2 M/P Pull-To-Seat | 1.5 x 0.80 (Mating Blade) | 14 | 1.0-0.35 | 125 | < 10 |
| 280.1 M/P Pull-To-Seat | 2.8 x 0.80 (Mating Blade) | 30 | 1.0-0.35 | 125 | < 10 |
| 150 M/P | 1.5 x 0.80 | 14 | 1.0-0.35 | 125 | < 10 |
| 280 M/P | 2.8 x 0.80 | 30 | 5.0-0.35 | 125 | < 10 |
| 480 M/P | 4.8 x 0.80 | 42 | 5.0-0.35 | 125 | < 10 |
| 630 M/P | 6.3 x 0.80 | 46 | 5.0-0.35 | 125 | < 10 |
| 800 M/P | 8.0 x 0.80 | 60 | 8.0-2.0 | 125 | < 10 |
| Mixed M/P | 1.5, 2.8, 4.8, 6.3 x 0.80 | 14 - 46 | 5.0-0.35 | 125 | < 10 |
| Junctions M/P | 1.5, 2.8, 4.8, 6.3 x 0.80 | 14 - 46 | 5.0-0.35 | 125 | < 10 |
| 150 M/P Headers | 1.5 x 0.80 | 14 | 1.0-0.35 | 125 | < 10 |
| 280 M/P Headers | 2.8 x 0.80 | 30 | 5.0-0.35 | 125 | < 10 |
| Micro-Pack | | | | | |
| 100 | 1.0 Dia. | 5 | 1.0-0.35 | 85 | < 10 |
| 100W (Sealed) | 1.0 Dia. | 7.5 | 0.80-0.35 | 125 | < 10 |
| 064 Series | | | | | |
| Headers | 0.64 x 0.64 | 5 - 7 | 0.35 - 0.80 | 85 | < 20 |
| MicroHVT | 0.64 x 0.64 | 7 | 0.35 - 0.80 | 85 | < 20 |
| Micro64 | 0.64 x 0.64, 0.8 Dia. | 5 | 0.35 - 0.80 | 85 | < 20 |
| Ducon Series | | | | | |
| Ducon 0.8 | 0.8 | 15 | 1.0-0.5 | 135 | < 10 |
| Ducon 1.5 | 1.5 x 0.8 | 25 | 2.5-0.5 | 135 | < 10 |
| Ducon 2.8 | 2.8 x 0.8 | 33 | 2.5-0.5 | 135 | < 10 |
| Ducon 4.8 | 4.8 x 0.8 | 45 | 6.0-0.5 | 135 | < 10 |
| Ducon 6.3 | 6.3 x 0.8 | 55 | 6.0-1.5 | 135 | < 10 |
| Ducon Mixed | 1.5 x 0.8 2.8 x 0.8 4.8 x 0.8 | 15 25 45 | 2.5-0.5 | 135 | < 10 |
| Weather Pack | Pin and Sleeve | 20 | 3.0-0.35 | 125 | < 10 |
| Splice Savers | | | | | |
| 150 GT | 1.5 x 0.64 | 15 | 1.0-0.35 | 125 | < 10 |
| 280 M/P | 2.8 x 0.64 | 25 | 5.0-0.35 | 125 | < 10 |
| Lamp Sockets | – | 4 | 0.80-0.35 | 85 | – |
| VF Connections | | | | | |
| VF 2.8 | 2.8 x 0.80 | 19 | 2.5-0.5 | 125 | < 10 |
| VF 6.3 | 4.8 x 0.80 | 33 | 2.5-0.5 | 135 | < 10 |
| DS Connections | | | | | |
| DS 2.8 | 2.8 x 0.80 | 19 | 2.5-0.5 | 125 | < 10 |
| Temperature Sensors | 1.5 x 0.80 | 14 | 1.0-0.35 | 125 | < 10 |
| 56 Series | 6.3 x 0.80 | 49 | 5.0-0.22 | 125 | < 10 |

*The test data are based on single circuits in free space and were generated using a "Lumped Resistance" model.

Use this as a guide to find the specific product to meet your product application needs.

| Voltage Drop mV/amp | Centerline Spacing (mm) Unsealed | Centerline Spacing (mm) Sealed | Connector Material | Female Terminal Material (Plating) | Male Terminal Material (Plating) | Product Family |
|---|---|---|---|---|---|---|
| | | | | | | **GT Series** |
| < 10.0 | – | 3.5 | PA6 10% GF & 20% GB<br>PA66 HS IM, PBT 20% GF | Tin Brass (Tin) | Tin Brass (Tin) | 150 GT<br>(3.5 Centerline) |
| < 10.0 | 4.0 | 4.5 | PA6 10% GF & 20% GB, PBT 20% GF | Tin Brass (Tin) | Tin Brass (Tin) | 150 GT |
| < 4.0 | 5.5 | 6.5 | PA6 10% GF & 20% GB, PBT 20% GF | Tin Brass (Tin) | Tin Brass (Tin) | 280 GT |
| See Above | See Above | See Above | PA66 HS IM, PA66 HS IM 14% GF | Tin Brass (Tin) | Tin Brass (Tin) | GT Lever Lock (Mxd.) |
| | | | | | | **Metri-Pack (M/P)** |
| < 10.0 | – | 3.5 | PA66 HS IM | Silicon Bronze (Tin) | – | 150.2 M/P<br>Pull-To-Seat |
| < 3.0 | – | 5.0 | PA66 HS 33% GF, | Silicon Bronze (Tin) | – | 280.1 M/P<br>Pull-To-Seat |
| < 10.0 | 3.5 | 6.0 | PA66 HS IM, PA6<br>PBT, PBT 30% GF | Silicon Bronze (Tin) | Tin Brass (Tin) | 150 M/P |
| < 3.0 | 5.0 | 7.7 | PA66 HS IM, PA6, PA66 HS IM 14% GF<br>PBT, PBT IM, PBT 30% GF | Tin Brass (Tin) | Tin Brass (Tin) | 280 M/P |
| < 3.0 | 6.9 | 9.5 | PA66 HS IM, PA66 HS IM 25% GF | Tin Brass (Tin) | Tin Brass (Tin over Copper) | 480 M/P |
| < 3.0 | 8.5 | 10.8 | PA66 HS IM, PBT 30% GF | Tin Brass (Tin) | Tin Brass (Tin over Copper) | 630 M/P |
| < 3.0 | 10.3 | – | PA66 HS IM, PA6 | Tin Brass (Silver Nickel) | Tin Brass (Silver Nickel) | 800 M/P |
| See Above | See Above | See Above | See Above | See Above | See Above | Mixed M/P |
| See Above | See Above | See Above | See Above | See Above | See Above | Junctions M/P |
| < 10.0 | – | 4.0 | PBT 30% GF, PET 30% GF | Silicon Bronze (Tin) | Brass (Tin) | 150 M/P Headers |
| < 3.0 | 6.9 | – | PA66 HS IM, PBT 30% GF | Tin Brass (Tin) | Copper Alloy (Tin) | 280 M/P Headers |
| | | | | | | **Micro-Pack** |
| < 10.0 | 3.0 | – | PBT, PBT 30% GF, PA66 HS IM | Copper Nickel Alloy (Tin) | Tin Brass (Tin) | 100 |
| < 10.0 | – | 3.5 | PBT, PBT 30% GF | Phosphor Bronze (Gold) | Brass Wire (Gold) | 100W (Sealed) |
| | | | | | | **064 Series** |
| < 20.0 | 2.54 | – | PPA GF33 HS, PBT GF30 | _ | Brass (Tin) | Headers |
| < 20.0 | 2.54 | – | PBT GF30 | Tin Brass (Tin) | – | MicroHVT |
| < 20.0 | 2.54 | – | PBT GF30 | Tin Brass (Tin) | – | Micro64 |
| | | | | | | **Ducon Series** |
| < 4.0 | 3.0 | – | PA6, PA66 | Copper Nickel Silicon Alloy (Tin) | Copper Nickel Silicon Alloy (Tin) | Ducon 0.8 |
| < 4.0 | 4.5 | – | PA6 | Copper Nickel Silicon Alloy (Tin) | Copper Nickel Silicon Alloy (Tin) | Ducon 1.5 |
| < 4.0 | – | 6.0 | PA6 | Copper Nickel Silicon Alloy (Tin) | Copper Nickel Silicon Alloy (Tin) | Ducon 2.8 |
| < 4.0 | 6.8 | – | PA6 | Copper Nickel Silicon Alloy (Tin) | Copper Nickel Silicon Alloy (Tin) | Ducon 4.8 |
| < 4.0 | – | 10.8 | PA66 | Copper Nickel Silicon Alloy (Tin) | Copper Nickel Silicon Alloy (Tin) | Ducon 6.3 |
| < 4.0 | – | 6.0, 10.0 | PA66 | Copper Nickel Silicon Alloy (Tin) | Copper Nickel Silicon Alloy (Tin) | Ducon Mixed |
| < 3.0 | – | 7.7 | PA6, PA66 HS IM | Tin Brass (Tin) | Tin Brass (Tin) | **Weather Pack** |
| | | | | | | **Splice Savers** |
| < 10.0 | 3.4 | 4.5 | PA66 HS IM, PA66 HS IM 14% GF | Tin Brass (Tin) | Tin Brass (Tin) | 150 GT |
| < 5.0 | 5.0/6.3 | – | PA66 HS IM | Tin Brass (Tin) | Tin Brass (Tin) | 280 M/P |
| < 10.0 | – | – | PA66 HS IM, PA66 HS IM 14% GF,<br>PA66 HS IM 33% GF, PBT, PC | Tin Brass (Tin) | – | **Lamp Sockets** |
| | | | | | | **VF Connections** |
| < 4.0 | 5.0 | – | PA66 | Tin Brass (Bronze) | Tin Brass (Bronze) | VF 2.8 |
| < 4.0 | 8.0 | – | PA66 15% GF | Tin Brass (Bronze) | Tin Brass (Bronze) | VF 6.3 |
| | | | | | | **DS Connections** |
| < 4.0 | – | 5.0 | PA66 30% GF | Tin Brass (Bronze) | Tin Brass (Bronze) | DS 2.8 |
| < 10.0 | 3.5 | 3.5 | PBT 30% GF, PA6 10% GF &<br>20% GB, PEI 30% GF,<br>PA66 33% GF, PA6, PA66 HS IM | Tin Brass (Tin) | Annealed Stainless Steel<br>(Nickel) | **Temperature Sensors** |
| < 3.0 | 10.2 | – | PA66 HS IM, PP | Brass (Tin) | Brass (Tin) | **56 Series** |

Materials are standard for the designated product line, optional materials may be available.

# 150, 280 & Lever Lock

The GT Connection System features tangless terminals and offers one of the lowest connector engage forces in the industry. Designed for both 1.50 and 2.80mm blade width applications, GT achieves superior electrical performance that meets or exceeds all known customer requirements, including USCAR standards. The unsealed systems are available in cavity variations between 2-way and 16-way. To maintain world class ergonomics, Delphi introduced the GT Lever Lock series. This series provides connector mating forces of less than 50 Newtons for up to 40 terminations per connector.

The sealed GT Connection System utilizes a new two-rib cable seal. This seal is smaller and uses less material than traditional three rib seal designs without impacting performance. The sealed systems are available in cavity variations between 2-way and 16-way. To maintain world class ergonomics, Delphi introduced the sealed GT Lever Lock series. This series provides connector mating forces of less than 50 Newtons for up to 40 terminations per connector.

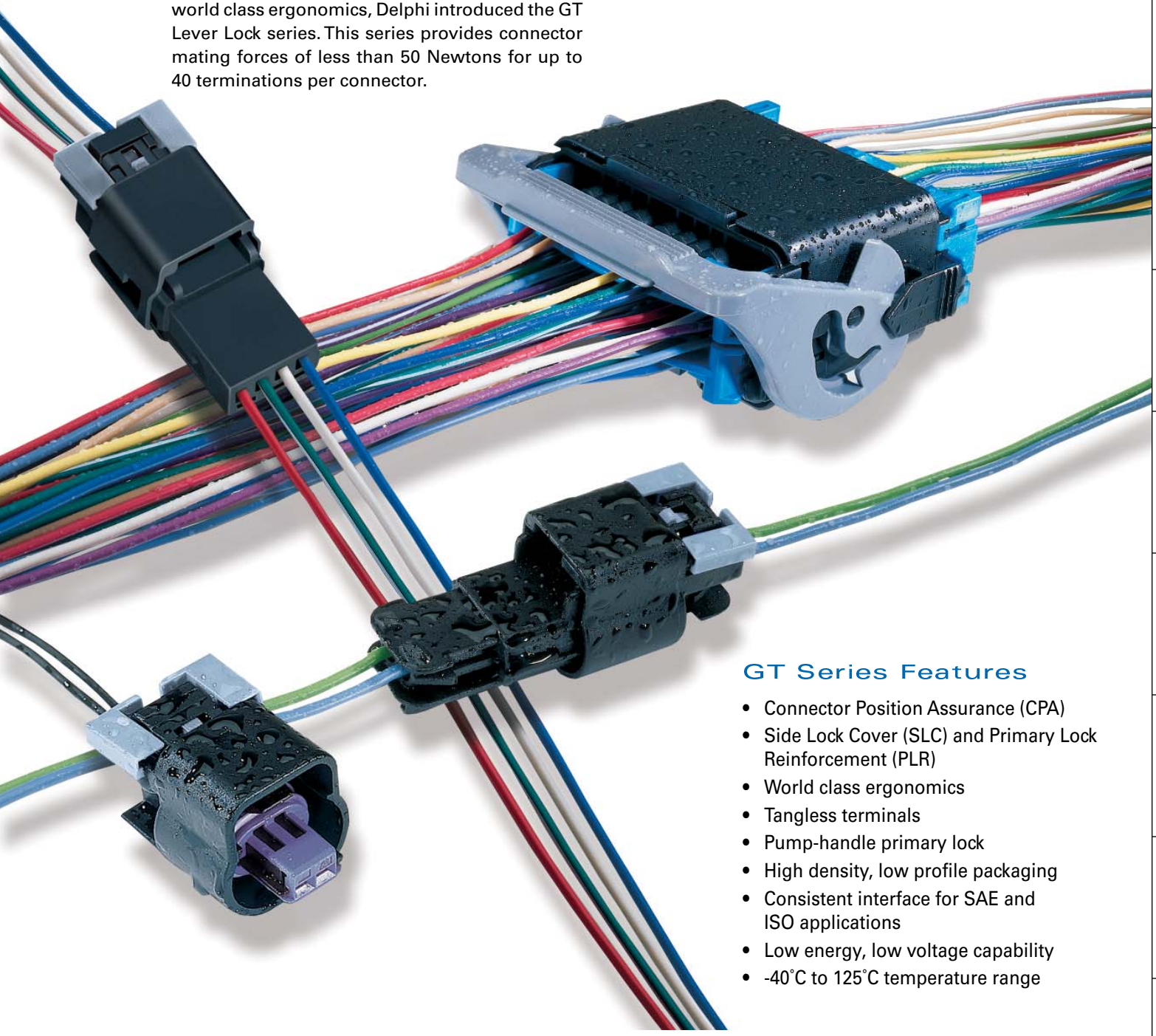

## GT Series Features

- Connector Position Assurance (CPA)
- Side Lock Cover (SLC) and Primary Lock Reinforcement (PLR)
- World class ergonomics
- Tangless terminals
- Pump-handle primary lock
- High density, low profile packaging
- Consistent interface for SAE and ISO applications
- Low energy, low voltage capability
- -40˚C to 125˚C temperature range

# 150

## Cross Sectional View

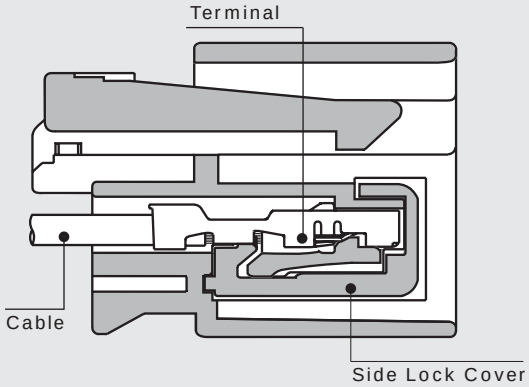


**Female Connector Assembly**

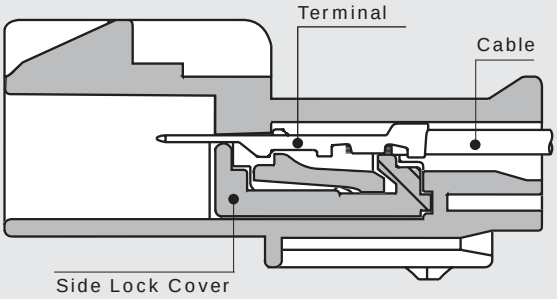


**Male Connector Assembly**

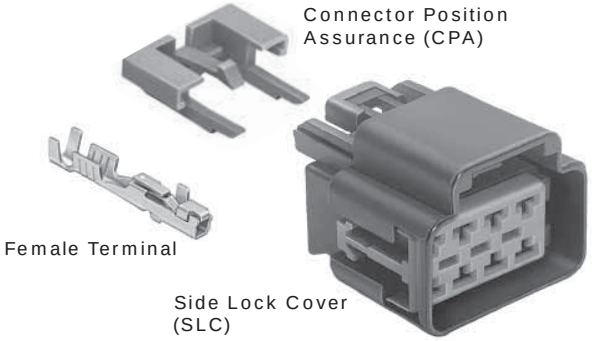


**Female Connector Assembly**

### GT 150 Female Terminals Unsealed

| Part # | Cable Range (mm²) | Material | Plating |
|---|---|---|---|
| 12191811 | 0.50-0.35 | Tin Brass | Tin |
| 12191812 | 1.00-0.75 | Tin Brass | Tin |
| 13526680* | 0.50-0.35 | Tin Brass | Tin |
| 13526678* | 1.00-0.75 | Tin Brass | Tin |

*For use with USCAR applications only.

### GT 150 Female Connector Assemblies Unsealed USCAR Footprint

| USCAR # * | Delphi Part # | Color | Material |
|---|---|---|---|
| 150-U-002-1-A01 | 13586106 | Black | PBT 20% GF |
| 150-U-003-1-A01 | 13586110 | Black | PBT 20% GF |
| 150-U-004-1-A01 | 13586114 | Black | PBT 20% GF |
| 150-U-004-2-A01 | 13586118 | Black | PBT 20% GF |
| 150-U-005-1-A01 | 13586122 | Black | PBT 20% GF |
| 150-U-006-1-A01 | 13586126 | Black | PBT 20% GF |
| 150-U-006-2-A01 | 13586130 | Black | PBT 20% GF |
| 150-U-008-2-A01 | 13586134 | Black | PBT 20% GF |
| 150-U-010-2-A01 | 13583664 | Black | PBT 20% GF |
| 150-U-012-2-A01 | 13586138 | Black | PBT 20% GF |
| 150-U-016-2-A01 | 13520382 | Black | PBT 20% GF |

*Other USCAR indexes are also available.

### GT 150 Female Connector Assemblies Unsealed

| # Cavities | Connector | Color | Material |
|---|---|---|---|
| 2 | 15332129 | Black | PA6 10% GF & 20% GB |
| 3 | 15332132 | Black | PA6 10% GF & 20% GB |
| 4 | 15332135 | Black | PA6 10% GF & 20% GB |
| 5 | 15332138 | Black | PA6 10% GF & 20% GB |
| 6 | 15332141 | Black | PA6 10% GF & 20% GB |
| 8 | 13521472 | Black | PBT 20% GF |
| 10 | 15459918 | Black | PBT 20% GF |
| 12 | 15459912 | Black | PBT 20% GF |
| 14 | 13521476 | Black | PBT 20% GF |
| 16 | 13516905 | Black | PBT 20% GF |

Side Lock Covers (SLC) are included in the Connector Assemblies listed in this section.

**NOTE:** Specifications in this catalog are for general reference only and are subject to change without notice. To verify product information, please contact a Delphi representative.

# 150

## Unsealed System Application Information

### GT 150 Series Terminals – Tin Plated

CABLE RANGE (mm²): ..... 0.35-1.0

CURRENT RANGE (AMPS): ..... 0-15

TEMP RANGE °C: ..... -40 to 125

RESISTANCE: ..... <10mΩ@20mV

VOLTAGE DROP: .... <10.0mV/amp

CENTERLINE SPACING (mm): ..... 4.0

BLADE WIDTH (mm): ..... 1.5

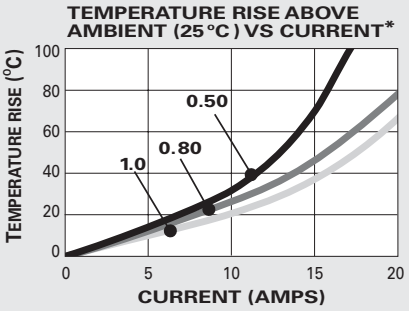


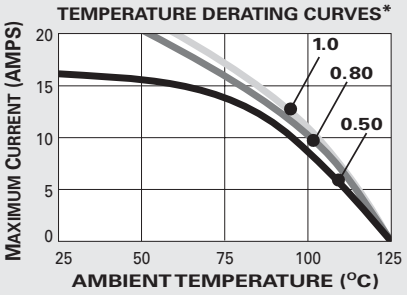


*The test data are based on single circuits in free space and were generated using a "Lumped Resistance" model. This model does not account for all of the variables that would be present in an actual application. For actual product performance, contact your regional support representative.

**Male Connector Assembly**

### GT 150 Male Connector Assemblies Unsealed

| # Cavities | Connector | Color | Material |
|---|---|---|---|
| 2 | 15332130 | Black | PA6 10% GF & 20% GB |
| 3 | 15332133 | Black | PA6 10% GF & 20% GB |
| 4 | 15332136 | Black | PA6 10% GF & 20% GB |
| 5 | 15332139 | Black | PA6 10% GF & 20% GB |
| 6 | 15332142 | Black | PA6 10% GF & 20% GB |
| 8 | 13521474 | Black | PBT 20% GF |
| 10 | 15459917 | Black | PBT 20% GF |
| 12 | 15459913 | Black | PBT 20% GF |
| 14 | 13521478 | Black | PBT 20% GF |
| 16 | 13516907 | Black | PBT 20% GF |

Side Lock Covers (SLC) are included in the Connector Assemblies listed in this section.

### GT 150 Male Terminals Unsealed

| Part # | Cable Range (mm²) | Material | Plating |
|---|---|---|---|
| 15304701 | 0.50-0.35 | Tin Brass | Tin |
| 15304702 | 1.00-0.75 | Tin Brass | Tin |

**SECTION NOTES:**

- Due to rigid tolerances of connector cavities, it is critical to meet all crimp dimensions as specified.

**NOTE:** Specifications in this catalog are for general reference only and are subject to change without notice. To verify product information, please contact a Delphi representative.

# 150

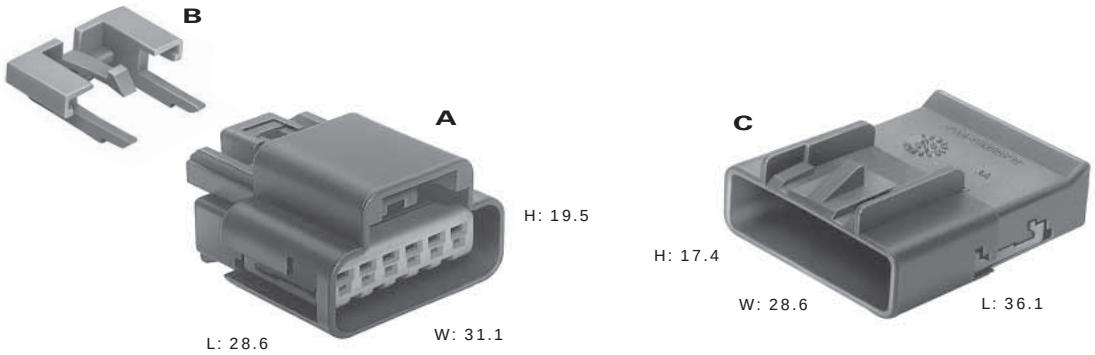


Total Mated Length: 52.1mm

## A. Part No: 15332129

| | |
|---|---|
| Description: | Connector Assembly 2F |
| Size: | 28.6L x 19.5H x 15.1W |
| Color: | Black |
| Material: | PA6 10% GF & 20% GB |
| Terminals: | See Page 1.2 |

## Part No: 15332132

| | |
|---|---|
| Description: | Connector Assembly 3F |
| Size: | 28.6L x 19.5H x 19.1W |
| Color: | Black |
| Material: | PA6 10% GF & 20% GB |
| Terminals: | See Page 1.2 |

## Part No: 15332135

| | |
|---|---|
| Description: | Connector Assembly 4F |
| Size: | 28.6L x 19.5H x 23.1W |
| Color: | Black |
| Material: | PA6 10% GF & 20% GB |
| Terminals: | See Page 1.2 |

## Part No: 15332138

| | |
|---|---|
| Description: | Connector Assembly 5F |
| Size: | 28.6L x 19.5H x 27.1W |
| Color: | Black |
| Material: | PA6 10% GF & 20% GB |
| Terminals: | See Page 1.2 |

## Part No: 15332141

| | |
|---|---|
| Description: | Connector Assembly 6F |
| Size: | 28.6L x 19.5H x 31.1W |
| Color: | Black |
| Material: | PA6 10% GF & 20% GB |
| Terminals: | See Page 1.2 |

## B. Part No: 15317832

| | |
|---|---|
| Description: | CPA |
| Color: | Gray |
| Material: | PA6 10% GF & 20% GB |

## C. Part No: 15332130

| | |
|---|---|
| Description: | Connector Assembly 2M |
| Size: | 36.1L x 17.4H x 12.6W |
| Color: | Black |
| Material: | PA6 10% GF & 20% GB |
| Terminals: | See Page 1.3 |

## Part No: 15332133

| | |
|---|---|
| Description: | Connector Assembly 3M |
| Size: | 36.1L x 17.4H x 16.6W |
| Color: | Black |
| Material: | PA6 10% GF & 20% GB |
| Terminals: | See Page 1.3 |

## Part No: 15332136

| | |
|---|---|
| Description: | Connector Assembly 4M |
| Size: | 36.1L x 17.4H x 20.6W |
| Color: | Black |
| Material: | PA6 10% GF & 20% GB |
| Terminals: | See Page 1.3 |

## Part No: 15332139

| | |
|---|---|
| Description: | Connector Assembly 5M |
| Size: | 36.1L x 17.4H x 24.6W |
| Color: | Black |
| Material: | PA6 10% GF & 20% GB |
| Terminals: | See Page 1.3 |

## Part No: 15332142

| | |
|---|---|
| Description: | Connector Assembly 6M |
| Size: | 36.1L x 17.4H x 28.6W |
| Color: | Black |
| Material: | PA6 10% GF & 20% GB |
| Terminals: | See Page 1.3 |

**NOTE:** Specifications in this catalog are for general reference only and are subject to change without notice. To verify product information, please contact a Delphi representative.

# 150

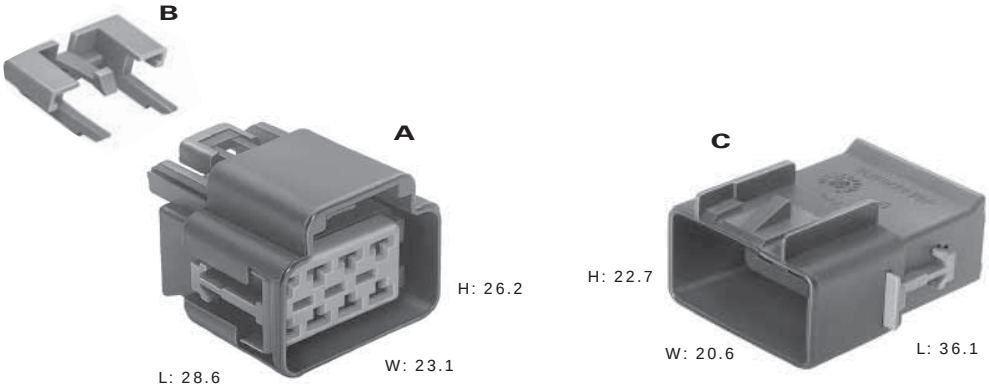


Total Mated Length: 52.1mm

### A. Part No: 13521472

| | |
|---|---|
| Description: | Connector Assembly 8F |
| Size: | 28.6L x 26.2H x 23.1W |
| Color: | Black |
| Material: | PBT 20% GF |
| Terminals: | See Page 1.2 |

### Part No: 15459918

| | |
|---|---|
| Description: | Connector Assembly 10F |
| Size: | 28.6L x 26.2H x 27.1W |
| Color: | Black |
| Material: | PBT 20% GF |
| Terminals: | See Page 1.2 |

### Part No: 15459912

| | |
|---|---|
| Description: | Connector Assembly 12F |
| Size: | 28.6L x 26.2H x 31.1W |
| Color: | Black |
| Material: | PBT 20% GF |
| Terminals: | See Page 1.2 |

### Part No: 13521476

| | |
|---|---|
| Description: | Connector Assembly 14F |
| Size: | 28.6L x 26.2H x 35.1W |
| Color: | Black |
| Material: | PBT 20% GF |
| Terminals: | See Page 1.2 |

### Part No: 13516905

| | |
|---|---|
| Description: | Connector Assembly 16F |
| Size: | 28.6L x 26.2H x 39.1W |
| Color: | Black |
| Material: | PBT 20% GF |
| Terminals: | See Page 1.2 |

### B. Part No: 15317832

| | |
|---|---|
| Description: | CPA |
| Color: | Gray |
| Material: | PA6 10% GF & 20% GB |

### C. Part No: 13521474

| | |
|---|---|
| Description: | Connector Assembly 8M |
| Size: | 36.1L x 22.7H x 20.6W |
| Color: | Black |
| Material: | PBT 20% GF |
| Terminals: | See Page 1.3 |

### Part No: 15459917

| | |
|---|---|
| Description: | Connector Assembly 10M |
| Size: | 36.1L x 22.7H x 24.6W |
| Color: | Black |
| Material: | PBT 20% GF |
| Terminals: | See Page 1.3 |

### Part No: 15459913

| | |
|---|---|
| Description: | Connector Assembly 12M |
| Size: | 36.1L x 22.7H x 28.6W |
| Color: | Black |
| Material: | PBT 20% GF |
| Terminals: | See Page 1.3 |

### Part No: 13521478

| | |
|---|---|
| Description: | Connector Assembly 14M |
| Size: | 36.1L x 22.7H x 32.6W |
| Color: | Black |
| Material: | PBT 20% GF |
| Terminals: | See Page 1.3 |

### Part No: 13516907

| | |
|---|---|
| Description: | Connector Assembly 16M |
| Size: | 36.1L x 22.7H x 36.6W |
| Color: | Black |
| Material: | PBT 20% GF |
| Terminals: | See Page 1.3 |

**NOTE:** Specifications in this catalog are for general reference only and are subject to change without notice. To verify product information, please contact a Delphi representative.

# 150

## Cross Sectional View

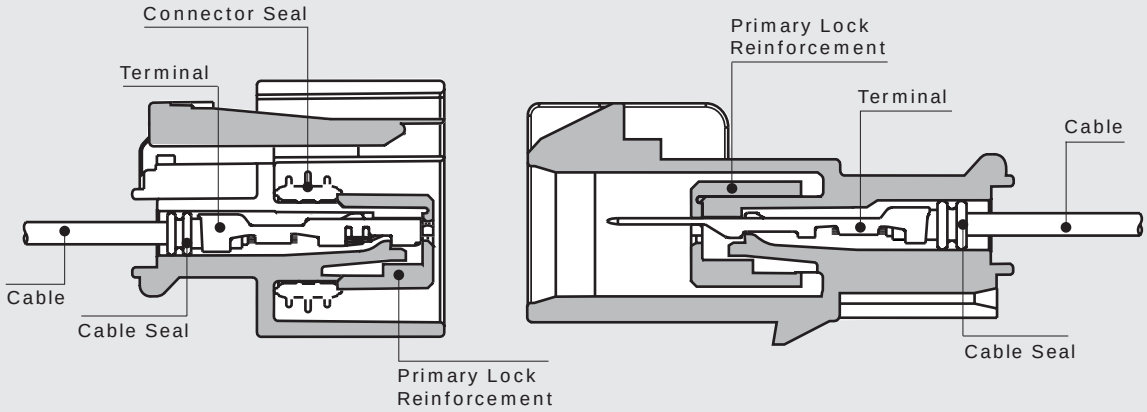


**Female Connector Assembly** **Male Connector Assembly**

### GT 150 Female Terminals Sealed

| Part # | Cable Range (mm²) | Material | Plating |
|---|---|---|---|
| 12191818 | 0.50-0.35 | Tin Brass | Tin |
| 12191819 | 1.00-0.75 | Tin Brass | Tin |

### GT 150 Cable Seals

| Reel Part # | Loose Part # | Cable Diameter | Material | Color |
|---|---|---|---|---|
| 12191152 | 15366021 | 1.20-1.90 | Silicone | White |
| 12191153 | 15366060 | 1.86-2.40 | Silicone | Blue |

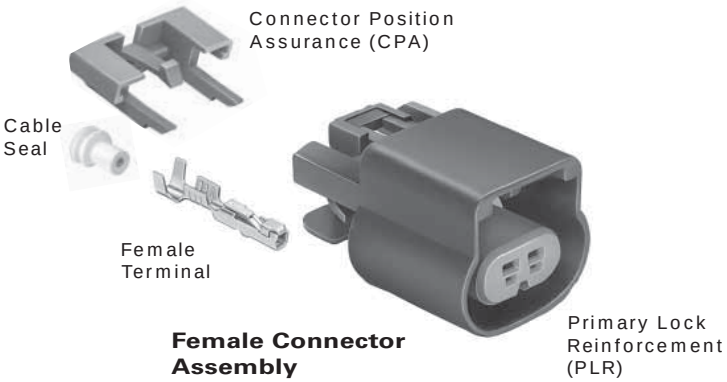


**Female Connector Assembly**

### GT 150 Female Connector Assemblies Sealed USCAR Footprint

| USCAR # * | Delphi Part # | Color | Material |
|---|---|---|---|
| 150-S-002-1-A01 | 15497399 | Black | PBT 20% GF |
| 150-S-002-1-A02 | 13542790 | Natural | PBT 20% GF |
| 150-S-002-1-A04 | 15355317 | Black | PBT 20% GF |
| 150-S-003-1-A01 | 13511131 | Black | PBT 20% GF |
| 150-S-003-1-A02 | 13511134 | Black | PBT 20% GF |
| 150-S-003-1-A04 | 15355370 | Black | PA6 10% GF & 20% GB |
| 150-S-003-2-A04 | 13512092 | Black | PBT 20% GF |
| 150-S-004-1-A01 | 15466325 | Black | PBT 20% GF |
| 150-S-004-1-A02 | 15355331 | Black | PBT 20% GF |
| 150-S-005-1-A02 | 15326389 † | Black | PA66 HS IM |
| 150-S-006-1-A02 | 15336013 | Black | PBT 20% GF |
| 150-S-006-2-A01 | 15460171 | Black | PBT 20% GF |

*Other USCAR indexes are also available.

† Applications mating to EGR valves may require gold plated female terminals.

### GT 150 Female Connector Assemblies Sealed

| # Cavities | Connector | Color | Material |
|---|---|---|---|
| 2 | 13510085 | Black | PBT 20% GF |
| 3 | 13519047 | Black | PBT 20% GF |
| 4 | 15487756 | Black | PBT 20% GF |
| 5 | 13519051 | Black | PBT 20% GF |
| 6 | 15397577 | Black | PBT 20% GF |
| 8 | 15326835 | Black | PA6 10% GF & 20% GB |
| 10 | 15326842 | Black | PA6 10% GF & 20% GB |
| 12 | 13530777 | Black | PBT 20% GF |
| 14 | 15326856 | Black | PA6 10% GF & 20% GB |
| 16 | 15326863 | Black | PA6 10% GF & 20% GB |

Primary Lock Reinforcement (PLR) and Connector Seals are included in the Connector Assemblies listed in this section.

**NOTE:** Specifications in this catalog are for general reference only and are subject to change without notice. To verify product information, please contact a Delphi representative.

# 150

## Sealed System Application Information

### GT 150 Series Terminals – Tin Plated

CABLE RANGE (mm²): ..... 0.35-1.0

CURRENT RANGE (AMPS): ..... 0-15

TEMP RANGE °C: ..... -40 to 125

RESISTANCE: ..... <10mΩ@20mV

VOLTAGE DROP: .... <10.0mV/amp

CENTERLINE SPACING (mm): ..... 4.5

BLADE WIDTH (mm): ..... 1.5

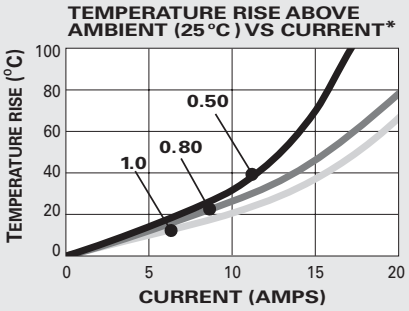


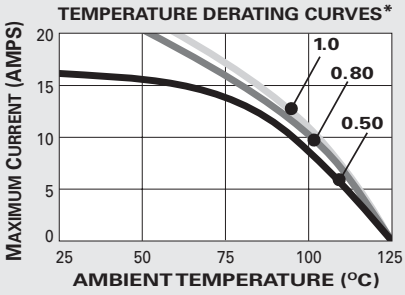


*The test data are based on single circuits in free space and were generated using a "Lumped Resistance" model. This model does not account for all of the variables that would be present in an actual application. For actual product performance, contact your regional support representative.

Cable Seal

Male Terminal

Primary Lock Reinforcement (PLR)

**Male Connector Assembly**

### GT 150 Male Connector Assemblies Sealed

| # Cavities | Connector | Color | Material |
|---|---|---|---|
| 2 | 13510099 | Black | PBT 20% GF |
| 3 | 13519049 | Black | PBT 20% GF |
| 4 | 15487755 | Black | PBT 20% GF |
| 5 | 13519053 | Black | PBT 20% GF |
| 6 | 15397579 | Black | PBT 20% GF |
| 8 | 15326840 | Black | PA6 10% GF & 20% GB |
| 10 | 15326847 | Black | PA6 10% GF & 20% GB |
| 12 | 15326854 | Black | PA6 10% GF & 20% GB |
| 14 | 15326861 | Black | PA6 10% GF & 20% GB |
| 16 | 15326868 | Black | PA6 10% GF & 20% GB |

Primary Lock Reinforcement (PLR) is included in the Connector Assemblies listed in this section.

### GT 150 Male Terminals Sealed

| Part # | Cable Range (mm²) | Material | Plating |
|---|---|---|---|
| 15326268 | 0.50-0.35 | Tin Brass | Tin |
| 15326269 | 1.00-0.75 | Tin Brass | Tin |

### GT 150 Cavity Plug*

| Part # | Cavity Diameter | Material | Color |
|---|---|---|---|
| 15305171 | 4.0mm | Silicone | Green |

* Cavity plugs seal unused female and male cavities.

**SECTION NOTES:**

- Due to rigid tolerances of connector cavities, it is critical to meet all crimp dimensions as specified.

**NOTE:** Specifications in this catalog are for general reference only and are subject to change without notice. To verify product information, please contact a Delphi representative.

# 150

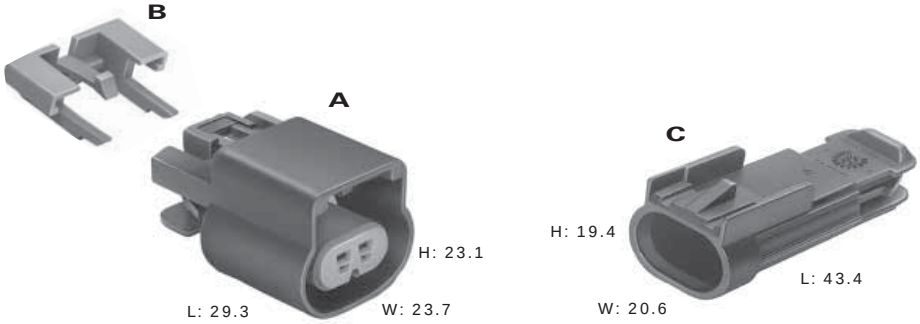


Total Mated Length: 56.7mm

## A. Part No: 13510085

| | |
|---|---|
| Description: | Connector Assembly 2F |
| Size: | 29.3L x 23.1H x 23.7W |
| Color: | Black |
| Material: | PBT 20% GF |
| Terminals: | See Page 1.6 |
| Seals/Plugs: | See Page 1.6, 1.7 |

## Part No: 13519047

| | |
|---|---|
| Description: | Connector Assembly 3F |
| Size: | 29.3L x 23.1H x 28.2W |
| Color: | Black |
| Material: | PBT 20% GF |
| Terminals: | See Page 1.6 |
| Seals/Plugs: | See Page 1.6, 1.7 |

## Part No: 15487756

| | |
|---|---|
| Description: | Connector Assembly 4F |
| Size: | 29.3L x 23.1H x 32.7W |
| Color: | Black |
| Material: | PBT 20% GF |
| Terminals: | See Page 1.6 |
| Seals/Plugs: | See Page 1.6, 1.7 |

## Part No: 13519051

| | |
|---|---|
| Description: | Connector Assembly 5F |
| Size: | 29.3L x 23.1H x 37.2W |
| Color: | Black |
| Material: | PBT 20% GF |
| Terminals: | See Page 1.6 |
| Seals/Plugs: | See Page 1.6, 1.7 |

## Part No: 15397577

| | |
|---|---|
| Description: | Connector Assembly 6F |
| Size: | 29.3L x 23.1H x 41.7W |
| Color: | Black |
| Material: | PBT 20% GF |
| Terminals: | See Page 1.6 |
| Seals/Plugs: | See Page 1.6, 1.7 |

## B. Part No: 15317832

| | |
|---|---|
| Description: | CPA |
| Color: | Gray |
| Material: | PA6 10% GF & 20% GB |

## C. Part No: 13510099

| | |
|---|---|
| Description: | Connector Assembly 2M |
| Size: | 43.4L x 19.4H x 20.6W |
| Color: | Black |
| Material: | PBT 20% GF |
| Terminals: | See Page 1.7 |
| Seals/Plugs: | See Page 1.6, 1.7 |

## Part No: 13519049

| | |
|---|---|
| Description: | Connector Assembly 3M |
| Size: | 43.4L x 19.4H x 25.1W |
| Color: | Black |
| Material: | PBT 20% GF |
| Terminals: | See Page 1.7 |
| Seals/Plugs: | See Page 1.6, 1.7 |

## Part No: 15487755

| | |
|---|---|
| Description: | Connector Assembly 4M |
| Size: | 43.4L x 19.4H x 29.6W |
| Color: | Black |
| Material: | PBT 20% GF |
| Terminals: | See Page 1.7 |
| Seals/Plugs: | See Page 1.6, 1.7 |

## Part No: 13519053

| | |
|---|---|
| Description: | Connector Assembly 5M |
| Size: | 43.4L x 19.4H x 34.1W |
| Color: | Black |
| Material: | PBT 20% GF |
| Terminals: | See Page 1.7 |
| Seals/Plugs: | See Page 1.6, 1.7 |

## Part No: 15397579

| | |
|---|---|
| Description: | Connector Assembly 6M |
| Size: | 43.4L x 19.4H x 38.6W |
| Color: | Black |
| Material: | PBT 20% GF |
| Terminals: | See Page 1.7 |
| Seals/Plugs: | See Page 1.6, 1.7 |

**NOTE:** Specifications in this catalog are for general reference only and are subject to change without notice. To verify product information, please contact a Delphi representative.

# 150

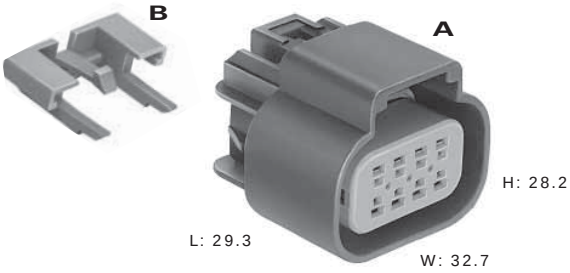


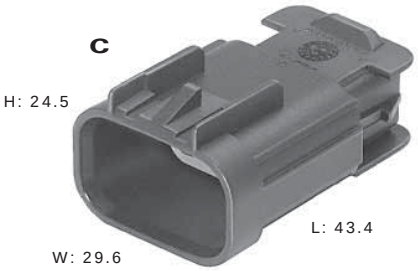


Total Mated Length: 56.7mm

### A. Part No: 15326835

| | |
|---|---|
| Description: | Connector Assembly 8F |
| Size: | 29.3L x 28.2H x 32.7W |
| Color: | Black |
| Material: | PA6 10% GF & 20% GB |
| Terminals: | See Page 1.6 |
| Seals/Plugs: | See Page 1.6, 1.7 |

### Part No: 15326842

| | |
|---|---|
| Description: | Connector Assembly 10F |
| Size: | 29.3L x 28.2H x 37.2W |
| Color: | Black |
| Material: | PA6 10% GF & 20% GB |
| Terminals: | See Page 1.6 |
| Seals/Plugs: | See Page 1.6, 1.7 |

### Part No: 13530777

| | |
|---|---|
| Description: | Connector Assembly 12F |
| Size: | 29.3L x 28.2H x 41.7W |
| Color: | Black |
| Material: | PBT 20% GF |
| Terminals: | See Page 1.6 |
| Seals/Plugs: | See Page 1.6, 1.7 |

### Part No: 15326856

| | |
|---|---|
| Description: | Connector Assembly 14F |
| Size: | 29.3L x 28.2H x 46.2W |
| Color: | Black |
| Material: | PA6 10% GF & 20% GB |
| Terminals: | See Page 1.6 |
| Seals/Plugs: | See Page 1.6, 1.7 |

### Part No: 15326863

| | |
|---|---|
| Description: | Connector Assembly 16F |
| Size: | 29.3L x 28.2H x 50.7W |
| Color: | Black |
| Material: | PA6 10% GF & 20% GB |
| Terminals: | See Page 1.6 |
| Seals/Plugs: | See Page 1.6, 1.7 |

### B. Part No: 15317832

| | |
|---|---|
| Description: | CPA |
| Color: | Gray |
| Material: | PA6 10% GF & 20% GB |

### C. Part No: 15326840

| | |
|---|---|
| Description: | Connector Assembly 8M |
| Size: | 43.4L x 24.5H x 29.6W |
| Color: | Black |
| Material: | PA6 10% GF & 20% GB |
| Terminals: | See Page 1.7 |
| Seals/Plugs: | See Page 1.6, 1.7 |

### Part No: 15326847

| | |
|---|---|
| Description: | Connector Assembly 10M |
| Size: | 43.4L x 24.5H x 34.1W |
| Color: | Black |
| Material: | PA6 10% GF & 20% GB |
| Terminals: | See Page 1.7 |
| Seals/Plugs: | See Page 1.6, 1.7 |

### Part No: 15326854

| | |
|---|---|
| Description: | Connector Assembly 12M |
| Size: | 43.4L x 24.5H x 38.6W |
| Color: | Black |
| Material: | PA6 10% GF & 20% GB |
| Terminals: | See Page 1.7 |
| Seals/Plugs: | See Page 1.6, 1.7 |

### Part No: 15326861

| | |
|---|---|
| Description: | Connector Assembly 14M |
| Size: | 43.4L x 24.5H x 43.1W |
| Color: | Black |
| Material: | PA6 10% GF & 20% GB |
| Terminals: | See Page 1.7 |
| Seals/Plugs: | See Page 1.6, 1.7 |

### Part No: 15326868

| | |
|---|---|
| Description: | Connector Assembly 16M |
| Size: | 43.4L x 24.5H x 47.6W |
| Color: | Black |
| Material: | PA6 10% GF & 20% GB |
| Terminals: | See Page 1.7 |
| Seals/Plugs: | See Page 1.6, 1.7 |

**NOTE:** Specifications in this catalog are for general reference only and are subject to change without notice. To verify product information, please contact a Delphi representative.

# 150 3.5mm Centerline Pull-to-Seat Replacement

## Sealed System Application Information

CABLE RANGE (mm²): ..... 0.35-1.0

CURRENT RANGE (AMPS): ..... 0-15

TEMP RANGE °C: ..... -40 to 125

RESISTANCE: ..... <10mΩ@20mV

VOLTAGE DROP: .... <10.0mV/amp

CENTERLINE SPACING (mm): ..... 3.5

BLADE WIDTH (mm): ..... 1.5

### GT 150 Series Terminals – Tin Plated

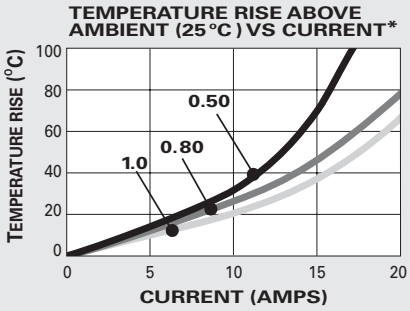


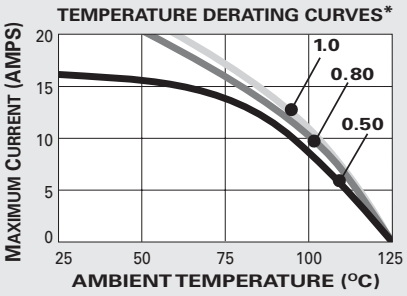


*The test data are based on single circuits in free space and were generated using a "Lumped Resistance" model. This model does not account for all of the variables that would be present in an actual application. For actual product performance, contact your regional support representative.

Cable Seal

Female Terminal

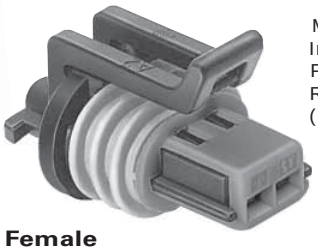

Mushroom Indexed Primary Lock Reinforcement (PLR)

**Unshrouded Female Connector Assembly**

### GT 150 Female Terminals Sealed

| Part # | Cable Range (mm²) | Material | Plating |
|---|---|---|---|
| 15326266 | 0.50-0.35 | Tin Brass | Tin |
| 15326267 | 1.00*-0.75 | Tin Brass | Tin |

* Accommodates 1.00 European Ultra Thin Wall Cable.
Accommodates 0.80 SAE Ultra Thin Wall Cable.

### GT 150 Cable Seals

| Reel Part # | Loose Part # | Cable Diameter | Material | Color |
|---|---|---|---|---|
| 12191155 | 15366022 | 1.47-1.85 | Silicone | Green |
| — | 15305351 | 1.70-2.10 | Silicone | Yellow |

### GT 150 Cavity Plug*

| Part # | Material | Color |
|---|---|---|
| 15305169 | Silicone | Orange |

* Cavity plugs seal unused female and male cavities.

### GT 150 Female Unshrouded Connector Assemblies Sealed

| # Cavities | Conn. Asm. | Indexing | Color | Material |
|---|---|---|---|---|
| 2 | 15449028 | Mushroom | Black | PBT 20% GF |
| 2 TBI | 15336027 | Mushroom | Black | PA6 10% GF & 20% GB |
| 3 | 15491547 | Mushroom | Black | PBT 20% GF |
| 4 | 15410728 | Mushroom | Black | PBT 20% GF |

**NOTE:** Specifications in this catalog are for general reference only and are subject to change without notice. To verify product information, please contact a Delphi representative.

# 150 3.5mm Centerline Pull-to-Seat Replacement

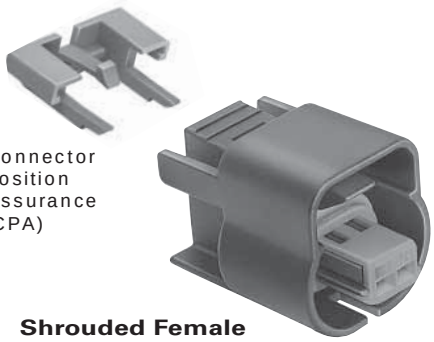


**Shrouded Female Connector Assembly**

| GT 150 Female Shrouded Connector Assemblies Sealed | | | | |
|---|---|---|---|---|
| **# Cavities** | **Conn. Asm.** | **Indexing** | **Color** | **Material** |
| 2 | 15336004 | Mushroom | Black | PA6 10% GF & 20% GB |
| 2 | 15355317 | Mushroom | Black | PBT 20% GF |
| 3 | 15336121 | Mushroom | Black | PA66 HS IM |
| 3 | 15355323 | Mushroom | Black | PBT 20% GF |
| 4 | 15326559 | Mushroom | Black | PA66 HS IM |
| 4 | 15355331 | Mushroom | Black | PBT 20% GF |
| 5 | 15326389† | Mushroom | Black | PA66 HS IM |
| 5 | 15355268 | Mushroom | Black | PBT 20% GF |
| 6 | 15336013 | Mushroom | Black | PBT 20% GF |
| 2 | 15335987 | Key | Black | PA6 10% GF & 20% GB |
| 2 | 15355319 | Key | Black | PBT 20% GF |
| 3 | 15326556 | Key | Black | PA66 HS IM |
| 3 | 15355325 | Key | Black | PBT 20% GF |
| 4 | 15336001 | Key | Black | PA66 HS IM |
| 4 | 15355329 | Key | Black | PBT 20% GF |

† Applications mating to EGR valves may require gold plated female terminals.

**A**

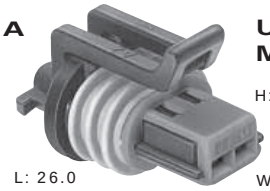


**Unshrouded Female Mushroom Indexed**

**A. Part No: 15449028**

| | |
|---|---|
| Description: | Connector Assembly 2F |
| Size: | 26.0L x 18.5H x 17.0W |
| Color: | Black |
| Material: | PBT 20% GF |
| Terminals: | See Page 1.10 |
| Seals/Plugs: | See Page 1.10 |

**Part No: 15336027**

| | |
|---|---|
| Description: | TBI Connector Assembly 2F |
| Size: | 26.0L x 11.0H x 20.5W |
| Color: | Black |
| Material: | PA6 10% GF & 20% GB |
| Terminals: | See Page 1.10 |
| Seals/Plugs: | See Page 1.10 |
| Note: | Mates to Throttle Body Injector. |

**Part No: 15491547**

| | |
|---|---|
| Description: | Connector Assembly 3F |
| Size: | 26.0L x 18.5H x 20.5W |
| Color: | Black |
| Material: | PBT 20% GF |
| Terminals: | See Page 1.10 |
| Seals/Plugs: | See Page 1.10 |

**Part No: 15410728**

| | |
|---|---|
| Description: | Connector Assembly 4F |
| Size: | 26.0L x 18.5H x 24.0W |
| Color: | Black |
| Material: | PBT 20% GF |
| Terminals: | See Page 1.10 |
| Seals/Plugs: | See Page 1.10 |

| GT Connector Assembly/Metri-Pack Pull-to-Seat Replacement Cross Reference | | |
|---|---|---|
| **GT Conn. Assembly** | **Description** | **Metri-Pack Pull-To-Seat** |
| 15449028 | Connector Assembly 2F | 12162193, 12162194, 12162195 |
| 15336027 TBI | Connector Assembly 2F | 12162204, 12162206, 12162208, 12162215, 12162216, 12162217, 12162218 |
| 15491547 | Connector Assembly 3F | 12162182, 12162183, 12162184, 12162185, 12162186, 12162279 |
| 15410728 | Connector Assembly 4F | 12124846, 12129192, 12162188, 12162189, 12162190, 12162191 |

**NOTE:** Specifications in this catalog are for general reference only and are subject to change without notice. To verify product information, please contact a Delphi representative.

# 150 3.5mm Centerline Pull-to-Seat Replacement

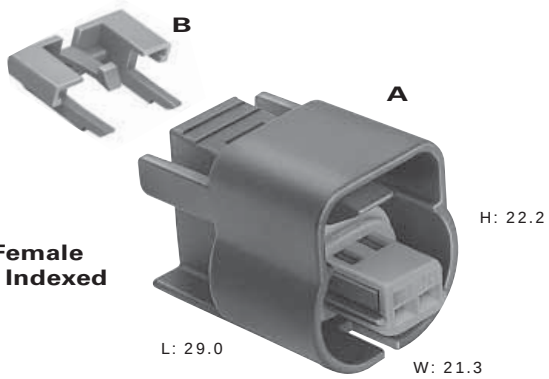


**Shrouded Female Mushroom Indexed**

### A. Part No: 15336004*

| | |
|---|---|
| Description: | Connector Assembly 2F |
| Size: | 29.0L x 22.2H x 21.3W |
| Color: | Black |
| Material: | PA6 10% GF & 20% GB |
| Terminals: | See Page 1.10 |
| Seals/Plugs: | See Page 1.10 |

### Part No: 15336121*

| | |
|---|---|
| Description: | Connector Assembly 3F |
| Size: | 29.0L x 22.2H x 24.8W |
| Color: | Black |
| Material: | PA66 HS IM |
| Terminals: | See Page 1.10 |
| Seals/plugs: | See Page 1.10 |

### Part No: 15326559*

| | |
|---|---|
| Description: | Connector Assembly 4F |
| Size: | 29.0L x 22.2H x 28.3W |
| Color: | Black |
| Material: | PA66 HS IM |
| Terminals: | See Page 1.10 |
| Seals/Plugs: | See Page 1.10 |

### Part No: 15326389*†

| | |
|---|---|
| Description: | Connector Assembly 5F |
| Size: | 29.0L x 22.2H x 31.8W |
| Color: | Black |
| Material: | PA66 HS IM |
| Terminals: | See Page 1.10 |
| Seals/Plugs: | See Page 1.10 |

### Part No: 15336013*

| | |
|---|---|
| Description: | Connector Assembly 6F |
| Size: | 29.0L x 22.2H x 35.3W |
| Color: | Black |
| Material: | PBT 20% GF |
| Terminals: | See Page 1.10 |
| Seals/Plugs: | See Page 1.10 |

### B. Part No: 15317832

| | |
|---|---|
| Description: | CPA |
| Color: | Gray |
| Material: | PA6 10% GF & 20% GB |

*See Page 1.11 for alternative material

† Applications mating to EGR valves may require gold plated female terminals.

## GT Connector Assembly/Metri-Pack Pull-to-Seat Replacement Cross Reference

| GT Connector Assembly | Description | Metri-Pack Pull-To-Seat |
|---|---|---|
| 15336004, 15355317 | Connector Assembly 2F | 12162193, 12162194, 12162195 |
| 15336121, 15355323 | Connector Assembly 3F | 12162182, 12162183, 12162184, 12162185, 12162186 |
| 15326559, 15355331 | Connector Assembly 4F | 12124846, 12129192, 12162188, 12162189, 12162190, 12162191 |
| 15326389†, 15355268 | Connector Assembly 5F | 12162825, 12162826, 12162827 |
| 15336013, 15397577 | Connector Assembly 6F | 12066317, 12162210, 12162260, 12162261, 12162262 |

**NOTE:** Specifications in this catalog are for general reference only and are subject to change without notice. To verify product information, please contact a Delphi representative.

# 150 3.5mm Centerline Pull-to-Seat Replacement

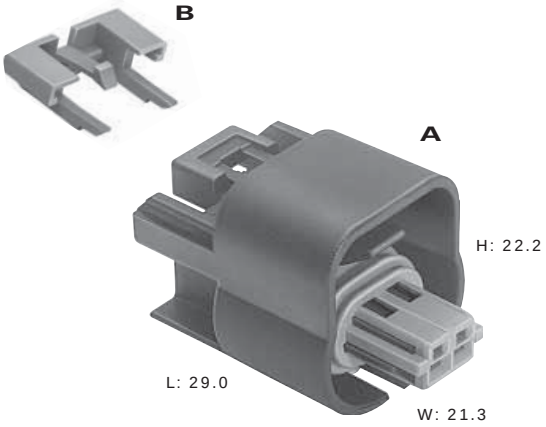


**Shrouded Female Key Indexed**

### A. Part No: 15335987*

| | |
|---|---|
| Description: | Connector Assembly 2F |
| Size: | 29.0L x 22.2H x 21.3W |
| Color: | Black |
| Material: | PA6 10% GF & 20% GB |
| Terminals: | See Page 1.10 |
| Seals/Plugs: | See Page 1.10 |

### Part No: 15326556*

| | |
|---|---|
| Description: | Connector Assembly 3F |
| Size: | 29.0L x 22.2H x 24.8W |
| Color: | Black |
| Material: | PA66 HS IM |
| Terminals: | See Page 1.10 |
| Seals/Plugs: | See Page 1.10 |

### Part No: 15336001*

| | |
|---|---|
| Description: | Connector Assembly 4F |
| Size: | 29.0L x 22.2H x 28.3W |
| Color: | Black |
| Material: | PA66 HS IM |
| Terminals: | See Page 1.10 |
| Seals/Plugs: | See Page 1.10 |

### B. Part No: 15317832

| | |
|---|---|
| Description: | CPA |
| Color: | Gray |
| Material: | PA6 10% GF & 20% GB |

*See Page 1.11 for alternative material

## GT Connector Assembly/Metri-Pack Pull-to-Seat Replacement Cross Reference

| GT Connector Assembly | Description | Metri-Pack Pull-To-Seat |
|---|---|---|
| 15335987, 15355319 | Connector Assembly 2F | 12162197, 12162198, 12162199 |
| 15326556, 15355325 | Connector Assembly 3F | 12162278, 12162279, 12162280 |
| 15336001, 15355329 | Connector Assembly 4F | 12162833, 12162834 |

**NOTE:** Specifications in this catalog are for general reference only and are subject to change without notice. To verify product information, please contact a Delphi representative.

# 280

## Cross Sectional View

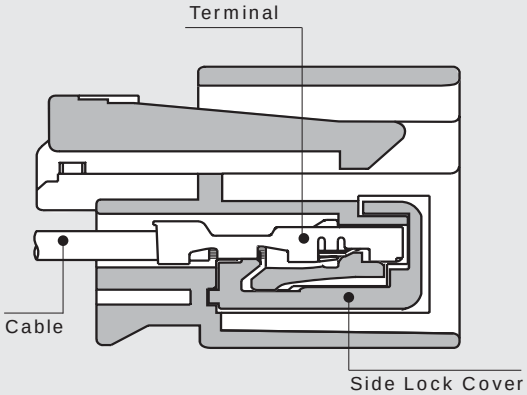


**Female Connector Assembly**

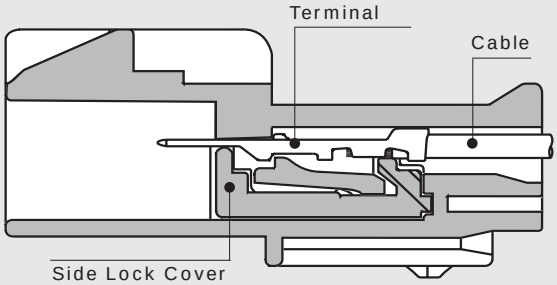


**Male Connector Assembly**

### GT 280 Female Terminals Unsealed

| Part # | Cable Range (mm²) | Material | Plating |
|---|---|---|---|
| 15304710 | 0.50-0.35 | Tin Brass | Tin |
| 15304711 | 1.00-0.75 | Tin Brass | Tin |
| 15304712 | 3.00-1.50 | Tin Brass | Tin |
| 15304713 | 5.00-4.00 | Tin Brass | Tin |

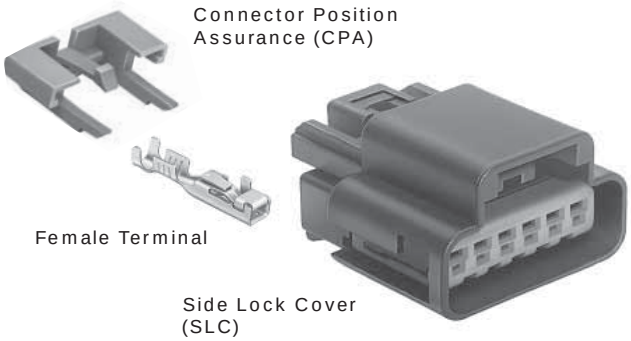


**Female Connector Assembly**

### GT 280 Female Connector Assemblies Unsealed USCAR Footprint

| USCAR # | Delphi Part # | Color | Material |
|---|---|---|---|
| 280-U-003-2-A01 | 12176445 | Natural | PA6 10% GF & 20% GB |
| 280-U-003-2-B01 | 12176446 | Black | PA6 10% GF & 20% GB |
| 280-U-003-2-C01 | 12176836 | Grey | PA6 10% GF & 20% GB |
| 280-U-004-1-A01 | 15466671 | Grey | PBT 20% GF |
| 280-U-004-1-B01 | 15489152 | Grey | PBT 20% GF |
| 280-U-004-1-C01 | 15489154 | Grey | PBT 20% GF |
| 280-U-004-1-D01 | 15489156 | Grey | PBT 20% GF |

### GT 280 Female Connector Assemblies Unsealed

| # Cavities | Conn. Asm. | Color | Material |
|---|---|---|---|
| 2 | 15326870 | Black | PA6 10% GF & 20% GB |
| 3 | 15326877 | Black | PA6 10% GF & 20% GB |
| 4 | 15326886 | Black | PA6 10% GF & 20% GB |
| 5 | 15326893 | Black | PA6 10% GF & 20% GB |
| 6 | 15326900 | Black | PA6 10% GF & 20% GB |
| 8 | 15459914 | Black | PBT 20% GF |
| 10 | 15326931 | Black | PA6 10% GF & 20% GB |
| 12 | 13523064 | Black | PBT 20% GF |
| 14 | 15326945 | Black | PA6 10% GF & 20% GB |
| 16 | 15326952 | Black | PA6 10% GF & 20% GB |

Side Lock Covers (SLC) are included in the Connector Assemblies listed in this section.

**NOTE:** Specifications in this catalog are for general reference only and are subject to change without notice. To verify product information, please contact a Delphi representative.

# 280

## Unsealed System Application Information

### 280 Series Terminals – Tin Plated

CABLE RANGE (mm²): ..... 0.35-5.0

CURRENT RANGE (AMPS): ..... 0-25

TEMP RANGE °C: ..... -40 to 125

RESISTANCE: ..... <10mΩ@20mV

VOLTAGE DROP: ..... <4.0mV/amp

CENTERLINE SPACING (mm): ..... 5.5

BLADE WIDTH (mm): ..... 2.8

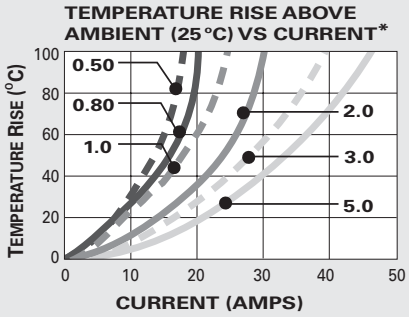


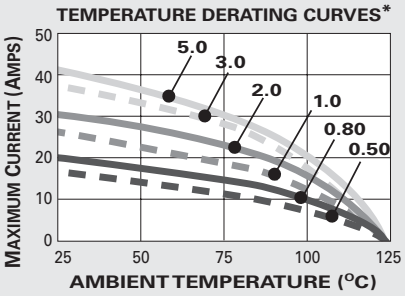


*The test data are based on single circuits in free space and were generated using a "Lumped Resistance" model. This model does not account for all of the variables that would be present in an actual application. For actual product performance, contact your regional support representative.

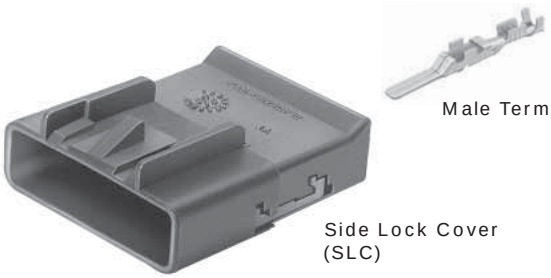


**Male Connector Assembly**

| GT 280 Male Connector Assemblies Unsealed | | | |
|---|---|---|---|
| **# Cavities** | **Connector** | **Color** | **Material** |
| 2 | 15326874 | Black | PA6 10% GF & 20% GB |
| 3 | 15326881 | Black | PA6 10% GF & 20% GB |
| 4 | 15326890 | Black | PA6 10% GF & 20% GB |
| 5 | 15326897 | Black | PA6 10% GF & 20% GB |
| 6 | 15326904 | Black | PA6 10% GF & 20% GB |
| 8 | 15459916 | Black | PBT 20% GF |
| 10 | 15326935 | Black | PA6 10% GF & 20% GB |
| 12 | 15326942 | Black | PA6 10% GF & 20% GB |
| 14 | 15326949 | Black | PA6 10% GF & 20% GB |
| 16 | 15326956 | Black | PA6 10% GF & 20% GB |

Side Lock Covers (SLC) are included in the Connector Assemblies listed in this section.

| GT 280 Male Terminals Unsealed | | | |
|---|---|---|---|
| **Part #** | **Cable Range (mm²)** | **Material** | **Plating** |
| 15304722 | 0.50-0.35 | Tin Brass | Tin |
| 15304723 | 1.00-0.75 | Tin Brass | Tin |
| 15304724 | 3.00-1.50 | Tin Brass | Tin |
| 15304725 | 5.00-4.00 | Tin Brass | Tin |

**SECTION NOTES:**

- Due to rigid tolerances of connector cavities, it is critical to meet all crimp dimensions as specified.
- Special consideration must be used when applying terminals 15304713 and 15304725 due to cavity space limitations.

**NOTE:** Specifications in this catalog are for general reference only and are subject to change without notice. To verify product information, please contact a Delphi representative.

# 280

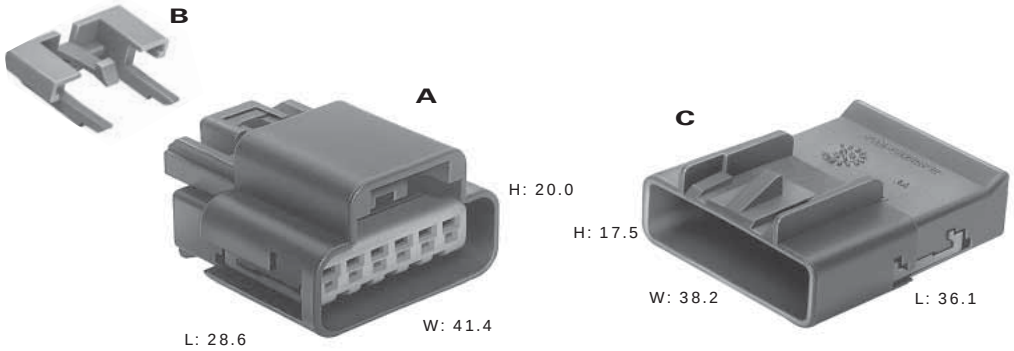


Total Mated Length: 48.7mm

## A. Part No: 15326870

| | |
|---|---|
| Description: | Connector Assembly 2F |
| Size: | 28.6L x 20.0H x 19.4W |
| Color: | Black |
| Material: | PA6 10% GF & 20% GB |
| Terminals: | See Page 1.14 |

## Part No: 15326877

| | |
|---|---|
| Description: | Connector Assembly 3F |
| Size: | 28.6L x 20.0H x 24.9W |
| Color: | Black |
| Material: | PA6 10% GF & 20% GB |
| Terminals: | See Page 1.14 |

## Part No: 15326886

| | |
|---|---|
| Description: | Connector Assembly 4F |
| Size: | 28.6L x 20.0H x 30.4W |
| Color: | Black |
| Material: | PA6 10% GF & 20% GB |
| Terminals: | See Page 1.14 |

## Part No: 15326893

| | |
|---|---|
| Description: | Connector Assembly 5F |
| Size: | 28.6L x 20.0H x 35.9W |
| Color: | Black |
| Material: | PA6 10% GF & 20% GB |
| Terminals: | See Page 1.14 |

## Part No: 15326900

| | |
|---|---|
| Description: | Connector Assembly 6F |
| Size: | 28.6L x 20.0H x 41.4W |
| Color: | Black |
| Material: | PA6 10% GF & 20% GB |
| Terminals: | See Page 1.14 |

## B. Part No: 15317832

| | |
|---|---|
| Description: | CPA |
| Color: | Gray |
| Material: | PA6 10% GF & 20% GB |

## C. Part No: 15326874

| | |
|---|---|
| Description: | Connector Assembly 2M |
| Size: | 36.1L x 17.5H x 16.2W |
| Color: | Black |
| Material: | PA6 10% GF & 20% GB |
| Terminals: | See Page 1.15 |

## Part No: 15326881

| | |
|---|---|
| Description: | Connector Assembly 3M |
| Size: | 36.1L x 17.5H x 21.7W |
| Color: | Black |
| Material: | PA6 10% GF & 20% GB |
| Terminals: | See Page 1.15 |

## Part No: 15326890

| | |
|---|---|
| Description: | Connector Assembly 4M |
| Size: | 36.1L x 17.5H x 27.2W |
| Color: | Black |
| Material: | PA6 10% GF & 20% GB |
| Terminals: | See Page 1.15 |

## Part No: 15326897

| | |
|---|---|
| Description: | Connector Assembly 5M |
| Size: | 36.1L x 17.5H x 32.7W |
| Color: | Black |
| Material: | PA6 10% GF & 20% GB |
| Terminals: | See Page 1.15 |

## Part No: 15326904

| | |
|---|---|
| Description: | Connector Assembly 6M |
| Size: | 36.1L x 17.5H x 38.2W |
| Color: | Black |
| Material: | PA6 10% GF & 20% GB |
| Terminals: | See Page 1.15 |

**NOTE:** Specifications in this catalog are for general reference only and are subject to change without notice. To verify product information, please contact a Delphi representative.

# 280

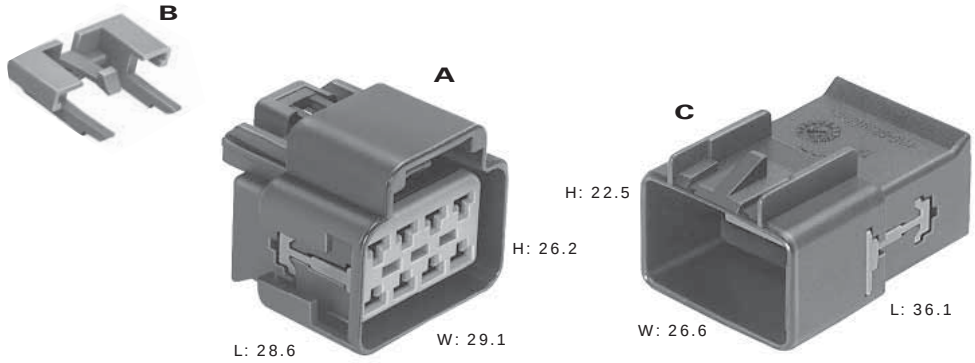


Total Mated Length: 48.7mm

## A. Part No: 15459914

| | |
|---|---|
| Description: | Connector Assembly 8F |
| Size: | 28.6L x 26.2H x 29.1W |
| Color: | Black |
| Material: | PBT 20% GF |
| Terminals: | See Page 1.14 |

## Part No: 15326931

| | |
|---|---|
| Description: | Connector Assembly 10F |
| Size: | 28.6L x 26.2H x 34.6W |
| Color: | Black |
| Material: | PA6 10% GF & 20% GB |
| Terminals: | See Page 1.14 |

## Part No: 13523064

| | |
|---|---|
| Description: | Connector Assembly 12F |
| Size: | 28.6L x 26.2H x 40.1W |
| Color: | Black |
| Material: | PBT 20% GF |
| Terminals: | See Page 1.14 |

## Part No: 15326945

| | |
|---|---|
| Description: | Connector Assembly 14F |
| Size: | 28.6L x 26.2H x 45.6W |
| Color: | Black |
| Material: | PA6 10% GF & 20% GB |
| Terminals: | See Page 1.14 |

## Part No: 15326952

| | |
|---|---|
| Description: | Connector Assembly 16F |
| Size: | 28.6L x 26.2H x 51.1W |
| Color: | Black |
| Material: | PA6 10% GF & 20% GB |
| Terminals: | See Page 1.14 |

## B. Part No: 15317832

| | |
|---|---|
| Description: | CPA |
| Color: | Gray |
| Material: | PA6 10% GF & 20% GB |

## C. Part No: 15459916

| | |
|---|---|
| Description: | Connector Assembly 8M |
| Size: | 36.1L x 22.5H x 26.6W |
| Color: | Black |
| Material: | PBT 20% GF |
| Terminals: | See Page 1.15 |

## Part No: 15326935

| | |
|---|---|
| Description: | Connector Assembly 10M |
| Size: | 36.1L x 22.5H x 32.1W |
| Color: | Black |
| Material: | PA6 10% GF & 20% GB |
| Terminals: | See Page 1.15 |

## Part No: 15326942

| | |
|---|---|
| Description: | Connector Assembly 12M |
| Size: | 36.1L x 22.5H x 37.6W |
| Color: | Black |
| Material: | PA6 10% GF & 20% GB |
| Terminals: | See Page 1.15 |

## Part No: 15326949

| | |
|---|---|
| Description: | Connector Assembly 14M |
| Size: | 36.1L x 22.5H x 43.1W |
| Color: | Black |
| Material: | PA6 10% GF & 20% GB |
| Terminals: | See Page 1.15 |

## Part No: 15326956

| | |
|---|---|
| Description: | Connector Assembly 16M |
| Size: | 36.1L x 22.5H x 48.6W |
| Color: | Black |
| Material: | PA6 10% GF & 20% GB |
| Terminals: | See Page 1.15 |

**NOTE:** Specifications in this catalog are for general reference only and are subject to change without notice. To verify product information, please contact a Delphi representative.

# 280

## Cross Sectional View

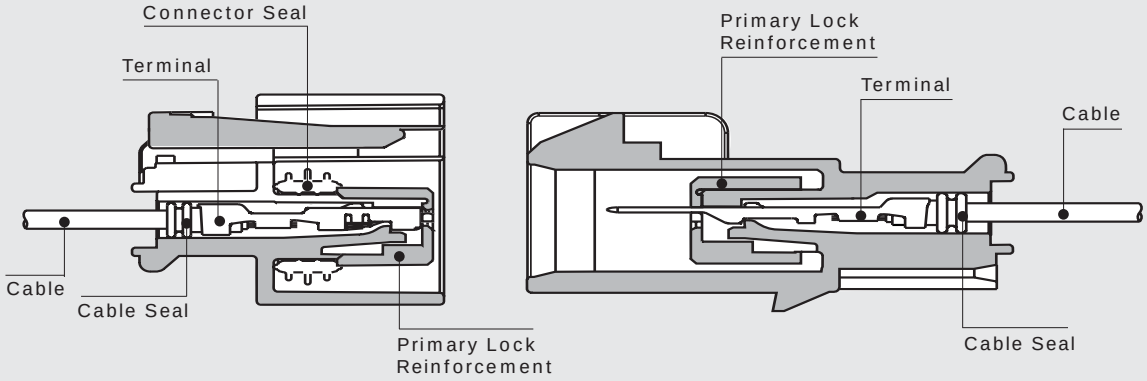


**Female Connector Assembly** **Male Connector Assembly**

### GT 280 Female Terminals Sealed

| Part # | Cable Range (mm²) | Material | Plating |
|---|---|---|---|
| 15304718 | 0.50-0.35 | Tin Brass | Tin |
| 15304719 | 1.00-0.75 | Tin Brass | Tin |
| 15304720† | 3.00-1.50 | Tin Brass | Tin |
| 15326004 | 5.00-4.00 | Beryllium Copper | Tin |

### GT 280 Cable Seals

| Reel Part # | Loose Part # | Cable Diameter | Material | Color |
|---|---|---|---|---|
| 12191221 | 15366065 | 1.20-1.85 | Silicone | Orange |
| 12191222 | 15366066 | 1.86-2.25 | Silicone | Yellow |
| 12191223 | 15366067 | 2.50-3.20 | Silicone | Tan |
| – | 15336674† | 2.70-3.20 | Silicone | Blue |
| – | 12191235 | 3.40-3.90 | Silicone | Purple |

### GT 280 Female Connector Assemblies Sealed USCAR Footprint

| USCAR # | Delphi Part # | Color | Material |
|---|---|---|---|
| 280-S-002-1-A01 | 13517352 | Black | PBT 20% GF |
| 280-S-006-2-A01 | 15476196 | Black | PBT 20% GF |
| 280-S-006-2-B01 | 15476197 | Grey | PBT 20% GF |
| 280-S-006-2-C01 | 15476198 | Brown | PBT 20% GF |
| 280-S-006-2-D01 | 15476199 | Green | PBT 20% GF |

† Note: If cable seal 15336674 is used with terminal 15304720, connector cavity needs to be designed with 5.2mm diameter sealing surface.

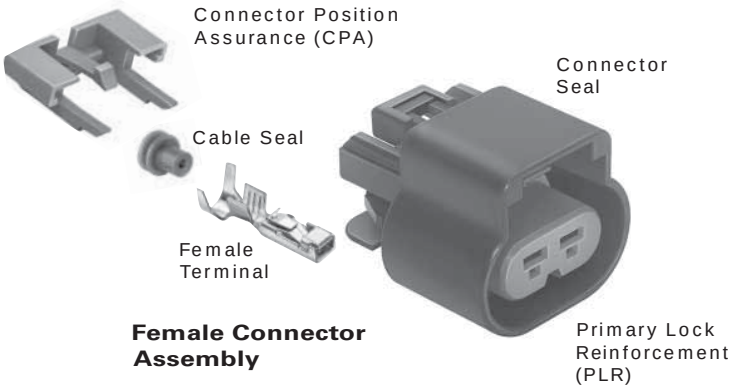


**Female Connector Assembly**

### GT 280 Female Connector Assemblies Sealed

| # Cavities | Conn. Asm. | Color | Material |
|---|---|---|---|
| 2 | 13518845 | Black | PBT 20% GF |
| 3 | 13521455 | Black | PBT 20% GF |
| 4 | 13521459 | Black | PBT 20% GF |
| 5 | 13521463 | Black | PBT 20% GF |
| 6 | 13521467 | Black | PBT 20% GF |
| 8 | 15326654 | Black | PA6 10% GF & 20% GB |
| 10 | 15326660 | Black | PA6 10% GF & 20% GB |
| 12 | 15326910 | Black | PA6 10% GF & 20% GB |
| 14 | 15326917 | Black | PA6 10% GF & 20% GB |
| 16 | 15326666 | Black | PA6 10% GF & 20% GB |

Primary Lock Reinforcement (PLR) and Connector Seals are included in the Connector Assemblies listed in this section.

**NOTE:** Specifications in this catalog are for general reference only and are subject to change without notice. To verify product information, please contact a Delphi representative.

# 280

## Sealed System Application Information

### 280 Series Terminals – Tin Plated

CABLE RANGE (mm²): ..... 0.35-5.0

CURRENT RANGE (AMPS): ..... 0-25

TEMP RANGE °C: ..... -40 to 125

RESISTANCE: ..... <10mΩ@20mV

VOLTAGE DROP: ..... <4.0mV/amp

CENTERLINE SPACING (mm): ..... 6.5

BLADE WIDTH (mm): ..... 2.8

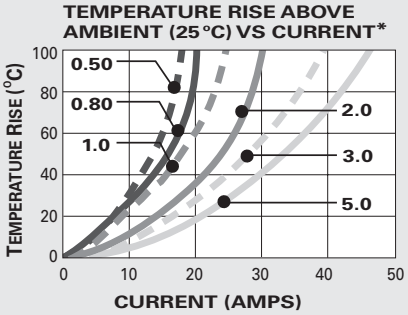


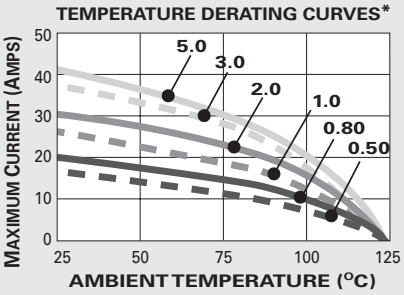


*The test data are based on single circuits in free space and were generated using a "Lumped Resistance" model. This model does not account for all of the variables that would be present in an actual application. For actual product performance, contact your regional support representative.

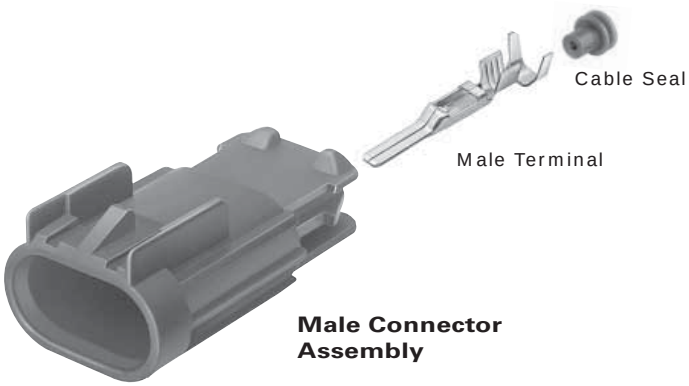

### GT 280 Male Connector Assemblies Sealed

| # Cavities | Connector | Color | Material |
|---|---|---|---|
| 2 | 13518847 | Black | PBT 20% GF |
| 3 | 13521457 | Black | PBT 20% GF |
| 4 | 13521461 | Black | PBT 20% GF |
| 5 | 13521465 | Black | PBT 20% GF |
| 6 | 13521469 | Black | PBT 20% GF |
| 8 | 15326655 | Black | PA6 10% GF & 20% GB |
| 10 | 15326661 | Black | PA6 10% GF & 20% GB |
| 12 | 15326915 | Black | PA6 10% GF & 20% GB |
| 14 | 15326922 | Black | PA6 10% GF & 20% GB |
| 16 | 15326667 | Black | PA6 10% GF & 20% GB |

Primary Lock Reinforcement is included in the Connector Assemblies listed in this section.

### GT 280 Male Terminals Sealed

| Part # | Cable Range (mm²) | Material | Plating |
|---|---|---|---|
| 15304730 | 0.50-0.35 | Tin Brass | Tin |
| 15304731 | 1.00-0.75 | Tin Brass | Tin |
| 15304732 | 3.00-1.50 | Tin Brass | Tin |

### GT 280 Cavity Plug*

| Part # | Cavity Diameter | Material | Color |
|---|---|---|---|
| 15305170 | 5.8mm | Silicone | White |

* Cavity plugs seal unused female and male cavities.

**SECTION NOTES:**

- Due to rigid tolerances of connector cavities, it is critical to meet all crimp dimensions as specified.

**NOTE:** Specifications in this catalog are for general reference only and are subject to change without notice. To verify product information, please contact a Delphi representative.

# 280

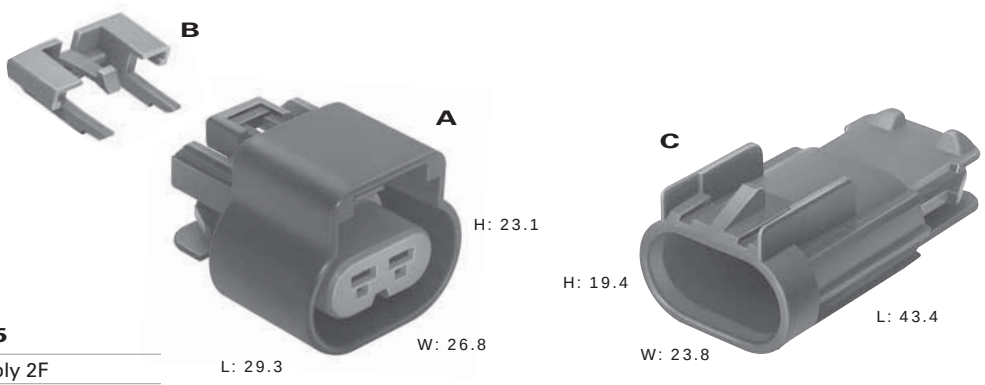


Total Mated Length: 56.7mm

## A. Part No: 13518845

| | |
|---|---|
| Description: | Connector Assembly 2F |
| Size: | 29.3L x 23.1H x 26.8W |
| Color: | Black |
| Material: | PBT 20% GF |
| Terminals: | See Page 1.18 |
| Seals/Plugs: | See Page 1.18, 1.19 |

## Part No: 13521455

| | |
|---|---|
| Description: | Connector Assembly 3F |
| Size: | 29.3L x 23.1H x 33.3W |
| Color: | Black |
| Material: | PBT 20% GF |
| Terminals: | See Page 1.18 |
| Seals/Plugs: | See Page 1.18, 1.19 |

## Part No: 13521459

| | |
|---|---|
| Description: | Connector Assembly 4F |
| Size: | 29.3L x 23.1H x 39.8W |
| Color: | Black |
| Material: | PBT 20% GF |
| Terminals: | See Page 1.18 |
| Seals/Plugs: | See Page 1.18, 1.19 |

## Part No: 13521463

| | |
|---|---|
| Description: | Connector Assembly 5F |
| Size: | 29.3L x 23.1H x 46.3W |
| Color: | Black |
| Material: | PBT 20% GF |
| Terminals: | See Page 1.18 |
| Seals/Plugs: | See Page 1.18, 1.19 |

## Part No: 13521467

| | |
|---|---|
| Description: | Connector Assembly 6F |
| Size: | 29.3L x 23.1H x 52.8W |
| Color: | Black |
| Material: | PBT 20% GF |
| Terminals: | See Page 1.18 |
| Seals/Plugs: | See Page 1.18, 1.19 |

## B. Part No: 15317832

| | |
|---|---|
| Description: | CPA |
| Color: | Gray |
| Material: | PA6 10% GF & 20% GB |

## C. Part No: 13518847

| | |
|---|---|
| Description: | Connector Assembly 2M |
| Size: | 43.4L x 19.4H x 23.8W |
| Color: | Black |
| Material: | PBT 20% GF |
| Terminals: | See Page 1.19 |
| Seals/Plugs: | See Page 1.18, 1.19 |

## Part No: 13521457

| | |
|---|---|
| Description: | Connector Assembly 3M |
| Size: | 43.4L x 19.4H x 30.3W |
| Color: | Black |
| Material: | PBT 20% GF |
| Terminals: | See Page 1.19 |
| Seals/Plugs: | See Page 1.18, 1.19 |

## Part No: 13521461

| | |
|---|---|
| Description: | Connector Assembly 4M |
| Size: | 43.4L x 19.4H x 36.8W |
| Color: | Black |
| Material: | PBT 20% GF |
| Terminals: | See Page 1.19 |
| Seals/Plugs: | See Page 1.18, 1.19 |

## Part No: 13521465

| | |
|---|---|
| Description: | Connector Assembly 5M |
| Size: | 43.4L x 19.4H x 43.3W |
| Color: | Black |
| Material: | PBT 20% GF |
| Terminals: | See Page 1.19 |
| Seals/Plugs: | See Page 1.18, 1.19 |

## Part No: 13521469

| | |
|---|---|
| Description: | Connector Assembly 6M |
| Size: | 43.4L x 19.4H x 49.8W |
| Color: | Black |
| Material: | PBT 20% GF |
| Terminals: | See Page 1.19 |
| Seals/Plugs: | See Page 1.18, 1.19 |

**NOTE:** Specifications in this catalog are for general reference only and are subject to change without notice. To verify product information, please contact a Delphi representative.

# 280

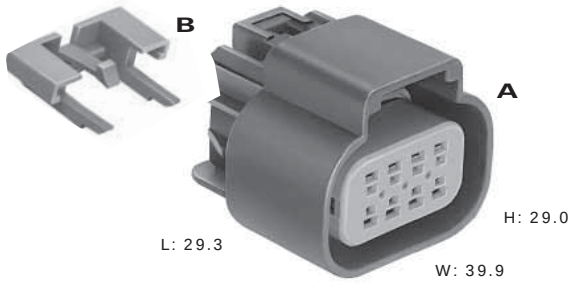

Total Mated Length: 56.7mm

## A. Part No: 15326654

| | |
|---|---|
| Description: | Connector Assembly 8F |
| Size: | 29.3L x 29.0H x 39.9W |
| Color: | Black |
| Material: | PA6 10% GF & 20% GB |
| Terminals: | See Page 1.18 |
| Seals/Plugs: | See Page 1.18, 1.19 |

## Part No: 15326660

| | |
|---|---|
| Description: | Connector Assembly 10F |
| Size: | 29.3L x 29.0H x 46.4W |
| Color: | Black |
| Material: | PA6 10% GF & 20% GB |
| Terminals: | See Page 1.18 |
| Seals/Plugs: | See Page 1.18, 1.19 |

## Part No: 15326910

| | |
|---|---|
| Description: | Connector Assembly 12F |
| Size: | 29.3L x 29.0H x 52.9W |
| Color: | Black |
| Material: | PA6 10% GF & 20% GB |
| Terminals: | See Page 1.18 |
| Seals/Plugs: | See Page 1.18, 1.19 |

## Part No: 15326917

| | |
|---|---|
| Description: | Connector Assembly 14F |
| Size: | 29.3L x 29.0H x 59.4W |
| Color: | Black |
| Material: | PA6 10% GF & 20% GB |
| Terminals: | See Page 1.18 |
| Seals/Plugs: | See Page 1.18, 1.19 |

## Part No: 15326666

| | |
|---|---|
| Description: | Connector Assembly 16F |
| Size: | 29.3L x 29.0H x 65.9W |
| Color: | Black |
| Material: | PA6 10% GF & 20% GB |
| Terminals: | See Page 1.18 |
| Seals/Plugs: | See Page 1.18, 1.19 |

## B. Part No: 15317832

| | |
|---|---|
| Description: | CPA |
| Color: | Gray |
| Material: | PA6 10% GF & 20% GB |

## C. Part No: 15326655

| | |
|---|---|
| Description: | Connector Assembly 8M |
| Size: | 43.4L x 25.5H x 36.8W |
| Color: | Black |
| Material: | PA6 10% GF & 20% GB |
| Terminals: | See Page 1.19 |
| Seals/plugs: | See Page 1.18, 1.19 |

## Part No: 15326661

| | |
|---|---|
| Description: | Connector Assembly 10M |
| Size: | 43.4L x 25.5H x 43.3W |
| Color: | Black |
| Material: | PA6 10% GF & 20% GB |
| Terminals: | See Page 1.19 |
| Seals/Plugs: | See Page 1.18, 1.19 |

## Part No: 15326915

| | |
|---|---|
| Description: | Connector Assembly 12M |
| Size: | 43.4L x 25.5H x 49.8W |
| Color: | Black |
| Material: | PA6 10% GF & 20% GB |
| Terminals: | See Page 1.19 |
| Seals/Plugs: | See Page 1.18, 1.19 |

## Part No: 15326922

| | |
|---|---|
| Description: | Connector Assembly 14M |
| Size: | 43.4L x 25.5H x 56.3W |
| Color: | Black |
| Material: | PA6 10% GF & 20% GB |
| Terminals: | See Page 1.19 |
| Seals/Plugs: | See Page 1.18, 1.19 |

## Part No: 15326667

| | |
|---|---|
| Description: | Connector Assembly 16M |
| Size: | 43.4L x 25.5H x 62.8W |
| Color: | Black |
| Material: | PA6 10% GF & 20% GB |
| Terminals: | See Page 1.19 |
| Seals/Plugs: | See Page 1.18, 1.19 |

**NOTE:** Specifications in this catalog are for general reference only and are subject to change without notice. To verify product information, please contact a Delphi representative.

# 280 Device Connections

GT 280 Connection Systems are designed to mate to most headlamps, including a variety of daytime running lamps, high beam, and dual filament BULBS.

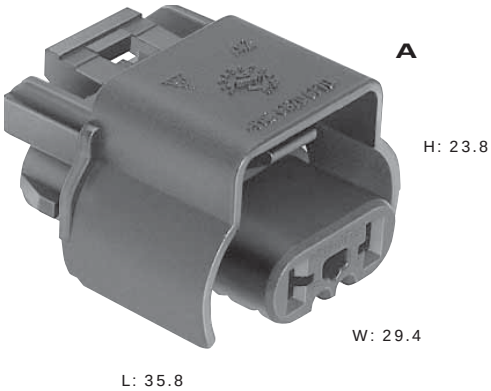


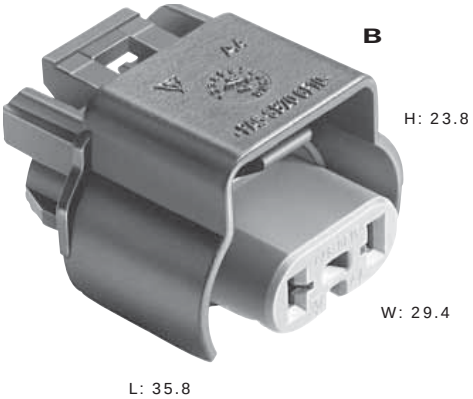


**A. Part No: 15336116**

| | |
|---|---|
| Description: | Connector Assembly 2F |
| Size: | 35.8L x 23.8H x 29.4W |
| Color: | Black |
| Material: | PA6 20% GF & 10% GB |
| Terminals: | See Page 1.18 |
| Seals/Plugs: | See Page 2.30, 2.31 |

**B. Part No: 15336117**

| | |
|---|---|
| Description: | Connector Assembly 2F |
| Size: | 35.8L x 23.8H x 29.4W |
| Color: | Brown |
| Material: | PA6 20% GF & 10% GB |
| Terminals: | See Page 1.18 |
| Seals/Plugs: | See Page 2.30, 2.31 |

**NOTE:** Specifications in this catalog are for general reference only and are subject to change without notice. To verify product information, please contact a Delphi representative.

# 150/280 Mixed

## Cross Sectional View

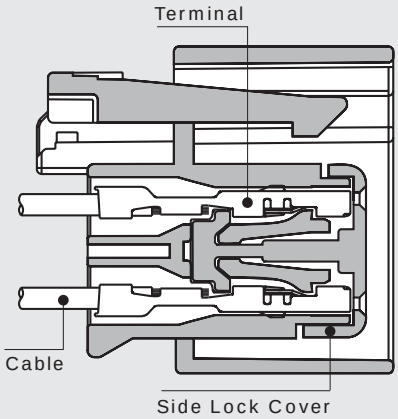


**Female Connector Assembly**

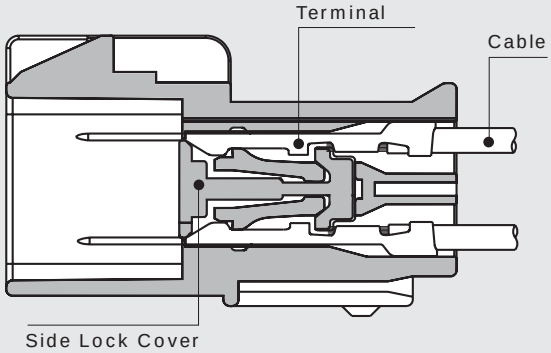


**Male Connector Assembly**

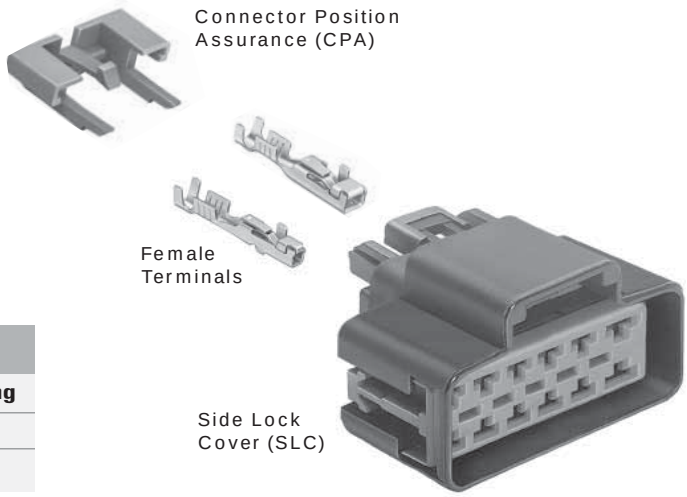


**Female Connector Assembly**

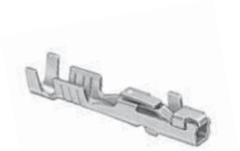

| GT 150 Female Terminals Unsealed | | | |
|---|---|---|---|
| **Part #** | **Cable Range (mm²)** | **Material** | **Plating** |
| 12191811 | 0.50-0.35 | Tin Brass | Tin |
| 12191812 | 1.00-0.75 | Tin Brass | Tin |

| GT 280 Female Terminals Unsealed | | | |
|---|---|---|---|
| **Part #** | **Cable Range (mm²)** | **Material** | **Plating** |
| 15304710 | 0.50-0.35 | Tin Brass | Tin |
| 15304711 | 1.00-0.75 | Tin Brass | Tin |
| 15304712 | 3.00-1.50 | Tin Brass | Tin |
| 15304713 | 5.00-4.00 | Tin Brass | Tin |

| GT Mixed Female Connector Assemblies Unsealed | | | |
|---|---|---|---|
| **# Cavities** | **Connector** | **Color** | **Material** |
| 12 | 15336205 | Black | PA6 10% GF & 20% GB |
| 16 | 15336219 | Black | PA6 10% GF & 20% GB |
| 18 | 15326082 | Black | PA6 10% GF & 20% GB |

Side Lock Covers (SLC) are included in the Connector Assemblies listed in this section.

**NOTE:** Specifications in this catalog are for general reference only and are subject to change without notice. To verify product information, please contact a Delphi representative.

# 150/280 Mixed

## Unsealed System Application Information

### GT 150 Series Terminals – Tin Plated

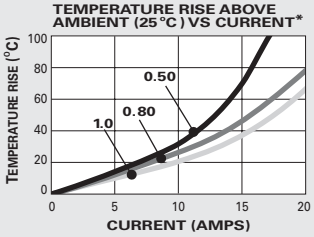


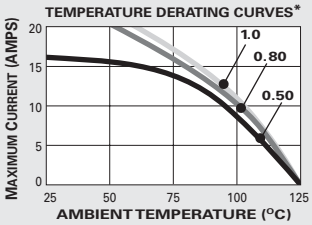


CABLE RANGE (mm²): ..... 0.35-1.0
CURRENT RANGE (AMPS): ..... 0-15
TEMP RANGE °C: ..... -40 to 125
RESISTANCE: ..... <10mΩ@20mV

VOLTAGE DROP: ... <10.0mV/amp
CENTERLINE SPACING (mm): ..... 4.0
BLADE WIDTH (mm): ..... 1.5

### 280 Series Terminals – Tin Plated

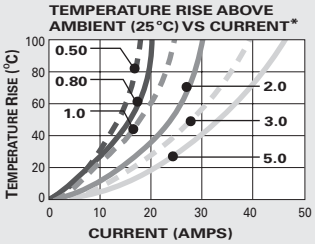


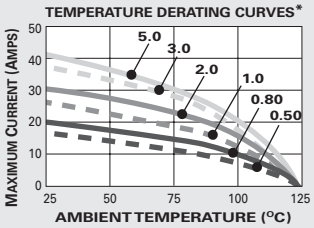


CABLE RANGE (mm²): ..... 0.35-5.0
CURRENT RANGE (AMPS): ..... 0-25
TEMP RANGE °C: ..... -40 to 125
RESISTANCE: ..... <10mΩ@20mV

VOLTAGE DROP: ..... <4.0mV/amp
CENTERLINE SPACING (mm): ..... 5.5
BLADE WIDTH (mm): ..... 2.8

*The test data are based on single circuits in free space and were generated using a "Lumped Resistance" model. This model does not account for all of the variables that would be present in an actual application. For actual product performance, contact your regional support representative.

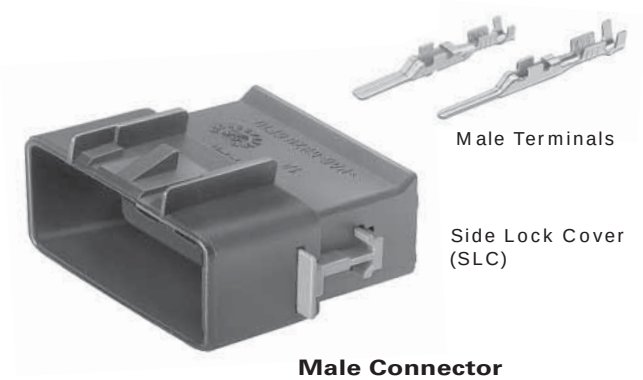


**Male Connector Assembly**

### GT 150 Male Terminals Unsealed

| Part # | Cable Range (mm²) | Material | Plating |
|---|---|---|---|
| 15304701 | 0.50-0.35 | Tin Brass | Tin |
| 15304702 | 1.00-0.75 | Tin Brass | Tin |

### GT 280 Male Terminals Unsealed

| Part # | Cable Range (mm²) | Material | Plating |
|---|---|---|---|
| 15304722 | 0.50-0.35 | Tin Brass | Tin |
| 15304723 | 1.00-0.75 | Tin Brass | Tin |
| 15304724 | 3.00-1.50 | Tin Brass | Tin |
| 15304725 | 5.00-4.00 | Tin Brass | Tin |

### GT Mixed Male Connector Assemblies Unsealed

| # Cavities | Connector | Color | Material |
|---|---|---|---|
| 12 | 15336209 | Black | PA6 10% GF & 20% GB |
| 16 | 15336224 | Black | PA6 10% GF & 20% GB |

Side Lock Covers (SLC) are included in the Connector Assemblies listed in this section.

SECTION NOTES:

- Due to rigid tolerances of connector cavities, it is critical to meet all crimp dimensions as specified.
- Special consideration must be used when applying terminals 15304713 and 15304725 due to cavity space limitations.

**NOTE:** Specifications in this catalog are for general reference only and are subject to change without notice. To verify product information, please contact a Delphi representative.

# 150/280 Mixed

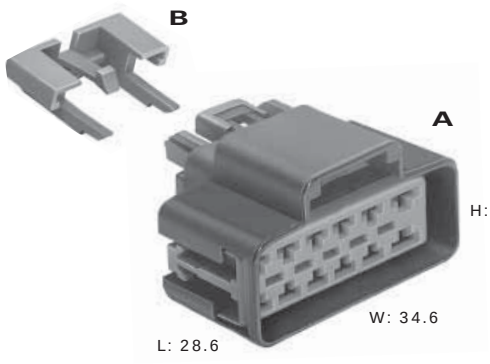


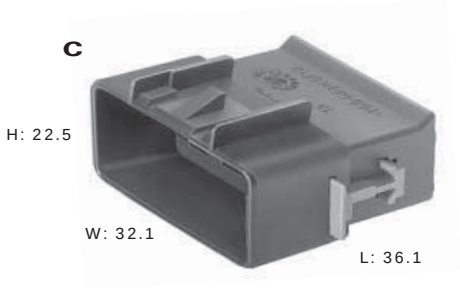


Total Mated Length: 56.7mm

### A. Part No: 15336205

| | |
|---|---|
| Description: | Connector Assembly 12F |
| Size: | 28.6L x 26.2H x 34.6W |
| Color: | Black |
| Material: | PA6 10% GF & 20% GB |
| Terminals: | See Page 1.24 |

### Part No: 15336219

| | |
|---|---|
| Description: | Connector Assembly 16F |
| Size: | 28.6L x 26.2H x 42.6W |
| Color: | Black |
| Material: | PA6 10% GF & 20% GB |
| Terminals: | See Page 1.24 |

### Part No: 15326082

| | |
|---|---|
| Description: | Connector Assembly 18F |
| Size: | 28.6L x 26.2H x 46.6W |
| Color: | Black |
| Material: | PA6 10% GF & 20% GB |
| Terminals: | See Page 1.24 |

### B. Part No: 15317832

| | |
|---|---|
| Description: | CPA |
| Color: | Gray |
| Material: | PA6 10% GF & 20% GB |

### C. Part No: 15336209

| | |
|---|---|
| Description: | Connector Assembly 12M |
| Size: | 36.1L x 22.5H x 32.1W |
| Color: | Black |
| Material: | PA6 10% GF & 20% GB |
| Terminals: | See Page 1.25 |

### Part No: 15336224

| | |
|---|---|
| Description: | Connector Assembly 16M |
| Size: | 36.1L x 22.5H x 40.1W |
| Color: | Black |
| Material: | PA6 10% GF & 20% GB |
| Terminals: | See Page 1.25 |

**KEY:**

- ◪ 150 SERIES
- ■ 280 SERIES

Mixed connectors feature a combination of different terminal cavities, as indicated by the key.

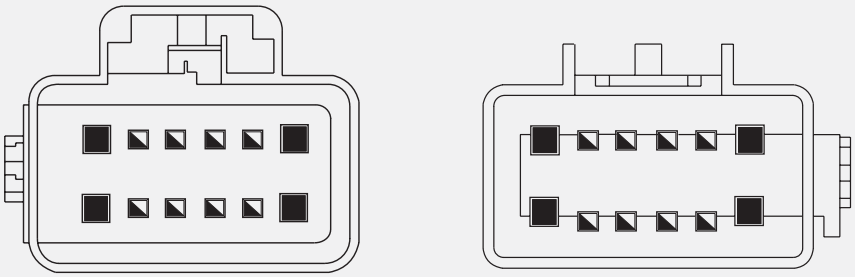

**NOTE:** Specifications in this catalog are for general reference only and are subject to change without notice. To verify product information, please contact a Delphi representative.

# 150/280 Mixed

## Cross Sectional View

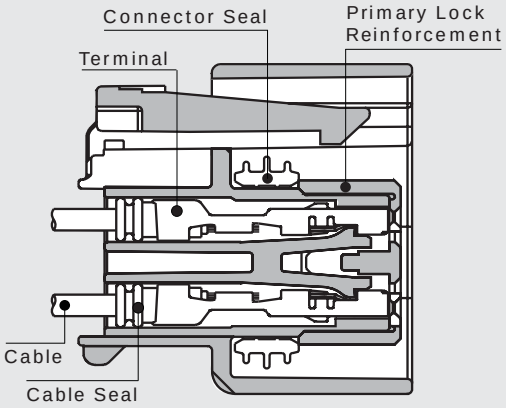


**Female Connector Assembly**

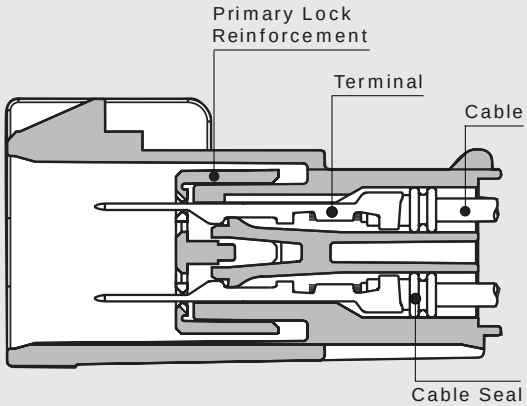


**Male Connector Assembly**

150

280

### GT 150 Female Terminals Sealed

| Part # | Cable Range (mm²) | Material | Plating |
|---|---|---|---|
| 12191818 | 0.50-0.35 | Tin Brass | Tin |
| 12191819 | 1.00-0.75 | Tin Brass | Tin |

### GT 280 Female Terminals Sealed

| Part # | Cable Range (mm²) | Material | Plating |
|---|---|---|---|
| 15304718 | 0.50-0.35 | Tin Brass | Tin |
| 15304719 | 1.00-0.75 | Tin Brass | Tin |
| 15304720 † | 3.00-1.50 | Tin Brass | Tin |
| 15326004 | 5.00-4.00 | Beryllium Copper | Tin |

### GT 150 Cable Seals

| Reel Part # | Loose Part # | Cable Diameter | Material | Color |
|---|---|---|---|---|
| 12191152 | 15366021 | 1.20-1.90 | Silicone | White |
| 12191153 | 15366060 | 1.86-2.40 | Silicone | Blue |

### GT 280 Cable Seals

| Reel Part # | Loose Part # | Cable Diameter | Material | Color |
|---|---|---|---|---|
| 12191221 | 15366065 | 1.20-1.85 | Silicone | Orange |
| 12191222 | 15366066 | 1.86-2.25 | Silicone | Yellow |
| 12191223 | 15366067 | 2.50-3.20 | Silicone | Tan |
| – | 12191235 | 3.40-3.90 | Silicone | Purple |
| – | 15336674 † | 2.70-3.20 | Silicone | Blue |

† Note: If cable seal 15336674 is used with terminal 15304720, connector cavity needs to be designed with 5.2mm diameter sealing surface.

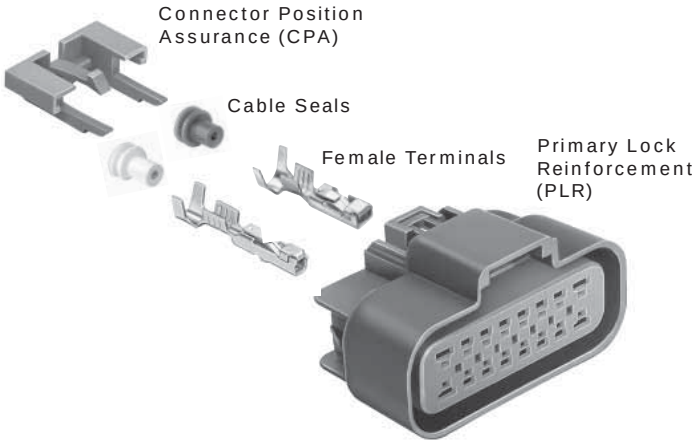


**Female Connector Assembly**

### GT Mixed Female Connector Assemblies Sealed

| # Cavities | Connector | Color | Material |
|---|---|---|---|
| 12 | 15326939 | Black | PA6 10% GF & 20% GB |
| 14 | 15336037 | Black | PA6 10% GF & 20% GB |
| 16 | 15326084 | Black | PA6 10% GF & 20% GB |

Primary Lock Reinforcement (PLR) and Connector Seals are included in the Connector Assemblies listed in this section.

**NOTE:** Specifications in this catalog are for general reference only and are subject to change without notice. To verify product information, please contact a Delphi representative.

# 150/280 Mixed

## Sealed System Application Information

### GT 150 Series Terminals – Tin Plated

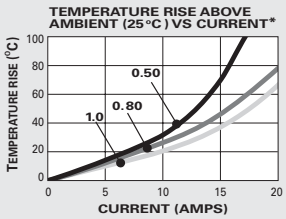


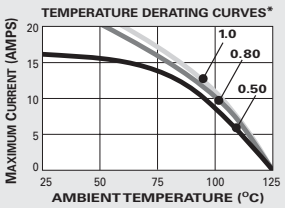


CABLE RANGE (mm²): ..... 0.35-1.0
CURRENT RANGE (AMPS): ..... 0-15
TEMP RANGE °C: ..... -40 to 125
RESISTANCE: ..... <10mΩ@20mV

VOLTAGE DROP: ... <10.0mV/amp
CENTERLINE SPACING (mm): ..... 4.5
BLADE WIDTH (mm): ..... 1.5

### 280 Series Terminals – Tin Plated

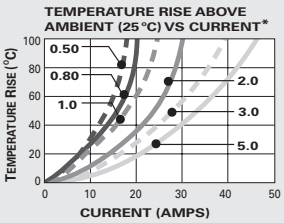


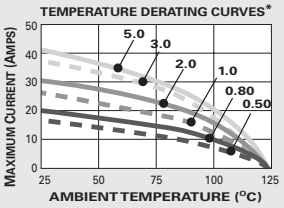


CABLE RANGE (mm²): ..... 0.35-5.0
CURRENT RANGE (AMPS): ..... 0-25
TEMP RANGE °C: ..... -40 to 125
RESISTANCE: ..... <10mΩ@20mV

VOLTAGE DROP: ..... <4.0mV/amp
CENTERLINE SPACING (mm): ..... 6.5
BLADE WIDTH (mm): ..... 2.8

*The test data are based on single circuits in free space and were generated using a "Lumped Resistance" model. This model does not account for all of the variables that would be present in an actual application. For actual product performance, contact your regional support representative.

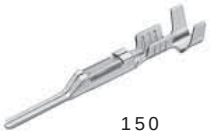

150

280

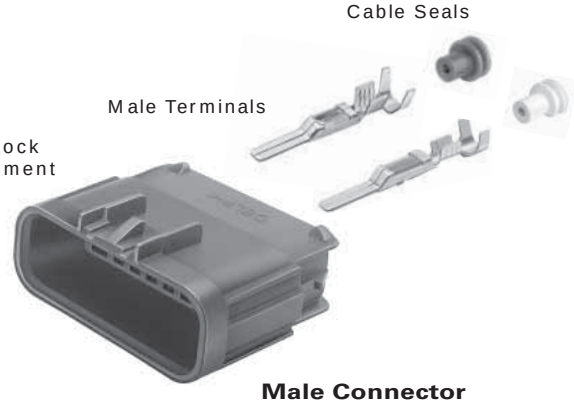


**Male Connector Assembly**

### GT 150 Male Terminals Sealed

| Part # | Cable Range (mm²) | Material | Plating |
|---|---|---|---|
| 15326268 | 0.50-0.35 | Tin Brass | Tin |
| 15326269 | 1.00-0.75 | Tin Brass | Tin |

### GT 280 Male Terminals Sealed

| Part # | Cable Range (mm²) | Material | Plating |
|---|---|---|---|
| 15304730 | 0.50-0.35 | Tin Brass | Tin |
| 15304731 | 1.00-0.75 | Tin Brass | Tin |
| 15304732 | 3.00-1.50 | Tin Brass | Tin |

150

280

### GT Mixed Male Connector Assemblies Sealed

| # Cavities | Connector | Color | Material |
|---|---|---|---|
| 12 | 15336034 | Black | PA6 10% GF & 20% GB |
| 14 | 15422562 | Black | PBT 20% GF |
| 16 | 15326085 | Black | PA6 10% GF & 20% GB |

Primary Lock Reinforcement (PLR) is included in the Connector Assemblies listed in this section.

### GT 150 Cavity Plug*

| Part # | Cavity Diameter | Material | Color |
|---|---|---|---|
| 15305171 | 4.0mm | Silicone | Green |

* Cavity plugs seal unused female and male cavities.

### GT 280 Cavity Plug*

| Part # | Cavity Diameter | Material | Color |
|---|---|---|---|
| 15305170 | 5.8mm | Silicone | White |

* Cavity plugs seal unused female and male cavities.

### SECTION NOTES:

- Due to rigid tolerances of connector cavities, it is critical to meet all crimp dimensions as specified.

**NOTE:** Specifications in this catalog are for general reference only and are subject to change without notice. To verify product information, please contact a Delphi representative.

# 150/280 Mixed

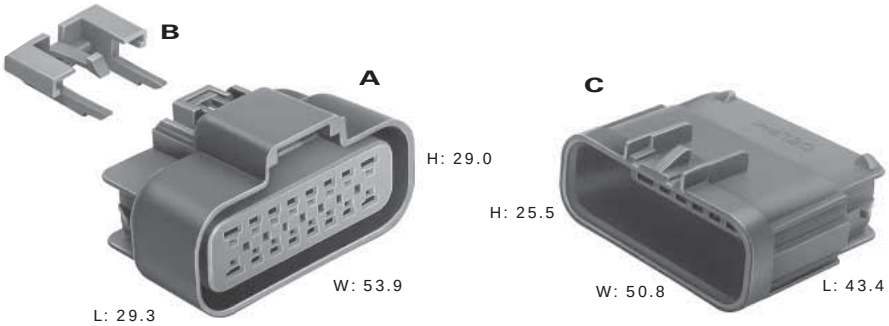


Total Mated Length: 56.7mm

### A. Part No: 15326939

| | |
|---|---|
| Description: | Connector Assembly 12F |
| Size: | 29.3L x 29.0H x 44.9W |
| Color: | Black |
| Material: | PA6 10% GF & 20% GB |
| Terminals: | See Page 1.28 |
| Seals/Plugs: | See Page 1.28, 1.29 |

### Part No: 15336037

| | |
|---|---|
| Description: | Connector Assembly 14F |
| Size: | 29.3L x 29.0H x 49.4W |
| Color: | Black |
| Material: | PA6 10% GF & 20% GB |
| Terminals: | See Page 1.28 |
| Seals/Plugs: | See Page 1.28, 1.29 |

### Part No: 15326084

| | |
|---|---|
| Description: | Connector Assembly 16F |
| Size: | 29.3L x 29.0H x 53.9W |
| Color: | Black |
| Material: | PA6 10% GF & 20% GB |
| Terminals: | See Page 1.28 |
| Seals/Plugs: | See Page 1.28, 1.29 |

### B. Part No: 15317832

| | |
|---|---|
| Description: | CPA |
| Color: | Gray |
| Material: | PA6 10% GF & 20% GB |

### C. Part No: 15336034

| | |
|---|---|
| Description: | Connector Assembly 12M |
| Size: | 43.4L x 25.5H x 41.8W |
| Color: | Black |
| Material: | PA6 10% GF & 20% GB |
| Terminals: | See Page 1.29 |
| Seals/Plugs: | See Page 1.28, 1.29 |

### Part No: 15422562

| | |
|---|---|
| Description: | Connector Assembly 14M |
| Size: | 43.4L x 25.5H x 46.3W |
| Color: | Black |
| Material: | PBT 20% GF |
| Terminals: | See Page 1.29 |
| Seals/Plugs: | See Page 1.28, 1.29 |

### Part No: 15326085

| | |
|---|---|
| Description: | Connector Assembly 16M |
| Size: | 43.4L x 25.5H x 50.8W |
| Color: | Black |
| Material: | PA6 10% GF & 20% GB |
| Terminals: | See Page 1.29 |
| Seals/Plugs: | See Page 1.28, 1.29 |

**KEY:**

- ◪ 150 SERIES
- ■ 280 SERIES

Mixed connectors feature a combination of different terminal cavities, as indicated by the key.

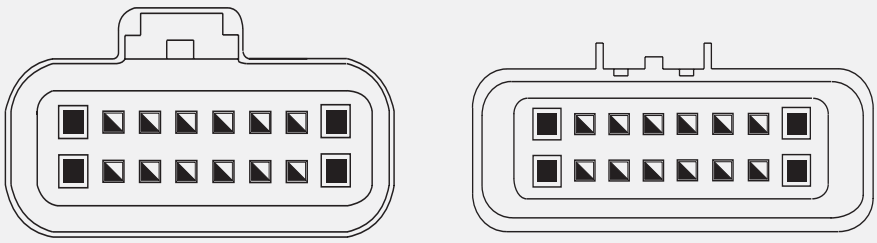

**NOTE:** Specifications in this catalog are for general reference only and are subject to change without notice. To verify product information, please contact a Delphi representative.

# Lever Lock

## Cross Sectional View

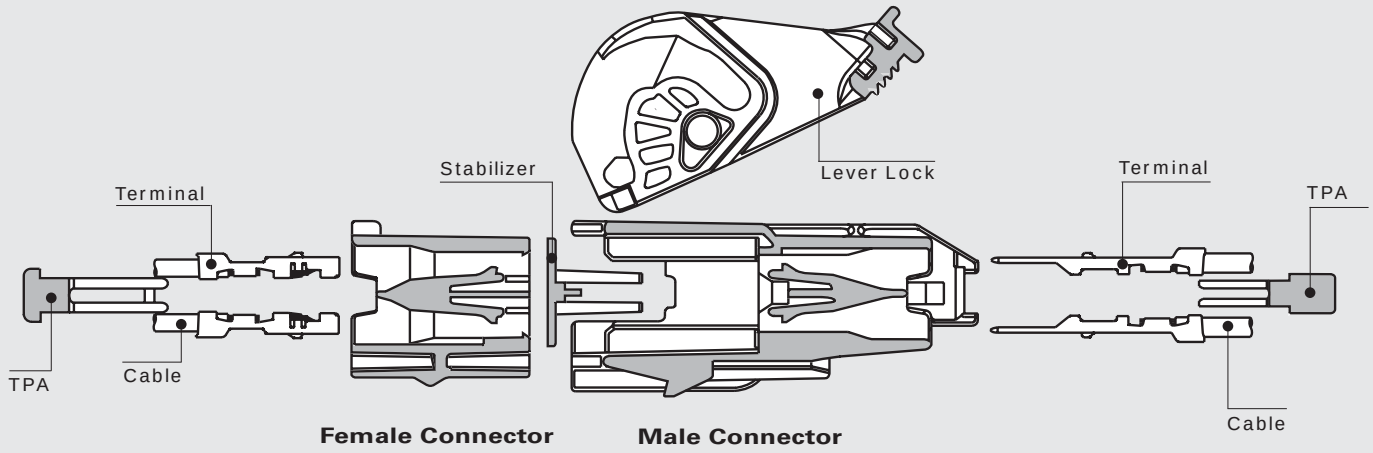

Female Terminals

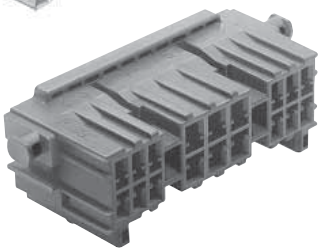

Female Connector

### GT 150 Female Terminals Unsealed

| Part # | Cable Range (mm²) | Material | Plating |
|---|---|---|---|
| 12191811 | 0.50-0.35 | Tin Brass | Tin |
| 12191812 | 1.00-0.75 | Tin Brass | Tin |

### GT 280 Female Terminals Unsealed

| Part # | Cable Range (mm²) | Material | Plating |
|---|---|---|---|
| 15304710 | 0.50-0.35 | Tin Brass | Tin |
| 15304711 | 1.00-0.75 | Tin Brass | Tin |
| 15304712 | 3.00-1.50 | Tin Brass | Tin |
| 15304713 | 5.00-4.00 | Tin Brass | Tin |

### GT Female Lever Lock Connectors Unsealed

| # Cavities | Connector | Color | Material | TPA |
|---|---|---|---|---|
| 18 | 15304692 | Black | PA66 HS IM | 15304694 |
| 22 | 15317325 | Lt. Gray | PA66 HS IM | 15317326 |
| 30 | 15304908 | Black | PA66 HS IM | 15304913 |
| 40 | 15359287 | Black | PA66 HS IM | 15304842 |

**NOTE:** Specifications in this catalog are for general reference only and are subject to change without notice. To verify product information, please contact a Delphi representative.

# Lever Lock

## Unsealed System Application Information

### GT 150 Series Terminals – Tin Plated

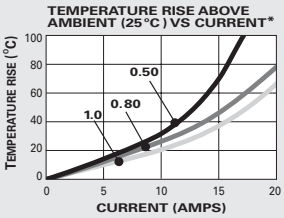


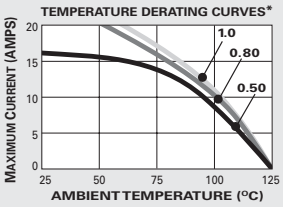


CABLE RANGE (mm²): ..... 0.35-1.0
CURRENT RANGE (AMPS): ..... 0-15
TEMP RANGE °C: ..... -40 to 125
RESISTANCE: ..... <10mΩ@20mV

VOLTAGE DROP: ... <10.0mV/amp
CENTERLINE SPACING (mm): ..... 4.0
BLADE WIDTH (mm): ..... 1.5

### 280 Series Terminals – Tin Plated

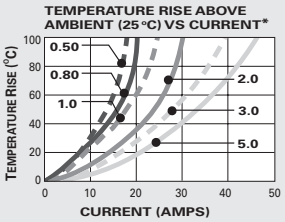


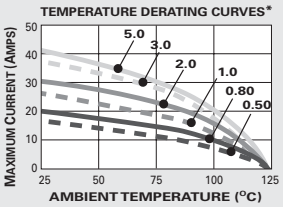


CABLE RANGE (mm²): ..... 0.35-5.0
CURRENT RANGE (AMPS): ..... 0-25
TEMP RANGE °C: ..... -40 to 125
RESISTANCE: ..... <10mΩ@20mV

VOLTAGE DROP: ..... <4.0mV/amp
CENTERLINE SPACING (mm): ..... 5.5
BLADE WIDTH (mm): ..... 2.8

*The test data are based on single circuits in free space and were generated using a "Lumped Resistance" model. This model does not account for all of the variables that would be present in an actual application. For actual product performance, contact your regional support representative.

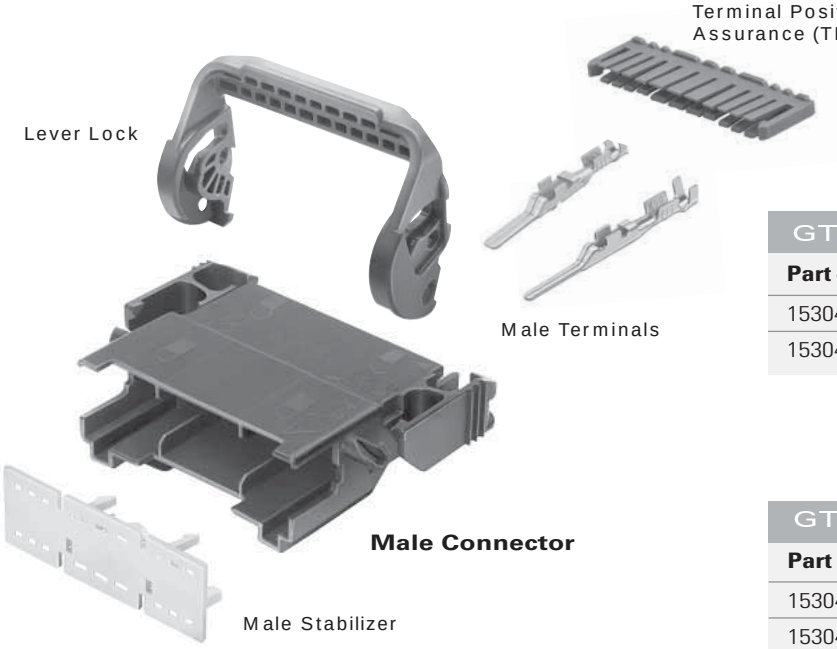

### GT 150 Male Terminals Unsealed

| Part # | Cable Range (mm²) | Material | Plating |
|---|---|---|---|
| 15304701 | 0.50-0.35 | Tin Brass | Tin |
| 15304702 | 1.00-0.75 | Tin Brass | Tin |

### GT 280 Male Terminals Unsealed

| Part # | Cable Range (mm²) | Material | Plating |
|---|---|---|---|
| 15304722 | 0.50-0.35 | Tin Brass | Tin |
| 15304723 | 1.00-0.75 | Tin Brass | Tin |
| 15304724 | 3.00-1.50 | Tin Brass | Tin |
| 15304725 | 5.00-4.00 | Tin Brass | Tin |

### GT Male Lever Lock Connectors Unsealed

| # Cavities | Connector | Color | Material | TPA | Stabilizer | Lever Lock |
|---|---|---|---|---|---|---|
| 18 | 15336468 | Black | PA66 HS IM | 15304695 | 15418982 | 15317550 |
| 22 | 15317322 | Lt.Gray | PA66 HS IM | 15317323 | 15418983 | 15317321 |
| 30 | 15326762 | Black | PA66 HS IM | 15304912 | 15418984 | 15326799 |
| 40 | 15475869 | Black | PA66 HS IM | 15304841 | 15445756 | 15336387 |

**SECTION NOTES:**

- Due to rigid tolerances of connector cavities, it is critical to meet all crimp dimensions as specified.
- Special consideration must be used when applying terminals 15304713 and 15304725 due to cavity space limitations.

**NOTE:** Specifications in this catalog are for general reference only and are subject to change without notice. To verify product information, please contact a Delphi representative.

# Lever Lock

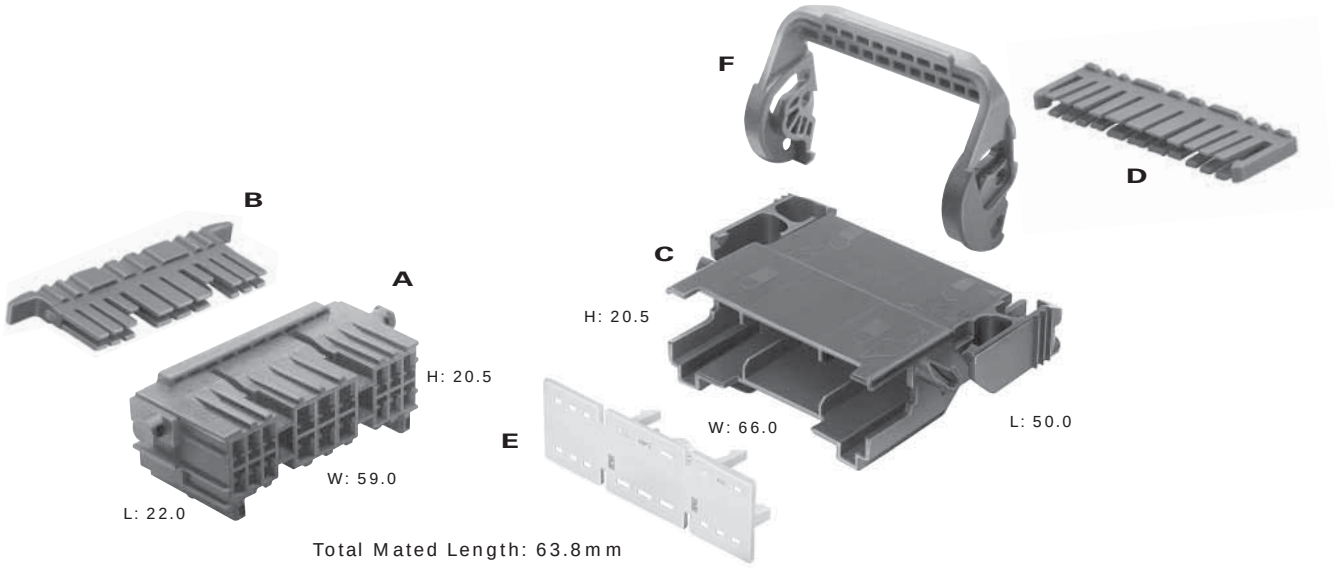


Total Mated Length: 63.8mm

### A. Part No: 15304692 (Black)
### 15304690 (Md. Gray)

| | |
|---|---|
| Description: | Connector 18F |
| Size: | 22.0L x 20.5H x 59.0W |
| Material: | PA66 HS IM |
| Terminals: | See Page 1.32 |

### B. Part No: 15304694

| | |
|---|---|
| Description: | TPA |
| Color: | Blue |
| Material: | PBT |

### C. Part No: 15336468 (Black)
### 15336467 (Md. Gray)

| | |
|---|---|
| Description: | Connector 18M |
| Size: | 50.0L x 20.5H x 66.0W |
| Material: | PA66 HS IM |
| Terminals: | See Page 1.33 |
| Clip: | 12084149 |

### D. Part No: 15304695

| | |
|---|---|
| Description: | TPA |
| Color: | Blue |
| Material: | PBT |

### E. Part No: 15418982

| | |
|---|---|
| Description: | Stabilizer |
| Color: | Natural |
| Material: | PA66 HS IM |

### F. Part No: 15317550

| | |
|---|---|
| Description: | Lever Lock |
| Color: | Purple |
| Material: | PA66 HS IM |

**KEY:**
- ◪ 150 SERIES
- ■ 280 SERIES

Mixed connectors feature a combination of different terminal cavities, as indicated by the key.

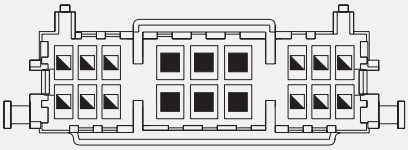

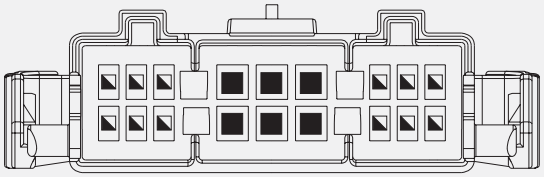

**NOTE:** Specifications in this catalog are for general reference only and are subject to change without notice. To verify product information, please contact a Delphi representative.

# Lever Lock

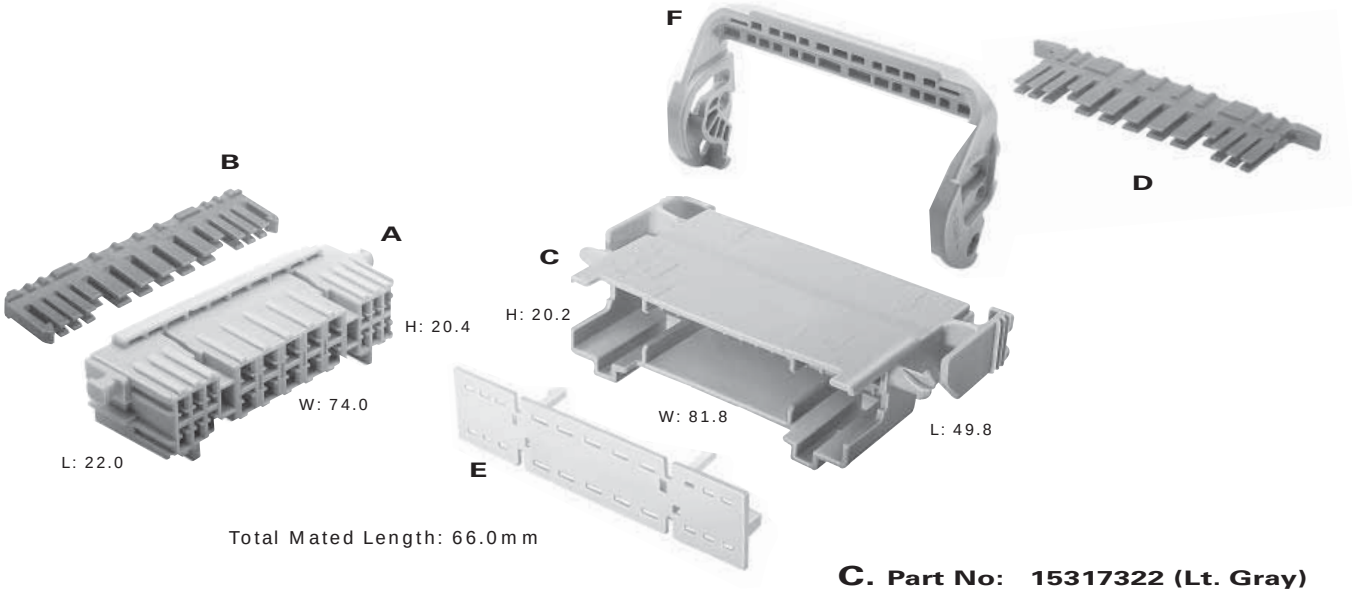


Total Mated Length: 66.0mm

**A. Part No: 15317325 (Lt. Gray)**
**15326063 (Md. Gray)**

| | |
|---|---|
| Description: | Connector 22F |
| Size: | 22.0L x 20.4H x 74.0W |
| Material: | PA66 HS IM |
| Terminals: | See Page 1.32 |

**B. Part No: 15317326**

| | |
|---|---|
| Description: | TPA |
| Color: | Blue |
| Material: | PBT |

**C. Part No: 15317322 (Lt. Gray)**
**15326064 (Md. Gray)**

| | |
|---|---|
| Description: | Connector 22M |
| Size: | 49.8L x 20.2H x 81.8W |
| Material: | PA66 HS IM |
| Terminals: | See Page 1.33 |
| Clip: | 12110290 |

**D. Part No: 15317323**

| | |
|---|---|
| Description: | TPA |
| Color: | Blue |
| Material: | PBT |

**E. Part No: 15418983**

| | |
|---|---|
| Description: | Stabilizer |
| Color: | Natural |
| Material: | PA66 HS IM |

**F. Part No: 15317321**

| | |
|---|---|
| Description: | Lever Lock |
| Color: | Blue |
| Material: | PA66 HS IM |

**KEY:**
- ◪ 150 SERIES
- ■ 280 SERIES

Mixed connectors feature a combination of different terminal cavities, as indicated by the key.

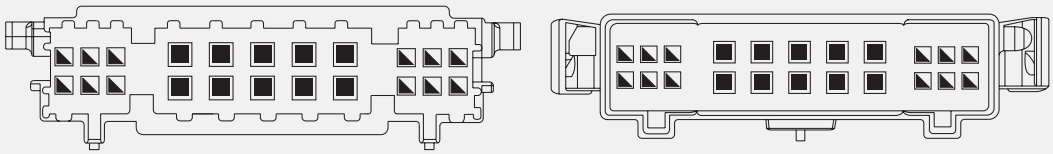

**NOTE:** Specifications in this catalog are for general reference only and are subject to change without notice. To verify product information, please contact a Delphi representative.

# Lever Lock

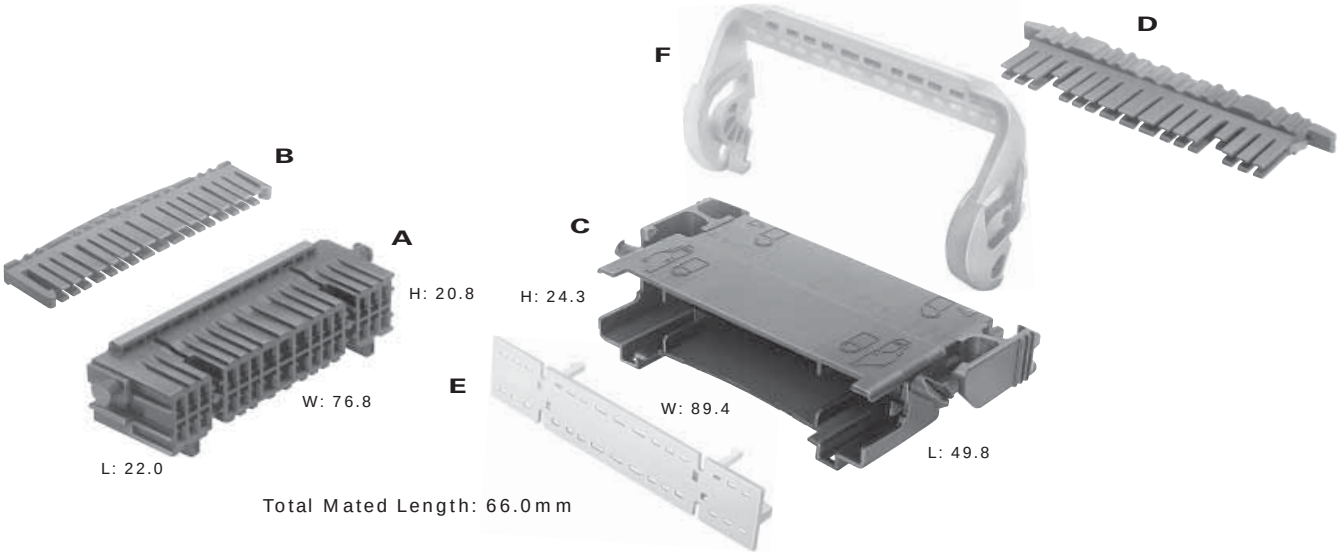


### A. Part No: 15304908

| | |
|---|---|
| Description: | Connector 30F |
| Size: | 22.0L x 20.8H x 76.8W |
| Color: | Black |
| Material: | PA66 HS IM |
| Terminals: | See Page 1.32 |

### B. Part No: 15304913

| | |
|---|---|
| Description: | TPA |
| Color: | Blue |
| Material: | PBT |

### C. Part No: 15326762

| | |
|---|---|
| Description: | Connector 30M |
| Size: | 49.8L x 24.3H x 89.4W |
| Color: | Black |
| Material: | PA66 HS IM |
| Terminals: | See Page 1.33 |

### D. Part No: 15304912

| | |
|---|---|
| Description: | TPA |
| Color: | Blue |
| Material: | PBT |

### E. Part No: 15418984

| | |
|---|---|
| Description: | Stabilizer |
| Color: | Natural |
| Material: | PA66 HS IM |

### F. Part No: 15326799

| | |
|---|---|
| Description: | Lever Lock |
| Color: | Natural |
| Material: | PA66 HS IM 14% GF |

**KEY:**

- ◪ 150 SERIES
- ■ 280 SERIES

Mixed connectors feature a combination of different terminal cavities, as indicated by the key.

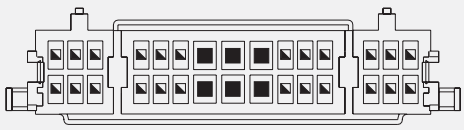

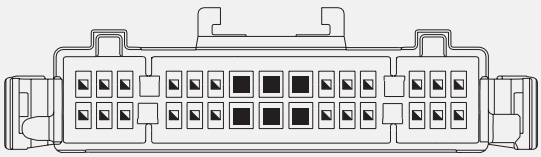

**NOTE:** Specifications in this catalog are for general reference only and are subject to change without notice. To verify product information, please contact a Delphi representative.

# Lever Lock

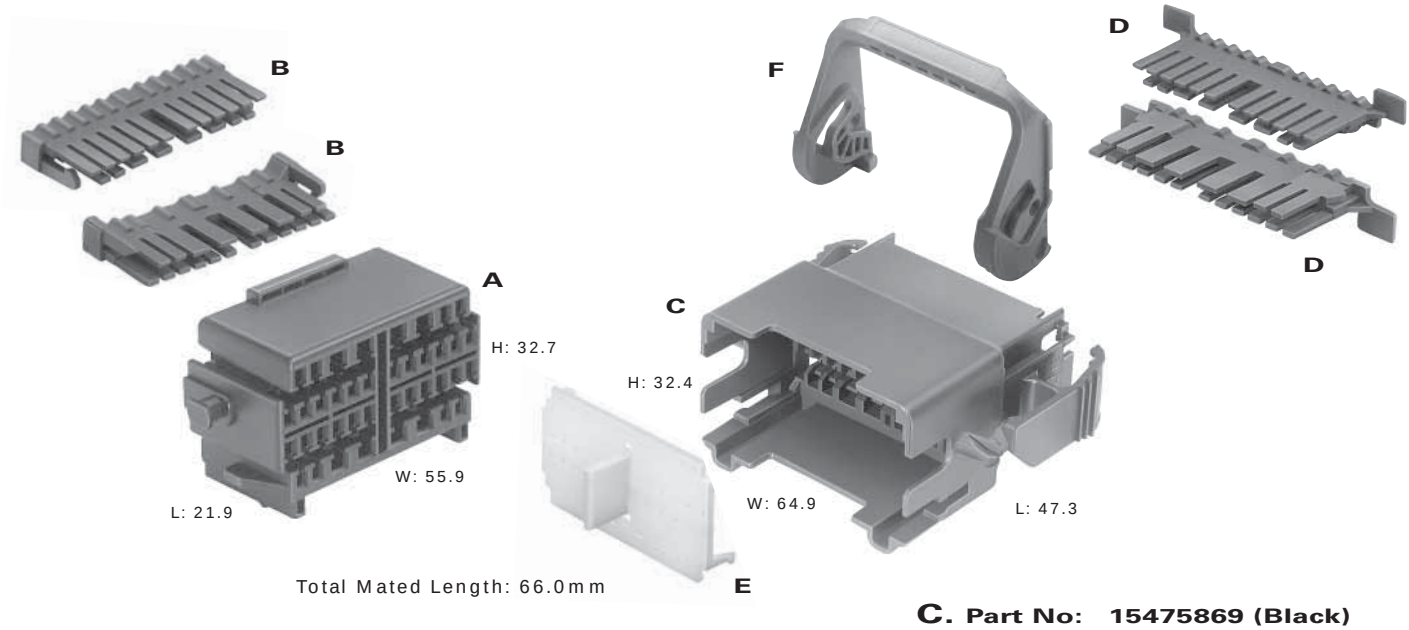


Total Mated Length: 66.0mm

**A. Part No: 15359287 (Black)**
**15393744 (Gray)**

| | |
|---|---|
| Description: | Connector 40F |
| Size: | 21.9L x 32.7H x 55.9W |
| Material: | PA66 HS IM |
| Terminals: | See Page 1.32 |

**B. Part No: 15304842**

| | |
|---|---|
| Description: | TPA |
| Number Req: | 2 |
| Color: | Blue |
| Material: | PBT |

**C. Part No: 15475869 (Black)**
**15475870 (Gray)**

| | |
|---|---|
| Description: | Connector 40M |
| Size: | 47.3L x 32.4H x 64.9W |
| Material: | PA66 HS IM |
| Terminals: | See Page 1.33 |

**D. Part No: 15304841**

| | |
|---|---|
| Description: | TPA |
| Number Req: | 2 |
| Color: | Blue |
| Material: | PBT |

**E. Part No: 15445756**

| | |
|---|---|
| Description: | Stabilizer |
| Color: | Blue |
| Material: | PA66 HS IM |

**F. Part No: 15336387**

| | |
|---|---|
| Description: | Lever Lock |
| Color: | Natural |
| Material: | PA66 HS IM 14% GF |

**KEY:**
- ◪ 150 SERIES
- ■ 280 SERIES

Mixed connectors feature a combination of different terminal cavities, as indicated by the key.

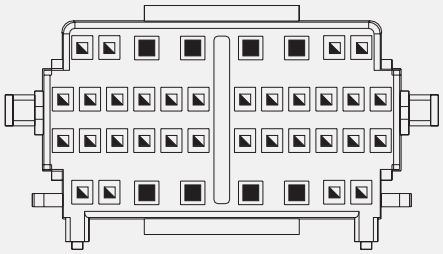

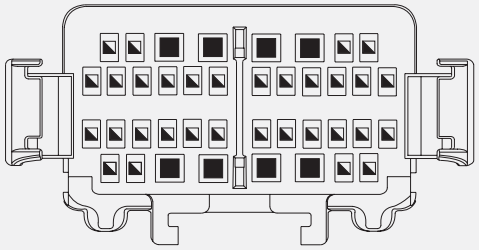

**NOTE:** Specifications in this catalog are for general reference only and are subject to change without notice. To verify product information, please contact a Delphi representative.

# Lever Lock

## Cross Sectional View

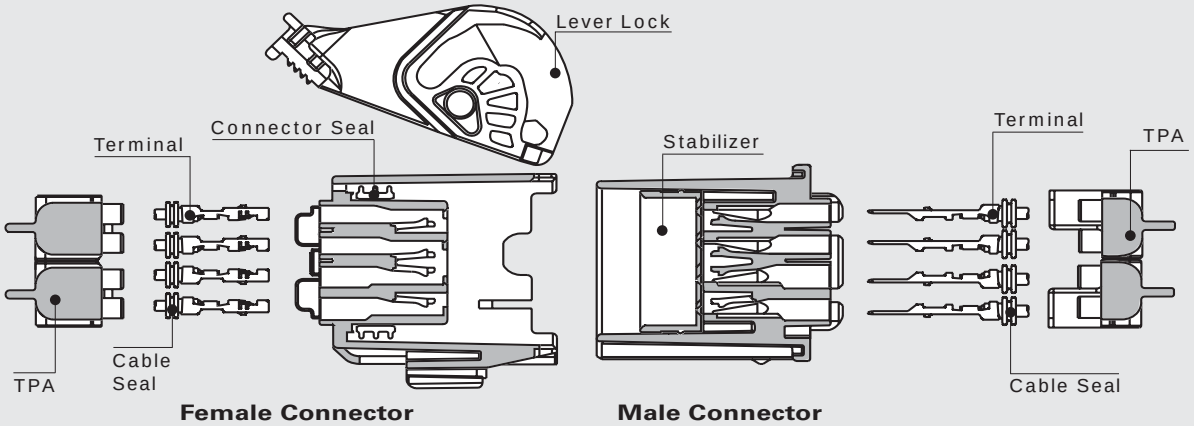


### GT 150 Female Terminals Sealed

| Part # | Cable Range (mm²) | Material | Plating |
|---|---|---|---|
| 12191818 | 0.50-0.35 | Tin Brass | Tin |
| 12191819 | 1.00-0.75 | Tin Brass | Tin |

### GT 280 Female Terminals Sealed

| Part # Dia. 5.2 (mm) | Part # Dia. 5.8 (mm) | Cable Range (mm²) | Material | Plating |
|---|---|---|---|---|
| 15304715 | 15304718 | 0.50-0.35 | Tin Brass | Tin |
| 15304716 | 15304719 | 1.00-0.75 | Tin Brass | Tin |
| 15304717 | – | 2.00-1.50 | Tin Brass | Tin |
| – | 15304720 † | 3.00-1.50 | Tin Brass | Tin |
| – | 15326004 | 5.00-4.00 | Beryllium Copper | Tin |

### GT 150 Cable Seals

| Reel Part # | Loose Part # | Cable Dia. | Material | Color |
|---|---|---|---|---|
| 12191152 | 15366021 | 1.20-1.90 | Silicone | White |
| 12191153 | 15366060 | 1.86-2.40 | Silicone | Blue |

### GT 280 Cable Seals

| | Reel Part # | Loose Part # | Cable Dia. | Material | Color |
|---|---|---|---|---|---|
| 280 5.8mm | 12191221 | 15366065 | 1.20-1.85 | Silicone | Orange |
| | 12191222 | 15366066 | 1.86-2.25 | Silicone | Yellow |
| | 12191223 | 15366067 | 2.50-3.20 | Silicone | Tan |
| | – | 12191235 | 3.40-3.90 | Silicone | Purple |
| | – | 15336674† | 2.70-3.20 | Silicone | Blue |
| 280 5.2mm | 12191156 | 15366063 | 1.20-1.85 | Silicone | Gray |
| | 12191157 | 15366064 | 1.86-2.25 | Silicone | Purple |
| | 12191154 | 15366061 | 2.09-2.66 | Silicone | Dk. Red |

† Note: If cable seal 15336674 is used with terminal 15304720, connector cavity needs to be designed with 5.2mm diameter sealing surface.

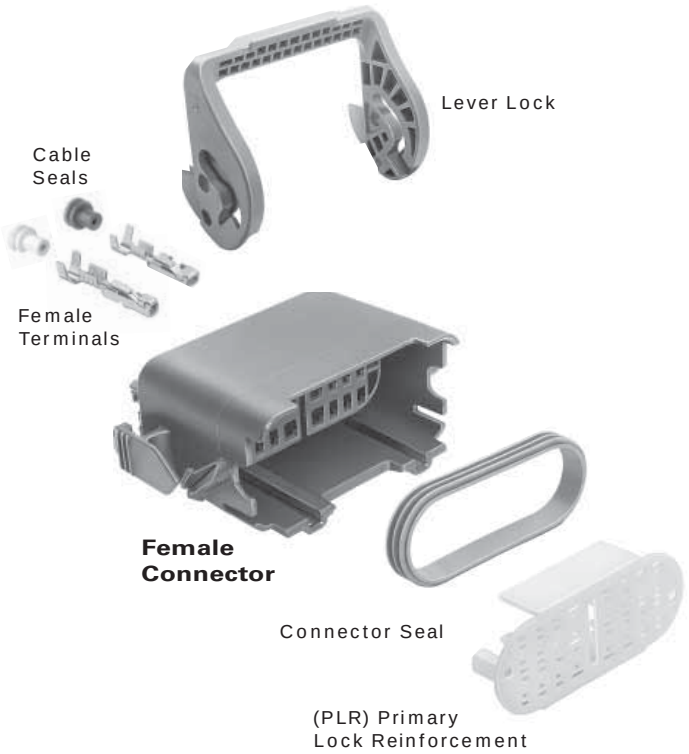


### GT Female Lever Lock Connectors Sealed

| # Cavities | Connector | Color | Material | PLR | TPA | Connector Seal | Lever Lock |
|---|---|---|---|---|---|---|---|
| 24 | 15366099 | Black | PA6 10%GF & 20% GB | 15373422 | – | 15336177 | 15369322 |
| 38 | 15443822 | Black | PA66 HS IM | – | 15304904 | 15304905 | 15336267 |

**NOTE:** Specifications in this catalog are for general reference only and are subject to change without notice. To verify product information, please contact a Delphi representative.

# Lever Lock

## Sealed System Application Information

### GT 150 Series Terminals – Tin Plated

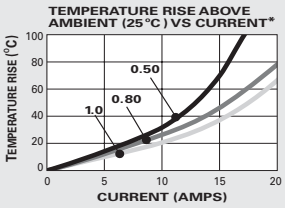


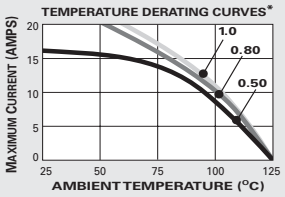


CABLE RANGE (mm²): ..... 0.35-1.0
CURRENT RANGE (AMPS): ..... 0-15
TEMP RANGE °C: ..... -40 to 125
RESISTANCE: ..... <10mΩ@20mV

VOLTAGE DROP: ... <10.0mV/amp
CENTERLINE SPACING (mm): ..... 4.5
BLADE WIDTH (mm): ..... 1.5

### 280 Series Terminals – Tin Plated

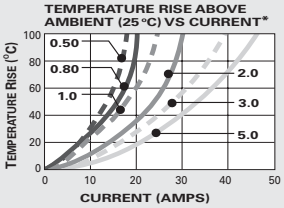


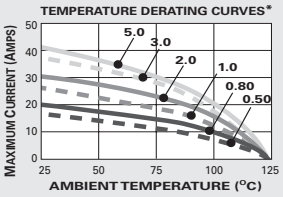


CABLE RANGE (mm²): ..... 0.35-5.0
CURRENT RANGE (AMPS): ..... 0-25
TEMP RANGE °C: ..... -40 to 125
RESISTANCE: ..... <10mΩ@20mV

VOLTAGE DROP: ..... <4.0mV/amp
CENTERLINE SPACING (mm): ..... 6.5
BLADE WIDTH (mm): ..... 2.8

*The test data are based on single circuits in free space and were generated using a "Lumped Resistance" model. This model does not account for all of the variables that would be present in an actual application. For actual product performance, contact your regional support representative.

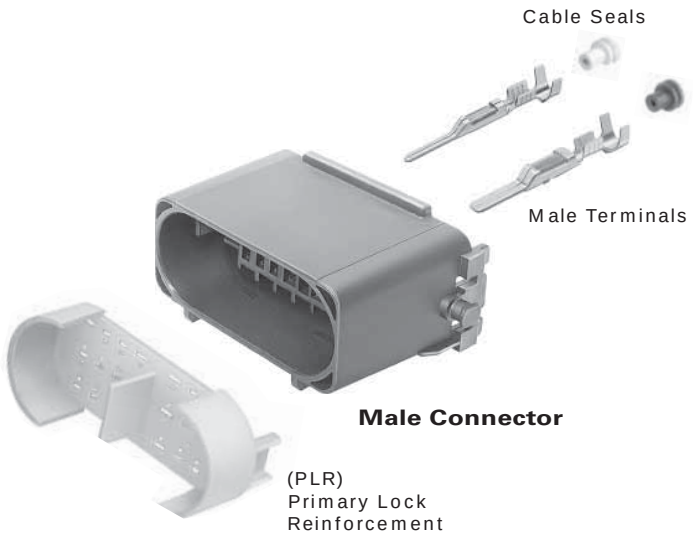

### GT 150 Male Terminals Sealed

| Part # | Cable Range (mm²) | Material | Plating |
|---|---|---|---|
| 15326268 | 0.50-0.35 | Tin Brass | Tin |
| 15326269 | 1.00-0.75 | Tin Brass | Tin |

### GT 280 Male Terminals Sealed

| Part # Dia. 5.2 (mm) | Part # Dia. 5.8 (mm) | Cable Range (mm²) | Material | Plating |
|---|---|---|---|---|
| 15304727 | 15304730 | 0.50-0.35 | Tin Brass | Tin |
| 15304728 | 15304731 | 1.00-0.75 | Tin Brass | Tin |
| – | 15304732 | 3.00-1.50 | Tin Brass | Tin |
| 15304729 | – | 2.00-1.50 | Tin Brass | Tin |

### GT 150 Cavity Plug*

| Part # | Cavity Diameter | Material | Color |
|---|---|---|---|
| 15305171 | 4.0mm | Silicone | Green |

*Cavity plugs seal unused female and male cavities.

**SECTION NOTES:**

- Due to rigid tolerances of connector cavities, it is critical to meet all crimp dimensions as specified.

### GT Male Lever Lock Connectors Sealed

| # Cavities | Connector | Color | Material | PLR | TPA | Stabilizer |
|---|---|---|---|---|---|---|
| 24 | 15336173 | Black | PA66 HS IM 14% GF | 15373421 | – | – |
| 38 | 15317380 | Black | PA66 HS IM | – | 15304903 | 15488824 |

### GT 280 Cavity Plug*

| Part # | Cavity Diameter | Material | Color |
|---|---|---|---|
| 12059168 | 5.2mm | Silicone | Dk. Red |
| 15305170 | 5.8mm | Silicone | White |

*Cavity plugs seal unused female and male cavities.

**NOTE:** Specifications in this catalog are for general reference only and are subject to change without notice. To verify product information, please contact a Delphi representative.

# Lever Lock

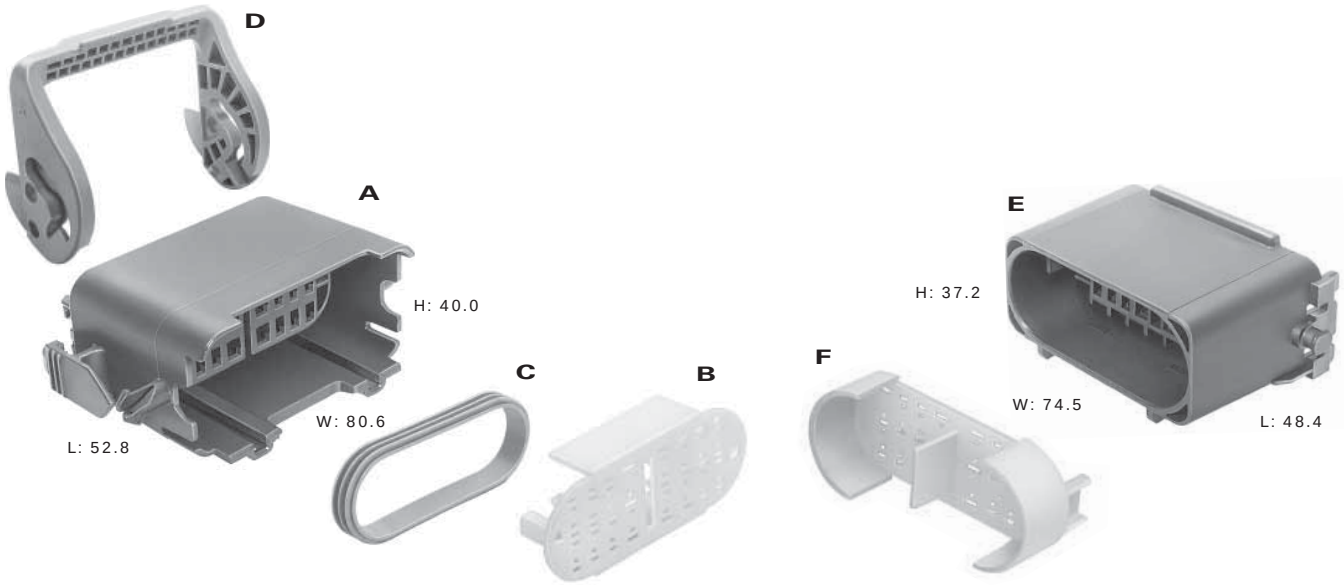


Total Mated Length: 72.0mm

### A. Part No: 15366099

| | |
|---|---|
| Description: | Connector 24F |
| Size: | 52.8L x 40.0H x 80.6W |
| Color: | Black |
| Material: | PA6 10% GF & 20% GB |
| Terminals: | See Page 1.38 |
| Seals/Plugs: | See Page 1.38, 1.39 |

### B. Part No: 15373422

| | |
|---|---|
| Description: | PLR |
| Color: | Natural |
| Material: | PA66 HS IM |

### C. Part No: 15336177

| | |
|---|---|
| Description: | Connector Seal |
| Color: | Green |
| Material: | Silicone |

### D. Part No: 15369322

| | |
|---|---|
| Description: | Lever Lock |
| Color: | Md. Gray |
| Material: | PA66 HS IM |

### E. Part No: 15336173

| | |
|---|---|
| Description: | Connector 24M |
| Size: | 48.4L x 37.2H x 74.5W |
| Color: | Black |
| Material: | PA66 HS IM 14% GF |
| Terminals: | See Page 1.39 |
| Seals/Plugs: | See Page 1.38, 1.39 |

### F. Part No: 15373421

| | |
|---|---|
| Description: | PLR |
| Color: | Md. Gray |
| Material: | PA66 HS IM |

**KEY:**

- ◪ 150 SERIES
- ■ 280 SERIES

Mixed connectors feature a combination of different terminal cavities, as indicated by the key.

**System Note:**
**For 280 Series sealed cavities use 5.8mm cavity diameter terminals and seals from pages 1.38 and 1.39.**

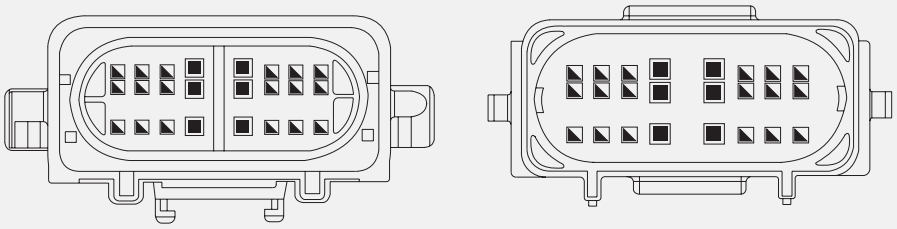

**NOTE:** Specifications in this catalog are for general reference only and are subject to change without notice. To verify product information, please contact a Delphi representative.

# Lever Lock

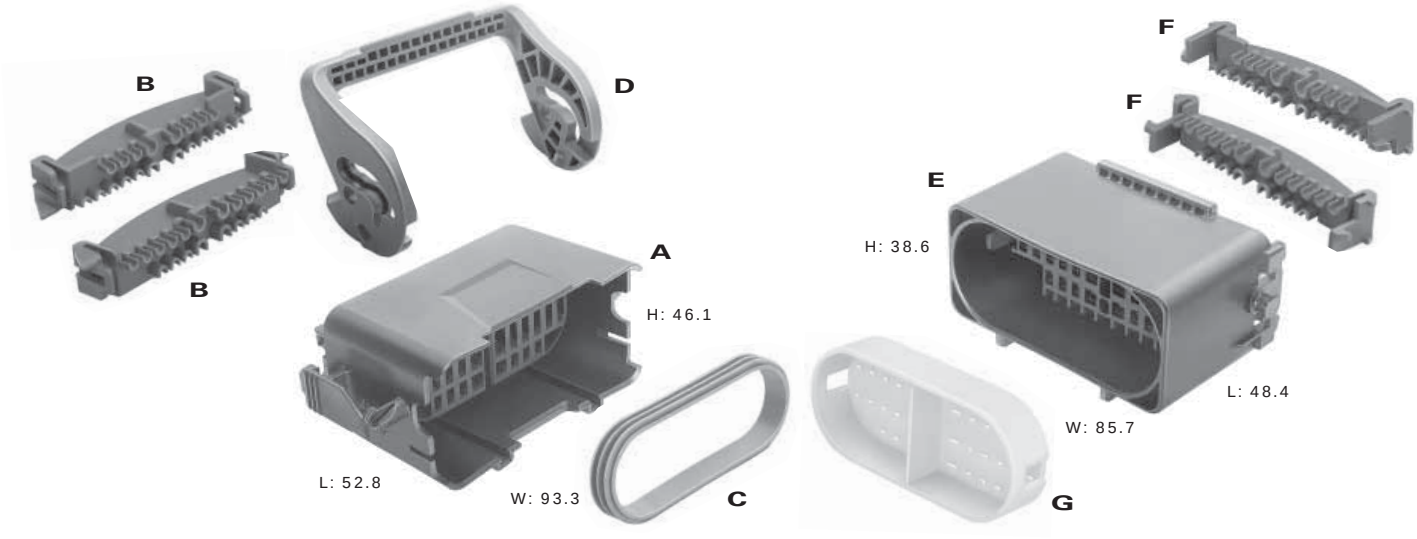


Total Mated Length: 91.1mm

### A. Part No: 15443822

| | |
|---|---|
| Description: | Connector 38F |
| Size: | 52.8L x 46.1H x 93.3W |
| Color: | Black |
| Material: | PA66 HS IM |
| Terminals: | See Page 1.38 |
| Seals/Plugs: | See Page 1.38, 1.39 |

### B. Part No: 15304904

| | |
|---|---|
| Description: | TPA |
| Number Req: | 2 |
| Color: | Lt. Gray |
| Material: | PBT |

### C. Part No: 15304905

| | |
|---|---|
| Description: | Connector Seal |
| Color: | Green |
| Material: | Silicone |

### D. Part No: 15336267

| | |
|---|---|
| Description: | Lever Lock |
| Color: | Dk. Gray |
| Material: | PA66 HS IM 14% GF |

### E. Part No: 15317380

| | |
|---|---|
| Description: | Connector 38M |
| Size: | 48.4L x 38.6H x 85.7W |
| Color: | Black |
| Material: | PA66 HS IM |
| Terminals: | See Page 1.39 |
| Seals/Plugs: | See Page 1.38, 1.39 |
| Clip: | 12084149 |

### F. Part No: 15304903

| | |
|---|---|
| Description: | TPA |
| Number Req: | 2 |
| Color: | Lt. Gray |
| Material: | PBT |

### G. Part No: 15488824

| | |
|---|---|
| Description: | Stabilizer |
| Color: | Natural |
| Material: | PA66 HS IM |

**KEY:**

- ◪ 150 SERIES
- ■ 280 SERIES
- ⊗ Blocked Cavity

Mixed connectors feature a combination of different terminal cavities, as indicated by the key.

**System Note:**
**For 280 Series sealed cavities use 5.2mm cavity diameter terminals and seals from pages 1.38 and 1.39.**

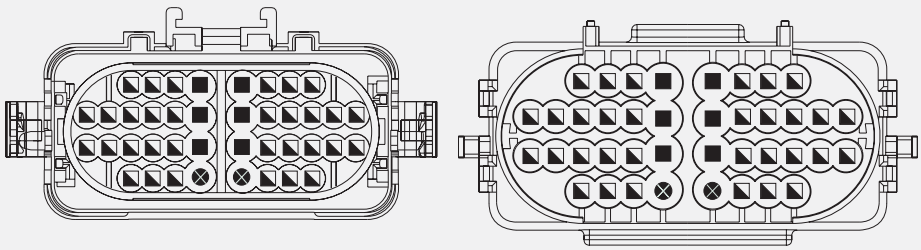

**NOTE:** Specifications in this catalog are for general reference only and are subject to change without notice. To verify product information, please contact a Delphi representative.

# Lever Lock
# Flexible Printed Circuit Application

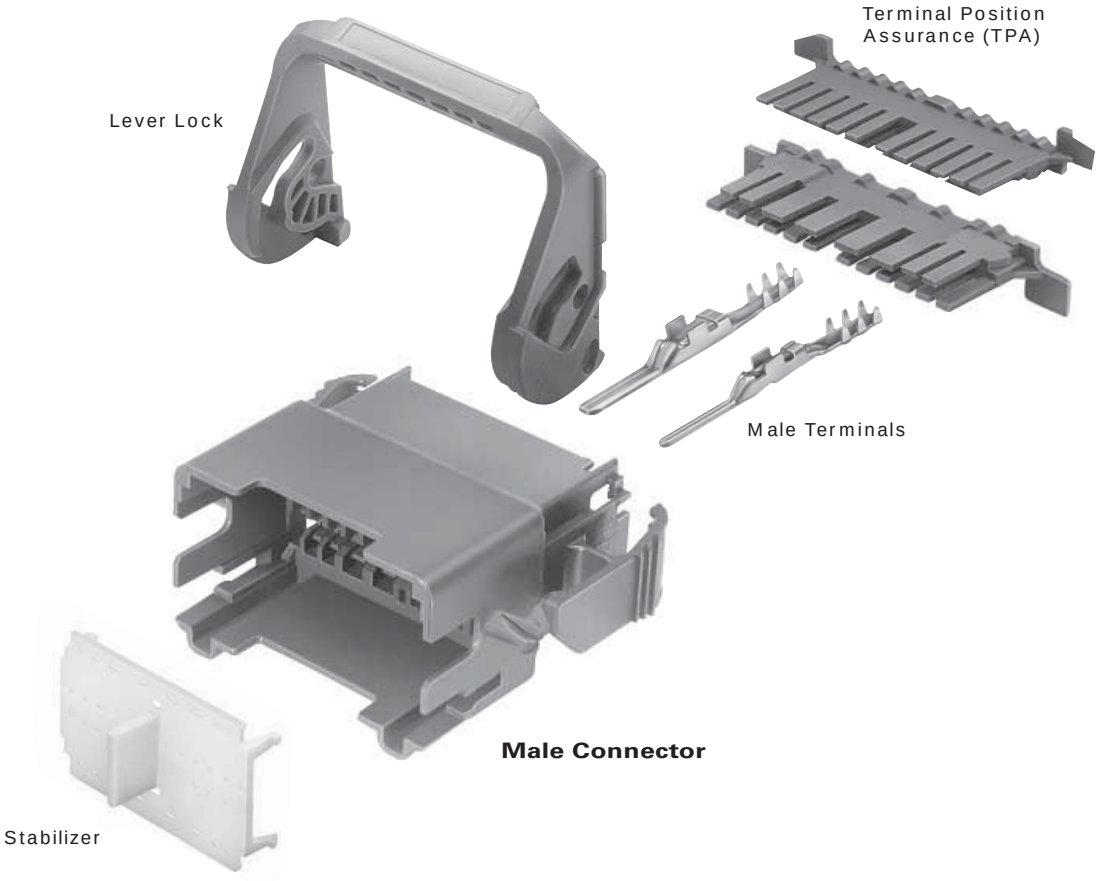


| GT Male Lever Lock Connectors Unsealed | | | | | | |
|---|---|---|---|---|---|---|
| **# Cavities** | **Connector** | **Color** | **Material** | **TPA** | **Stabilizer** | **Lever Lock** |
| 30 | 15317735 | Brown | PA66 HS IM | 15317828 | 15418984 | 15326799 |
| 40 | 15317694 | Brown | PA66 HS IM | 15355380 | 15326177 | 15336387 |

| GT 150 Male Terminals Unsealed | | |
|---|---|---|
| **Part #** | **Material** | **Plating** |
| 15317814 | Tin Brass | Tin |

| GT 280 Male Terminals Unsealed | | |
|---|---|---|
| **Part #** | **Material** | **Plating** |
| 15317815 | Tin Brass | Tin |

**SECTION NOTES:**

- Flex Circuit Systems mate to conventional female connection systems.

**NOTE:** Specifications in this catalog are for general reference only and are subject to change without notice. To verify product information, please contact a Delphi representative.

# Lever Lock
# Flexible Printed Circuit Application

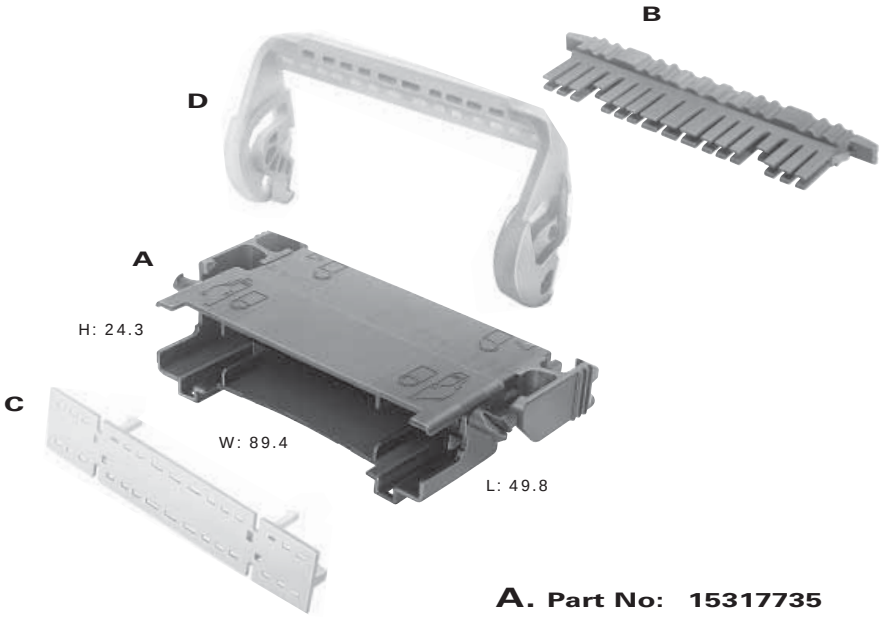


### A. Part No: 15317735

| | |
|---|---|
| Description: | Connector 30M |
| Size: | 49.8L x 24.3H x 89.4W |
| Color: | Brown |
| Material: | PA66 HS IM |
| Terminals: | See Page 1.42 |

### B. Part No: 15317828

| | |
|---|---|
| Description: | TPA |
| Color: | Green |
| Material: | PBT |

### C. Part No: 15418984

| | |
|---|---|
| Description: | Stabilizer |
| Color: | Natural |
| Material: | PA66 HS IM |

### D. Part No: 15326799

| | |
|---|---|
| Description: | Lever Lock |
| Color: | Natural |
| Material: | PA66 HS IM 14% GF |

**SYSTEM NOTES:**

- Conventional mating connector
  15326416 (Female) Brown
  15304913 (TPA) Blue
- Terminals See Page 1.32.

**KEY:**

- ◪ 150 SERIES
- ■ 280 SERIES

Mixed connectors feature a combination of different terminal cavities, as indicated by the key.

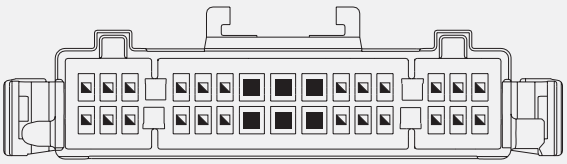

**NOTE:** Specifications in this catalog are for general reference only and are subject to change without notice. To verify product information, please contact a Delphi representative.

# Lever Lock
# Flexible Printed Circuit Application

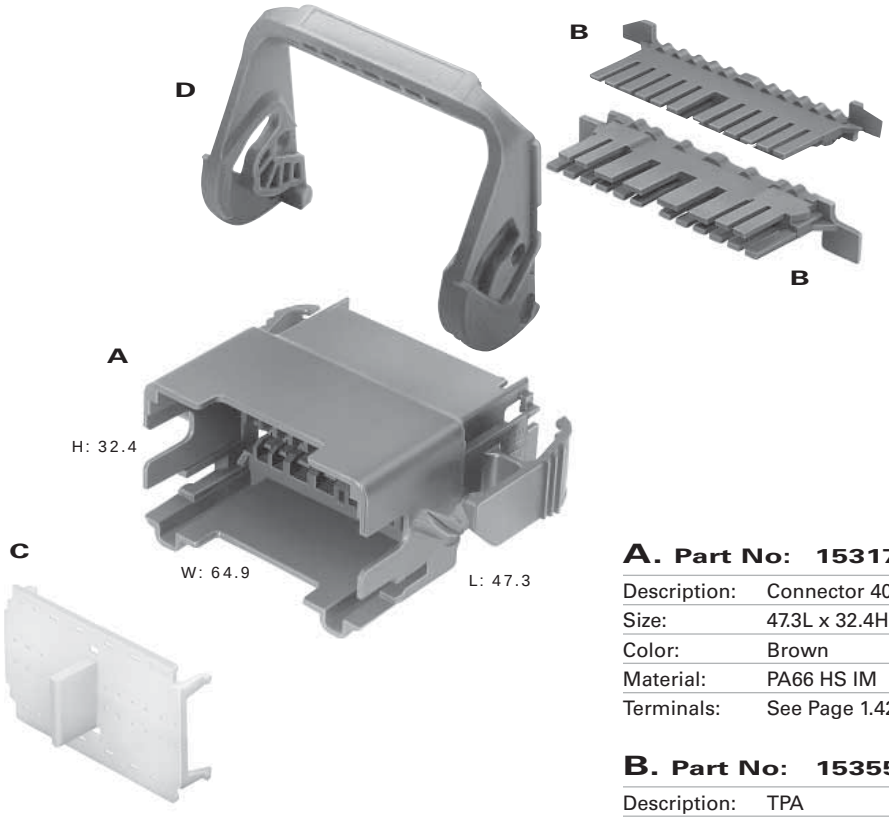


**A. Part No: 15317694**

| | |
|---|---|
| Description: | Connector 40M |
| Size: | 47.3L x 32.4H x 64.9W |
| Color: | Brown |
| Material: | PA66 HS IM |
| Terminals: | See Page 1.42 |

**B. Part No: 15355380**

| | |
|---|---|
| Description: | TPA |
| Number Req: | 2 |
| Color: | Green |
| Material: | PBT HS IM |

**C. Part No: 15326177**

| | |
|---|---|
| Description: | Stabilizer |
| Color: | Natural |
| Material: | PA66 HS IM |

**D. Part No: 15336387**

| | |
|---|---|
| Description: | Lever Lock |
| Color: | Natural |
| Material: | PA66 HS IM 14% GF |

**SYSTEM NOTES:**

- Conventional mating connector
  15305218 (Female) Brown
  15304342 (TPA) Blue
- Terminals See Page 1.32.

**KEY:**

- ◪ 150 SERIES
- ■ 280 SERIES

Mixed connectors feature a combination of different terminal cavities, as indicated by the key.

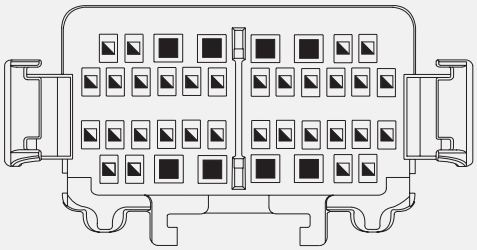

**NOTE:** Specifications in this catalog are for general reference only and are subject to change without notice. To verify product information, please contact a Delphi representative.

# 150

Available in device and in-line connections for vehicle applications, Metri-Pack 150 Series connectors can meet or exceed the requirements for most marine, appliance, and industrial control applications.

Ideally suited for limited space applications that do not require environmental protection, Metri-Pack 150 Series products are extremely versatile.

Available in device and in-line connections for underhood vehicle applications, Metri-Pack 150 Series sealed connectors can meet or exceed the requirements for most marine, appliance, and industrial control applications.

Utilizing triple-rib peripheral silicone rubber seals, Metri-Pack 150 Series sealed systems are ideally suited for critical, low-energy electronic applications that require protection from environmental hazards.

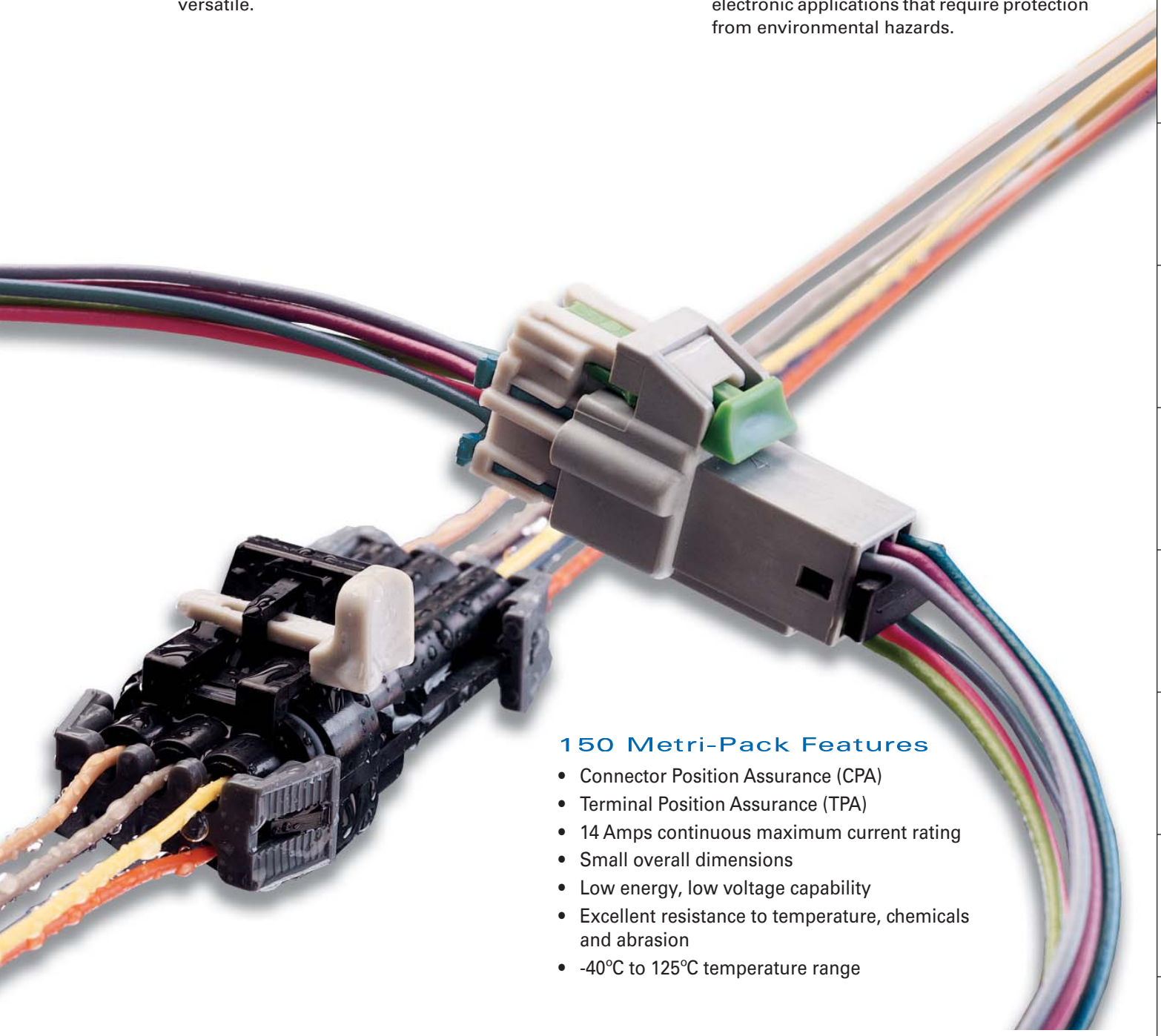

## 150 Metri-Pack Features

- Connector Position Assurance (CPA)
- Terminal Position Assurance (TPA)
- 14 Amps continuous maximum current rating
- Small overall dimensions
- Low energy, low voltage capability
- Excellent resistance to temperature, chemicals and abrasion
- -40°C to 125°C temperature range

# 150

## Cross Sectional View

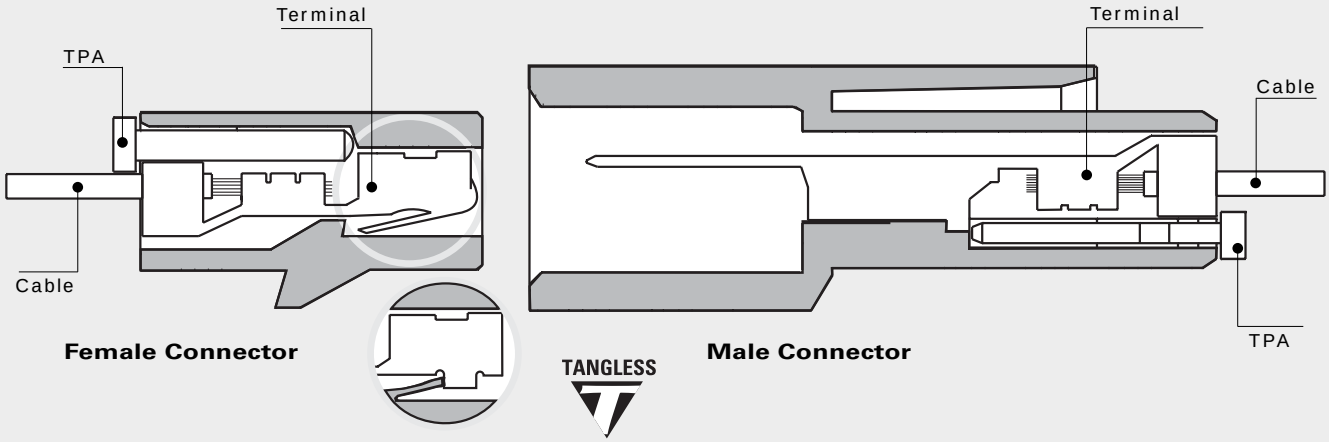

TPA
(Terminal Position
Assurance)

Female Terminal

CPA
(Connector
Position
Assurance)

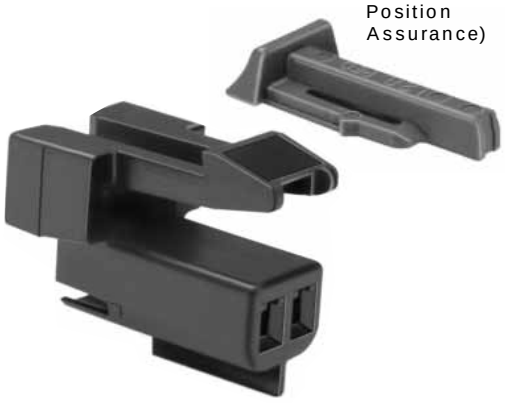

Female Connector

### 150 Female Terminals Unsealed

| Part # | Cable Range (mm²) | Material | Plating |
|---|---|---|---|
| 12047767 | 1.0-0.80 | Silicon Bronze | Tin |
| 12064971 | 0.50-0.35 | Silicon Bronze | Tin |

TANGLESS

### 150 Tangless Female Terminals Unsealed

| Part # | Cable Range (mm²) | Material | Plating |
|---|---|---|---|
| 12129484 | 1.0-0.80 | Silicon Bronze | Tin |
| 12129373 | 0.5-0.35 | Silicon Bronze | Tin |

### 150 Female Connectors Unsealed

| # Cavities | Connector | Color | Material | TPA |
|---|---|---|---|---|
| 1 | 12047682 | Black | PA66 HS IM | – |
| 2 | 12047662 | Black | PA66 HS IM | 15324070 |
| 2 | 12052832 | Black | PA66 HS IM | 15324070 |
| 3 | 12047781 | Black | PA66 HS IM | 12047783 |
| 3 | 12064758 | Black | PA66 HS IM | 12047783 |
| 4 | 12047785 | Black | PA66 HS IM | 15324070 |
| 4 | 12064760 | Black | PA66 HS IM | 15324070 |
| 4 | 12092162 | Black | PA66 HS IM | 12092164 |
| 6 | 12064762 | Lt. Gray | PA66 HS IM | 12064764 |
| 8 | 12047886 | Black | PA66 HS IM | 12045689 |
| 8 | 12064766 | Blue | PBT | 12064768 |
| 10 | 12064769 | Cream | PA66 HS IM | 12064771 |

**NOTE:** Specifications in this catalog are for general reference only and are subject to change without notice. To verify product information, please contact a Delphi representative.

# 150

## Unsealed System Application Information

CABLE RANGE (mm²): ..... 0.35-1.0

CURRENT RANGE (AMPS): ..... 0-14

TEMP RANGE °C: ..... -40 to 125

RESISTANCE: ..... <10mΩ@20mV

VOLTAGE DROP: .... <10.0 mV/amp

CENTERLINE SPACING (mm): ..... 3.5

BLADE WIDTH (mm): ..... 1.5

### 150 Series Terminals – Tin Plated

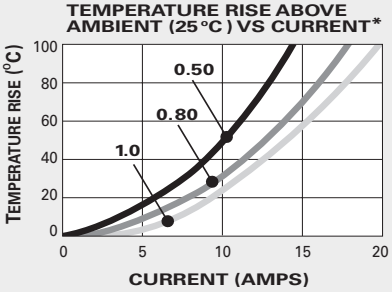


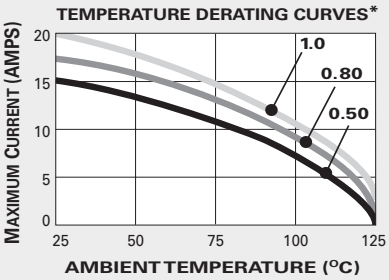


*The test data are based on single circuits in free space and were generated using a "Lumped Resistance" model. This model does not account for all of the variables that would be present in an actual application. For actual product performance, contact your regional support representative.

**Male Connector**

Male Terminal

TPA
(Terminal Position Assurance)

### 150 Male Connectors Unsealed

| # Cavities | Connector | Color | Material | TPA |
|---|---|---|---|---|
| 1 | 12047683 | Black | PA66 HS IM | – |
| 2 | 12047663 | Black | PA66 HS IM | 12047665 |
| 2 | 12052833 | Black | PA66 HS IM | 12047665 |
| 3 | 12047782 | Black | PA66 HS IM | 12047784 |
| 3 | 12064759 | Black | PBT | 12047784 |
| 4 | 12047786 | Black | PA66 HS IM | 12047787 |
| 4 | 12064761 | Black | PBT | 12047787 |
| 4 | 12092163 | Black | PA66 HS IM | 12092164 |
| 6 | 12064763 | Gray | PBT | 12064765 |
| 8 | 12045688 | Black | PA66 HS IM | 12045690 |
| 8 | 12064767 | Blue | PBT | 12045690 |
| 10 | 12064770 | Cream | PA66 HS IM | 12064772 |

### 150 Male Terminals Unsealed

| Part # | Cable Range (mm²) | Material | Plating |
|---|---|---|---|
| 12047581 | 0.80-0.50 | Tin Brass | Tin |
| 12059894 | 0.50-0.35 | Tin Brass | Tin |

**SECTION NOTES:**

- Due to rigid tolerances of connector cavities, it is critical to meet all crimp dimensions as specified.
- Female connections for device applications, see page 2.20.

**NOTE:** Specifications in this catalog are for general reference only and are subject to change without notice. To verify product information, please contact a Delphi representative.

# 150

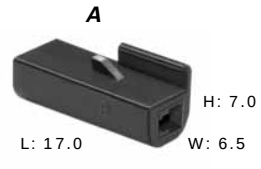

Total Mated Length: 38.1mm

### A. Part No: 12047682

| | |
|---|---|
| Description: | Connector 1F |
| Size: | 17.0L x 7.0H x 6.5W |
| Color: | Black |
| Material: | PA66 HS IM |
| Terminals: | See Page 2.2 |

### B. Part No: 12047683

| | |
|---|---|
| Description: | Connector 1M |
| Size: | 33.0L x 7.7H x 9.4W |
| Color: | Black |
| Material: | PA66 HS IM |
| Terminals: | See Page 2.3 |

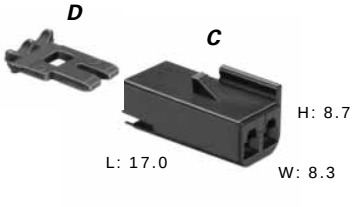


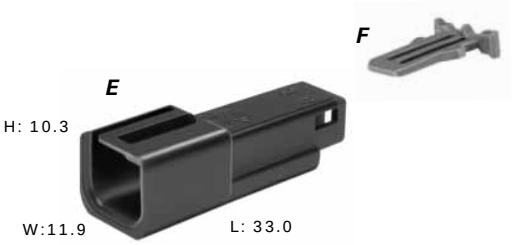


Total Mated Length: 41.0mm

### C. Part No: 12047662 (Black) 12059249 (Cream)

| | |
|---|---|
| Description: | Connector 2F |
| Size: | 17.0L x 8.7H x 8.3W |
| Material: | PA66 HS IM |
| Terminals: | See Page 2.2 |

### D. Part No: 15324070

| | |
|---|---|
| Description: | TPA |
| Color: | Lt. Gray |
| Material: | PA66 HS IM |

### E. Part No: 12047663 (Black) 12059250 (Cream)

| | |
|---|---|
| Description: | Connector 2M (Clip Slot) |
| Size: | 33.0L x 10.3H x 11.9W |
| Material: | PA66 HS IM |
| Terminals: | See Page 2.3 |

### F. Part No: 12047665

| | |
|---|---|
| Description: | TPA |
| Color: | Md. Gray |
| Material: | PA66 HS IM |

**NOTE:** Specifications in this catalog are for general reference only and are subject to change without notice. To verify product information, please contact a Delphi representative.

# 150

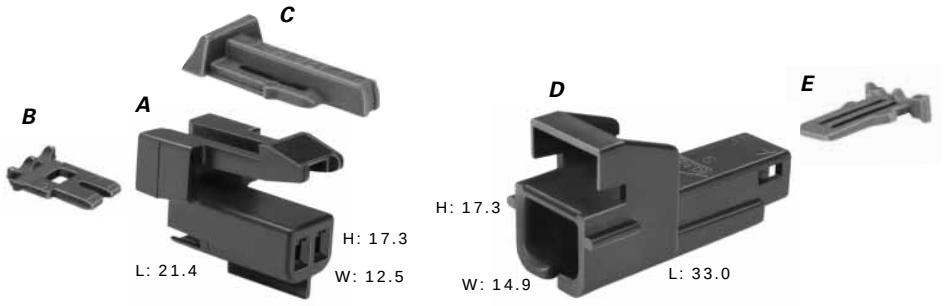


Total Mated Length: 43.1mm

### A. Part No: 12052832

| | |
|---|---|
| Description: | Connector 2F |
| Size: | 21.4L x 17.3H x 12.5W |
| Color: | Black |
| Material: | PA66 HS IM |
| Terminals: | See Page 2.2 |

### B. Part No: 15324070

| | |
|---|---|
| Description: | TPA |
| Color: | Lt. Gray |
| Material: | PA66 HS IM |

### C. Part No: 12052834

| | |
|---|---|
| Description: | CPA |
| Color: | Green |
| Material: | PP |

### D. Part No: 12052833

| | |
|---|---|
| Description: | Connector 2M (Clip Slot) |
| Size: | 33.0L x 17.3H x 14.9W |
| Color: | Black |
| Material: | PA66 HS IM |
| Terminals: | See Page 2.3 |

### E. Part No: 12047665

| | |
|---|---|
| Description: | TPA |
| Color: | Md. Gray |
| Material: | PA66 HS IM |

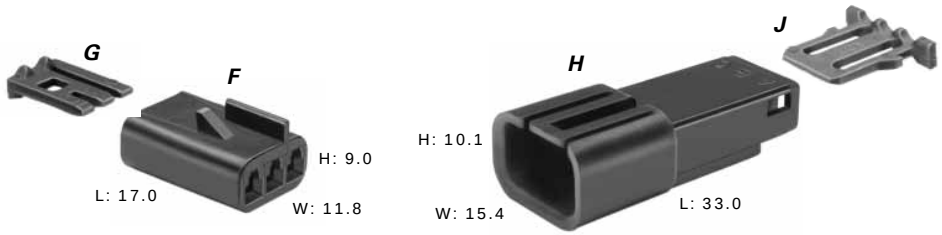


Total Mated Length: 41.3mm

### F. Part No: 12065422 (Cream) 12047781 (Black)

| | |
|---|---|
| Description: | Connector 3F |
| Size: | 17.0L x 9.0H x 11.8W |
| Material: | PA66 HS IM |
| Terminals: | See Page 2.2 |

### G. Part No: 12047783

| | |
|---|---|
| Description: | TPA |
| Color: | Md. Gray |
| Material: | PA66 HS IM |

### H. Part No: 12065423 (Cream) 12047782 (Black)

| | |
|---|---|
| Description: | Connector 3M (Clip Slot) |
| Size: | 33.0L x 10.1H x 15.4W |
| Material: | PA66 HS IM |
| Terminals: | See Page 2.3 |

### J. Part No: 12047784

| | |
|---|---|
| Description: | TPA |
| Color: | Gray |
| Material: | PBT |

**NOTE:** Specifications in this catalog are for general reference only and are subject to change without notice. To verify product information, please contact a Delphi representative.

# 150

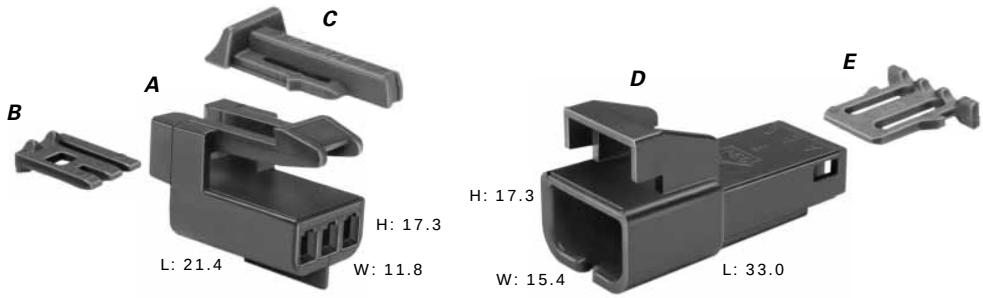


Total Mated Length: 47.1mm

### A. Part No: 12064758

| | |
|---|---|
| Description: | Connector 3F |
| Size: | 21.4L x 17.3H x 11.8W |
| Color: | Black |
| Material: | PA66 HS IM |
| Terminals: | See Page 2.2 |

### B. Part No: 12047783

| | |
|---|---|
| Description: | TPA |
| Color: | Md. Gray |
| Material: | PA66 HS IM |

### C. Part No: 12052834

| | |
|---|---|
| Description: | CPA |
| Color: | Green |
| Material: | PP |

### D. Part No: 12064759

| | |
|---|---|
| Description: | Connector 3M (Clip Slot) |
| Size: | 33.0L x 17.3H x 15.4W |
| Color: | Black |
| Material: | PBT |
| Terminals: | See Page 2.3 |

### E. Part No: 12047784

| | |
|---|---|
| Description: | TPA |
| Color: | Gray |
| Material: | PBT |

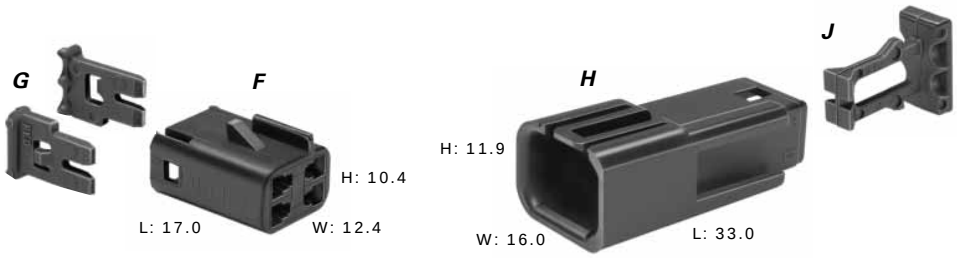


Total Mated Length: 42.2mm

### F. Part No: 12089248 (Cream) 12047785 (Black)

| | |
|---|---|
| Description: | Connector 4F |
| Size: | 17.0L x 10.4H x 12.4W |
| Material: | PA66 HS IM |
| Terminals: | See Page 2.2 |

### G. Part No: 15324070

| | |
|---|---|
| Description: | TPA |
| Number Req: | 2 |
| Color: | Lt. Gray |
| Material: | PA66 HS IM |

### H. Part No: 12089247 (Cream) 12047786 (Black)

| | |
|---|---|
| Description: | Connector 4M (Clip Slot) |
| Size: | 33.0L x 11.9H x 16.0W |
| Material: | PA66 HS IM |
| Terminals: | See Page 2.3 |

### J. Part no: 12047787

| | |
|---|---|
| Description: | TPA |
| Color: | Blue |
| Material: | PBT |

**NOTE:** Specifications in this catalog are for general reference only and are subject to change without notice. To verify product information, please contact a Delphi representative.

# 150

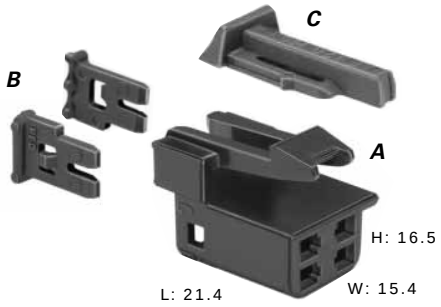


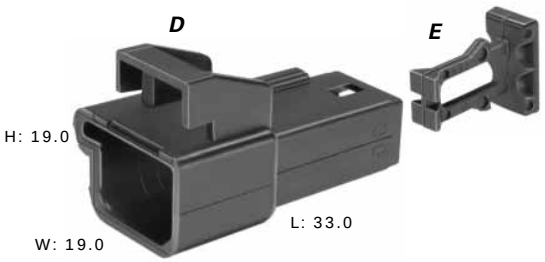


Total Mated Length: 47.9mm

### A. Part No: 12064760

| | |
|---|---|
| Description: | Connector 4F |
| Size: | 21.4L x 16.5H x 15.4W |
| Color: | Black |
| Material: | PA66 HS IM |
| Terminals: | See Page 2.2 |

### B. Part No: 15324070

| | |
|---|---|
| Description: | TPA |
| Number Req: | 2 |
| Color: | Lt. Gray |
| Material: | PA66 HS IM |

### C. Part No: 12052834

| | |
|---|---|
| Description: | CPA |
| Color: | Green |
| Material: | PP |

### D. Part No: 12064761

| | |
|---|---|
| Description: | Connector 4M (Clip Slot) |
| Size: | 33.0L x 19.0H x 19.0W |
| Color: | Black |
| Material: | PBT |
| Terminals: | See Page 2.3 |

### E. Part No: 12047787

| | |
|---|---|
| Description: | TPA |
| Color: | Blue |
| Material: | PBT |

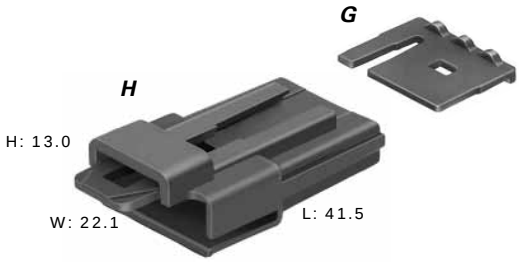


Total Mated Length: 43.3mm

### F. Part No: 12092162

| | |
|---|---|
| Description: | Connector 4F |
| Size: | 17.0L x 7.3H x 20.0W |
| Color: | Black |
| Material: | PA66 HS IM |
| Terminals: | See Page 2.2 |

### G. Part No: 12092164

| | |
|---|---|
| Description: | TPA |
| Number Req: | 2 |
| Color: | Blue |
| Material: | PA66 HS IM |

### H. Part No: 12092163

| | |
|---|---|
| Description: | Connector 4M (Clip Slot) |
| Size: | 41.5L x 13.0H x 22.1W |
| Color: | Black |
| Material: | PA66 HS IM |
| Terminals: | See Page 2.3 |

**NOTE:** Specifications in this catalog are for general reference only and are subject to change without notice. To verify product information, please contact a Delphi representative.

# 150

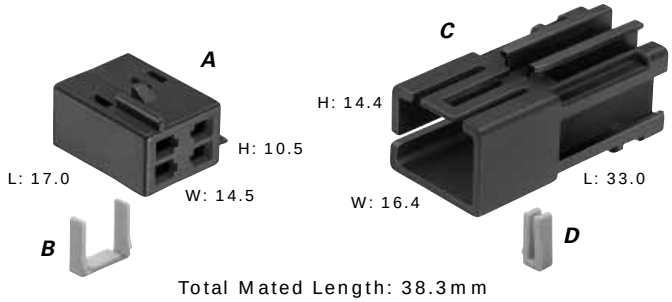


Total Mated Length: 38.3mm

## A. Part No: 12131283

| | |
|---|---|
| Description: | Connector 4F |
| Size: | 17.0L x 10.5H x 14.5W |
| Color: | Black |
| Material: | PA6 |
| Terminals: | See Page 2.2 |

## B. Part No: 12131361

| | |
|---|---|
| Description: | Secondary Lock |
| Color: | Yellow |
| Material: | PA66 25% GF |

## C. Part No: 12131285

| | |
|---|---|
| Description: | Connector 4M (Clip Slot) |
| Size: | 33.0L x 14.4H x 16.4W |
| Color: | Black |
| Material: | PA66 |
| Terminals: | See Page 2.3 |

## D. Part No: 12131372

| | |
|---|---|
| Description: | Secondary Lock |
| Color: | Yellow |
| Material: | PA66 25% GF |
| Note: | M Clip-on Connector also available |

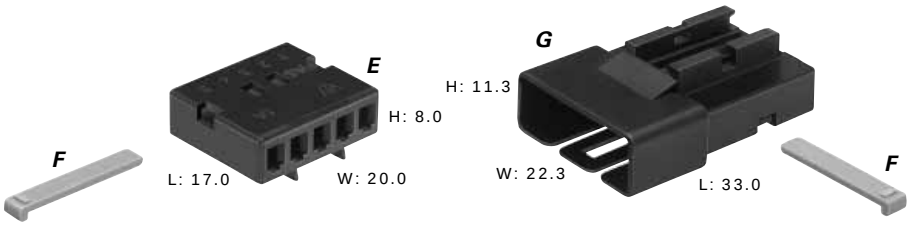


Total Mated Length: 38.3mm

## E. Part No: 12147054

| | |
|---|---|
| Description: | Connector 5F |
| Size: | 17.0L x 8.0H x 20.0W |
| Color: | Black |
| Material: | PA6 |
| Terminals: | See Page 2.2 |

## F. Part No: 12147055

| | |
|---|---|
| Description: | Secondary Lock |
| Number Req: | 2 |
| Color: | Yellow |
| Material: | PA66 25% GF |

## G. Part No: 12185636

| | |
|---|---|
| Description: | Connector 5M (Clip Slot) |
| Size: | 33.0L x 11.3H x 22.3W |
| Color: | Black |
| Material: | PA66 |
| Terminals: | See Page 2.3 |
| Note: | Clip Version available |

**NOTE:** Specifications in this catalog are for general reference only and are subject to change without notice. To verify product information, please contact a Delphi representative.

# 150

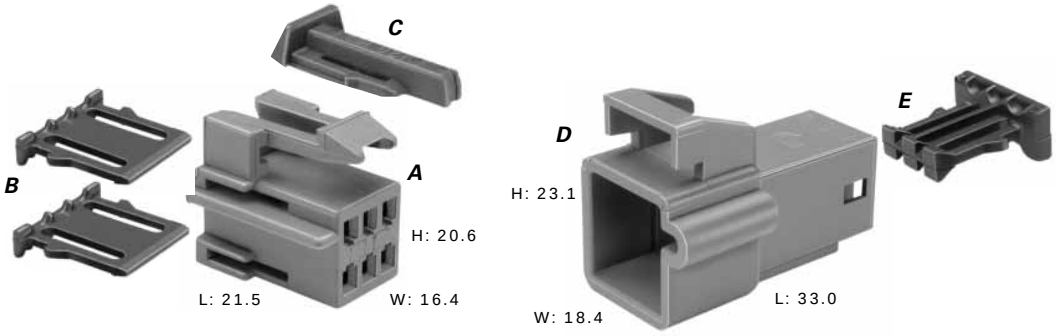


Total Mated Length: 50.1mm

### A. Part No: 12064762

| | |
|---|---|
| Description: | Connector 6F |
| Size: | 21.5L x 20.6H x 16.4W |
| Color: | Lt. Gray |
| Material: | PA66 HS IM |
| Terminals: | See Page 2.2 |

### B. Part No: 12064764

| | |
|---|---|
| Description: | TPA |
| Number Req: | 2 |
| Color: | Blue |
| Material: | PBT |

### C. Part No: 12052834

| | |
|---|---|
| Description: | CPA |
| Color: | Green |
| Material: | PP |

### D. Part No: 12064763

| | |
|---|---|
| Description: | Connector 6M (Clip Slot) |
| Size: | 33.0L x 23.1H x 18.4W |
| Color: | Gray |
| Material: | PBT |
| Terminals: | See Page 2.3 |

### E. Part No: 12064765

| | |
|---|---|
| Description: | TPA |
| Color: | Black |
| Material: | PBT |

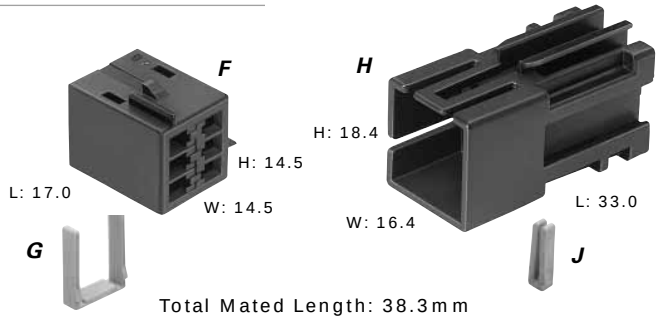


Total Mated Length: 38.3mm

### F. Part No: 15396848

| | |
|---|---|
| Description: | Connector 6F |
| Size: | 17.0L x 14.5H x 14.5W |
| Color: | Black |
| Material: | PA6 |
| Terminals: | See Page 2.2 |

### G. Part No: 12131358

| | |
|---|---|
| Description: | Secondary Lock |
| Color: | Yellow |
| Material: | PA66 25% GF |

### H. Part No: 15396849

| | |
|---|---|
| Description: | Connector 6M |
| Size: | 33.0L x 18.4H x 16.4W |
| Color: | Black |
| Material: | PA66 |
| Terminals: | See Page 2.3 |

### J. Part No: 12131370

| | |
|---|---|
| Description: | Secondary Lock |
| Color: | Yellow |
| Material: | PA66 25% GF |

**NOTE:** Specifications in this catalog are for general reference only and are subject to change without notice. To verify product information, please contact a Delphi representative.

# 150

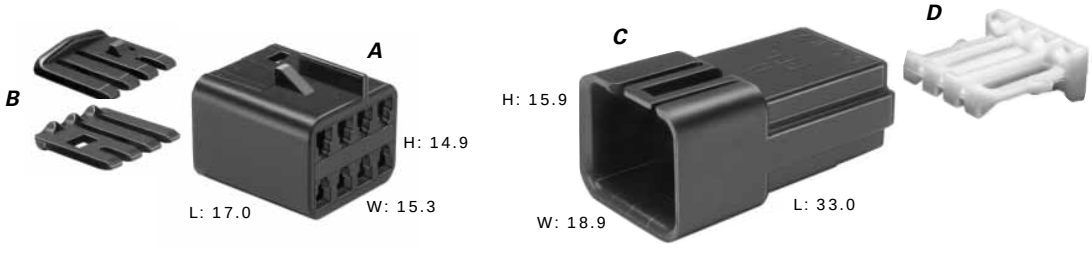


Total Mated Length: 41.2mm

### A. Part No: 12047886

| | |
|---|---|
| Description: | Connector 8F |
| Size: | 17.0L x 14.9H x 15.3W |
| Color: | Black |
| Material: | PA66 HS IM |
| Terminals: | See Page 2.2 |

### B. Part No: 12045689

| | |
|---|---|
| Description: | TPA |
| Number Req: | 2 |
| Color: | Md. Gray |
| Material: | PA66 HS IM |

### C. Part No: 12045688

| | |
|---|---|
| Description: | Connector 8M (Clip Slot) |
| Size: | 33.0L x 15.9H x 18.9W |
| Color: | Black |
| Material: | PA66 HS IM |
| Terminals: | See Page 2.3 |

### D. Part No: 12045690

| | |
|---|---|
| Description: | TPA |
| Color: | Natural |
| Material: | PBT |

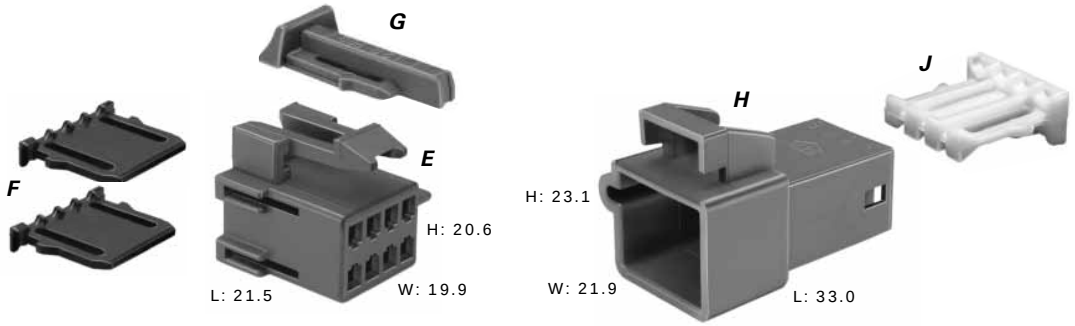


Total Mated Length: 48.3mm

### E. Part No: 12064766

| | |
|---|---|
| Description: | Connector 8F |
| Size: | 21.5L x 20.6H x 19.9W |
| Color: | Blue |
| Material: | PBT |
| Terminals: | See Page 2.2 |

### F. Part No: 12064768

| | |
|---|---|
| Description: | TPA |
| Number Req: | 2 |
| Color: | Black |
| Material: | PBT |

### G. Part No: 12052834

| | |
|---|---|
| Description: | CPA |
| Color: | Green |
| Material: | PP |

### H. Part No: 12064767

| | |
|---|---|
| Description: | Connector 8M (Clip Slot) |
| Size: | 33.0L x 23.1H x 21.9W |
| Color: | Blue |
| Material: | PBT |
| Terminals: | See Page 2.3 |

### J. Part No: 12045690

| | |
|---|---|
| Description: | TPA |
| Color: | Natural |
| Material: | PBT |

**NOTE:** Specifications in this catalog are for general reference only and are subject to change without notice. To verify product information, please contact a Delphi representative.

# 150

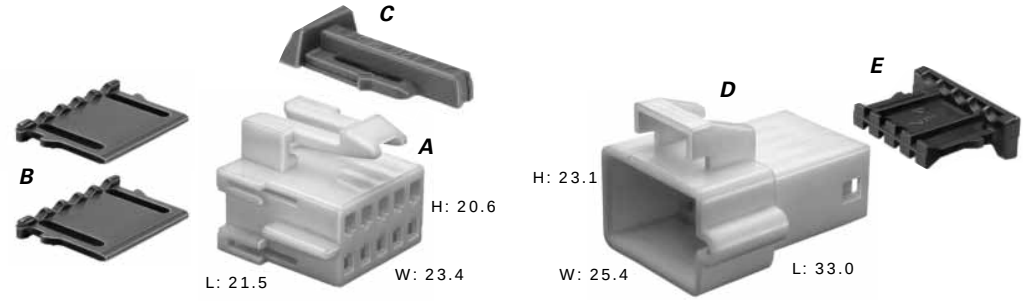


Total Mated Length: 48.3mm

## A. Part No: 12064769

| | |
|---|---|
| Description: | Connector 10F |
| Size: | 21.5L x 20.6H x 23.4W |
| Color: | Cream |
| Material: | PA66 HS IM |
| Terminals: | See Page 2.2 |

## B. Part No: 12064771

| | |
|---|---|
| Description: | TPA |
| Number Req: | 2 |
| Color: | Md. Gray |
| Material: | PA66 HS IM |

## C. Part No: 12052834

| | |
|---|---|
| Description: | CPA |
| Color: | Green |
| Material: | PP |

## D. Part No: 12064770

| | |
|---|---|
| Description: | Connector 10M (Clip Slot) |
| Size: | 33.0L x 23.1H x 25.4W |
| Color: | Cream |
| Material: | PA66 HS IM |
| Terminals: | See Page 2.3 |

## E. Part No: 12064772

| | |
|---|---|
| Description: | TPA |
| Color: | Black |
| Material: | PBT |

**NOTE:** Specifications in this catalog are for general reference only and are subject to change without notice. To verify product information, please contact a Delphi representative.

# 150

## Cross Sectional View

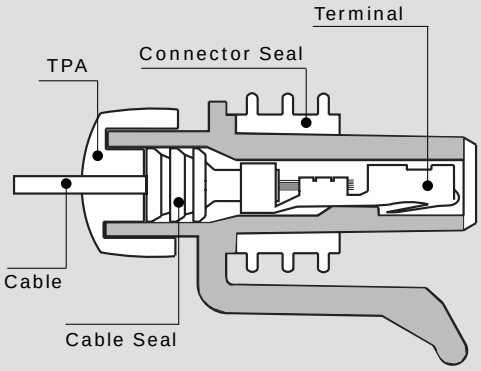


**Female Connector Assembly**

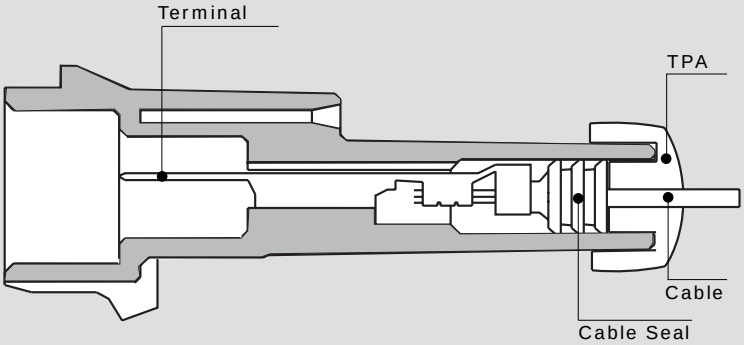


**Male Connector**

| 150 Female Terminals Sealed | | | |
|---|---|---|---|
| **Part #** | **Cable Range (mm²)** | **Material** | **Plating** |
| 12048074 | 1.0-0.80-0.50 | Silicon Bronze | Tin |
| 12084200 | 0.50-0.35 | Silicon Bronze | Tin |
| 12160223 | 1.0-0.80 | Beryllium Copper | Silver/Nickel |
| 12160222 | 0.50-0.35 | Beryllium Copper | Silver/Nickel |

| 150.2 Pull-to-Seat Female Terminals* | | | |
|---|---|---|---|
| **Part #** | **Cable Range (mm²)** | **Material** | **Plating** |
| 12124075 | 1.0-0.80 | Silicon Bronze | Tin |
| 12124076 | 0.50-0.35 | Silicon Bronze | Tin |
| 12161184 | 1.0-0.80 | Beryllium Copper | Tin |

*To be used with female connections, see page 2.22

| 150 Metri-Pack Cable Seals | | | | |
|---|---|---|---|---|
| **Reel Part #** | **Loose Part #** | **Cable Dia.** | **Material** | **Color** |
| 12052924 | 15324973 | 2.85-2.03 | Silicone | Dk. Red |
| 12089442 | 15324976 | 2.15-1.60 | Silicone | White |
| 12052925 | 15324974 | 1.70-1.29 | Silicone | Blue |
| 12124669 | 15324975 | 1.009-0.995 | Silicone | Tan |

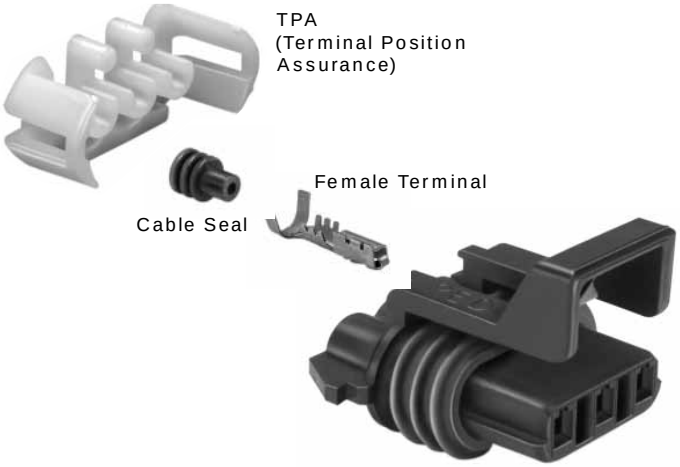


**Female Connector Assembly**

| 150 Female Connector Assemblies Sealed | | | | |
|---|---|---|---|---|
| **# Cavities** | **Conn. Asm.** | **Color** | **Material** | **TPA** |
| 2 | 12052641 | Black | PA66 HS IM | 12052634 |
| 3 | 12110293 | Black | PA66 HS IM | 12052845 |
| 4 | 12162144 | Black | PA66 HS IM | 12047948 |
| 5 | 12146045 | Cream | PA66 HS IM | 12092844 |
| 6 | 12052848 | Black | PA66 HS IM | 12052850 |
| 8 | 12047937 | Black | PA66 HS IM | 12066304 |
| 10 | 12065425 | Black | PA66 HS IM | 12177082 |

**NOTE:** Specifications in this catalog are for general reference only and are subject to change without notice. To verify product information, please contact a Delphi representative.

# 150

## Sealed System Application Information

CABLE RANGE (mm²): ..... 0.35-1.0

CURRENT RANGE (AMPS): ..... 0-14

TEMP RANGE °C: ..... -40 to 125

RESISTANCE: ..... <10mΩ@20mV

VOLTAGE DROP: .... <10.0 mV/amp

CENTERLINE SPACING (mm): ..... 6.0

BLADE WIDTH (mm): ..... 1.5

### 150 Series Terminals – Tin Plated

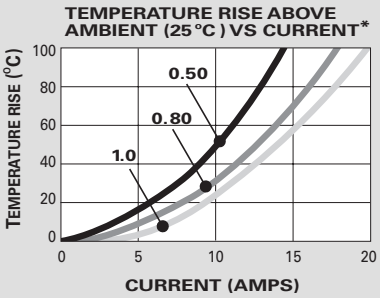


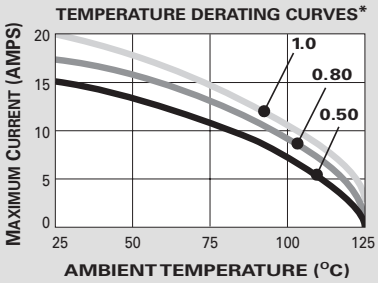


*The test data are based on single circuits in free space and were generated using a "Lumped Resistance" model. This model does not account for all of the variables that would be present in an actual application. For actual product performance, contact your regional support representative.

CPA
(Connector Position Assurance)

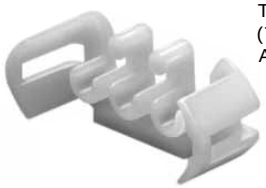

TPA
(Terminal Position Assurance)

Cable Seal

Male Terminal

**Male Connector**

### 150 Male Terminals Sealed

| Part # | Cable Range (mm²) | Material | Plating |
|---|---|---|---|
| 12045773 | 0.80-0.50 | Tin Brass | Tin |
| 12077628 | 0.50-0.35 | Tin Brass | Tin |

### 150 Male Connectors Sealed

| # Cavities | Connector | Color | Material | TPA |
|---|---|---|---|---|
| 2 | 12162000 | Black | PA66 HS IM | 12052634 |
| 3 | 12129615 | Black | PA66 HS IM | 12052845 |
| 4 | 12162102 | Black | PBT 30% GF | 12047948 |
| 5 | 12103974 | Natural | PBT 30% GF | 12092844 |
| 6 | 12124107 | Black | PA66 HS IM | 12052850 |
| 8 | 12047931 | Black | PBT 30% GF | 15324525 |
| 10 | 12045808 | Black | PBT 30% GF | 12177082 |

### 150 Metri-Pack Cavity Plug*

| Part # | Cavity Inside Diameter | Material | Color |
|---|---|---|---|
| 12059168 | 5.2mm | Silicone | Dk. Red |

*Cavity plugs seal unused female and male cavities

**SECTION NOTES:**

- Due to rigid tolerances of connector cavities, it is critical to meet all crimp dimensions as specified.
- Different color and connector indexing features are also available.
- Female connections for device applications, see page 2.21.

**NOTE:** Specifications in this catalog are for general reference only and are subject to change without notice. To verify product information, please contact a Delphi representative.

# 150

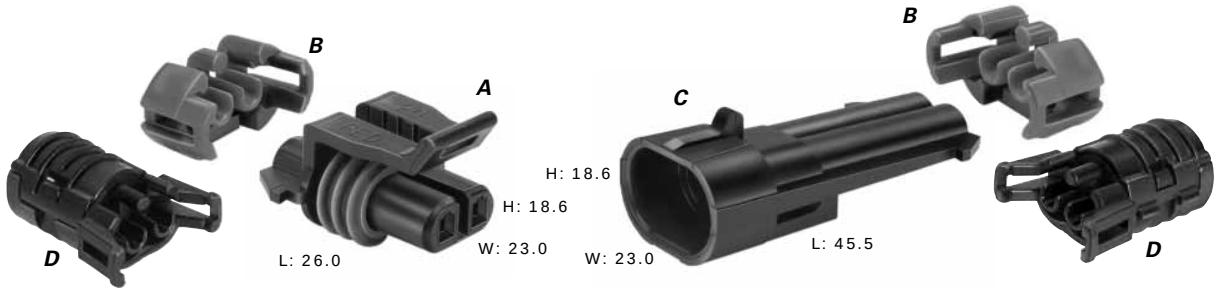


Total Mated Length: 58.5mm

### A. Part No: 12052641 (Black)
### 12052644 (Lt. Gray)

| | |
|---|---|
| Description: | Connector Assembly 2F |
| Size: | 26.0L x 18.6H x 23.0W |
| Material: | PA66 HS IM |
| Terminals: | See Page 2.12 |
| Seals/Plugs: | See Page 2.12, 2.13 |

### B. Part No: 12052634

| | |
|---|---|
| Description: | TPA |
| Number Req: | 2 |
| Color: | Blue |
| Material: | PA66 HS IM |

### C. Part No: 12162000 (Black)
### 12162343 (Lt. Gray)

| | |
|---|---|
| Description: | Connector 2M (Clip Slot–Self Locking) |
| Size: | 45.5L x 18.6H x 23.0W |
| Material: | PA66 HS IM |
| Terminals: | See Page 2.13 |
| Seals/Plugs: | See Page 2.12, 2.13 |

### D. Part No: 15327799 (Optional)

| | |
|---|---|
| Description: | Conduit TPA |
| Number Req: | 2 |
| Color: | Black |
| Material: | PA6 |

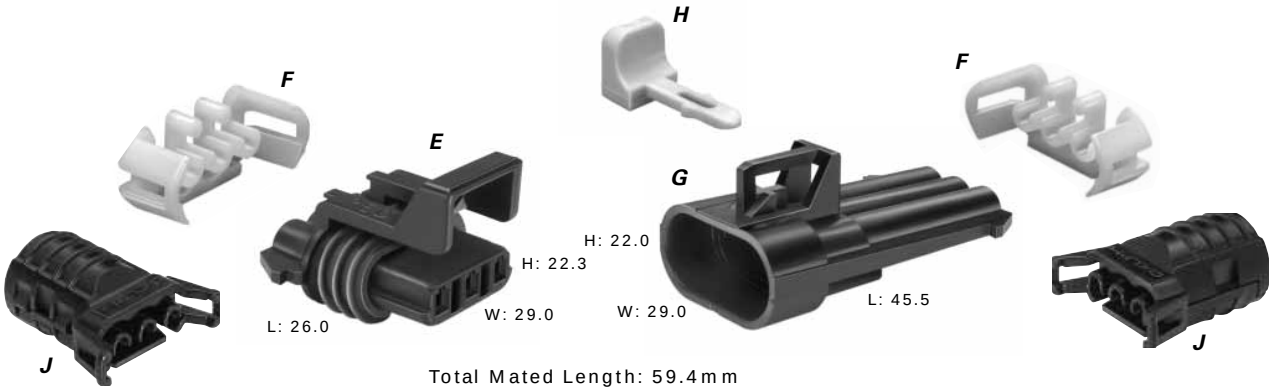


Total Mated Length: 59.4mm

### E. Part No: 12110293

| | |
|---|---|
| Description: | Connector Assembly 3F |
| Size: | 26.0L x 22.3H x 29.0W |
| Color: | Black |
| Material: | PA66 HS IM |
| Terminals: | See Page 2.12 |
| Seals/Plugs: | See Page 2.12, 2.13 |

### F. Part No: 12052845

| | |
|---|---|
| Description: | TPA |
| Number Req: | 2 |
| Color: | Natural |
| Material: | PA66 HS IM |

### G. Part No: 12129615

| | |
|---|---|
| Description: | Connector 3M (Clip Slot–Self Locking) |
| Size: | 45.5L x 22.0H x 29.0W |
| Color: | Black |
| Material: | PA66 HS IM |
| Terminals: | See Page 2.13 |
| Seals/Plugs: | See Page 2.12, 2.13 |

### H. Part No: 12020833

| | |
|---|---|
| Description: | CPA |
| Color: | Gray |
| Material: | PBT |

### J. Part No: 10740397 (Optional)

| | |
|---|---|
| Description: | Conduit TPA |
| Number Req: | 2 |
| Color: | Black |
| Material: | PA6 |

**NOTE:** Specifications in this catalog are for general reference only and are subject to change without notice. To verify product information, please contact a Delphi representative.

# 150

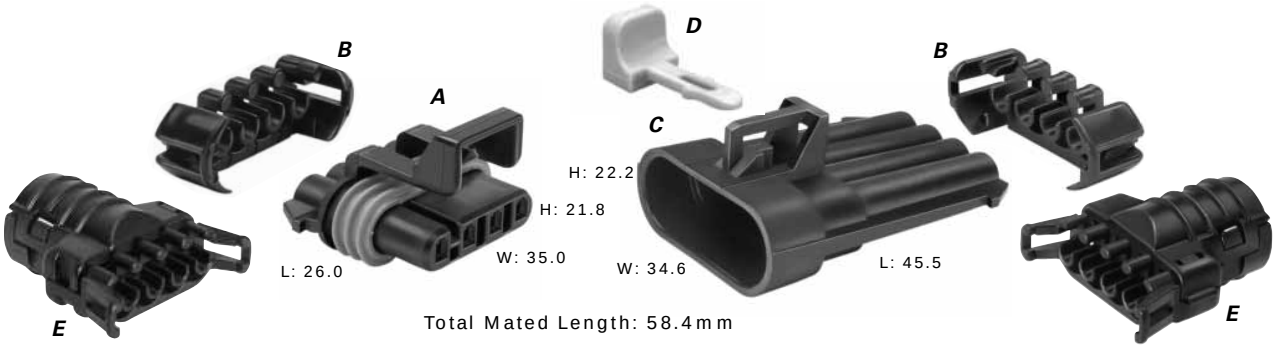


Total Mated Length: 58.4mm

### A. Part No: 12162144

| | |
|---|---|
| Description: | Connector Assembly 4F |
| Size: | 26.0L x 21.8H x 35.0W |
| Color: | Black |
| Material: | PA66 HS IM |
| Terminals: | See Page 2.12 |
| Seals/Plugs: | See Page 2.12, 2.13 |

### B. Part No: 12047948

| | |
|---|---|
| Description: | TPA |
| Number Req: | 2 |
| Color: | Black |
| Material: | PA66 HS IM |

### C. Part No: 12162102

| | |
|---|---|
| Description: | Connector 4M (Clip Slot–Self Locking) |
| Size: | 45.5L x 22.2H x 34.6W |
| Color: | Black |
| Material: | PBT 30% GF |
| Terminals: | See Page 2.13 |
| Seals/Plugs: | See Page 2.12, 2.13 |

### D. Part No: 12020833

| | |
|---|---|
| Description: | CPA |
| Color: | Gray |
| Material: | PBT |

### E. Part No: 10719337 (Optional)

| | |
|---|---|
| Description: | Conduit TPA |
| Number Req: | 2 |
| Color: | Black |
| Material: | PA6 |

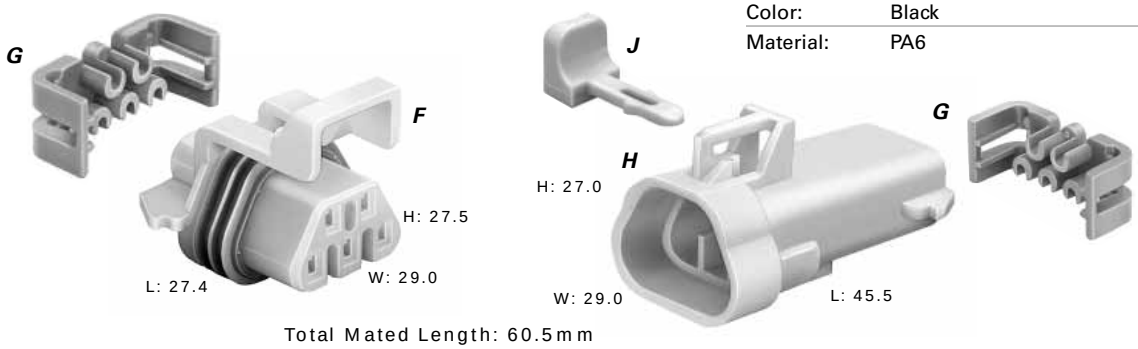


Total Mated Length: 60.5mm

### F. Part No: 12146045

| | |
|---|---|
| Description: | Connector Assembly 5F |
| Size: | 27.4L x 27.5H x 29.0W |
| Color: | Cream |
| Material: | PA66 HS IM |
| Terminals: | See Page 2.12 |
| Seals/Plugs: | See Page 2.12, 2.13 |

### G. Part No: 12092844

| | |
|---|---|
| Description: | TPA |
| Number Req: | 2 |
| Color: | Blue |
| Material: | PA66 HS IM |

### H. Part No: 12103974

| | |
|---|---|
| Description: | Connector 5M |
| Size: | 45.5L x 27.0H x 29.0W |
| Color: | Natural |
| Material: | PBT 30% GF |
| Terminals: | See Page 2.13 |
| Seals/Plugs: | See Page 2.12, 2.13 |

### J. Part No: 12020833

| | |
|---|---|
| Description: | CPA |
| Color: | Gray |
| Material: | PBT |

**NOTE:** Specifications in this catalog are for general reference only and are subject to change without notice. To verify product information, please contact a Delphi representative.

# 150

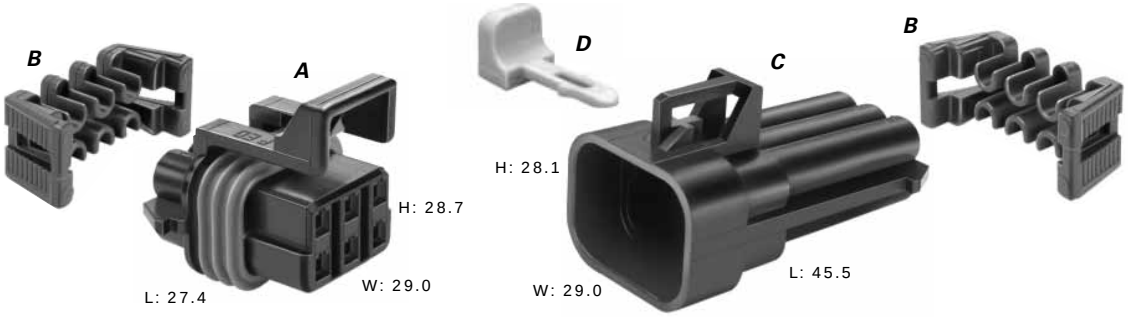


Total Mated Length: 60.5mm

### A. Part No: 12052848

| | |
|---|---|
| Description: | Connector Assembly 6F |
| Size: | 27.4L x 28.7H x 29.0W |
| Color: | Black |
| Material: | PA66 HS IM |
| Terminals: | See Page 2.12 |
| Seals/Plugs: | See Page 2.12, 2.13 |

### B. Part No: 12052850

| | |
|---|---|
| Description: | TPA |
| Number Req: | 2 |
| Color: | Md. Gray |
| Material: | PA66 HS IM |

### C. Part No: 12124107

| | |
|---|---|
| Description: | Connector 6M (Clip Slot–Self Locking) |
| Size: | 45.5L x 28.1H x 29.0W |
| Color: | Black |
| Material: | PA66 HS IM |
| Terminals: | See Page 2.13 |
| Seals/Plugs: | See Page 2.12, 2.13 |

### D. Part No: 12020833

| | |
|---|---|
| Description: | CPA |
| Color: | Gray |
| Material: | PBT |

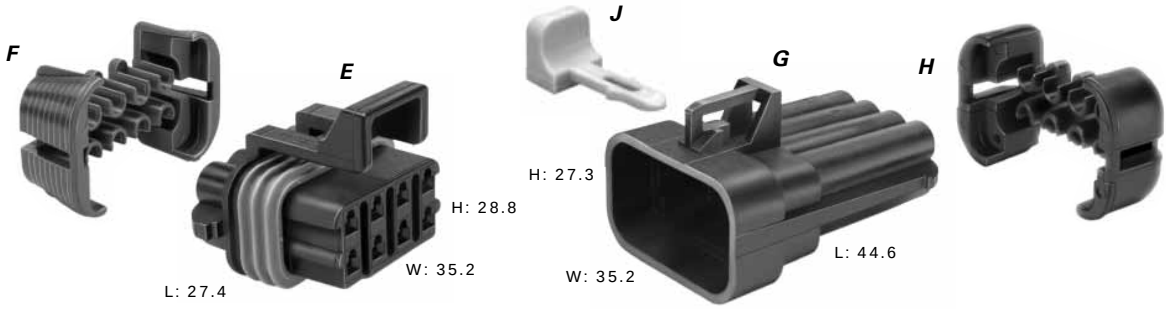


Total Mated Length: 60.4mm

### E. Part No: 12047937 (Black)

| | |
|---|---|
| Description: | Connector Assembly 8F |

### Part No: 12047938 (Lt. Gray)

| | |
|---|---|
| Description: | Connector Assembly 7F |

### Part No: 12052600 (Md. Gray)

| | |
|---|---|
| Description: | Connector Assembly 5F |
| Size: | 27.4L x 28.8H x 35.2W |
| Material: | PA66 HS IM |
| Terminals: | See Page 2.12 |
| Seals/Plugs: | See Page 2.12, 2.13 |

### F. Part No: 12066304

| | |
|---|---|
| Description: | TPA |
| Color: | Md. Gray |
| Material: | PA66 HS IM |

### G. Part No: 12047931 (Black)

| | |
|---|---|
| Description: | Connector 8M (Clip Slot) |

### Part No: 12047933 (Gray)

| | |
|---|---|
| Description: | Connector 7M (Clip Slot) |

### Part No: 12052480 (Dk. Gray)

| | |
|---|---|
| Description: | Connector 5M (Clip Slot) |
| Size: | 44.6L x 27.3H x 35.2W |
| Material: | PBT 30% GF |
| Terminals: | See Page 2.13 |
| Seals/Plugs: | See Page 2.12, 2.13 |

### H. Part No: 15324525

| | |
|---|---|
| Description: | TPA |
| Color: | Black |
| Material: | PA66 HS IM |

### J. Part No: 12020833

| | |
|---|---|
| Description: | CPA |
| Color: | Gray |
| Material: | PBT |

**NOTE:** Specifications in this catalog are for general reference only and are subject to change without notice. To verify product information, please contact a Delphi representative.

# 150

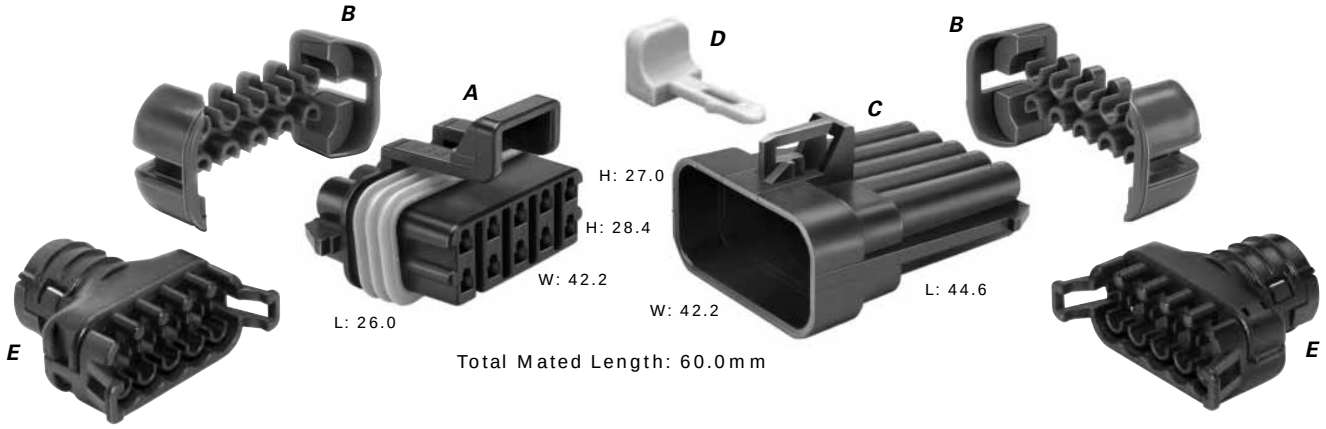


### A. Part No: 12065425 (Black) 12065426 (Md. Gray)

| | |
|---|---|
| Description: | Connector Assembly 10F |
| Size: | 26.0L x 28.4H x 42.2W |
| Material: | PA66 HS IM |
| Terminals: | See Page 2.12 |
| Seals/Plugs: | See Page 2.12, 2.13 |

### B. Part No: 12177082

| | |
|---|---|
| Description: | TPA |
| Number Req: | 2 |
| Color: | Md. Gray |
| Material: | PA66 HS IM |

### C. Part No: 12045808 (Black) 12052189 (Gray)

| | |
|---|---|
| Description: | Connector 10M (Clip Slot) |
| Size: | 44.6L x 27.0H x 42.2W |
| Material: | PBT 30% GF |
| Terminals: | See Page 2.13 |
| Seals/Plugs: | See Page 2.12, 2.13 |

### D. Part No: 12020833

| | |
|---|---|
| Description: | CPA |
| Color: | Gray |
| Material: | PBT |

### E. Part No: 10719339 (Optional)

| | |
|---|---|
| Description: | Conduit TPA |
| Number Req: | 2 |
| Color: | Black |
| Material: | PA6 |

**NOTE:** Specifications in this catalog are for general reference only and are subject to change without notice. To verify product information, please contact a Delphi representative.

# 150 Device Connections

## Metri-Pack OBD II — On-Board Diagnostic Connection System

The On-Board Diagnostic Connection System is designed to meet SAE J1962 specifications using ISO standard male terminals. The 16 Terminal Male Test Equipment Connector includes a nylon insulator with ISO standard copper alloy male terminals. The Female Vehicle Connector is designed for under dash application, and accepts 150 Series Metri-Pack tangless female terminals available in silicon bronze.

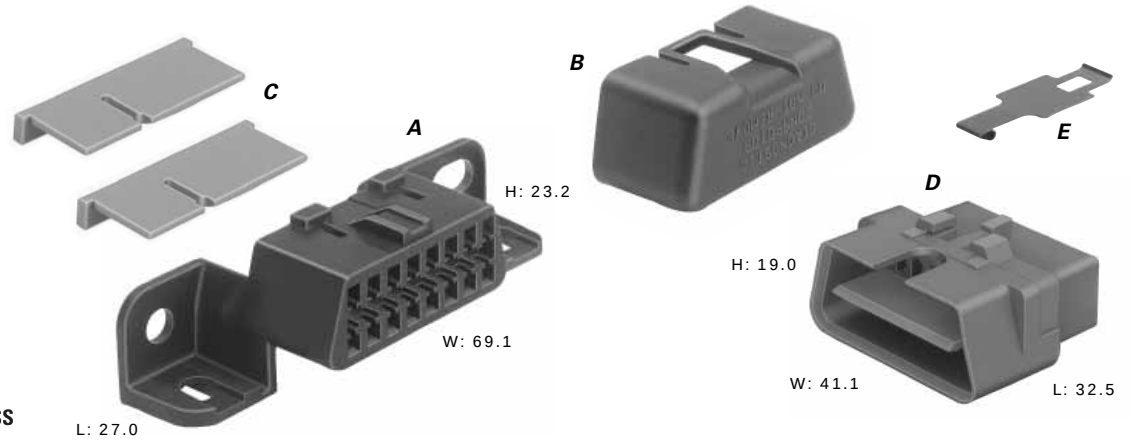


TANGLESS

### A. Part No: 12110250

| | |
|---|---|
| Description: | Connector 16F (Fastener Mounting) |
| Size: | 27.0L x 23.2H x 69.1W |

### Part No: 15317575

| | |
|---|---|
| Description: | Connector 16F (Snap Mounting) |
| Size: | 17.0L x 23.2H x 52.0W |
| Color: | Black |
| Material: | PA66 HS IM |
| Terminals: | See Page 2.2 |

### B. Part No: 12146933

| | |
|---|---|
| Description: | Cover |
| Color: | Black |
| Material: | PP IM |

### C. Part No: 12160437

| | |
|---|---|
| Description: | TPA |
| Number Req: | 2 |
| Color: | Blue |
| Material: | PA66 HS IM |

### D. Part No: 12110252

| | |
|---|---|
| Description: | Connector 16M |
| Size: | 32.5L x 19.0H x 41.1W |
| Color: | Red |
| Material: | PBT 30% GF |
| Terminals: | See Page 2.3 |
| Note: | For molding details refer to drawing 12110256 |

### E. Part No: 12110254

| | |
|---|---|
| Description: | Clip |
| Material: | Stainless Steel |

### F. Part No: 12185280

TANGLESS

| | |
|---|---|
| Description: | Connector 16F |
| Size: | 28.0L x 23.0H x 61.0W |
| Color: | White |
| Material: | PA66 |
| Terminals: | See Page 2.2 |

### G. Part No: 12185279

| | |
|---|---|
| Description: | Cover |
| Color: | Black |
| Material: | PA66 |

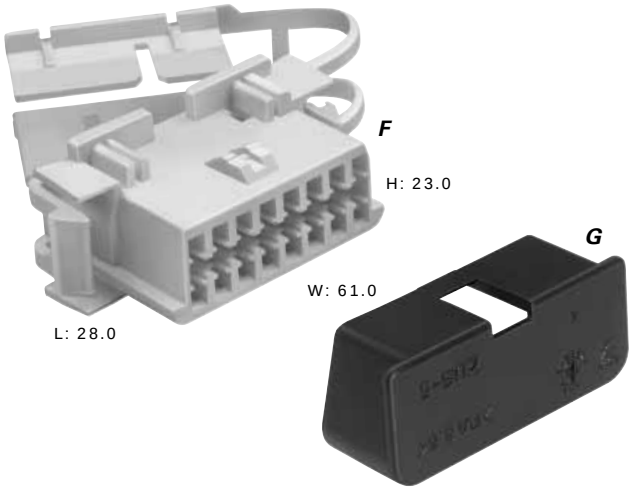


**NOTE:** Specifications in this catalog are for general reference only and are subject to change without notice. To verify product information, please contact a Delphi representative.

# 150 Device Connections



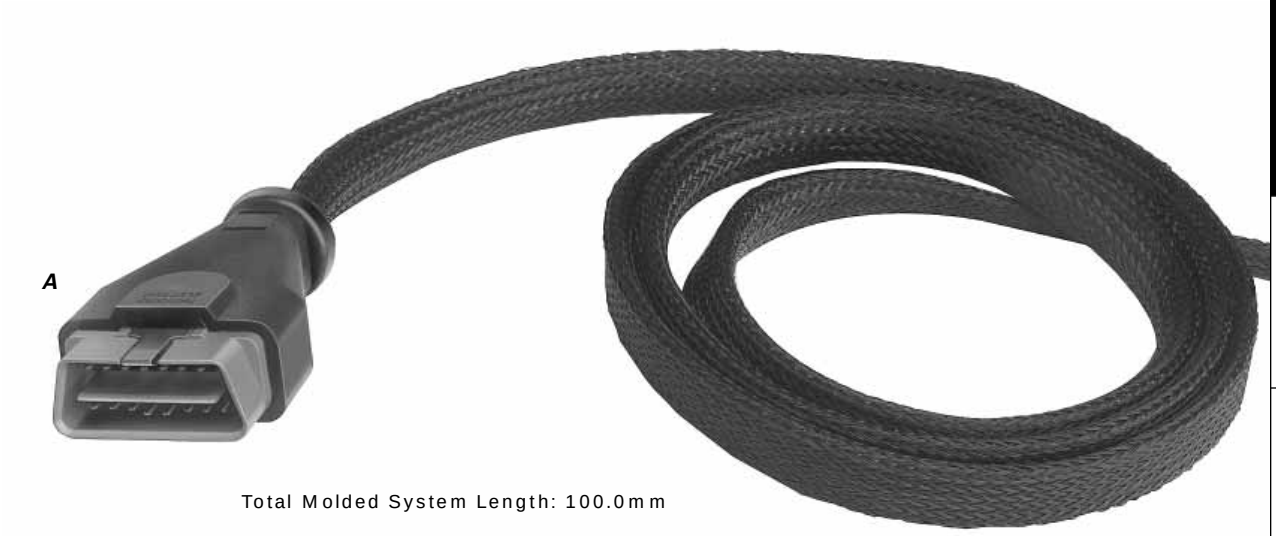


Total Molded System Length: 100.0mm

**A.**

| | |
|---|---|
| Description: | Connector Assembly 16M OBD II |
| **Part No:** | **12143692** |
| Length: | 3 Feet (915mm) |
| **Part No:** | **12143693** |
| Length: | 8 Feet (2440mm) |
| **Part No:** | **12143694** |
| Length: | 12 Feet (3660mm) |

**NOTE:** Specifications in this catalog are for general reference only and are subject to change without notice. To verify product information, please contact a Delphi representative.

# 150 Device Connections

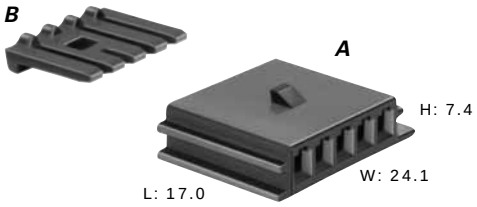


### A. Part No: 12059800

| | |
|---|---|
| Description: | Connector 5F |
| Size: | 17.0L x 7.4H x 24.1W |
| Color: | Black |
| Material: | PA66 HS IM |
| Terminals: | See Page 2.2 |
| Typical App: | Motor |

### B. Part No: 12059801

| | |
|---|---|
| Description: | TPA |
| Color: | Md. Gray |
| Material: | PA66 HS IM |

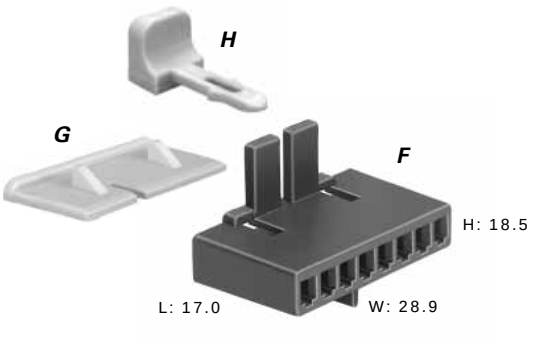


### F. Part No: 12064862

| | |
|---|---|
| Description: | Connector 8F |
| Size: | 17.0L x 18.5H x 28.9W |
| Color: | Black |
| Material: | PA66 HS IM |
| Terminals: | See Page 2.2 |
| Typical App: | Mirror Switch |

### G. Part No: 12064863

| | |
|---|---|
| Description: | TPA |
| Color: | Lt. Gray |
| Material: | PA66 HS IM |

### H. Part No: 12020833

| | |
|---|---|
| Description: | CPA |
| Color: | Gray |
| Material: | PBT |

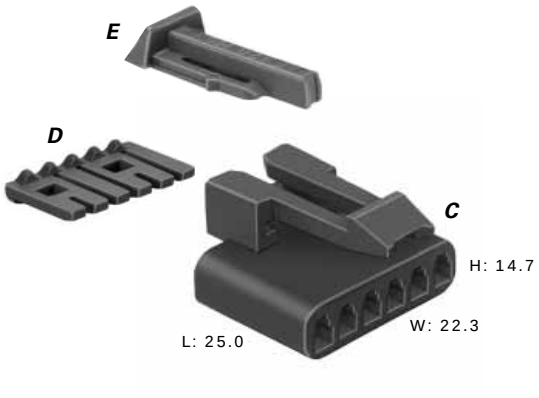


### C. Part No: 12064860

| | |
|---|---|
| Description: | Connector 6F |
| Size: | 25.0L x 14.7H x 22.3W |
| Color: | Black |
| Material: | PBT |
| Terminals: | See Page 2.2 |
| Typical App: | Switch |

### D. Part No: 12064861

| | |
|---|---|
| Description: | TPA |
| Color: | Md. Gray |
| Material: | PA66 HS IM |

### E. Part No: 12052834

| | |
|---|---|
| Description: | CPA |
| Color: | Green |
| Material: | PP |

**NOTE:** Specifications in this catalog are for general reference only and are subject to change without notice. To verify product information, please contact a Delphi representative.

# 150 Device Connections



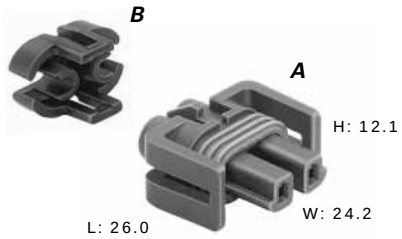


### A. Part No: 12162017

| | |
|---|---|
| Description: | Connector Assembly 2F |
| Size: | 26.0L x 12.1H x 24.2W |
| Color: | Md. Gray |
| Material: | PA66 HS IM |
| Terminals: | See Page 2.12 |
| Seals/Plugs: | See Page 2.12, 2.13 |
| Typical App: | Compressor |

### B. Part No: 12124824

| | |
|---|---|
| Description: | TPA |
| Color: | Black |
| Material: | PA66 HS IM |

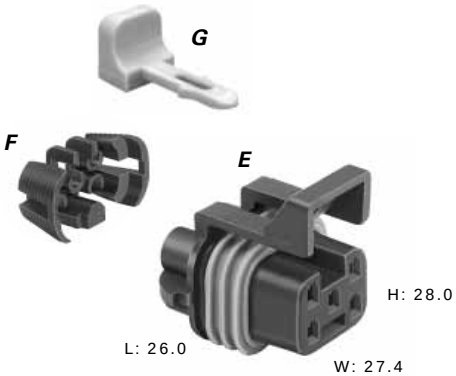


### E. Part No: 12077591

| | |
|---|---|
| Description: | Connector Assembly 5F |
| Size: | 26.0L x 28.0H x 27.4W |
| Color: | Black |
| Material: | PA66 HS IM |
| Terminals: | See Page 2.12 |
| Seals/Plugs: | See Page 2.12, 2.13 |
| Typical App: | EGR Valve |

### F. Part No: 12052898

| | |
|---|---|
| Description: | TPA |
| Color: | Black |
| Material: | PA66 HS IM |

### G: Part No: 12020833

| | |
|---|---|
| Description: | CPA |
| Color: | Gray |
| Material: | PBT |

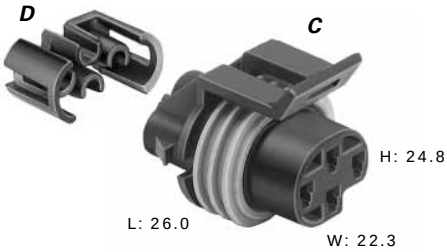


### C. Part No: 12065298

| | |
|---|---|
| Description: | Connector Assembly 4F |
| Size: | 26.0L x 24.8H x 22.3W |
| Color: | Black |
| Material: | PA66 HS IM |
| Terminals: | See Page 2.12 |
| Seals/Plugs: | See Page 2.12, 2.13 |
| Typical App: | Switch |

### D. Part No: 12066176

| | |
|---|---|
| Description: | TPA |
| Color: | Black |
| Material: | PA66 HS IM |

**NOTE:** Specifications in this catalog are for general reference only and are subject to change without notice. To verify product information, please contact a Delphi representative.

# 150.2 Pull-to-Seat

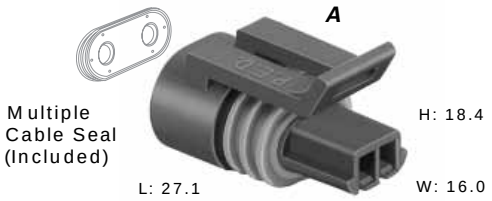


**A. Part No: 12162193 (Black/Green Seal)**

2.66 -2.00 Cable O.D.

**Part No: 12162197 (Md. Gray/Green Seal)**

2.66 -2.00 Cable O.D.

**Part No: 12162198 (Md. Gray/Tan Seal)**

2.15 -1.65 Cable O.D.

**Part No: 12162199 (Md. Gray/Orange Seal)**

1.85 -1.47 Cable O.D.

| | |
|---|---|
| Description: | Connector Assembly 2F |
| Size: | 27.1L x 18.4H x 16.0W |
| Material: | PA66 HS IM |
| Terminals: | See Page 2.12 |
| Typical App: | Temperature Sensors |

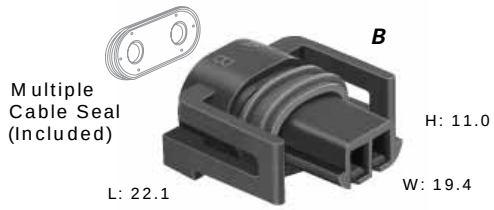


**B. Part No: 12162215 (Black/Brown Seal)**

2.66 -2.00 Cable O.D.

**Part No: 12162216 (Black/Lt. Gray Seal)**

2.66 -2.00 Cable O.D.

**Part No: 12162217 (Black/Gray Seal)**

2.15 -1.65 Cable O.D.

**Part No: 12162218 (Black/Yellow Seal)**

2.15 -1.65 Cable O.D.

| | |
|---|---|
| Description: | Connector Assembly 2F |
| Size: | 22.1L x 11.0H x 19.4W |
| Material: | PA66 HS IM |
| Terminals: | See Page 2.12 |
| Typical App: | Throttle Body Injector |

**C. Part No: 12162182 (Black/Green Seal)**

2.66 -2.00 Cable O.D.

**Part No: 12162280 (Md. Gray/Green Seal)**

2.66 -2.00 Cable O.D.

| | |
|---|---|
| Description: | Connector Assembly 3F |
| Size: | 27.1L x 17.4H x 19.5W |
| Material: | PA66 HS IM |
| Terminals: | See Page 2.12 |
| Typical App: | Crankshaft Sensor |

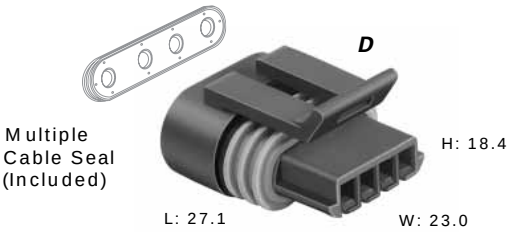


**D. Part No: 12162188 (Black/Green Seal)**

2.66 -2.00 Cable O.D.

**Part No: 12162191 (Black/Blue Seal)**

2.66 -2.00 Cable O.D.

| | |
|---|---|
| Description: | Connector Assembly 4F |
| Size: | 27.1L x 18.4H x 23.0W |
| Material: | PA66 HS IM |
| Terminals: | See Page 2.12 |
| Typical App: | Distributor Module |

**E. Part No: 12162210 (Black/Green Seal)**

2.66 -2.00 Cable O.D.

**Part No: 12162260 (Black/Tan Seal)**

2.15 -1.65 Cable O.D.

**Part No: 12162261 (Black/Lt. Gray Seal)**

1.85 -1.47 Cable O.D.

| | |
|---|---|
| Description: | Connector Assembly 6F |
| Size: | 27.1L x 17.7H x 30.0W |
| Material: | PA66 HS IM |
| Terminals: | See Page 2.12 |
| Typical App: | Various |

**NOTE:** GT series equivalents available for several Metri-Pack 150 Pull-to-Seat connector assemblies. Please refer to cross reference table on page 1.11 in the GT section.

**NOTE:** Specifications in this catalog are for general reference only and are subject to change without notice. To verify product information, please contact a Delphi representative.

# 280

Available in device and in-line connections for vehicle applications, Metri-Pack 280 Series connectors can meet or exceed the requirements for most marine, appliance, and industrial control applications.

Ideally suited for limited space applications that do not require environmental protection, Metri-Pack 280 Series products are extremely versatile.

Available in device and in-line connections for underhood vehicle applications, Metri-Pack 280 Series sealed connectors can meet or exceed the requirements for most marine, appliance, and industrial control applications.

Utilizing triple-rib peripheral silicone rubber seals, Metri-Pack 280 Series sealed systems are ideally suited for critical, low-energy electronic applications that require protection from environmental hazards.

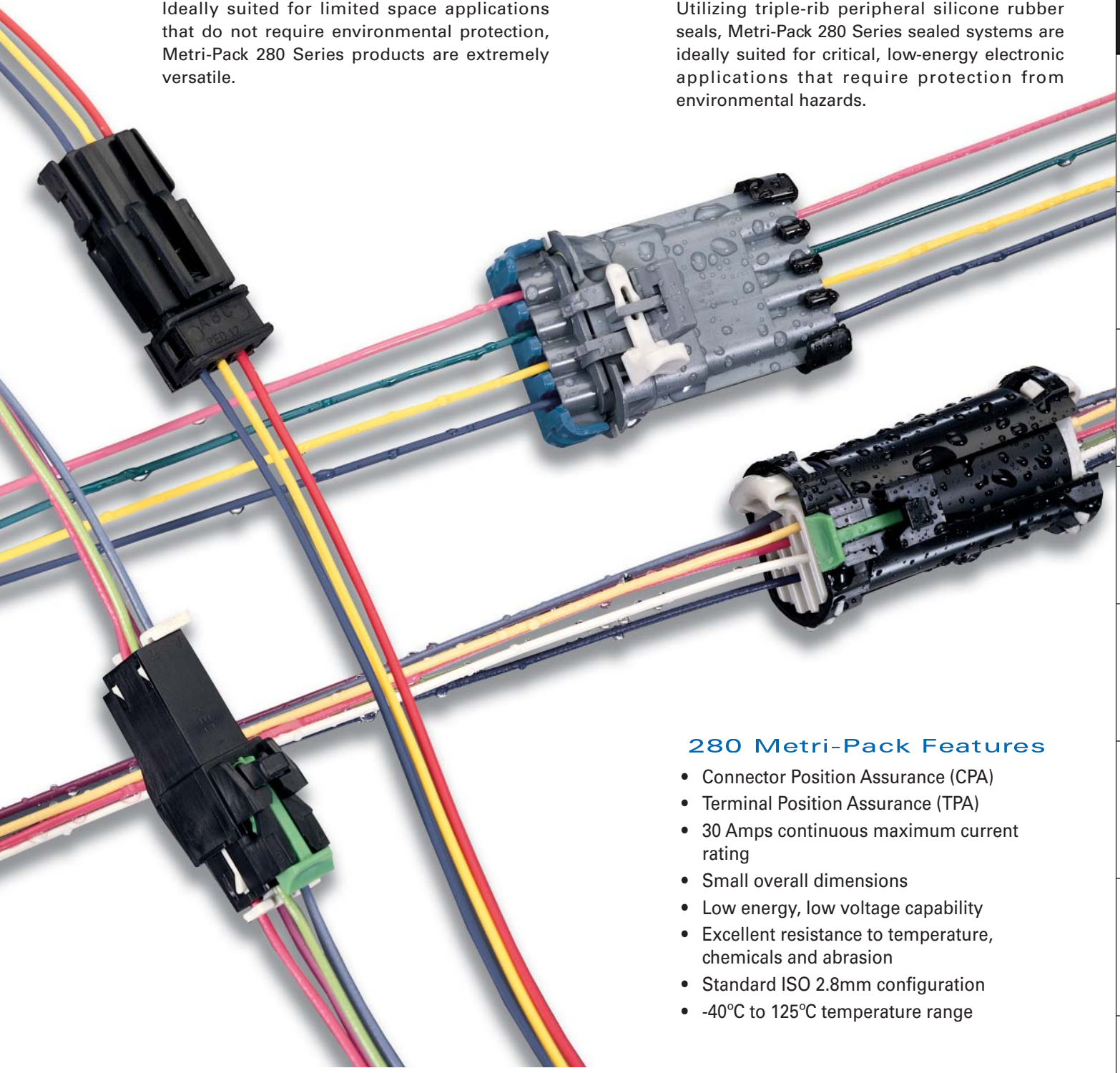

## 280 Metri-Pack Features

- Connector Position Assurance (CPA)
- Terminal Position Assurance (TPA)
- 30 Amps continuous maximum current rating
- Small overall dimensions
- Low energy, low voltage capability
- Excellent resistance to temperature, chemicals and abrasion
- Standard ISO 2.8mm configuration
- -40°C to 125°C temperature range

# 280

## Cross Sectional View

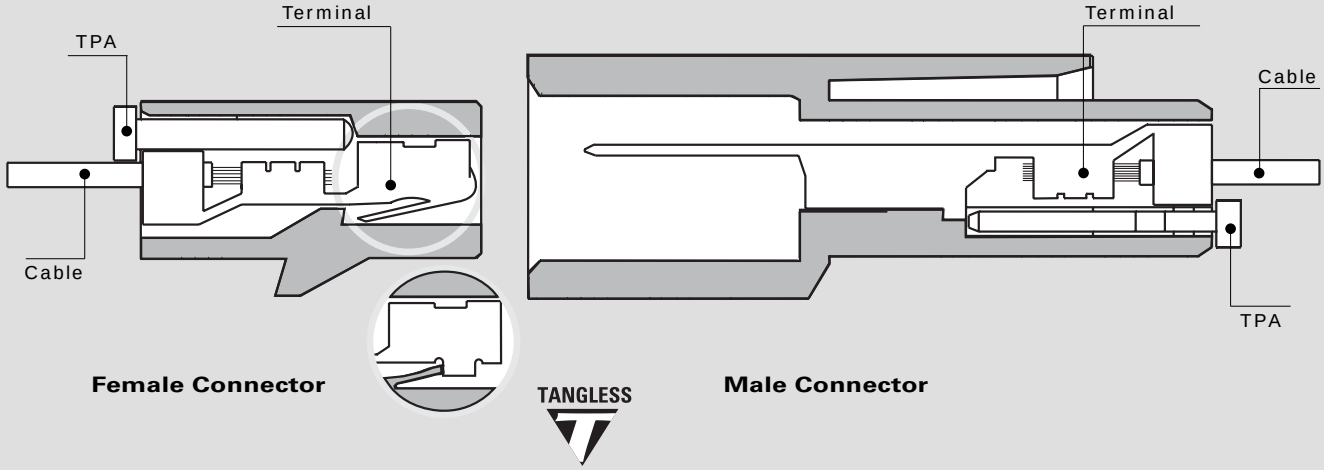


TANGLESS

### 280 Tangless Female Terminals Unsealed

| Part # | Cable Range (mm²) | Material | Plating |
|---|---|---|---|
| 12129425 | 5.0-3.0 | Tin Brass | Tin |
| 12129663 | 3.0 | Tin Brass | Tin |
| 12129424 | 2.0-1.0 | Tin Brass | Tin |
| 12110842* | 3.0-2.0 | Tin Brass | Tin |
| 12110844* | 1.0-0.80 | Tin Brass | Tin |
| 12110843* | 0.50-0.35 | Tin Brass | Tin |
| 12129061* | 2.0-0.35 | Tin Brass | Tin |

***Thin Stock**—Electrical current restrictions apply.

### 280 Female Terminals Unsealed

| Part # | Cable Range (mm²) | Material | Plating |
|---|---|---|---|
| 12015858 | 5.0-3.0 | Tin Brass | Tin |
| 12129494 | 3.0-2.0 | Tin Brass | Tin |
| 12066214 | 2.0-1.0 | Tin Brass | Tin |
| 12034046 | 0.80-0.50 | Tin Brass | Tin |
| 12052217 | 0.50-0.35 | Tin Brass | Tin |
| 12162597* | 3.0-2.0 | Tin Brass | Tin |
| 12162595* | 1.0-0.80 | Tin Brass | Tin |
| 12162596* | 0.50-0.35 | Tin Brass | Tin |

***Thin Stock**—Electrical current restrictions apply.

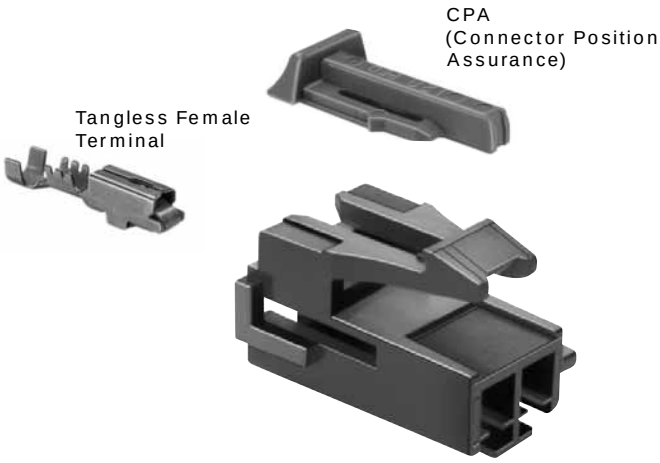


**Female Connector**

TANGLESS

### 280 Flexlock Female Connectors Unsealed

| # Cavities | Connector | Color | Material | TPA |
|---|---|---|---|---|
| 2 | 12129081 | Black | PA66 HS IM | 12129083 |
| 3 | 12129489 | Black | PA66 HS IM | 12129491 |
| 4 | 12129136 | Black | PA66 HS IM | 12129138 |

### 280 Female Connectors Unsealed

| # Cavities | Connector | Color | Material | TPA |
|---|---|---|---|---|
| 6 | 12064752 | Black | PA66 HS IM | 12064753 |
| 8 | 12064998 | Black | PA66 HS IM | 12064999 |

**NOTE:** Specifications in this catalog are for general reference only and are subject to change without notice. To verify product information, please contact a Delphi representative.

# 280

## Unsealed System Application Information

**CABLE RANGE (mm²): ..... 0.35-5.0**

**CURRENT RANGE (AMPS): ..... 0-30**

**TEMP RANGE °C: ..... -40 to 125**

**RESISTANCE: ..... <10mΩ@20mV**

**VOLTAGE DROP: ..... <3.0mV/amp**

**CENTERLINE SPACING (mm): ..... 5.0**

**BLADE WIDTH (mm): ..... 2.8**

### 280 Series Terminals – Tin Plated

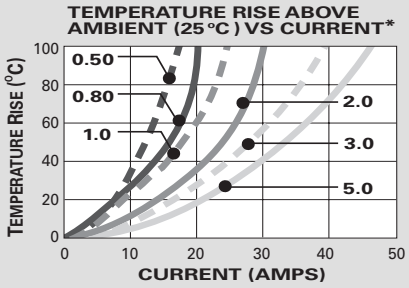


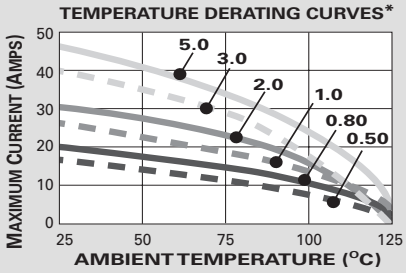


*The test data are based on single circuits in free space and were generated using a "Lumped Resistance" model. This model does not account for all of the variables that would be present in an actual application. For actual product performance, contact your regional support representative.

**Male Connector**

Male Terminal

TPA
(Terminal Position Assurance)

### 280 Male Terminals Unsealed

| Part # | Cable Range (mm²) | Material | Plating |
|---|---|---|---|
| 12084586 | 5.0-3.0 | Tin Brass | Tin |
| 12129498 | 3.0-2.0 | Tin Brass | Tin |
| 12020116 | 2.0-1.0 | Tin Brass | Tin |
| 12034047 | 0.80-0.50 | Tin Brass | Tin |
| 12066271 | 0.50-0.35 | Tin Brass | Tin |
| 12020782 | 0.35 (2 Req'd.) | Tin Brass | Tin |

### 280 Male Connectors Unsealed

| # Cavities | Connector | Color | Material | TPA |
|---|---|---|---|---|
| 2 | 12129155 | Black | PA66 HS IM | 12129157 |
| 3 | 12129490 | Black | PA66 HS IM | 12129492 |
| 4 | 12129135 | Black | PA66 HS IM | 12129137 |
| 6 | 12064754 | Black | PA6 | 12064755 |
| 8 | 12066195 | Black | PA66 HS IM | 12065141 |

**SECTION NOTES:**

- Due to rigid tolerances of connector cavities, it is critical to meet all crimp dimensions as specified.
- Different color and connector indexing features are also available.
- Female connections for device applications, see page 2.37.

**NOTE:** Specifications in this catalog are for general reference only and are subject to change without notice. To verify product information, please contact a Delphi representative.

# 280

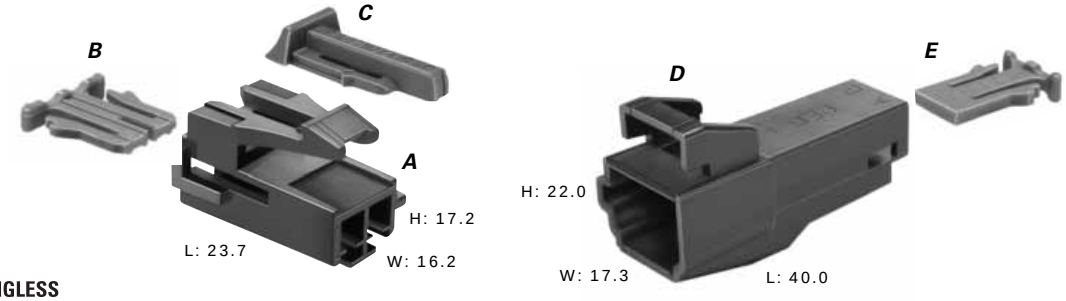


TANGLESS

Total Mated Length: 54.3mm

### A. Part No: 12129081 (Black)
### 12129082 (Md. Gray)

| | |
|---|---|
| Description: | Connector 2F |
| Size: | 23.7L x 17.2H x 16.2W |
| Material: | PA66 HS IM |
| Terminals: | See Page 2.24 |

### B. Part No: 12129083

| | |
|---|---|
| Description: | TPA |
| Color: | Lt. Gray |
| Material: | PA66 HS IM |

### C. Part No: 12052834

| | |
|---|---|
| Description: | CPA |
| Color: | Green |
| Material: | PP |

### D. Part No: 12129155 (Black)
### 12129156 (Md. Gray)

| | |
|---|---|
| Description: | Connector 2M (Clip Slot–Self Locking) |
| Size: | 40.0L x 22.0H x 17.3W |
| Material: | PA66 HS IM |
| Terminals: | See Page 2.25 |

### E. Part No: 12129157

| | |
|---|---|
| Description: | TPA |
| Color: | Lt. Gray |
| Material: | PA66 HS IM |

**NOTE:** Specifications in this catalog are for general reference only and are subject to change without notice. To verify product information, please contact a Delphi representative.

# 280

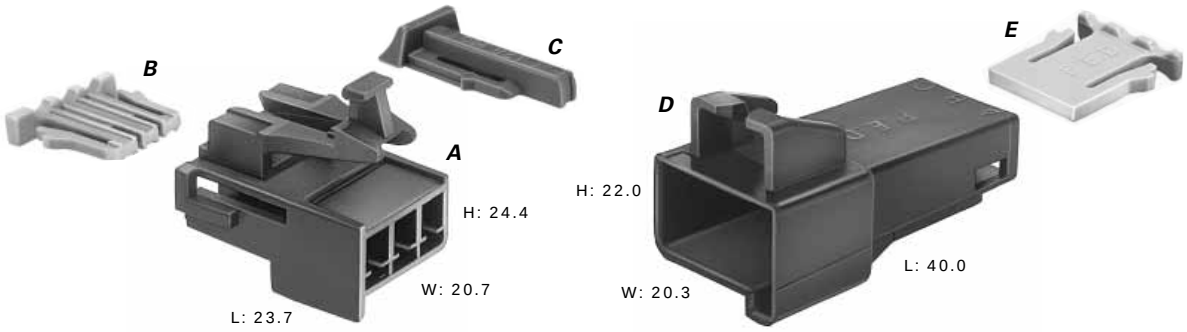


Total Mated Length: 54.3mm

TANGLESS

### A. Part No: 12129489

| | |
|---|---|
| Description: | Connector 3F |
| Size: | 23.7L x 24.4H x 20.7W |
| Color: | Black |
| Material: | PA66 HS IM |
| Terminals: | See Page 2.24 |

### B. Part No: 12129491

| | |
|---|---|
| Description: | TPA |
| Color: | Lt. Gray |
| Material: | PA66 HS IM |

### C. Part No: 12052834

| | |
|---|---|
| Description: | CPA |
| Color: | Green |
| Material: | PP |

### D. Part No: 12129490

| | |
|---|---|
| Description: | Connector 3M |
| Size: | 40.0L x 22.0H x 20.3W |
| Color: | Black |
| Material: | PA66 HS IM |
| Terminals: | See Page 2.25 |

### E. Part No: 12129492

| | |
|---|---|
| Description: | TPA |
| Color: | Lt. Gray |
| Material: | PA66 HS IM |

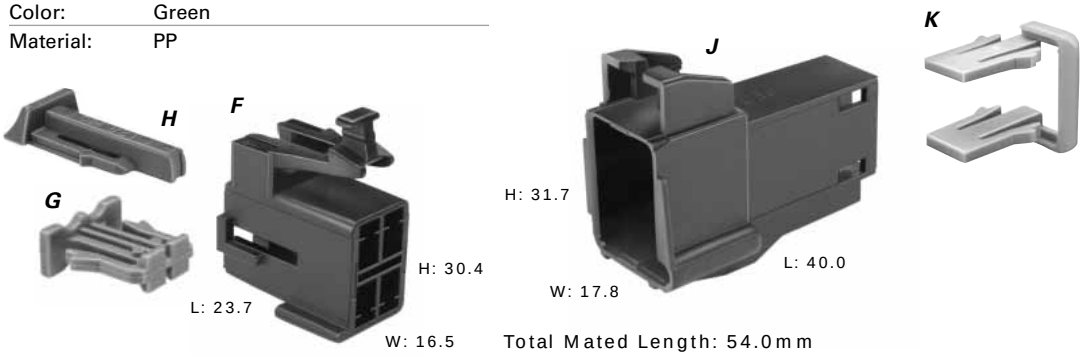


Total Mated Length: 54.0mm

TANGLESS

### F. Part No: 12129136 (Black) 15479020 (Cream)

| | |
|---|---|
| Description: | Connector 4F |
| Size: | 23.7L x 30.4H x 16.5W |
| Material: | PA66 HS IM |
| Terminals: | See Page 2.24 |

### G. Part No: 12129138

| | |
|---|---|
| Description: | TPA |
| Color: | Lt. Gray |
| Material: | PA66 HS IM |

### H. Part No: 12052834

| | |
|---|---|
| Description: | CPA |
| Color: | Green |
| Material: | PP |

### J. Part No: 12129135

| | |
|---|---|
| Description: | Connector 4M (Clip Slot–Self Locking) |
| Size: | 40.0L x 31.7H x 17.8W |
| Color: | Black |
| Material: | PA66 HS IM |
| Terminals: | See Page 2.25 |

### K. Part No: 12129137

| | |
|---|---|
| Description: | TPA |
| Color: | Lt. Gray |
| Material: | PA66 HS IM |

**NOTE:** Specifications in this catalog are for general reference only and are subject to change without notice. To verify product information, please contact a Delphi representative.

# 280

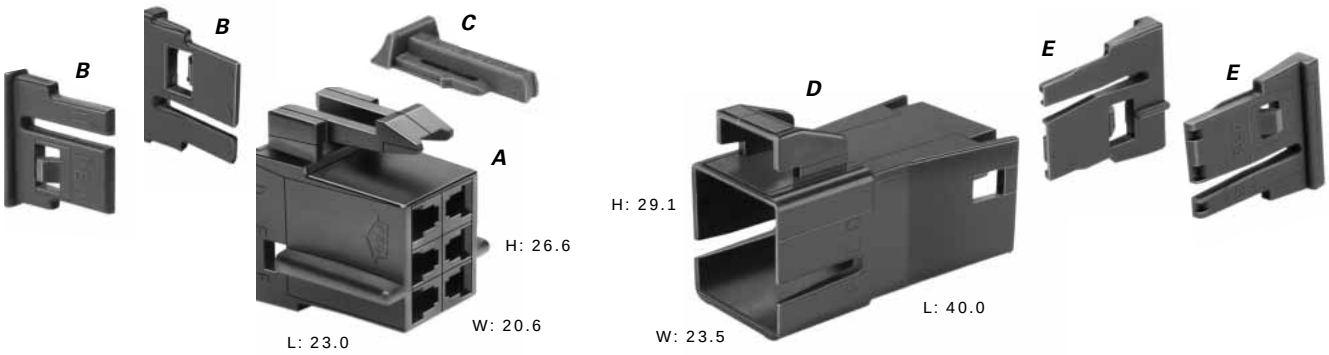


Total Mated Length: 57.0mm

### A. Part No: 12064752 (Black)
### 15479022 (Cream)

| | |
|---|---|
| Description: | Connector 6F |
| Size: | 23.0L x 26.6H x 20.6W |
| Material: | PA66 HS IM |
| Terminals: | See Page 2.24 |

### B. Part No: 12064753

| | |
|---|---|
| Description: | TPA |
| Number Req: | 2 |
| Color: | Md. Gray |
| Material: | PA66 HS IM |

### C. Part No: 12052834

| | |
|---|---|
| Description: | CPA |
| Color: | Green |
| Material: | PP |

### D. Part No: 12064754

| | |
|---|---|
| Description: | Connector 6M<br>(Clip Slot–Self Locking) |
| Size: | 40.0L x 29.1H x 23.5W |
| Color: | Black |
| Material: | PA6 |
| Terminals: | See Page 2.25 |

### E. Part No: 12064755

| | |
|---|---|
| Description: | TPA |
| Number Req: | 2 |
| Color: | Blue |
| Material: | PA66 HS IM |

**NOTE:** Specifications in this catalog are for general reference only and are subject to change without notice. To verify product information, please contact a Delphi representative.

# 280

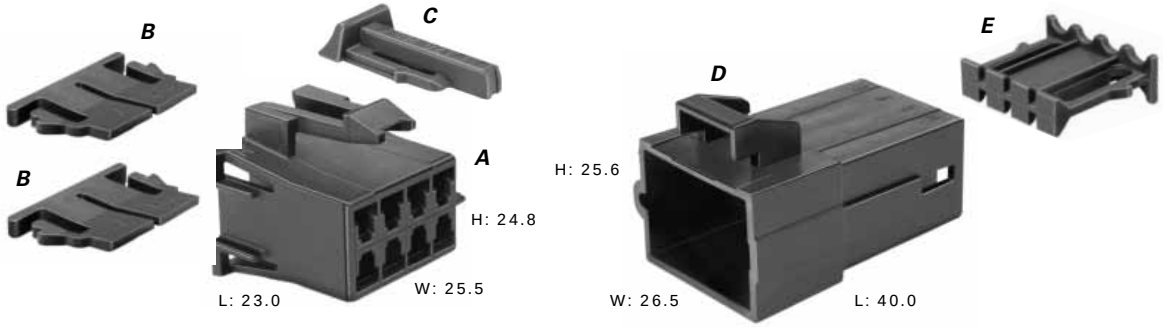


Total Mated Length: 54.0mm

### A. Part No: 12064998

| | |
|---|---|
| Description: | Connector 8F |
| Size: | 23.0L x 24.8H x 25.5W |
| Color: | Black |
| Material: | PA66 HS IM |
| Terminals: | See Page 2.24 |

### B. Part No: 12064999

| | |
|---|---|
| Description: | TPA |
| Number Req: | 2 |
| Color: | Blue |
| Material: | PBT |

### C. Part No: 12052834

| | |
|---|---|
| Description: | CPA |
| Color: | Green |
| Material: | PP |

### D. Part No: 12066195

| | |
|---|---|
| Description: | Connector 8M (Clip Slot) |
| Size: | 40.0L x 25.6H x 26.5W |
| Color: | Black |
| Material: | PA66 HS IM |
| Terminals: | See Page 2.25 |

### E. Part No: 12065141

| | |
|---|---|
| Description: | TPA |
| Color: | Md. Gray |
| Material: | PA66 HS IM |

**NOTE:** Specifications in this catalog are for general reference only and are subject to change without notice. To verify product information, please contact a Delphi representative.

# 280

## Cross Sectional View

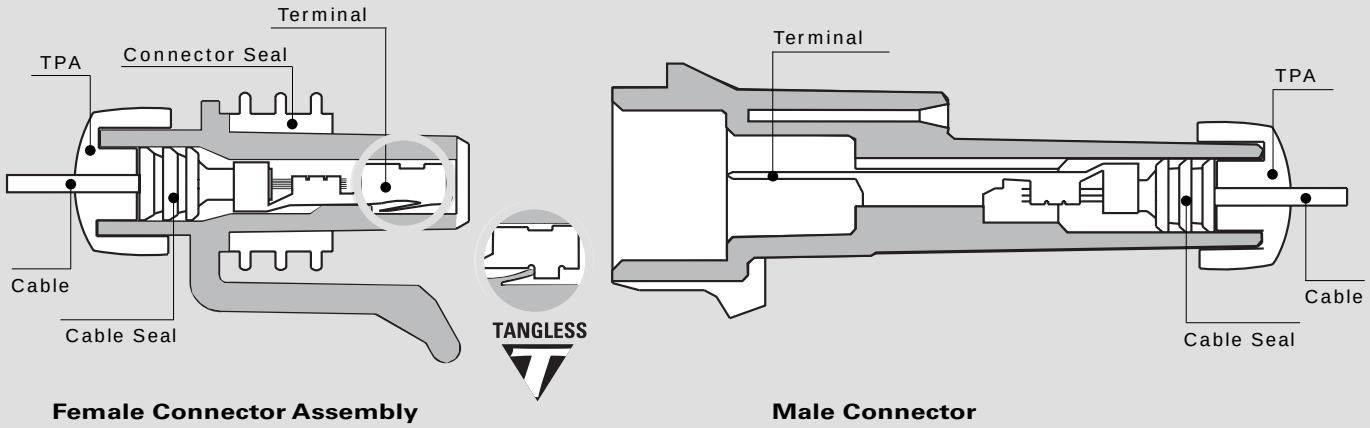


**Female Connector Assembly** **Male Connector**

### 280 Tangless Female Terminals Sealed

| Part # | Cable Range (mm²) | Material | Plating |
|---|---|---|---|
| 12110853 | 5.0-3.0 | Tin Brass | Tin |
| 12129409 | 2.0-1.0 | Tin Brass | Tin |
| 12110845* | 3.0-2.0 | Tin Brass | Tin |
| 12110847* | 1.0-0.80 | Tin Brass | Tin |
| 12110846* | 0.50-0.35 | Tin Brass | Tin |

***Thin Stock**—Electrical current restrictions apply.

### 280 Flexlock Female Connector Assemblies Sealed

| # Cavities | Conn. Asm. | Color | Material | TPA |
|---|---|---|---|---|
| 7 | 12110751 | Black | PA66 HS IM | 12110754 |
| 15 | 12161186 | Black | PA66 HS IM | 12110782 |

### 280 Female Terminals Sealed

| Part # | Cable Range (mm²) | Material | Plating |
|---|---|---|---|
| 12077413 | 3.0 | Tin Brass | Tin |
| 12129493 | 3.0-2.0 | Tin Brass | Tin |
| 12077411 | 1.0-0.80-0.50 | Tin Brass | Tin |
| 12084201 | 0.50-0.35 | Tin Brass | Tin |
| 12176387 | 5.0 | Beryllium Copper | Silver/Nickel |
| 12176388 | 3.0-2.0 | Beryllium Copper | Silver/Nickel |
| 12176389 | 1.0-0.80 | Beryllium Copper | Silver/Nickel |

### 280.1 Female Pull-to-Seat Terminals Sealed

| Part # | Cable Range (mm²) | Material | Plating |
|---|---|---|---|
| 12077939 | 1.0-0.80-0.50 | Silicon Bronze | Tin |
| 12103360 | 0.50-0.35 | Silicon Bronze | Tin |

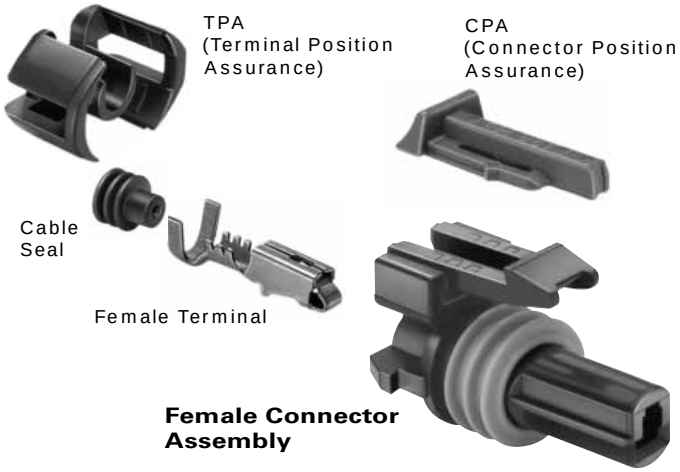


**Female Connector Assembly**

### 280 Female Connector Assemblies Sealed

| # Cavities | Conn. Asm. | Color | Material | TPA |
|---|---|---|---|---|
| 1 | 12065172 | Black | PA66 HS IM | 12065249 |
| 2 | 15300027 | Black | PA66 HS IM | 15300014 |
| 2 | 12124819 | Black | PBT | 12020807 |
| 3 | 12040977 | Black | PA66 HS IM | 12034145 |
| 4 | 12129565 | Md. Gray | PA66 HS IM | 15300016 |
| 5 | 12084891 | Md. Gray | PA66 HS IM | 15324857 |

### 280 Metri-Pack Cable Seals

| Reel Part # | Loose Part # | Cable Dia. | Material | Color |
|---|---|---|---|---|
| 12015360 | 15324981 | 4.30-3.45 | Silicone | Blue |
| 12015359 | 15324980 | 3.49-2.81 | Silicone | Gray |
| 12015284 | 15324982 | 2.85-2.03 | Silicone | Green |
| 12041352 | 15324984 | 2.42-2.03 | Silicone | Tan |
| 12089444 | 15324985 | 2.15-1.60 | Silicone | Purple |
| 12034365 | 15324983 | 1.70-1.29 | Silicone | Dk. Red |

**NOTE:** Specifications in this catalog are for general reference only and are subject to change without notice. To verify product information, please contact a Delphi representative.

# 280

## Sealed System Application Information

### 280 Series Terminals – Tin Plated

CABLE RANGE (mm²): ..... 0.35-5.0

CURRENT RANGE (AMPS): ..... 0-30

TEMP RANGE °C: ..... -40 to 125

RESISTANCE: ..... <10mΩ@20mV

VOLTAGE DROP: ..... <3.0mV/amp

CENTERLINE SPACING (mm): ..... 7.7

BLADE WIDTH (mm): ..... 2.8

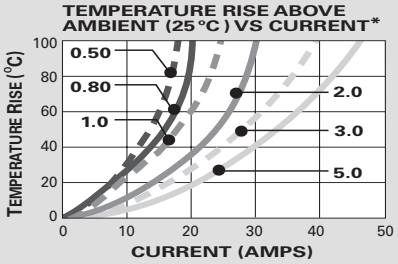


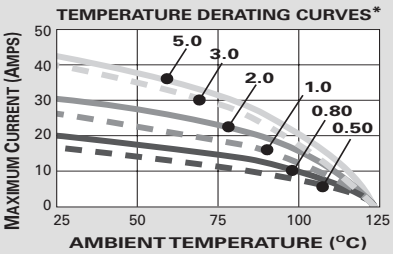


*The test data are based on single circuits in free space and were generated using a "Lumped Resistance" model. This model does not account for all of the variables that would be present in an actual application. For actual product performance, contact your regional support representative.

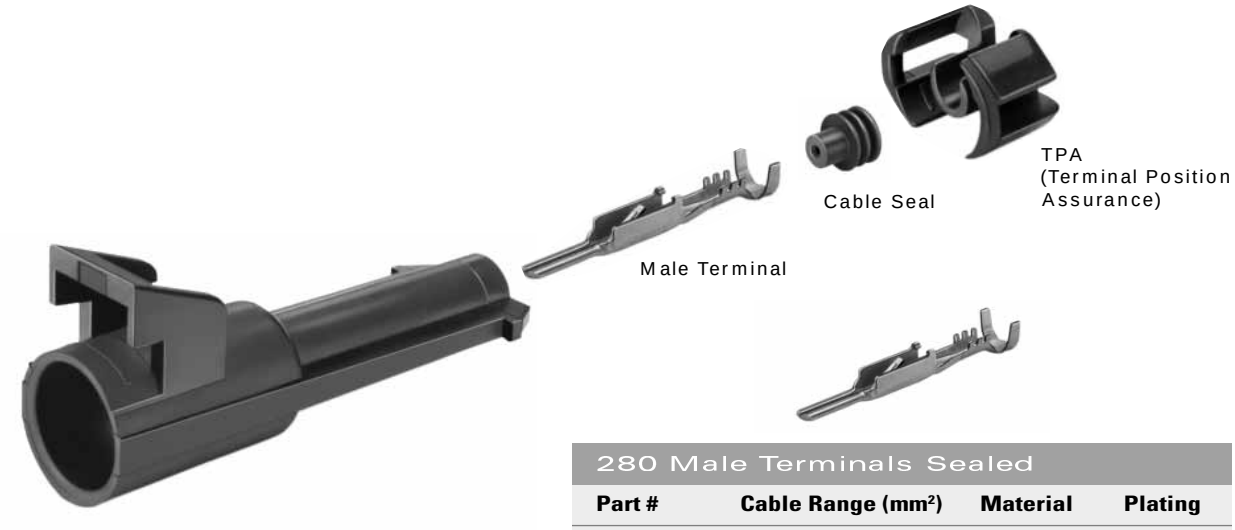


**Male Connector**

### 280 Male Terminals Sealed

| Part # | Cable Range (mm²) | Material | Plating |
|---|---|---|---|
| 12048254 | 3.0 | Tin Brass | Tin |
| 12129497 | 3.0-2.0 | Tin Brass | Tin |
| 12048159 | 0.80-0.50 | Tin Brass | Tin |
| 12124977 | 0.50-0.35 | Tin Brass | Tin |

### 280 Male Connectors Sealed

| # Cavities | Connector | Color | Material | TPA |
|---|---|---|---|---|
| 1 | 12065171 | Black | PA66 HS IM | 12065249 |
| 2 | 15300002 | Black | PA66 HS IM | 15300014 |
| 2 | 12059450 | Black | PA66 HS IM | 12065279 |
| 3 | 15300003 | Black | PA66 HS IM | 15300015 |
| 4 | 12129600 | Dk.Gray | PBT 30% GF | 15324063 |
| 5 | 12186400 | Gray | PBT 30% GF | 12084673 |
| 7 | 12110753 | Black | PA66 HS IM | 12110754 |
| 15 | 12161187 | Black | PA66 HS IM 14% GF | 12176865 |

### 280 Metri-Pack Cavity Plug*

| Part # | Cavity Inside Diameter | Material | Color |
|---|---|---|---|
| 12010300 | 6.7mm | Silicone | Green |

*Cavity plugs seal unused female and male cavities.

**SECTION NOTES:**

- Due to rigid tolerances of connector cavities, it is critical to meet all crimp dimensions as specified.
- Female Connections for device applications, see page 2.38.

**NOTE:** Specifications in this catalog are for general reference only and are subject to change without notice. To verify product information, please contact a Delphi representative.

# 280

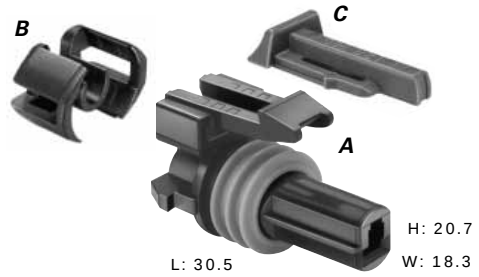


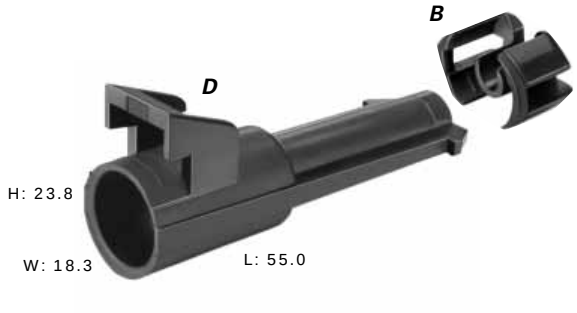


Total Mated Length: 70.3mm

### A. Part No: 12065172

| | |
|---|---|
| Description: | Connector Assembly 1F |
| Size: | 30.5L x 20.7H x 18.3W |
| Color: | Black |
| Material: | PA66 HS IM |
| Terminals: | See Page 2.30 |
| Seals/Plugs: | See Page 2.30, 2.31 |

### B. Part No: 12065249

| | |
|---|---|
| Description: | TPA |
| Number Req: | 2 |
| Color: | Black |
| Material: | PA66 HS IM |

### C. Part No: 12052834

| | |
|---|---|
| Description: | CPA |
| Color: | Green |
| Material: | PP |

### D. Part No: 12065171

| | |
|---|---|
| Description: | Connector 1M |
| Size: | 55.0L x 23.8H x 18.3W |
| Color: | Black |
| Material: | PA66 HS IM |
| Terminals: | See Page 2.31 |
| Seals/Plugs: | See Page 2.30, 2.31 |

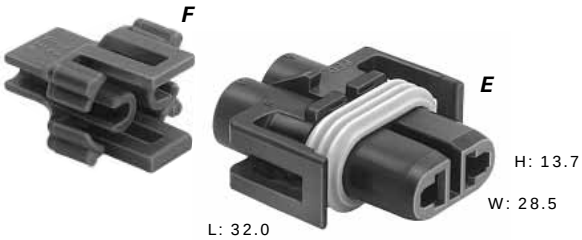


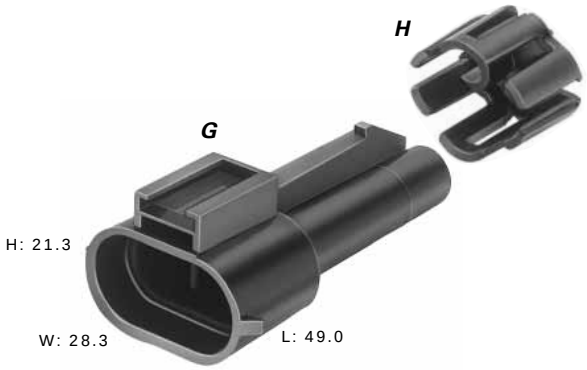


Total Mated Length: 81.9mm

### E. Part No: 12124819

| | |
|---|---|
| Description: | Connector Assembly 2F |
| Size: | 32.0L x 13.7H x 28.5W |
| Color: | Black |
| Material: | PBT |
| Terminals: | See Page 2.30 |
| Seals/Plugs: | See Page 2.30, 2.31 |

### F. Part No: 12020807

| | |
|---|---|
| Description: | TPA |
| Color: | Md. Gray |
| Material: | PA66 HS IM |

### G. Part No: 12059450

| | |
|---|---|
| Description: | Connector 2M (Clip Slot) |
| Size: | 49.0L x 21.3H x 28.3W |
| Color: | Black |
| Material: | PA66 HS IM |
| Terminals: | See Page 2.31 |
| Seals/Plugs: | See Page 2.30, 2.31 |

### H. Part No: 12065279

| | |
|---|---|
| Description: | TPA |
| Color: | Black |
| Material: | PA6 |

**NOTE:** Specifications in this catalog are for general reference only and are subject to change without notice. To verify product information, please contact a Delphi representative.

# 280

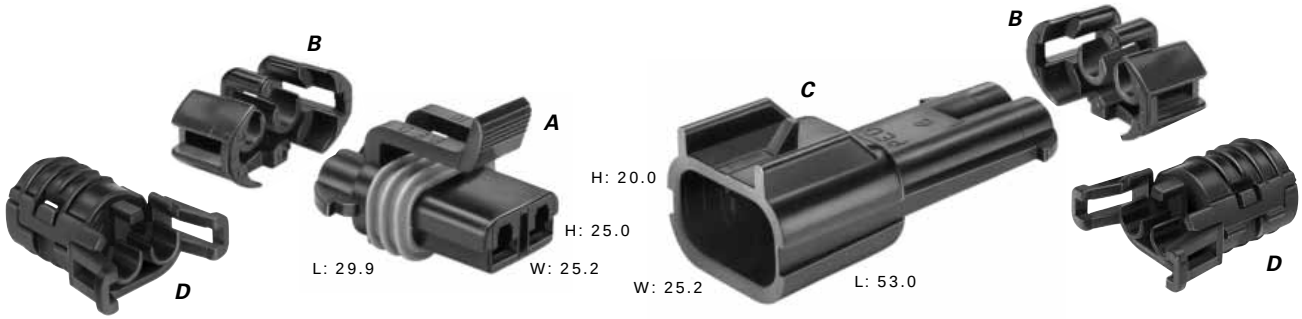


Total Mated Length: 66.8mm

### A. Part No: 15300027

| | |
|---|---|
| Description: | Connector Assembly 2F |
| Size: | 29.9L x 25.0H x 25.2W |
| Color: | Black |
| Material: | PA66 HS IM |
| Terminals: | See Page 2.30 |
| Seals/Plugs: | See Page 2.30, 2.31 |

### B. Part No: 15300014

| | |
|---|---|
| Description: | TPA |
| Number Req.: | 2 |
| Color: | Blue |
| Material: | PA66 HS IM |

### C. Part No: 15300002

| | |
|---|---|
| Description: | Connector 2M |
| Size: | 53.0L x 20.0H x 25.2W |
| Color: | Black |
| Material: | PA66 HS IM |
| Terminals: | See Page 2.31 |
| Seals/Plugs: | See Page 2.30, 2.31 |

### D. Part No: 15327747 (Optional)

| | |
|---|---|
| Description: | Conduit TPA |
| Number Req.: | 2 |
| Color: | Black |
| Material: | PA6 |

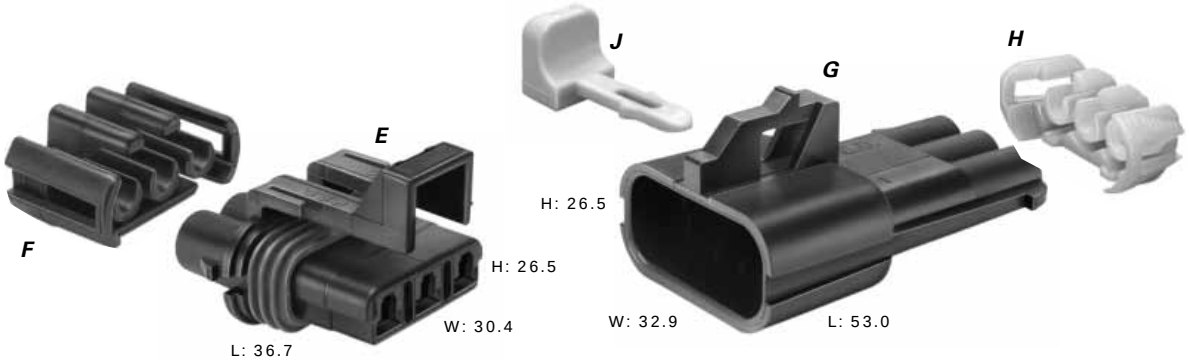


Total Mated Length: 76.1mm

### E. Part No: 12040977

| | |
|---|---|
| Description: | Connector Assembly 3F |
| Size: | 36.7L x 26.5H x 30.4W |
| Color: | Black |
| Material: | PA66 HS IM |
| Terminals: | See Page 2.30 |
| Seals/Plugs: | See Page 2.30, 2.31 |

### F. Part No: 12034145

| | |
|---|---|
| Description: | TPA |
| Color: | Black |
| Material: | PA66 HS IM |

### G. Part No: 15300003

| | |
|---|---|
| Description: | Connector 3M (Clip Slot) |
| Size: | 53.0L x 26.5H x 32.9W |
| Color: | Black |
| Material: | PA66 HS IM |
| Terminals: | See Page 2.31 |
| Seals/Plugs: | See Page 2.30, 2.31 |

### H. Part No: 15300015

| | |
|---|---|
| Description: | TPA |
| Color: | Cream |
| Material: | PA66 HS IM |

### J. Part No: 12020833

| | |
|---|---|
| Description: | CPA |
| Color: | Gray |
| Material: | PBT |

**NOTE:** Specifications in this catalog are for general reference only and are subject to change without notice. To verify product information, please contact a Delphi representative.

# 280

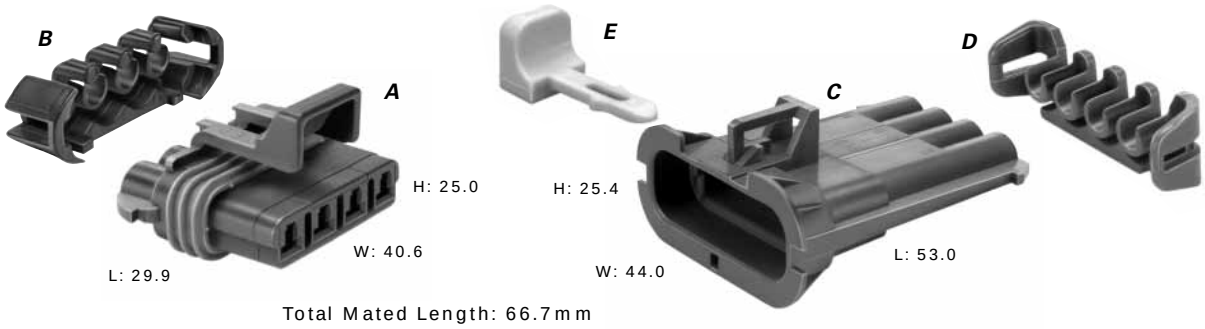


Total Mated Length: 66.7mm

### A. Part No: 12129565

| | |
|---|---|
| Description: | Connector Assembly 4F |
| Size: | 29.9L x 25.0H x 40.6W |
| Color: | Md. Gray |
| Material: | PA66 HS IM |
| Terminals: | See Page 2.30 |
| Seals/Plugs: | See Page 2.30, 2.31 |

### B. Part No: 15300016

| | |
|---|---|
| Description: | TPA |
| Color: | Black |
| Material: | PA66 HS IM |

### C. Part No: 12129600

| | |
|---|---|
| Description: | Connector 4M (Clip Slot–Self Locking) |
| Size: | 53.0L x 25.4H x 44.0W |
| Color: | Dk. Gray |
| Material: | PBT 30% GF |
| Terminals: | See Page 2.31 |
| Seals/Plugs: | See Page 2.30, 2.31 |

### D. Part No: 15324063

| | |
|---|---|
| Description: | TPA |
| Color: | Blue |
| Material: | PA66 HS IM |

### E. Part No: 12020833

| | |
|---|---|
| Description: | CPA |
| Color: | Gray |
| Material: | PBT |

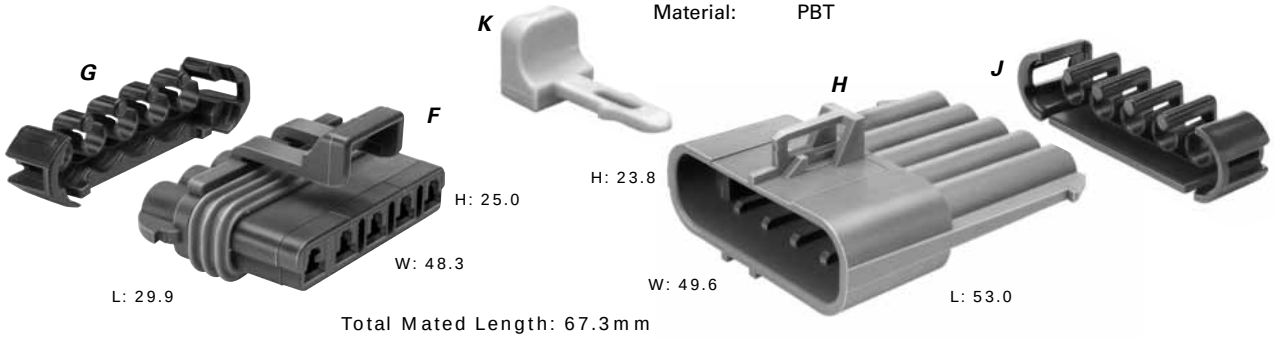


Total Mated Length: 67.3mm

### F. Part No: 12084891

| | |
|---|---|
| Description: | Connector Assembly 5F |
| Size: | 29.9L x 25.0H x 48.3W |
| Color: | Md. Gray |
| Material: | PA66 HS IM |
| Terminals: | See Page 2.30 |
| Seals/Plugs: | See Page 2.30, 2.31 |

### G. Part No: 15324857

| | |
|---|---|
| Description: | TPA |
| Color: | Black |
| Material: | PA66 HS IM |

### H. Part No: 12186400

| | |
|---|---|
| Description: | Connector 5M (Clip Slot–Self Locking) |
| Size: | 53.0L x 23.8H x 49.6W |
| Color: | Gray |
| Material: | PBT 30% GF |
| Terminals: | See Page 2.31 |
| Seals/Plugs: | See Page 2.30, 2.31 |

### J. Part No: 12084673

| | |
|---|---|
| Description: | TPA |
| Color: | Black |
| Material: | PA66 HS IM |

### K. Part No: 12020833

| | |
|---|---|
| Description: | CPA |
| Color: | Gray |
| Material: | PBT |

**NOTE:** Specifications in this catalog are for general reference only and are subject to change without notice. To verify product information, please contact a Delphi representative.

# 280

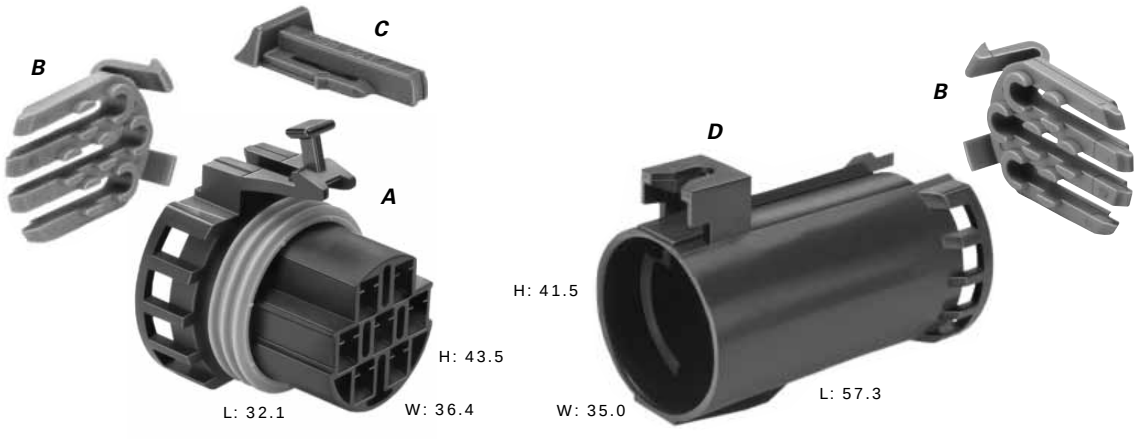


Total Mated Length: 77.3mm

TANGLESS

## A. Part No: 12110751 (Black)
## 12129613 (Md. Gray)
## 12146841 (Cream)

| | |
|---|---|
| Description: | Connector Assembly 7F |
| Size: | 32.1L x 43.5H x 36.4W |
| Material: | PA66 HS IM |
| Terminals: | See Page 2.30 |
| Seals/Plugs: | See Page 2.30, 2.31 |

## B. Part No: 12110754

| | |
|---|---|
| Description: | TPA |
| Number Req: | 2 |
| Color: | Lt. Gray |
| Material: | PA66 HS IM |

## C. Part No: 12052834

| | |
|---|---|
| Description: | CPA |
| Color: | Green |
| Material: | PP |

## D. Part No: 12110753 (Black)
## 12129614 (Md. Gray)
## 12146840 (Cream)

| | |
|---|---|
| Description: | Connector 7M (Clip Slot–Self Locking) |
| Size: | 57.3L x 41.5H x 35.0W |
| Material: | PA66 HS IM |
| Terminals: | See Page 2.31 |
| Seals/Plugs: | See Page 2.30, 2.31 |

**NOTE:** Specifications in this catalog are for general reference only and are subject to change without notice. To verify product information, please contact a Delphi representative.

# 280

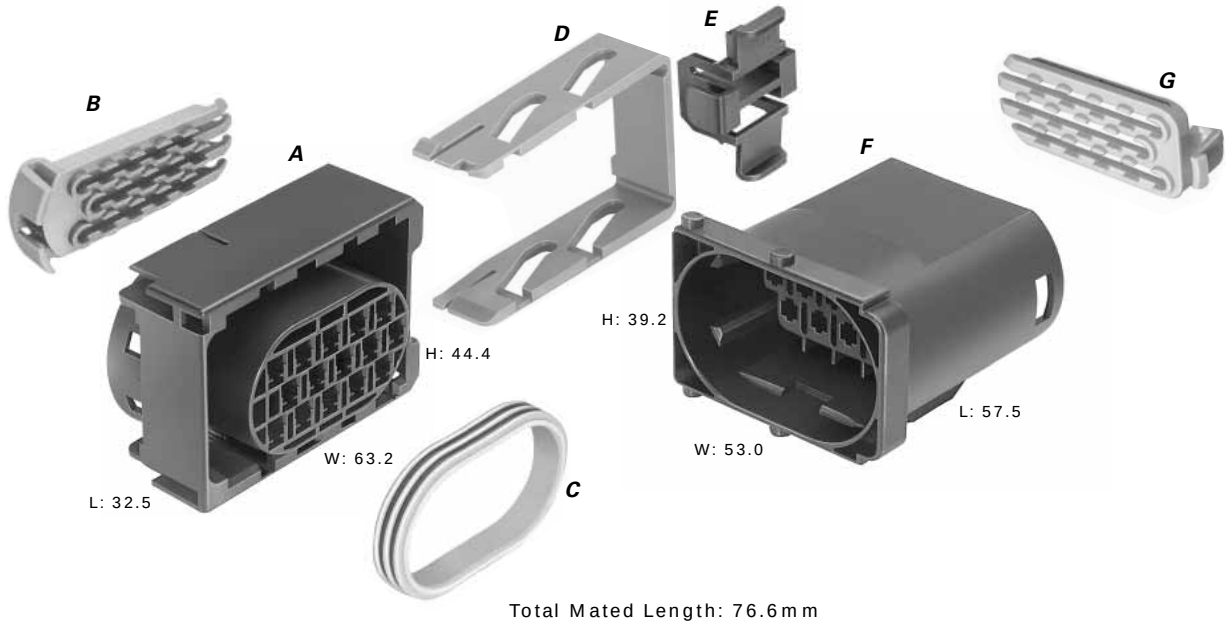


Total Mated Length: 76.6mm

TANGLESS

## A. Part No: 12161186

| | |
|---|---|
| Description: | Connector 15F |
| Size: | 32.5L x 44.4H x 63.2W |
| Color: | Black |
| Material: | PA66 HS IM |
| Terminals: | See Page 2.30 |
| Seals/Plugs: | See Page 2.30, 2.31 |

## B. Part No: 12110782

| | |
|---|---|
| Description: | TPA |
| Color: | Md. Gray |
| Material: | PA66 HS IM |

## C. Part No: 12110822

| | |
|---|---|
| Description: | Connector Seal |
| Color: | Green |
| Material: | Silicone |

## D. Part No: 12161185

| | |
|---|---|
| Description: | CPA Slide Lock Assist |
| Color: | Dk. Gray |
| Material: | PA66 HS IM 14% GF |

## E. Part No: 12176640

| | |
|---|---|
| Description: | Spacer Lock |
| Color: | Black |
| Material: | PP |

## F. Part No: 12161187

| | |
|---|---|
| Description: | Connector 15M (Clip Slot–Self Locking) |
| Size: | 57.5L x 39.2H x 53.0W |
| Color: | Black |
| Material: | PA66 HS IM 14% GF |
| Terminals: | See Page 2.31 |
| Seals/Plugs: | See Page 2.30, 2.31 |

## G. Part No: 12176865

| | |
|---|---|
| Description: | TPA |
| Color: | Lt. Gray |
| Material: | PA66 HS IM |

**NOTE:** Specifications in this catalog are for general reference only and are subject to change without notice. To verify product information, please contact a Delphi representative.

# 280 Device Connections

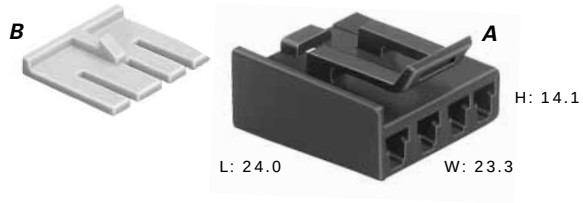


### A. Part No: 12052856

| | |
|---|---|
| Description: | Connector 4F |
| Size: | 24.0L x 14.1H x 23.3W |
| Color: | Black |
| Material: | PA66 HS IM |
| Terminals: | See Page 2.24 |
| Typical App: | Dimmer Switch |

### B. Part No: 15324456

| | |
|---|---|
| Description: | TPA |
| Color: | Dk. Green |
| Material: | PA66 HS IM |

### C. Part No: 12084890

| | |
|---|---|
| Description: | Connector 5F |
| Size: | 29.9L x 24.2H x 48.3W |
| Color: | Md. Gray |
| Material: | PA66 HS IM |
| Terminals: | See Page 2.24 |
| Typical App: | Tail Lamp Module |

### D. Part No: 15324857

| | |
|---|---|
| Description: | TPA |
| Color: | Black |
| Material: | PA66 HS IM |

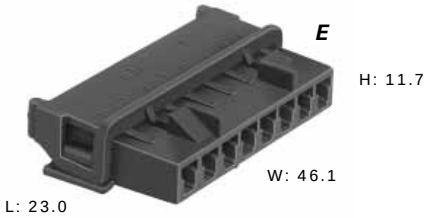


### E. Part No: 12041301*

| | |
|---|---|
| Description: | Connector 8F |
| Size: | 23.0L x 11.7H x 46.1W |
| Color: | Black |
| Material: | PP |
| Terminals: | See Page 2.24 |
| Typical App: | Various |

*Hinged secondary lock.

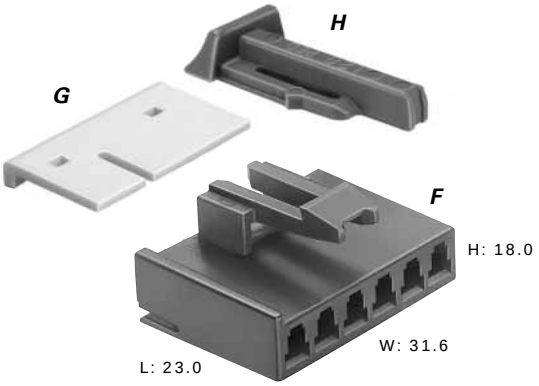


### F. Part No: 12092254

| | |
|---|---|
| Description: | Connector 6F |
| Size: | 23.0L x 18.0H x 31.6W |
| Color: | Black |
| Material: | PA66 HS IM |
| Terminals: | See Page 2.24 |
| Typical App: | Wiper Switch |

### G. Part No: 12092252

| | |
|---|---|
| Description: | TPA |
| Color: | Cream |
| Material: | PA6 |

### H. Part No: 12052834

| | |
|---|---|
| Description: | CPA |
| Color: | Green |
| Material: | PP |

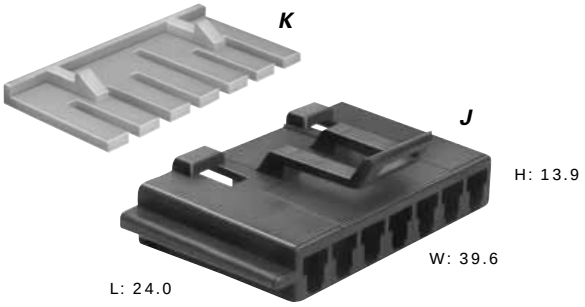


### J. Part No: 12052854

| | |
|---|---|
| Description: | Connector 7F |
| Size: | 24.0L x 13.9H x 39.6W |
| Color: | Black |
| Material: | PA66 HS IM |
| Terminals: | See Page 2.24 |
| Typical App: | Wiper Switch |

### K. Part No: 12124811

| | |
|---|---|
| Description: | TPA |
| Color: | Cream |
| Material: | PA66 HS IM |

**NOTE:** Specifications in this catalog are for general reference only and are subject to change without notice. To verify product information, please contact a Delphi representative.

# 280 Device Connections

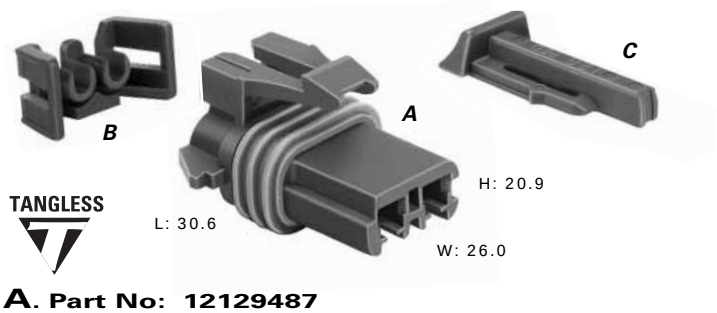


TANGLESS

### A. Part No: 12129487

| | |
|---|---|
| Description: | Connector Assembly 2F |
| Size: | 30.6L x 20.9H x 26.0W |
| Color: | Md. Gray |
| Material: | PA66 HS IM |
| Terminals: | See Page 2.30 |
| Seals/Plugs: | See Page 2.30, 2.31 |
| Typical App: | Window Lift Motor |

### B. Part No: 12077904

| | |
|---|---|
| Description: | TPA |
| Color: | Blue |
| Material: | PA66 HS IM |

### C. Part No: 12052834

| | |
|---|---|
| Description: | CPA |
| Color: | Green |
| Material: | PP |

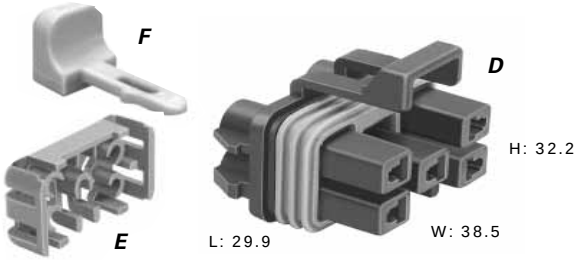


### D. Part No: 12124634

| | |
|---|---|
| Description: | Connector Assembly 5F |
| Size: | 29.9L x 32.2H x 38.5W |
| Color: | Black |
| Material: | PA6 |
| Terminals: | See Page 2.30 |
| Seals/Plugs: | See Page 2.30, 2.31 |
| Typical App: | Wiper Switch |

### E. Part No: 12052816

| | |
|---|---|
| Description: | TPA |
| Color: | Md. Gray |
| Material: | PA66 HS IM |

### F. Part No: 12020833

| | |
|---|---|
| Description: | CPA |
| Color: | Gray |
| Material: | PBT |

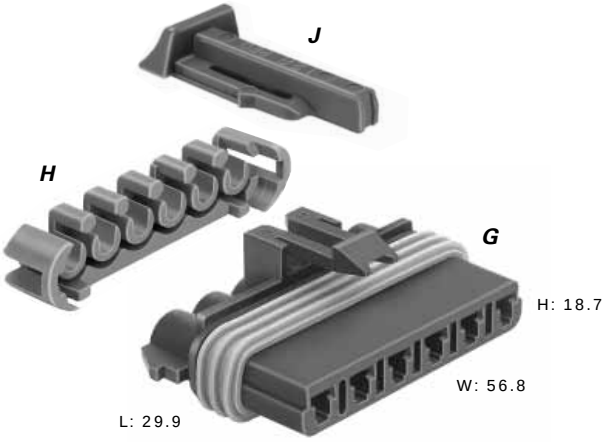


### G. Part No: 12059573

| | |
|---|---|
| Description: | Connector Assembly 6F |
| Size: | 29.9L x 18.7H x 56.8W |
| Color: | Black |
| Material: | PA66 |
| Terminals: | See Page 2.30 |
| Seals/Plugs: | See Page 2.30, 2.31 |
| Typical App: | Various |

### H. Part No: 12059195

| | |
|---|---|
| Description: | TPA |
| Color: | Blue |
| Material: | PA6 |

### J. Part No: 12052834

| | |
|---|---|
| Description: | CPA |
| Color: | Green |
| Material: | PP |

**NOTE:** Specifications in this catalog are for general reference only and are subject to change without notice. To verify product information, please contact a Delphi representative.

# 280.1 Pull-to-Seat



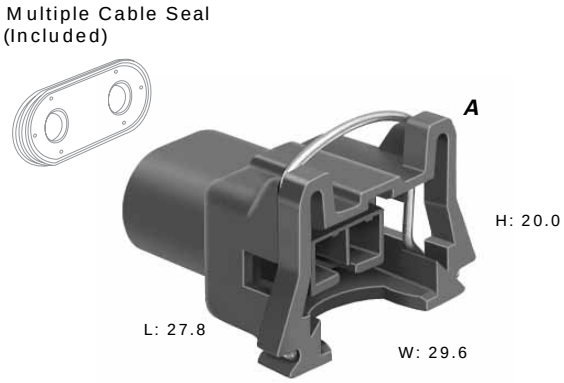


| | |
|---|---|
| **A. Part No:** | **12129142 (Black/Gray Seal)** |
| | 2.66 - 2.0 Cable O.D. |
| **Part No:** | **12129140 (Black/Purple Seal)** |
| | 2.15 - 1.65 Cable O.D. |
| **Part No:** | **12110179 (Black/Orange Red Seal)** |
| | 1.85 - 1.47 Cable O.D. |
| Description: | Connector Assembly 2F |
| Size: | 27.8L x 20.0H x 29.6W |
| Material: | PA66 HS 33% GF |
| Terminals: | See Page 2.30 |
| Typical App: | Fuel Injector |

**NOTE:** Specifications in this catalog are for general reference only and are subject to change without notice. To verify product information, please contact a Delphi representative.

# 480

Available in device and in-line connections for vehicle applications, Metri-Pack 480 Series connectors can meet or exceed the requirements for most marine, appliance, and industrial control applications.

Ideally suited for high current applications that do not require environmental protection, Metri-Pack 480 Series products are extremely rugged and versatile.

Available in device and in-line connections for underhood vehicle applications, Metri-Pack 480 Series sealed connectors can meet or exceed the requirements for most marine, appliance, and industrial control applications.

Utilizing triple-rib peripheral silicone rubber seals, Metri-Pack 480 Series sealed systems are ideally suited for high current applications that require protection from environmental hazards.

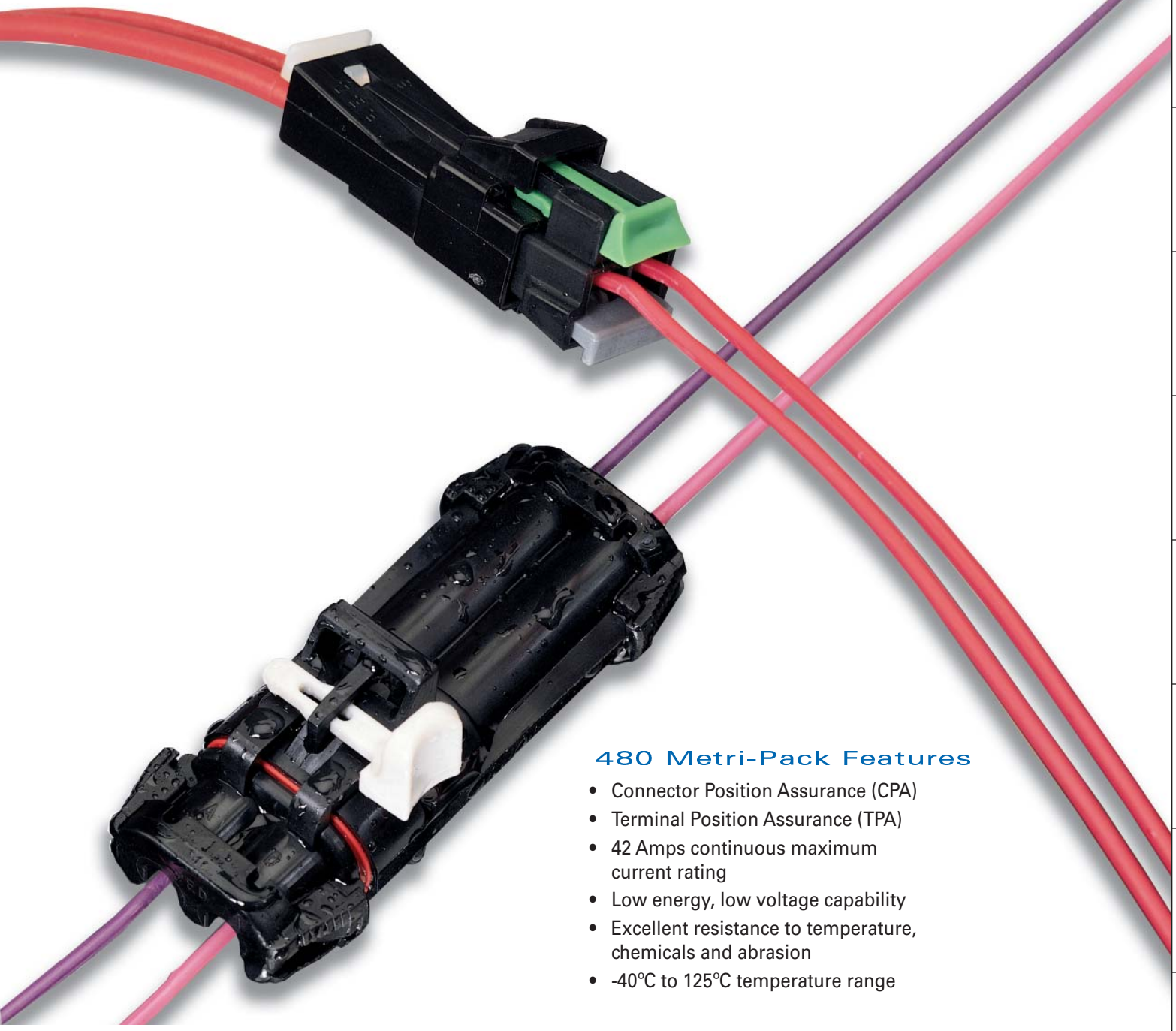

## 480 Metri-Pack Features

- Connector Position Assurance (CPA)
- Terminal Position Assurance (TPA)
- 42 Amps continuous maximum current rating
- Low energy, low voltage capability
- Excellent resistance to temperature, chemicals and abrasion
- -40°C to 125°C temperature range

# 480

## Cross Sectional View

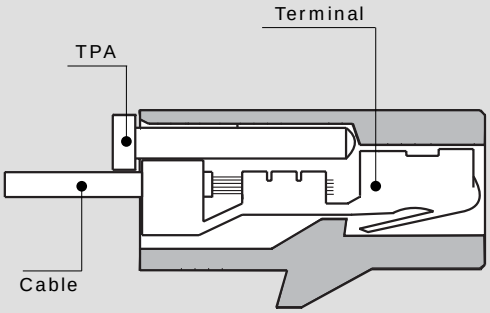


**Female Connector**

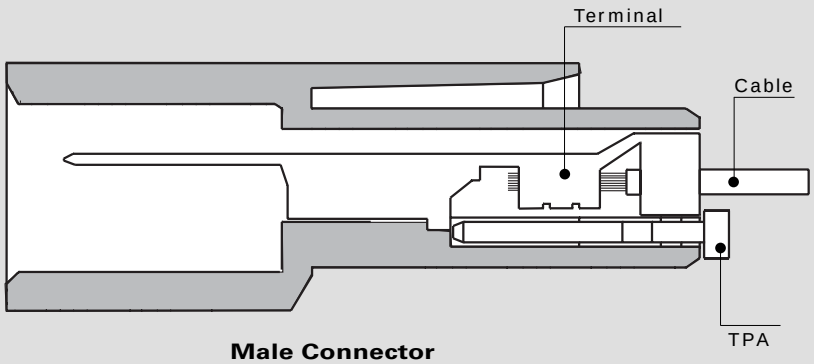


**Male Connector**

TPA
(Terminal Position
Assurance)

Female Terminal

CPA
(Connector Position
Assurance)

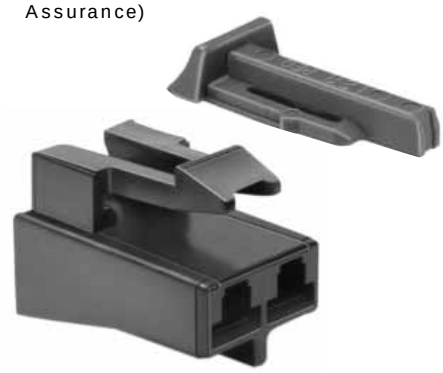

**Female Connector**

### 480 Female Terminals Unsealed

| Part # | Cable Range (mm²) | Material | Plating |
|---|---|---|---|
| 12084595 | 5.0-3.0 | Tin Brass | Tin |
| 12052221 | 3.0 | Tin Brass | Tin |
| 12124304 | 2.0-1.0 | Tin Brass | Tin |
| 12015860 | 0.80-0.50 | Tin Brass | Tin |
| 12052219 | 0.50-0.35 | Tin Brass | Tin |
| 12020366 | 2.0-1.0 (1 Req'd.) | Tin Brass | Tin |
| | 0.80-0.50 (1 Req'd.) | | |

### 480 Female Connectors Unsealed

| # Cavities | Connector | Color | Material | TPA |
|---|---|---|---|---|
| 1 | 12015952 | Md.Gray | PA66 HS IM | – |
| 2 | 12064749 | Black | PA66 HS IM | 12059860 |

**NOTE:** Specifications in this catalog are for general reference only and are subject to change without notice. To verify product information, please contact a Delphi representative.

# 480

## Unsealed System Application Information

CABLE RANGE (mm²): ..... 0.35-5.0

CURRENT RANGE (AMPS): ..... 0-42

TEMP RANGE °C: ..... -40 to 125

RESISTANCE: ..... <10mΩ@20mV

VOLTAGE DROP: ..... <3.0mV/amp

CENTERLINE SPACING (mm): ..... 6.9

BLADE WIDTH (mm): ..... 4.8

### 480 Series Terminals – Tin Plated

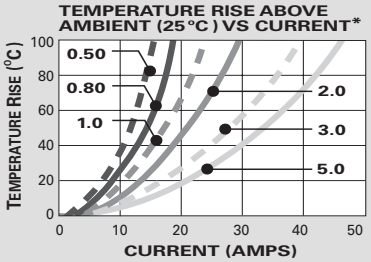


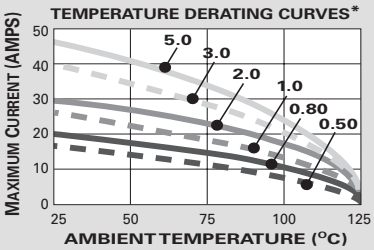


*The test data are based on single circuits in free space and were generated using a "Lumped Resistance" model. This model does not account for all of the variables that would be present in an actual application. For actual product performance, contact your regional support representative.

Male Connector

Male Terminal

TPA
(Terminal Position Assurance)

### 480 Male Connectors Unsealed

| # Cavities | Connector | Color | Material | TPA |
|---|---|---|---|---|
| 1 | 12015987 | Md. Gray | PA66 HS IM | – |
| 2 | 12064750 | Black | PA66 HS IM | 12064751 |

### 480 Male Terminals Unsealed

| Part # | Cable Range (mm²) | Material | Plating |
|---|---|---|---|
| 12033820 | 5.0-3.0 | Tin Brass | Tin over Copper |
| 12052827 | 3.0 | Tin Brass | Tin over Copper |
| 12020120 | 2.0-1.0 | Tin Brass | Tin over Copper |
| 12020119 | 0.80-0.50 | Tin Brass | Tin over Copper |
| 12066269 | 0.50-0.35 | Tin Brass | Tin over Copper |
| 12020784 | 0.35 (2 Req'd.) | Tin Brass | Tin over Copper |

**SECTION NOTES:**

- Due to rigid tolerances of connector cavities, it is critical to meet all crimp dimensions as specified.
- Female connections for device applications, see page 2.49.

**NOTE:** Specifications in this catalog are for general reference only and are subject to change without notice. To verify product information, please contact a Delphi representative.

# 480

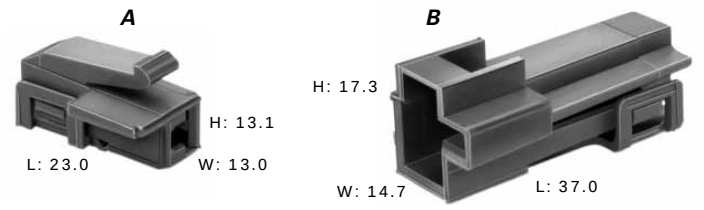


Total Mated Length: 49.6mm

## A. Part No: 12015952*

| | |
|---|---|
| Description: | Connector 1F |
| Size: | 23.0L x 13.1H x 13.0W |
| Color: | Md. Gray |
| Material: | PA66 HS IM |
| Terminals: | See Page 2.42 |

*Hinged secondary lock

## B. Part No: 12015987*

| | |
|---|---|
| Description: | Connector 1M |
| Size: | 37.0L x 17.3H x 14.7W |
| Color: | Md. Gray |
| Material: | PA66 HS IM |
| Terminals: | See Page 2.43 |

*Hinged secondary lock

**NOTE:** Specifications in this catalog are for general reference only and are subject to change without notice. To verify product information, please contact a Delphi representative.

# 480

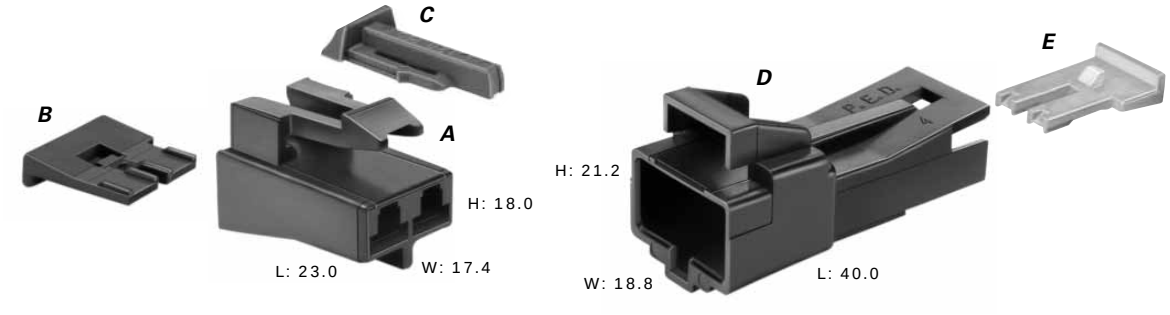


Total Mated Length: 53.9mm

### A. Part No: 12064749

| | |
|---|---|
| Description: | Connector 2F |
| Size: | 23.0L x 18.0H x 17.4W |
| Color: | Black |
| Material: | PA66 HS IM |
| Terminals: | See Page 2.42 |

### B. Part No: 12059860

| | |
|---|---|
| Description: | TPA |
| Color: | Md. Gray |
| Material: | PA66 HS IM |

### C. Part No: 12052834

| | |
|---|---|
| Description: | CPA |
| Color: | Green |
| Material: | PP |

### D. Part No: 12064750

| | |
|---|---|
| Description: | Connector 2M (Clip Slot) |
| Size: | 40.0L x 21.2H x 18.8W |
| Color: | Black |
| Material: | PA66 HS IM |
| Terminals: | See Page 2.43 |

### E. Part No: 12064751

| | |
|---|---|
| Description: | TPA |
| Color: | Cream |
| Material: | PA66 HS IM |

**NOTE:** Specifications in this catalog are for general reference only and are subject to change without notice. To verify product information, please contact a Delphi representative.

# 480

## Cross Sectional View

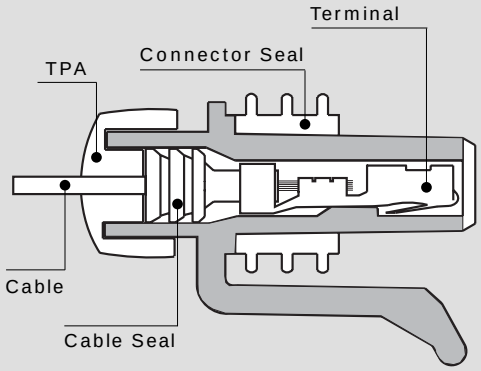


**Female Connector Assembly**

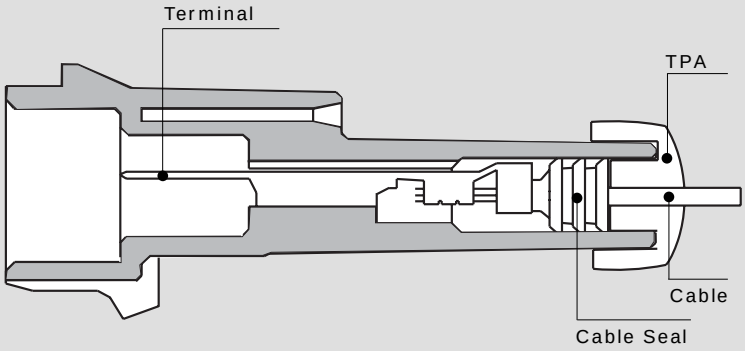


**Male Connector**

**Female Connector Assembly**

### 480 Female Terminals Sealed

| Part # | Cable Range (mm²) | Material | Plating |
|---|---|---|---|
| 12052139 | 5.0-3.0 | Tin Brass | Tin |
| 12048451 | 2.0-1.0 | Tin Brass | Tin |
| 12048450 | 0.80-0.50 | Tin Brass | Tin |

### 480 Metri-Pack Cable Seals

| Reel Part # | Loose Part # | Cable Dia. | Material | Color |
|---|---|---|---|---|
| 12065703 | 15324987 | 5.16-4.40 | Silicone | Orange |
| 12052453 | 15324990 | 4.50-3.61 | Silicone | Purple |
| 12052452 | 15324989 | 3.76-2.81 | Silicone | Red |
| 12048433 | 15324988 | 2.85-2.01 | Silicone | White |
| 12052931 | 15324991 | 2.15-1.60 | Silicone | Yellow |
| 12162068 | 15324992 | 1.70-1.29 | Silicone | Pink |

### 480 Female Connector Assembly Sealed

| # Cavities | Conn. Asm. | Color | Material | TPA |
|---|---|---|---|---|
| 2 | 12052613 | Black | PA66 HS IM | 12059897 |

**NOTE:** Specifications in this catalog are for general reference only and are subject to change without notice. To verify product information, please contact a Delphi representative.

# 480

## Sealed System Application Information

**CABLE RANGE (mm²): ..... 0.50-5.0**

**CURRENT RANGE (AMPS): ..... 0-42**

**TEMP RANGE °C: ..... -40 to 125**

**RESISTANCE: ..... <10mΩ@20mV**

**VOLTAGE DROP: ..... <3.0mV/amp**

**CENTERLINE SPACING (mm): ..... 9.5**

**BLADE WIDTH (mm): ..... 4.8**

### 480 Series Terminals – Tin Plated

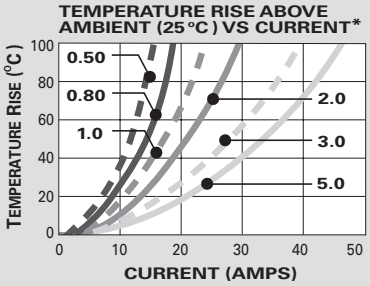


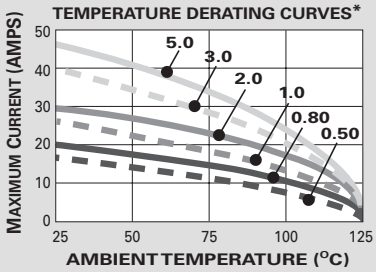


*The test data are based on single circuits in free space and were generated using a "Lumped Resistance" model. This model does not account for all of the variables that would be present in an actual application. For actual product performance, contact your regional support representative.

CPA
(Connector Position Assurance)

Male Terminal

Cable Seal

TPA
(Terminal Position Assurance)

**Male Connector**

### 480 Male Terminals Sealed

| Part # | Cable Range (mm²) | Material | Plating |
|---|---|---|---|
| 12052172 | 5.0 | Tin Brass | Tin |
| 12065197 | 3.0 | Tin Brass | Tin |
| 12065196 | 2.0-1.0 | Tin Brass | Tin |

### 480 Male Connector Sealed

| # Cavities | Connector | Color | Material | TPA |
|---|---|---|---|---|
| 2 | 12065863 | Black | PA66 HS IM | 12059897 |

### 480 Metri-Pack Cavity Plug*

| Part # | Cavity Inside Diameter | Material | Color |
|---|---|---|---|
| 12066082 | 8.5mm | Silicone | Green |

*Cavity plugs seal unused female and male cavities

**SECTION NOTES:**

- Due to rigid tolerances of connector cavities, it is critical to meet all crimp dimensions as specified.
- Female connections for device applications, see page 2.50.

**NOTE:** Specifications in this catalog are for general reference only and are subject to change without notice. To verify product information, please contact a Delphi representative.

# 480

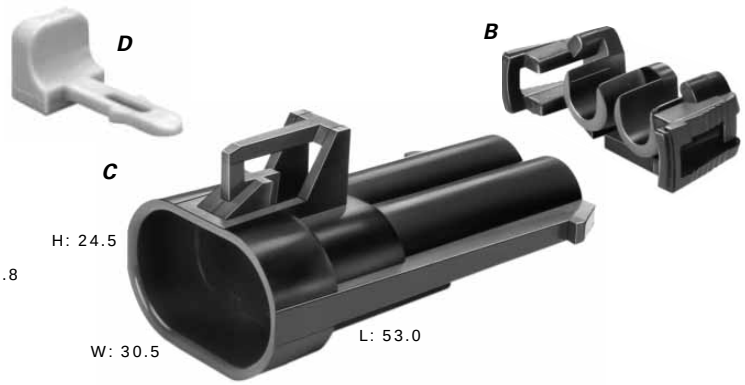


Total Mated Length: 69.2mm

### A. Part No: 12052613

| | |
|---|---|
| Description: | Connector Assembly 2F |
| Size: | 31.0L x 24.8H x 30.5W |
| Color: | Black |
| Material: | PA66 HS IM |
| Terminals: | See Page 2.46 |
| Seals/Plugs: | See Page 2.46, 2.47 |

### B. Part No: 12059897

| | |
|---|---|
| Description: | TPA |
| Number Req: | 2 |
| Color: | Black |
| Material: | PA66 HS IM |

### C. Part No: 12065863

| | |
|---|---|
| Description: | Connector 2M (Clip Slot) |
| Size: | 53.0L x 24.5H x 30.5W |
| Color: | Black |
| Material: | PA66 HS IM |
| Terminals: | See Page 2.47 |
| Seals/Plugs: | See Page 2.46, 2.47 |

### D. Part No: 12020833

| | |
|---|---|
| Description: | CPA |
| Color: | Gray |
| Material: | PBT |

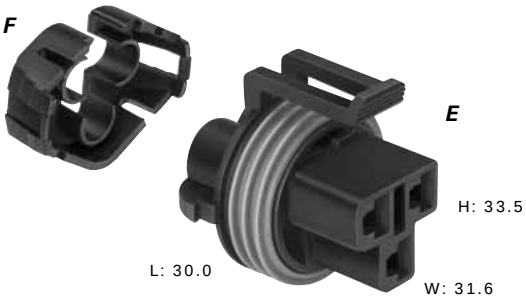

Total Mated Length: 66.5mm

### E. Part No: 12131592

| | |
|---|---|
| Description: | Connector Assembly 3F |
| Size: | 30.0L x 33.5H x 31.6W |
| Color: | Black |
| Material: | PA66 25% GF |
| Terminals: | See Page 2.46 |
| Seals/Plugs: | See Page 2.46, 2.47 |

### F. Part No: 12131543

| | |
|---|---|
| Description: | TPA |
| Number Req: | 2 |
| Color: | Black |
| Material: | PA66 |

### G. Part No: 15344628

| | |
|---|---|
| Description: | Connector 3M |
| Size: | 53.0L x 32.5H x 31.6W |
| Color: | Black |
| Material: | PA6 25% GF |
| Terminals: | See Page 2.47 |
| Seals/Plugs: | See Page 2.46, 2.47 |

**NOTE:** Specifications in this catalog are for general reference only and are subject to change without notice. To verify product information, please contact a Delphi representative.

# 480 Device Connections

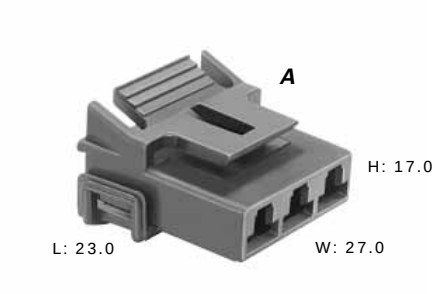


### A. Part No: 12162512*

| | |
|---|---|
| Description: | Connector 3F |
| Size: | 23.0L x 17.0H x 27.0W |
| Color: | Black |
| Material: | PA66 HS IM |
| Terminals: | See Page 2.42 |
| Typical App: | Switch |

*Hinged secondary lock

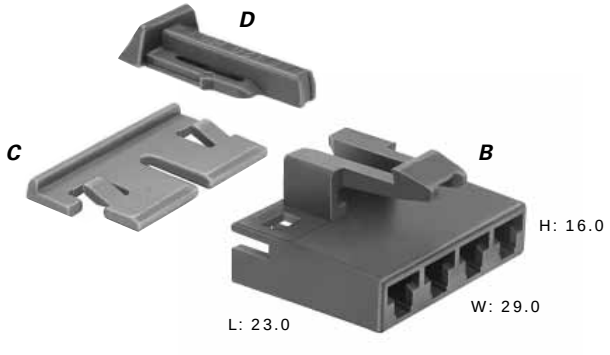


### B. Part No: 12066571

| | |
|---|---|
| Description: | Connector 4F |
| Size: | 23.0L x 16.0H x 29.0W |
| Color: | Black |
| Material: | PA66 HS IM |
| Terminals: | See Page 2.42 |
| Typical App: | Various |

### C. Part No: 12066572

| | |
|---|---|
| Description: | TPA |
| Color: | Md. Gray |
| Material: | PA66 HS IM |

### D. Part No: 12052834

| | |
|---|---|
| Description: | CPA |
| Color: | Green |
| Material: | PP |

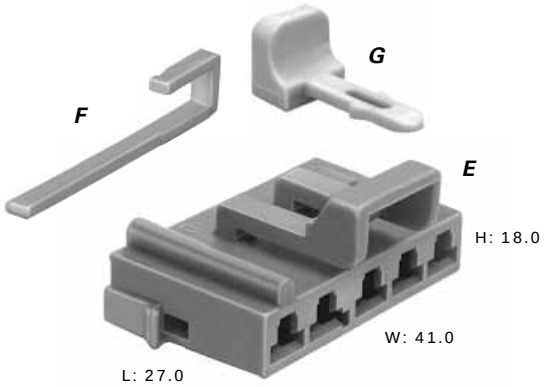


### E. Part No: 12059296

| | |
|---|---|
| Description: | Connector 5F |
| Size: | 27.0L x 18.0H x 41.0W |
| Color: | Red |
| Material: | PA6 |
| Terminals: | See Page 2.42 |
| Typical App: | Switch |

### F. Part No: 12059297

| | |
|---|---|
| Description: | Secondary Lock |
| Color: | Natural |
| Material: | PBT |

### G. Part No: 12020833

| | |
|---|---|
| Description: | CPA |
| Color: | Gray |
| Material: | PBT |

### H. Part No: 12034061*

| | |
|---|---|
| Description: | Connector 6F |
| Size: | 28.0L x 18.0H x 51.0W |
| Color: | Cream |
| Material: | PA66 HS IM |
| Terminals: | See Page 2.42 |
| Typical App: | Switch |

*Hinged secondary lock

**NOTE:** Specifications in this catalog are for general reference only and are subject to change without notice. To verify product information, please contact a Delphi representative.

# 480 Device Connections

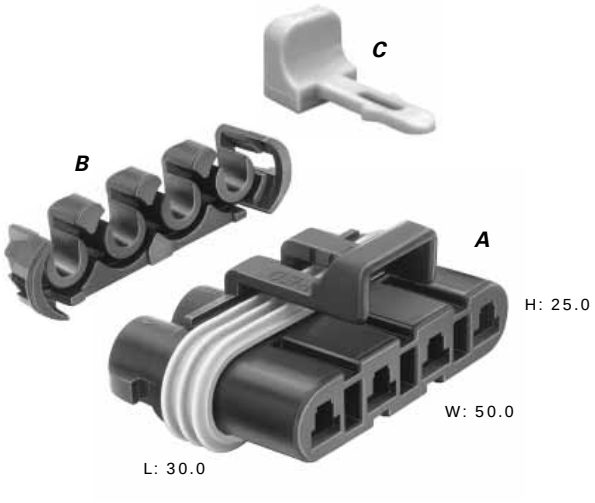


### A. Part No: 12048412

| | |
|---|---|
| Description: | Connector Assembly 4F |
| Size: | 30.0L x 25.0H x 50.0W |
| Color: | Black |
| Material: | PA66 HS IM |
| Terminals: | See Page 2.46 |
| Seals/Plugs: | See Page 2.46, 2.47 |
| Typical App: | Resistor Pack |

### B. Part No: 12048413

| | |
|---|---|
| Description: | TPA |
| Color: | Black |
| Material: | PA66 HS IM |

### C. Part No: 12020833

| | |
|---|---|
| Description: | CPA |
| Color: | Gray |
| Material: | PBT |

**NOTE:** Specifications in this catalog are for general reference only and are subject to change without notice. To verify product information, please contact a Delphi representative.

# 630

Available in device and in-line connections for vehicle applications, Metri-Pack 630 Series connectors can meet or exceed the requirements for most marine, appliance, and industrial control applications.

Ideally suited for high current applications that do not require environmental protection, Metri-Pack 630 Series products are extremely rugged and versatile.

Available in device and in-line connections for underhood vehicle applications, Metri-Pack 630 Series sealed connectors can meet or exceed the requirements for most marine, appliance, and industrial control applications.

Utilizing triple-rib peripheral silicone rubber seals, Metri-Pack 630 Series sealed systems are ideally suited for high current applications that require protection from environmental hazards.

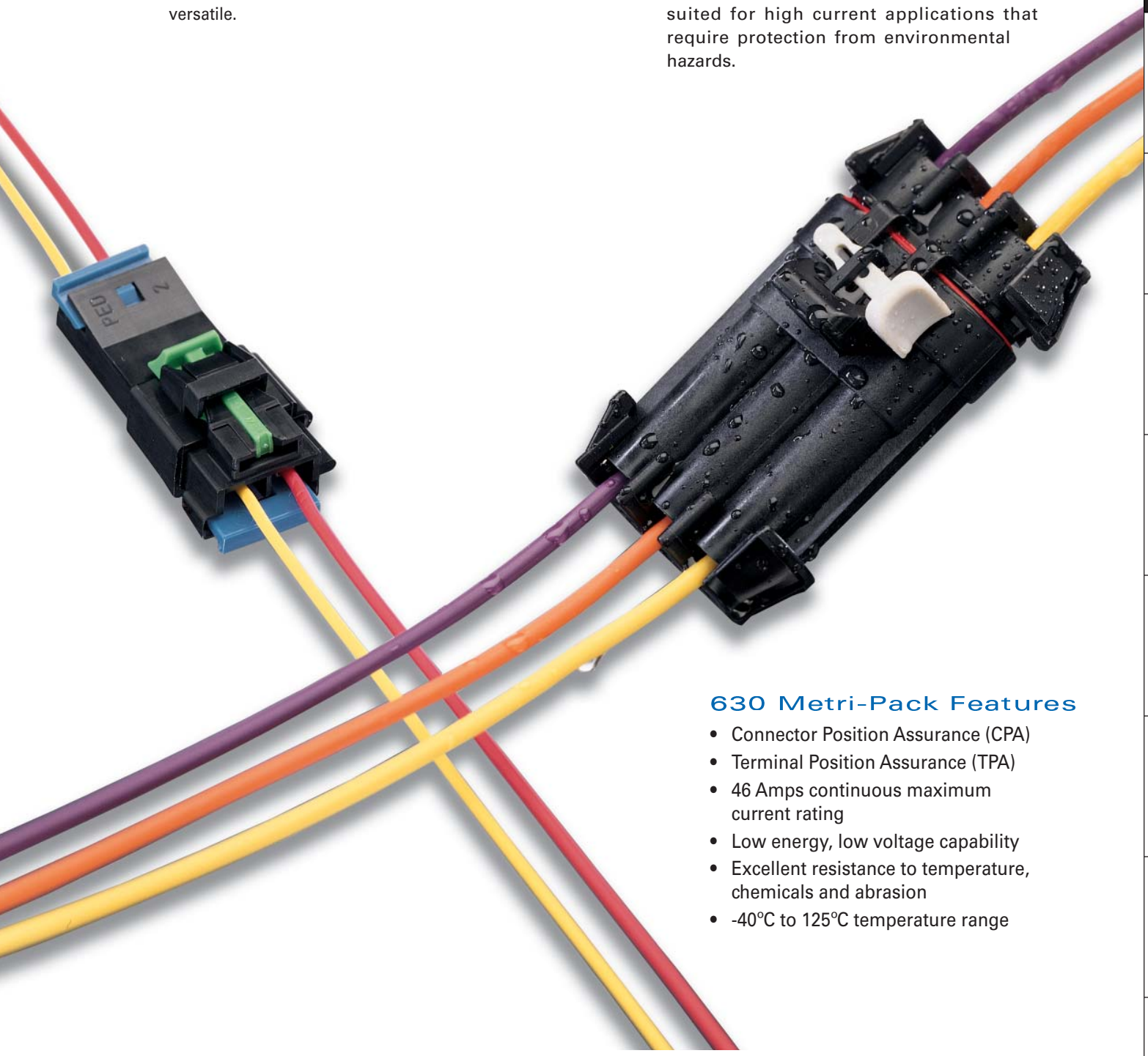

## 630 Metri-Pack Features

- Connector Position Assurance (CPA)
- Terminal Position Assurance (TPA)
- 46 Amps continuous maximum current rating
- Low energy, low voltage capability
- Excellent resistance to temperature, chemicals and abrasion
- -40°C to 125°C temperature range

# 630

## Cross Sectional View

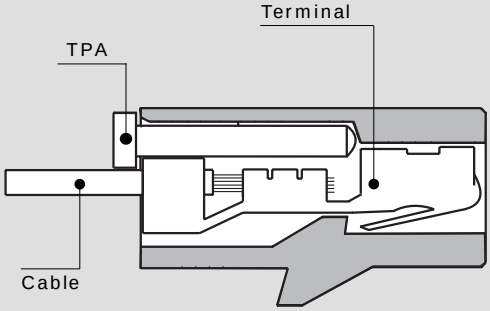


**Female Connector**

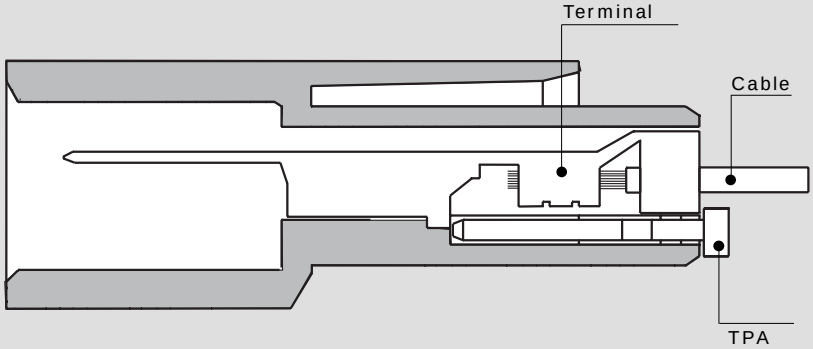


**Male Connector**

TPA
(Terminal Position
Assurance)

Female Terminal

CPA
(Connector Position
Assurance)

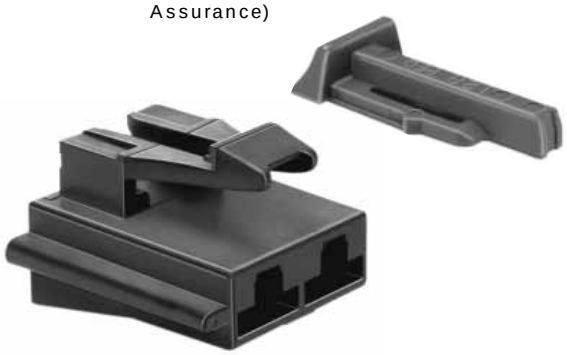

**Female Connector**

### 630 Female Terminals Unsealed

| Part # | Cable Range (mm²) | Material | Plating |
|---|---|---|---|
| 12084590 | 5.0-3.0 | Tin Brass | Tin |
| 12052224 | 3.0 | Tin Brass | Tin |
| 12084596 | 5.0-3.0 (2 Req'd.) | Tin Brass | Tin |
| 12015870 | 2.0-1.0 | Tin Brass | Tin |
| 12015869 | 0.80-0.50 | Tin Brass | Tin |
| 12020035 | 0.80-0.50 (2 Req'd.) | Tin Brass | Tin |
| 12052222 | 0.50-0.35 | Tin Brass | Tin |

### 630 Female Connectors Unsealed

| # Cavities | Connector | Color | Material | TPA |
|---|---|---|---|---|
| 2 | 12129939 | Black | PA66 HS IM | 12129940 |
| 4 | 12015664 | Black | PA66 HS IM | – |

**NOTE:** Specifications in this catalog are for general reference only and are subject to change without notice. To verify product information, please contact a Delphi representative.

# 630

## Unsealed System Application Information

CABLE RANGE (mm²): ..... 0.35-5.0

CURRENT RANGE (AMPS): ..... 0-46

TEMP RANGE °C: ..... -40 to 125

RESISTANCE: ..... <10mΩ@20mV

VOLTAGE DROP: ..... <3.0mV/amp

CENTERLINE SPACING (mm): ..... 8.5

BLADE WIDTH (mm): ..... 6.3

### 630 Series Terminals – Tin Plated

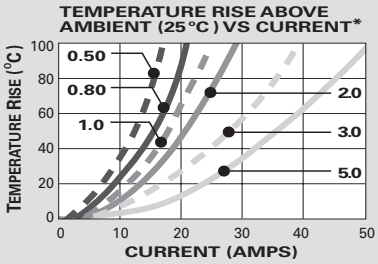


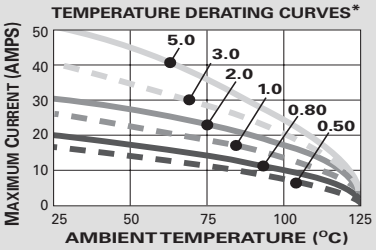


*The test data are based on single circuits in free space and were generated using a "Lumped Resistance" model. This model does not account for all of the variables that would be present in an actual application. For actual product performance, contact your regional support representative.

Male Connector

Male Terminal

TPA
(Terminal Position Assurance)

### 630 Male Connectors Unsealed

| # Cavities | Connector | Color | Material | TPA |
|---|---|---|---|---|
| 2 | 12129938 | Black | PA66 HS IM | 12129940 |
| 4 | 12052623 | Black | PA66 HS IM | – |

### 630 Male Terminals Unsealed

| Part # | Cable Range (mm²) | Material | Plating |
|---|---|---|---|
| 12066493 | 5.0-3.0 | Tin Brass | Tin over Copper |
| 12052826 | 3.0 | Tin Brass | Tin over Copper |
| 12020365 | 3.0 (2 Req'd.) | Tin Brass | Tin over Copper |
| 12020126 | 2.0-1.0 | Tin Brass | Tin over Copper |
| 12020125 | 0.80-0.50 | Tin Brass | Tin over Copper |
| 12033972 | 0.80-0.50 (2 Req'd.) | Tin Brass | Tin over Copper |
| 12066454 | 0.50-0.35 | Tin Brass | Tin over Copper |

**SECTION NOTES:**

- Due to rigid to tolerances of connector cavities, it is critical to meet all crimp dimensions as specified.

**NOTE:** Specifications in this catalog are for general reference only and are subject to change without notice. To verify product information, please contact a Delphi representative.

# 630

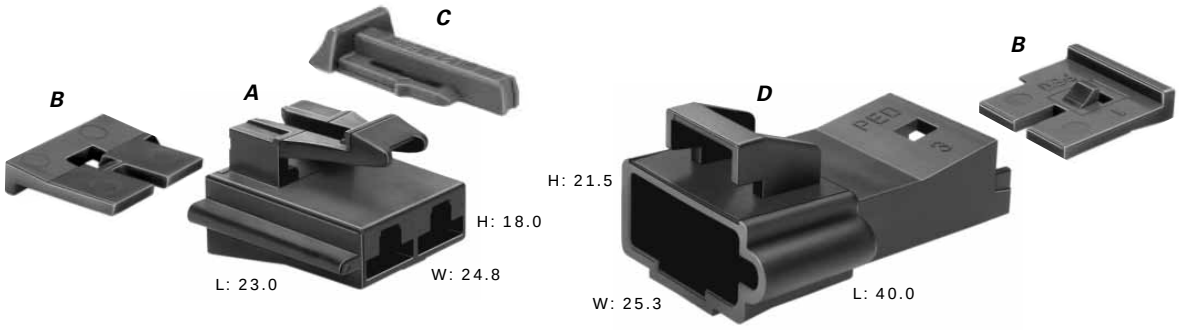


Total Mated Length: 53.0mm

### A. Part No: 12129939

| | |
|---|---|
| Description: | Connector 2F |
| Size: | 23.0L x 18.0H x 24.8W |
| Color: | Black |
| Material: | PA66 HS IM |
| Terminals: | See Page 2.52 |

### B. Part No: 12129940

| | |
|---|---|
| Description: | TPA |
| Number Req: | 2 |
| Color: | Blue |
| Material: | PA66 HS IM |

### C. Part No: 12052834

| | |
|---|---|
| Description: | CPA |
| Color: | Green |
| Material: | PP |

### D. Part No: 12129938

| | |
|---|---|
| Description: | Connector 2M (Clip Slot-Self Locking) |
| Size: | 40.0L x 21.5H x 25.3W |
| Color: | Black |
| Material: | PA66 HS IM |
| Terminals: | See Page 2.53 |

**NOTE:** Specifications in this catalog are for general reference only and are subject to change without notice. To verify product information, please contact a Delphi representative.

# 630

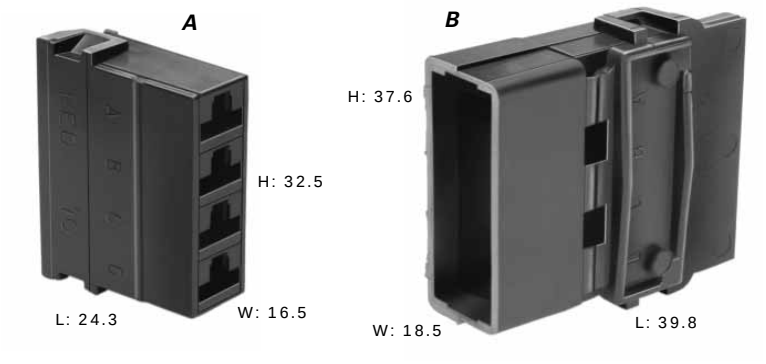


Total Mated Length: 53.1mm

## A. Part No: 12015664*

| | |
|---|---|
| Description: | Connector 4F |
| Size: | 24.3L x 32.5H x 16.5W |
| Color: | Black |
| Material: | PA66 HS IM |
| Terminals: | See Page 2.52 |

*Hinged secondary lock.

## B. Part No: 12052623*

| | |
|---|---|
| Description: | Connector 4M |
| Size: | 39.8L x 37.6H x 18.5W |
| Color: | Black |
| Material: | PA66 HS IM |
| Terminals: | See Page 2.53 |

*Hinged secondary lock.

**NOTE:** Specifications in this catalog are for general reference only and are subject to change without notice. To verify product information, please contact a Delphi representative.

# 630

## Cross Sectional View

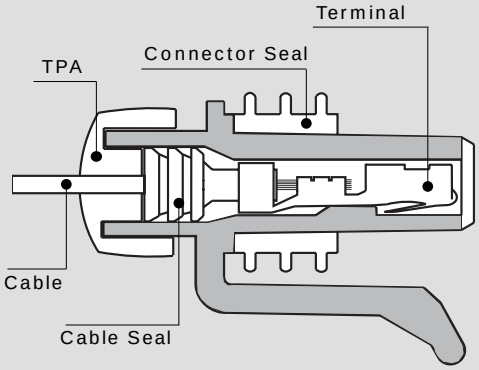


**Female Connector Assembly**

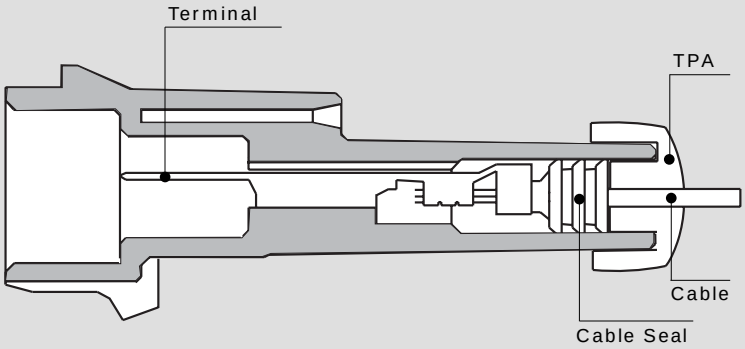


**Male Connector**

| 630 Female Terminals Sealed | | | |
|---|---|---|---|
| **Part #** | **Cable Range (mm²)** | **Material** | **Plating** |
| 12052456 | 5.0-3.0 | Tin Brass | Tin |
| 12052455 | 2.0-1.0 | Tin Brass | Tin |
| 12052457 | 0.80-0.50 | Tin Brass | Tin |

| 630 Female Pull-to-Seat Terminals | | | |
|---|---|---|---|
| **Part #** | **Cable Range (mm²)** | **Material** | **Plating** |
| 12033997 | 3.0 | Tin Brass | Tin |
| 12066614 | 2.0-1.0 | Tin Brass | Tin |
| 12020156 | 0.80-0.50 | Tin Brass | Tin |

| 630 Metri-Pack Cable Seals | | | | |
|---|---|---|---|---|
| **Reel Part #** | **Loose Part #** | **Cable Dia.** | **Material** | **Color** |
| 12059257 | 15324993 | 5.15-4.40 | Silicone | Green |
| 12059260 | 15324996 | 4.50-3.61 | Silicone | Blue |
| 12059258 | 15324994 | 3.75-2.81 | Silicone | Lt. Gray |
| 12059259 | 15324995 | 2.85-2.01 | Silicone | Dk. Red |
| 12077760 | 15324997 | 2.40-1.65 | Silicone | Tan |

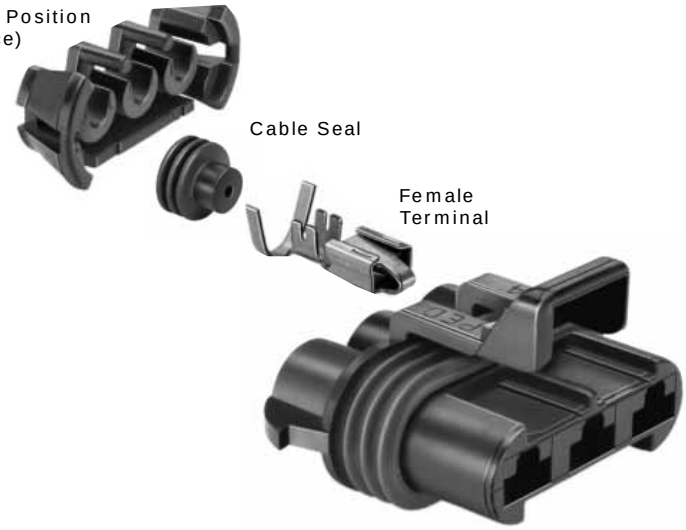


**Female Connector Assembly**

| 630 Female Connector Assembly Sealed | | | | |
|---|---|---|---|---|
| **# Cavities** | **Conn. Asm.** | **Color** | **Material** | **TPA** |
| 3 | 12124685 | Black | PBT 30% GF | 12045699 |

**NOTE:** Specifications in this catalog are for general reference only and are subject to change without notice. To verify product information, please contact a Delphi representative.

# 630

## Sealed System Application Information

CABLE RANGE (mm²): ..... 0.50-5.0

CURRENT RANGE (AMPS): ..... 0-46

TEMP RANGE °C: ..... -40 to 125

RESISTANCE: ..... <10mΩ@20mV

VOLTAGE DROP: ..... <3.0mV/amp

CENTERLINE SPACING (mm): ..... 10.8

BLADE WIDTH (mm): ..... 6.3

### 630 Series Terminals – Tin Plated

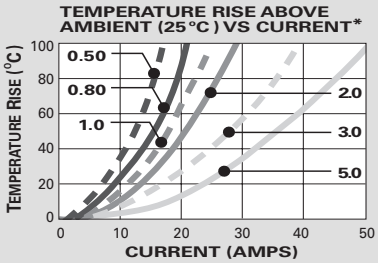


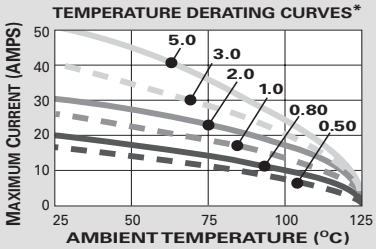


*The test data are based on single circuits in free space and were generated using a "Lumped Resistance" model. This model does not account for all of the variables that would be present in an actual application. For actual product performance, contact your regional support representative.

**Male Connector**

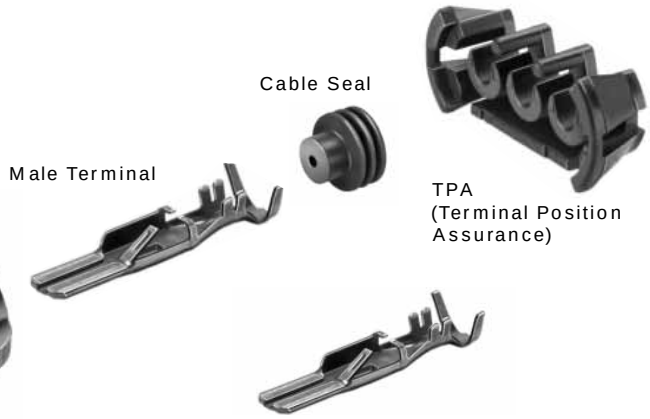


### 630 Male Terminals Sealed

| Part # | Cable Range (mm²) | Material | Plating |
|---|---|---|---|
| 12064736 | 5.0 | Tin Brass | Tin |
| 12064737 | 3.0 | Tin Brass | Tin |
| 12064735 | 2.0-1.0 | Tin Brass | Tin |
| 12064734 | 0.80-0.50 | Tin Brass | Tin |

### 630 Male Connector Sealed

| # Cavities | Connector | Color | Material | TPA |
|---|---|---|---|---|
| 3 | 15358681 | Black | PBT 30% GF | 12045699 |

### 630 Metri-Pack Cavity Plug*

| Part # | Cavity Inside Diameter | Material | Color |
|---|---|---|---|
| 12059255 | 9.8mm | Silicone | Green |

*Cavity plugs seal unused female and male cavities.

**SECTION NOTES:**

- Due to rigid tolerances of connector cavities, it is critical to meet all crimp dimensions as specified.

**NOTE:** Specifications in this catalog are for general reference only and are subject to change without notice. To verify product information, please contact a Delphi representative.

# 630

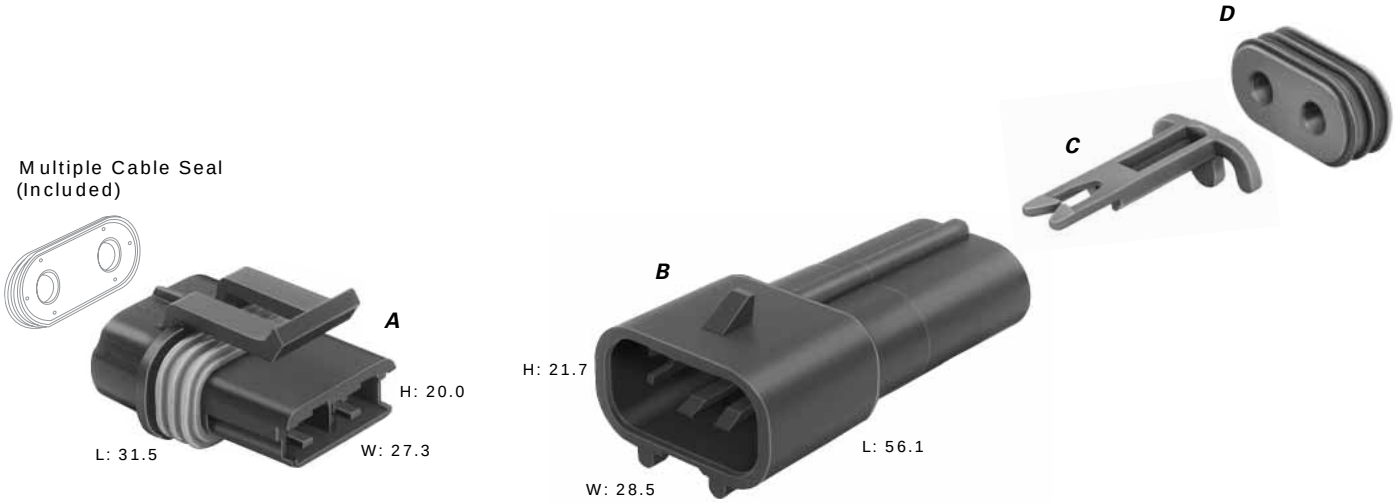


Total Mated Length: 67.5mm

### A. Part No: 12033769

| | |
|---|---|
| Description: | Connector Assembly 2F |
| Size: | 31.5L x 20.0H x 27.3W |
| Color: | Black |
| Material: | PA66 HS IM |
| Terminals: | See Page 2.56, Pull-To-Seat Terminals |

### B. Part No: 12034269

| | |
|---|---|
| Description: | Connector 2M |
| Size: | 56.1L x 21.7H x 28.5W |
| Color: | Black |
| Material: | PA66 HS IM |
| Terminals: | See Page 2.57 |

### C. Part No: 12034363

| | |
|---|---|
| Description: | TPA |
| Color: | Md. Gray |
| Material: | PA66 HS IM |

### D. Part No: 12034364

| | |
|---|---|
| Description: | Seal |
| Color: | Gray |
| Material: | Silicone |

**NOTE:** Specifications in this catalog are for general reference only and are subject to change without notice. To verify product information, please contact a Delphi representative.

# 630

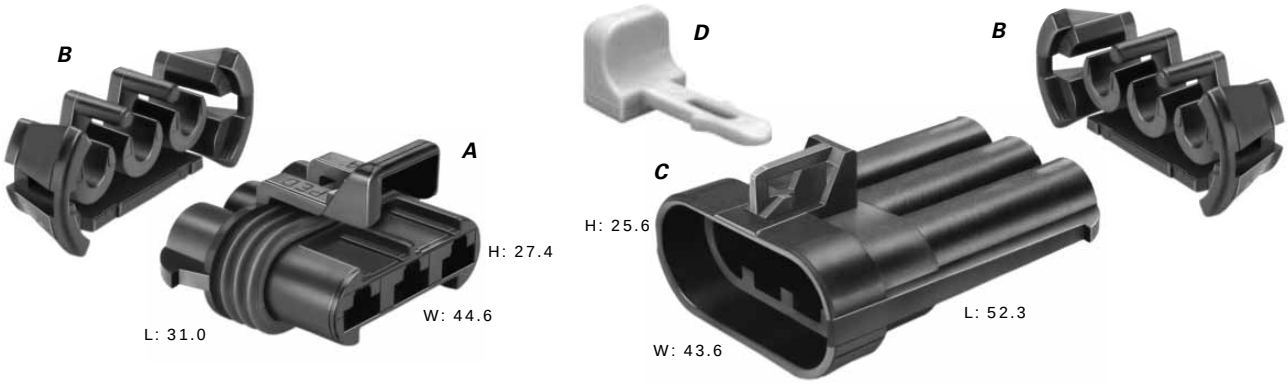


Total Mated Length: 69.5mm

### A. Part No: 12124685

| | |
|---|---|
| Description: | Connector Assembly 3F |
| Size: | 31.0L x 27.4H x 44.6W |
| Color: | Black |
| Material: | PBT 30% GF |
| Terminals: | See Page 2.56 |
| Seals/Plugs: | See Page 2.56, 2.57 |

### B. Part No: 12045699

| | |
|---|---|
| Description: | TPA |
| Number Req: | 2 |
| Color: | Black |
| Material: | PA66 HS IM |

### C. Part No: 15358681

| | |
|---|---|
| Description: | Connector 3M (Clip Slot) |
| Size: | 52.3L x 25.6H x 43.6W |
| Color: | Black |
| Material: | PBT 30% GF |
| Terminals: | See Page 2.57 |
| Seals/Plugs: | See Page 2.56, 2.57 |

### D. Part No: 12020833

| | |
|---|---|
| Description: | CPA |
| Color: | Gray |
| Material: | PBT |

**NOTE:** Specifications in this catalog are for general reference only and are subject to change without notice. To verify product information, please contact a Delphi representative.

# 800

Available in device and in-line connections for vehicle applications, Metri-Pack 800 Series connectors can meet or exceed the requirements for most marine, appliance, and industrial control applications.

Ideally suited for high current applications that do not require environmental protection, Metri-Pack 800 Series products are extremely rugged and versatile.

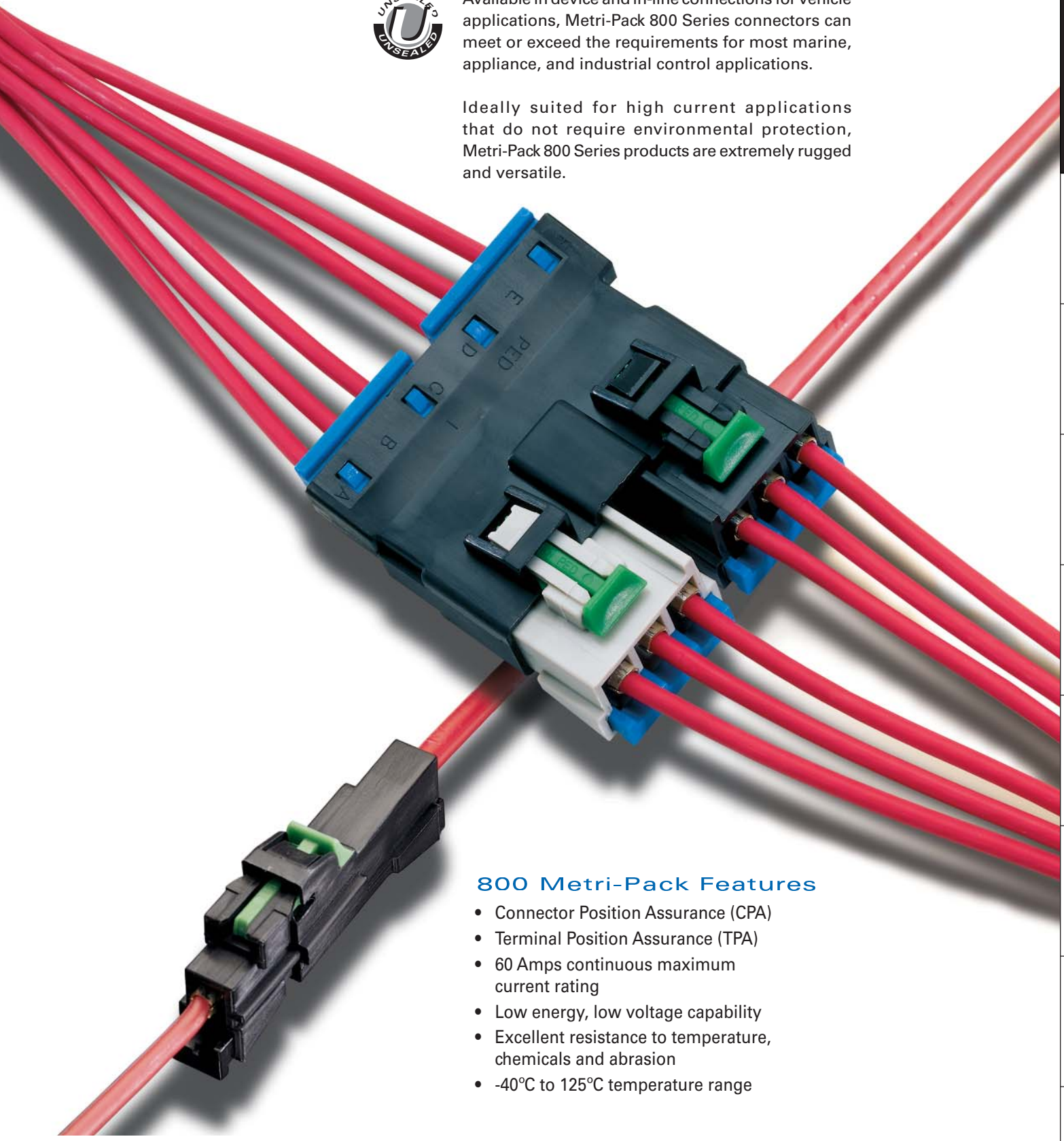

## 800 Metri-Pack Features

- Connector Position Assurance (CPA)
- Terminal Position Assurance (TPA)
- 60 Amps continuous maximum current rating
- Low energy, low voltage capability
- Excellent resistance to temperature, chemicals and abrasion
- -40°C to 125°C temperature range

# 800

## Cross Sectional View

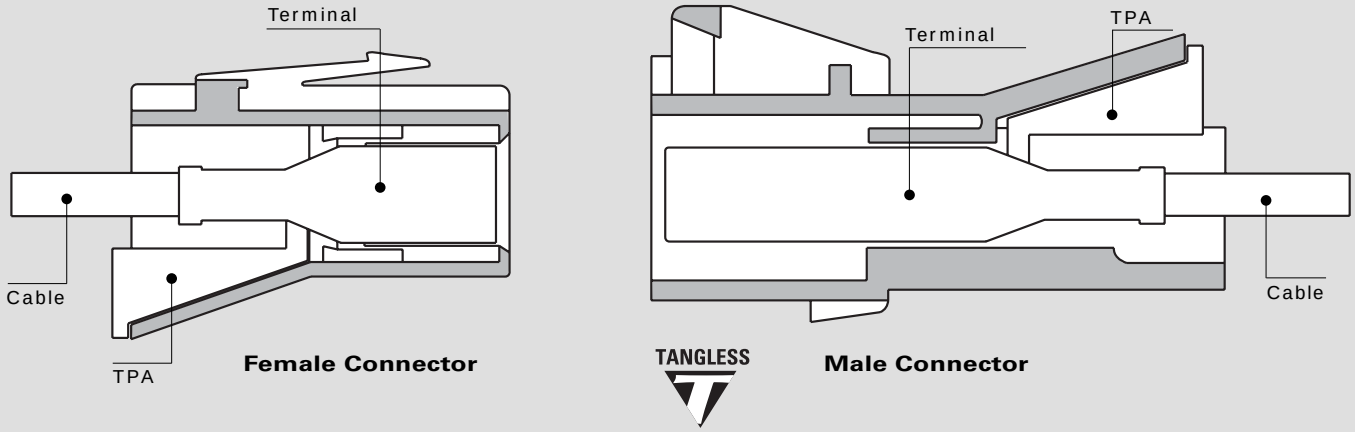


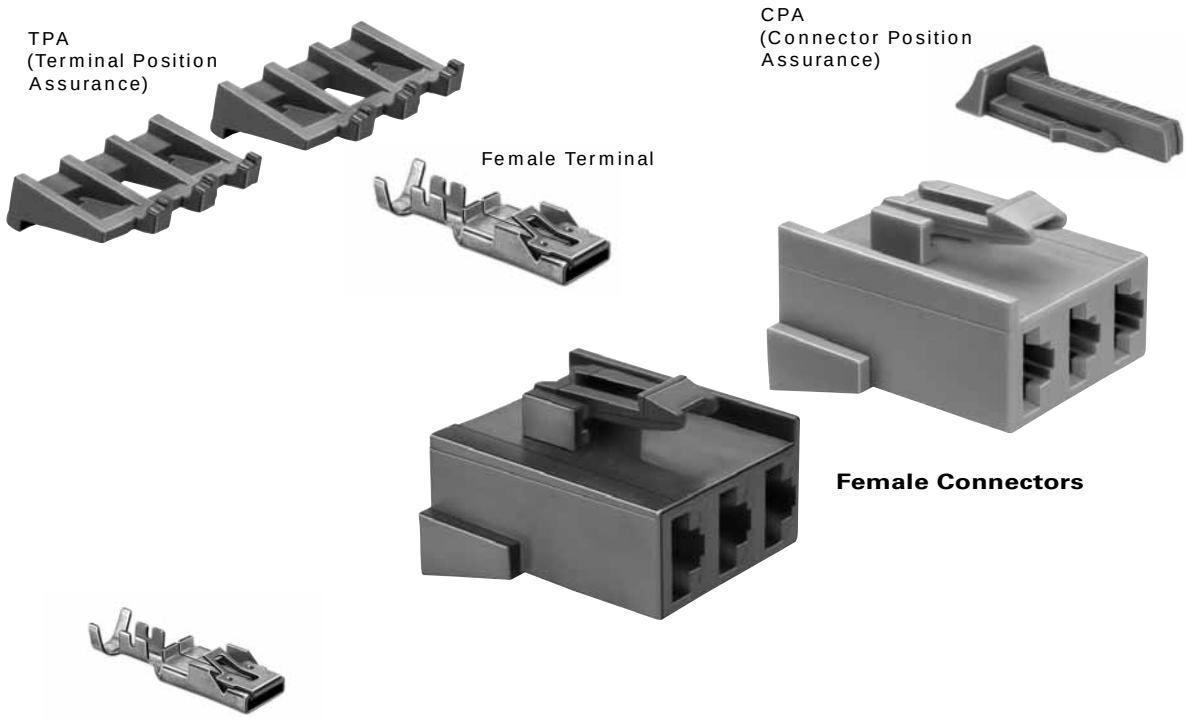


| 800 Female Terminals Unsealed | | | |
|---|---|---|---|
| **Part #** | **Cable Range (mm²)** | **Material** | **Plating** |
| 12110127 | 5.0 | Tin Brass | Silver/Nickel |
| 12092445 | 5.0 (2 Req'd.) | Tin Brass | Silver/Nickel |
| 12092444 | 3.0 (2 Req'd.) | Tin Brass | Silver/Nickel |
| 12065916 | 3.0-2.0 | Tin Brass | Silver/Nickel |

| 800 Female Connectors Unsealed | | | | |
|---|---|---|---|---|
| **# Cavities** | **Connector** | **Color** | **Material** | **TPA** |
| 1way: 1 | 12160893 | Black | PA6 | 12160895 |
| 6way: 3 | 12092399 | Lt. Gray | PA66 HS IM | 12092401 |
| 6way: 3 | 12092400 | Black | PA66 HS IM | 12092401 |

**NOTE:** Specifications in this catalog are for general reference only and are subject to change without notice. To verify product information, please contact a Delphi representative.

# 800

## Unsealed System Application Information

CABLE RANGE (mm²): ..... 2.0-5.0

CURRENT RANGE (AMPS): ..... 0-60

TEMP RANGE °C: ..... -40 to 125

RESISTANCE: ..... <10mΩ@20mV

VOLTAGE DROP: ..... <3.0mV/amp

CENTERLINE SPACING (mm): ..... 10.3

BLADE WIDTH (mm): ..... 8.0

### 800 Series Terminals – Tin Plated

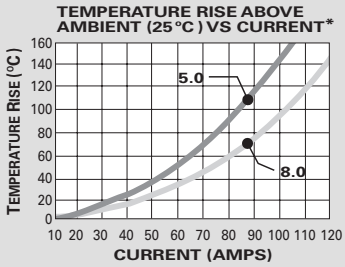


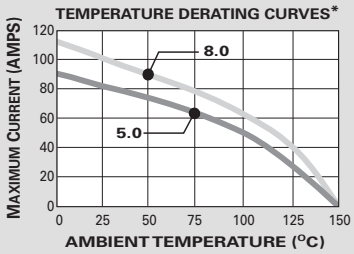


*The test data are based on single circuits in free space and were generated using a "Lumped Resistance" model. This model does not account for all of the variables that would be present in an actual application. For actual product performance, contact your regional support representative.

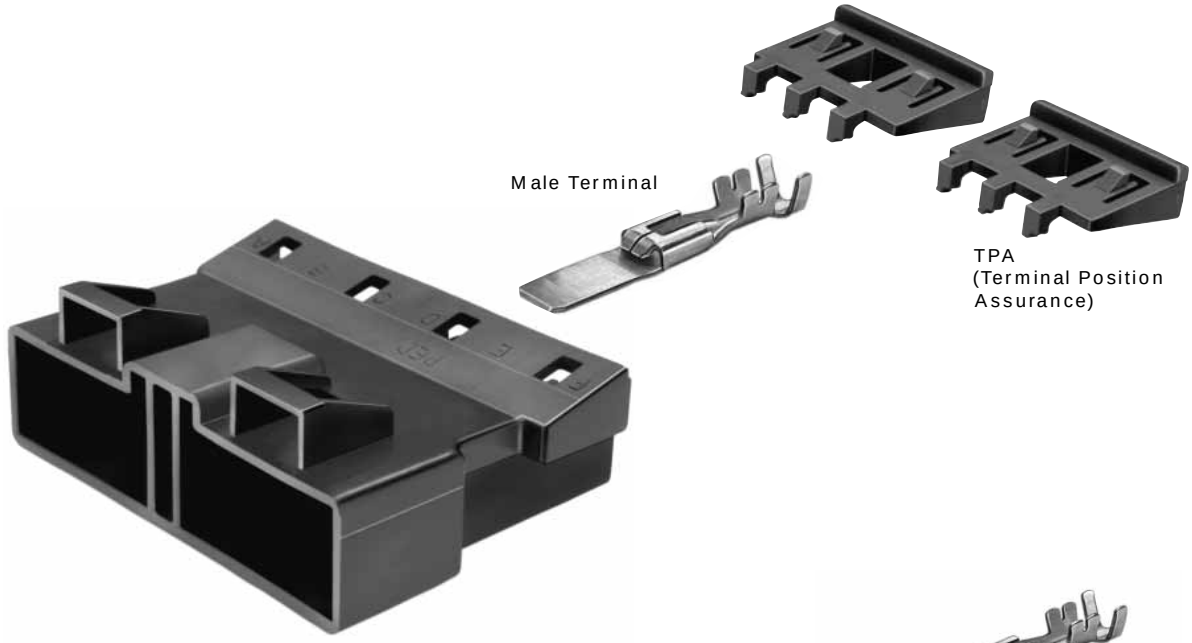


**Male Connector**

TANGLESS

### 800 Male Connectors Unsealed

| # Cavities | Connector | Color | Material | TPA |
|---|---|---|---|---|
| 1 | 12160894 | Black | PA6 | 12160895 |
| 6 | 12110698 | Black | PA66 HS IM | 12092401 |

TANGLESS

### 800 Male Tangless Terminals Unsealed

| Part # | Cable Range (mm²) | Material | Plating |
|---|---|---|---|
| 12110700 | 5.0 | Tin Brass | Silver/Nickel |

**SECTION NOTES:**

- Due to rigid tolerances of connector cavities, it is critical to meet all crimp dimensions as specified.

**NOTE:** Specifications in this catalog are for general reference only and are subject to change without notice. To verify product information, please contact a Delphi representative.

# 800

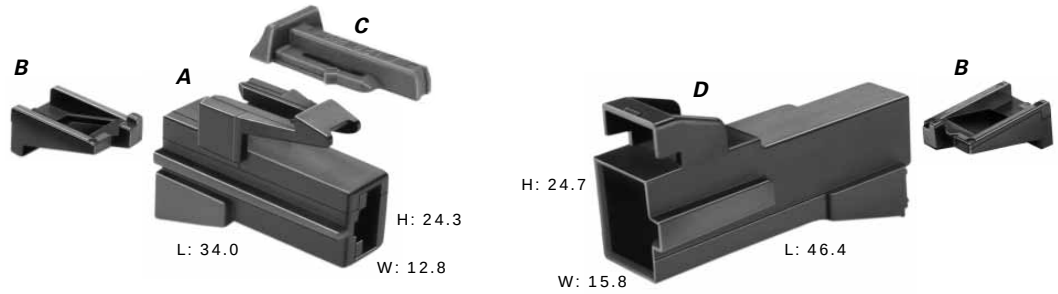


TANGLESS

Total Mated Length: 65.7mm

## A. Part No: 12160893

| | |
|---|---|
| Description: | Connector 1F |
| Size: | 34.0L x 24.3H x 12.8W |
| Color: | Black |
| Material: | PA6 |
| Terminals: | See Page 2.62 |

## B. Part No: 12160895

| | |
|---|---|
| Description: | TPA |
| Number Req: | 2 |
| Color: | Md. Gray |
| Material: | PA6 |

## C. Part No: 12052834

| | |
|---|---|
| Description: | CPA |
| Color: | Green |
| Material: | PP |

## D. Part No: 12160894

| | |
|---|---|
| Description: | Connector 1M<br>(Clip Slot–Self Locking) |
| Size: | 46.4L x 24.7H x 15.8W |
| Color: | Black |
| Material: | PA6 |
| Terminals: | See Page 2.63 |

**NOTE:** Specifications in this catalog are for general reference only and are subject to change without notice. To verify product information, please contact a Delphi representative.

# 800

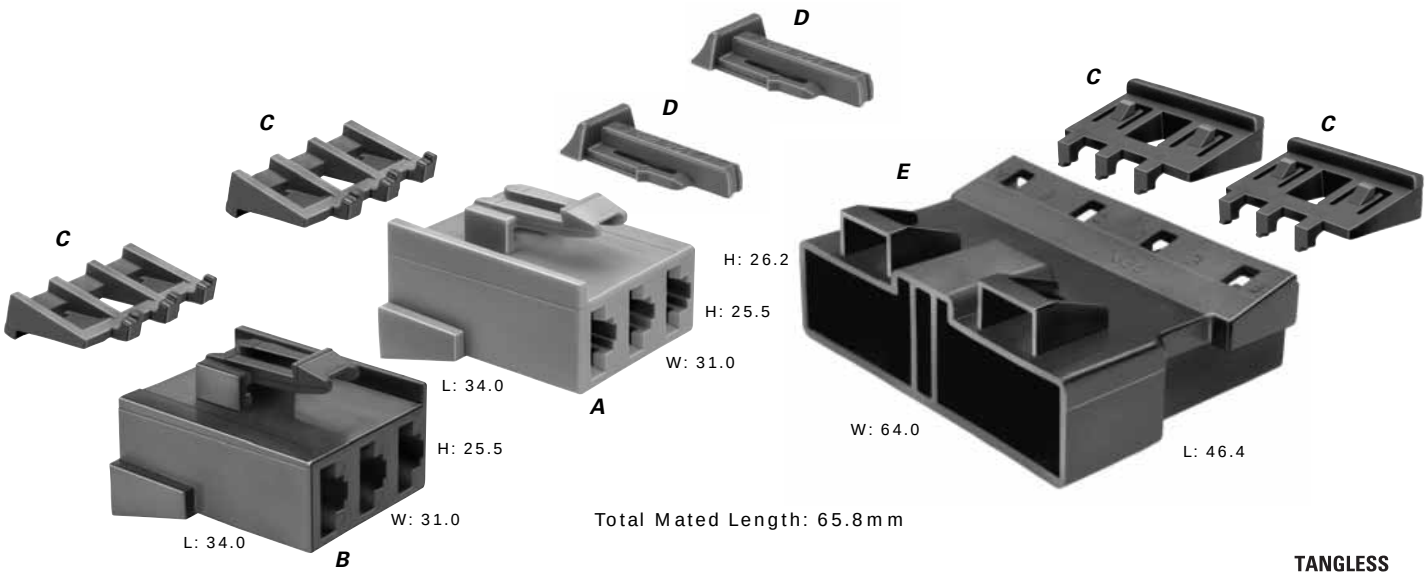


TANGLESS

### A. Part No: 12092399

| | |
|---|---|
| Description: | Connector 3F |
| Size: | 34.0L x 25.5H x 31.0W |
| Color: | Lt. Gray |
| Material: | PA66 HS IM |
| Terminals: | See Page 2.62 |

### B. Part No: 12092400

| | |
|---|---|
| Description: | Connector 3F |
| Size: | 34.0L x 25.5H x 31.0W |
| Color: | Black |
| Material: | PA66 HS IM |
| Terminals: | See Page 2.62 |

### C. Part No: 12092401

| | |
|---|---|
| Description: | TPA |
| Number Req: | 4 |
| Color: | Blue |
| Material: | PA66 HS IM |

### D. Part No: 12052834

| | |
|---|---|
| Description: | CPA |
| Number Req: | 2 |
| Color: | Green |
| Material: | PP |

### E. Part No: 12110698

| | |
|---|---|
| Description: | Connector 6M (Clip Slot–Self Locking) |
| Size: | 46.4L x 26.2H x 64.0W |
| Color: | Black |
| Material: | PA66 HS IM |
| Terminals: | See Page 2.63 |

**NOTE:** Specifications in this catalog are for general reference only and are subject to change without notice. To verify product information, please contact a Delphi representative.

# Mixed

Available in device and in-line connections for vehicle applications, Metri-Pack Mixed Series connectors can meet or exceed the requirements for most marine, appliance, and industrial control applications.

Ideally suited for combination low energy and high current applications that do not require environmental protection, Metri-Pack Mixed Series products are extremely versatile.

Available in device and in-line connections for underhood vehicle applications, Metri-Pack Mixed Series sealed connectors can meet or exceed the requirements for most marine, appliance, and industrial control applications.

Utilizing triple-rib peripheral silicone rubber seals, Metri-Pack Mixed Series sealed systems are ideally suited for combination, low-energy electronic, and high current applications that require protection from environmental hazards.

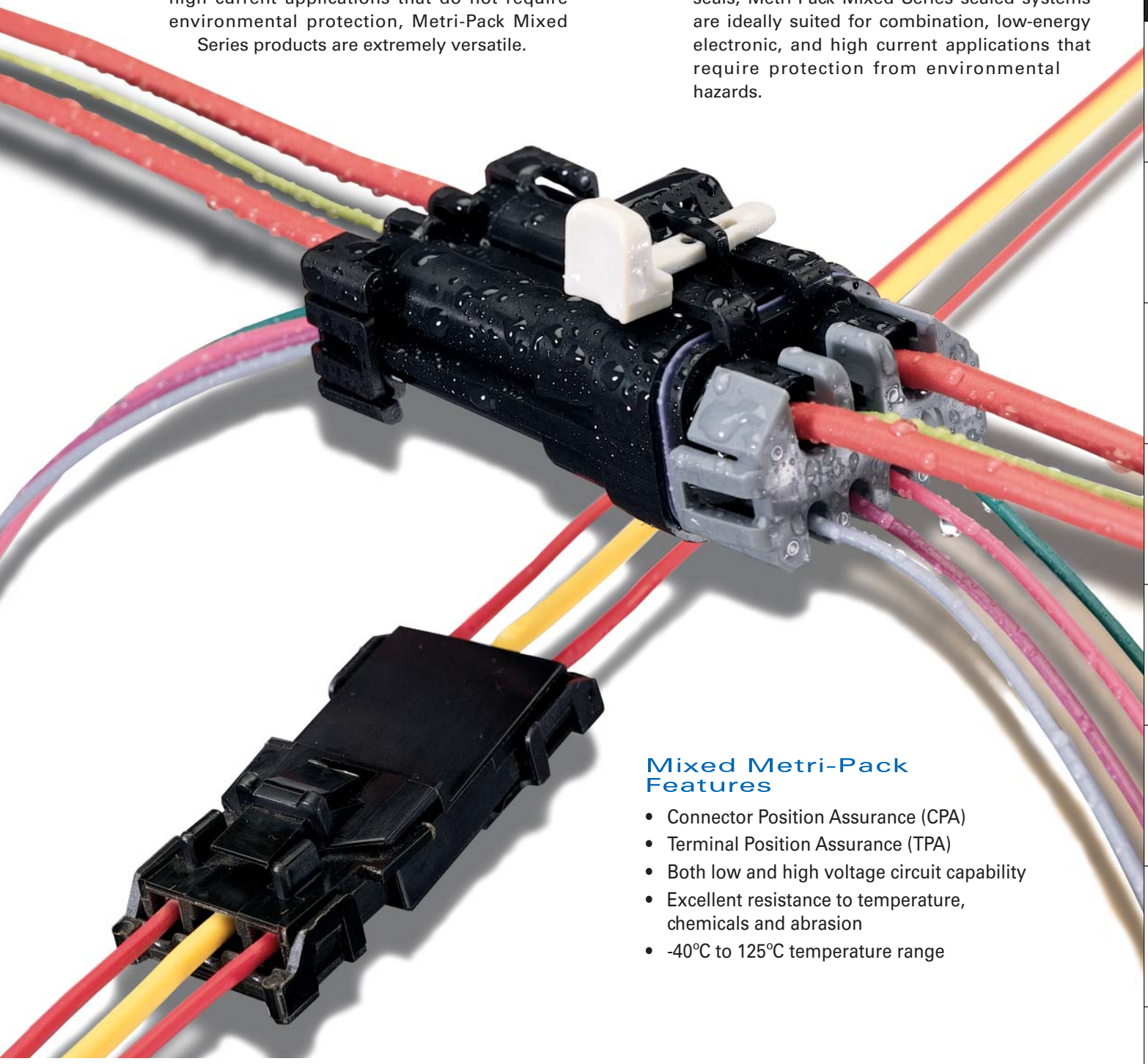

## Mixed Metri-Pack Features

- Connector Position Assurance (CPA)
- Terminal Position Assurance (TPA)
- Both low and high voltage circuit capability
- Excellent resistance to temperature, chemicals and abrasion
- -40°C to 125°C temperature range

# Mixed

## Unsealed System Application Information

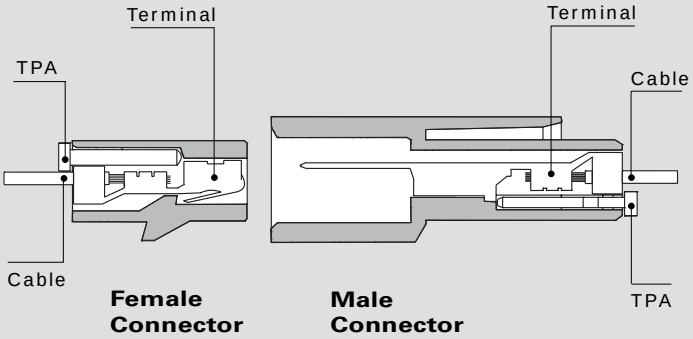


### 280 Series Terminals – Tin Plated

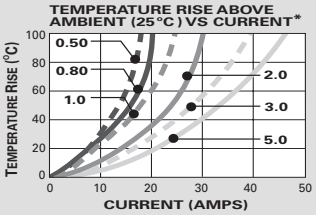


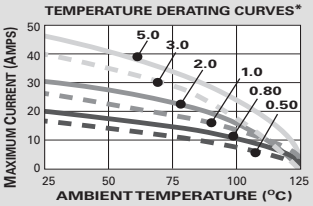


CABLE RANGE (mm²): ..... 0.35-5.0
CURRENT RANGE (AMPS): ..... 0-30
TEMP RANGE °C: ..... -40 to 125
RESISTANCE: ..... <10mΩ@20mV

VOLTAGE DROP: ..... <3.0mV/amp
CENTERLINE SPACING (mm): .....
..... Connector Dependent
BLADE WIDTH (mm): ..... 2.8

*The test data are based on single circuits in free space and were generated using a "Lumped Resistance" model. This model does not account for all of the variables that would be present in an actual application. For actual product performance, contact your regional support representative.

### 280 Female Terminals Unsealed

| Part # | Cable Range (mm²) | Material | Plating |
|---|---|---|---|
| 12015858 | 5.0-3.0 | Tin Brass | Tin |
| 12129494 | 3.0-2.0 | Tin Brass | Tin |
| 12066214 | 2.0-1.0 | Tin Brass | Tin |
| 12034046 | 0.80-0.50 | Tin Brass | Tin |
| 12052217 | 0.50-0.35 | Tin Brass | Tin |
| 12162597* | 3.0-2.0 | Tin Brass | Tin |
| 12162595* | 1.0-0.80 | Tin Brass | Tin |
| 12162596* | 0.50-0.35 | Tin Brass | Tin |

*Thin Stock—Electrical current restrictions may apply.

### 480 Female Terminals Unsealed

| Part # | Cable Range (mm²) | Material | Plating |
|---|---|---|---|
| 12084595 | 5.0-3.0 | Tin Brass | Tin |
| 12052221 | 3.0 | Tin Brass | Tin |
| 12124304 | 2.0-1.0 | Tin Brass | Tin |
| 12015860 | 0.80-0.50 | Tin Brass | Tin |
| 12052219 | 0.50-0.35 | Tin Brass | Tin |
| 12020366 | 2.0-1.0 (1 Req'd.) | Tin Brass | Tin |
| | 0.80-0.50 (1 Req'd.) | | |

### 630 Female Terminals Unsealed

| Part # | Cable Range (mm²) | Material | Plating |
|---|---|---|---|
| 12084590 | 5.0-3.0 | Tin Brass | Tin |
| 12052224 | 3.0 | Tin Brass | Tin |
| 12084596 | 5.0-3.0 (2 Req'd.) | Tin Brass | Tin |
| 12015870 | 2.0-1.0 | Tin Brass | Tin |
| 12015869 | 0.80-0.50 | Tin Brass | Tin |
| 12020035 | 0.80-0.50 (2 Req'd.) | Tin Brass | Tin |
| 12052222 | 0.50-0.35 | Tin Brass | Tin |

Female Terminals

**Female Connector**

### Mixed Metri-Pack Female Connector Unsealed

| # Cavities | Connector | Color | Material |
|---|---|---|---|
| 3 | 12020014 | Black | PA66 HS IM |

**NOTE:** Specifications in this catalog are for general reference only and are subject to change without notice. To verify product information, please contact a Delphi representative.

# Mixed

## Unsealed System Application Information

### 480 Series Terminals – Tin Plated

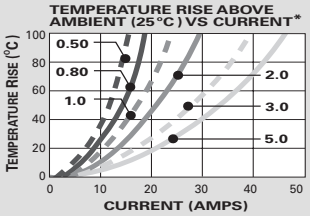


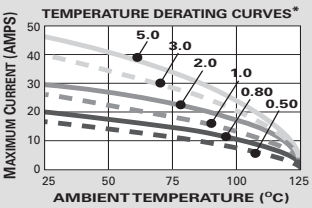


CABLE RANGE (mm²): ..... 0.35-5.0
CURRENT RANGE (AMPS): ..... 0-42
TEMP RANGE °C: ..... -40 to 125
RESISTANCE: ..... <10mΩ@20mV

VOLTAGE DROP: ..... <3.0mV/amp
CENTERLINE SPACING (mm): .....
..... Connector Dependent
BLADE WIDTH (mm): ..... 4.8

### 630 Series Terminals – Tin Plated

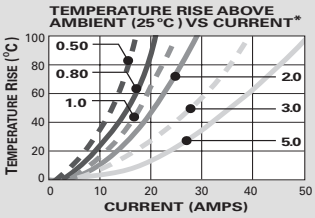


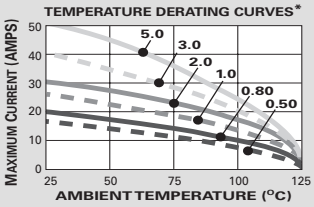


CABLE RANGE (mm²): ..... 0.35-5.0
CURRENT RANGE (AMPS): ..... 0-46
TEMP RANGE °C: ..... -40 to 125
RESISTANCE: ..... <10mΩ@20mV

VOLTAGE DROP: ..... <3.0mV/amp
CENTERLINE SPACING (mm): .....
..... Connector Dependent
BLADE WIDTH (mm): ..... 6.3

*The test data are based on single circuits in free space and were generated using a "Lumped Resistance" model. This model does not account for all of the variables that would be present in an actual application. For actual product performance, contact your regional support representative.

Male Terminals

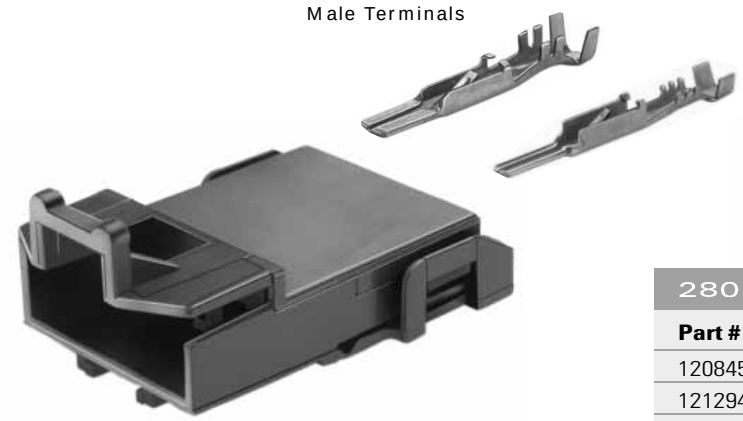

**Male Connector**

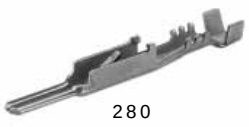

280

480

### 280 Male Terminals Unsealed

| Part # | Cable Range (mm²) | Material | Plating |
|---|---|---|---|
| 12084586 | 5.0-3.0 | Tin Brass | Tin |
| 12129498 | 3.0-2.0 | Tin Brass | Tin |
| 12020116 | 2.0-1.0 | Tin Brass | Tin |
| 12034047 | 0.80-0.50 | Tin Brass | Tin |
| 12066271 | 0.50-0.35 | Tin Brass | Tin |
| 12020782 | 0.35 (2 Req'd.) | Tin Brass | Tin |

### 480 Male Terminals Unsealed

| Part # | Cable Range (mm²) | Material | Plating |
|---|---|---|---|
| 12033820 | 5.0-3.0 | Tin Brass | Tin over Copper |
| 12052827 | 3.0 | Tin Brass | Tin over Copper |
| 12020120 | 2.0-1.0 | Tin Brass | Tin over Copper |
| 12020119 | 0.80-0.50 | Tin Brass | Tin over Copper |
| 12066269 | 0.50-0.35 | Tin Brass | Tin over Copper |
| 12020784 | 0.35 (2 Req'd.) | Tin Brass | Tin over Copper |

### Mixed Metri-Pack Male Connector Unsealed

| # Cavities | Connector | Color | Material |
|---|---|---|---|
| 3 | 12045681 | Black | PA66 HS IM |

**SECTION NOTES:**

- Due to rigid tolerances of connector cavities, it is critical to meet all crimp dimensions as specified.
- Female connections for device applications, see page 2.76.

**NOTE:** Specifications in this catalog are for general reference only and are subject to change without notice. To verify product information, please contact a Delphi representative.

# Mixed

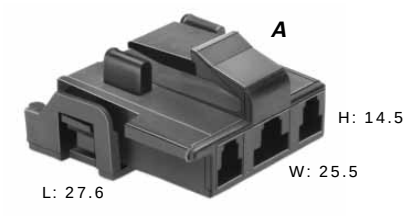


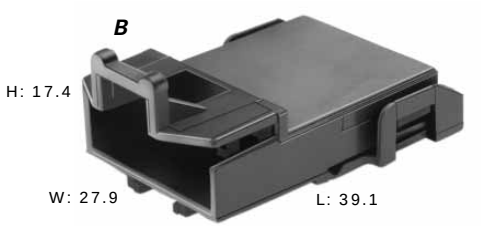


Total Mated Length: 55.6mm

### A. Part No: 12020014*

| | |
|---|---|
| Description: | Connector 3F |
| Size: | 27.6L x 14.5H x 25.5W |
| Color: | Black |
| Material: | PA66 HS IM |
| Terminals: | See Page 2.68 |

*Hinged secondary lock.

### B. Part No: 12045681*

| | |
|---|---|
| Description: | Connector 3M (Clip Slot) |
| Size: | 39.1L x 17.4H x 27.9W |
| Color: | Black |
| Material: | PA66 HS IM |
| Terminals: | See Page 2.69 |

*Hinged secondary lock.

**KEY:**

- ■ 280 SERIES
- ● 480 SERIES

Mixed connectors feature a combination of different terminal cavities, as indicated by the key.

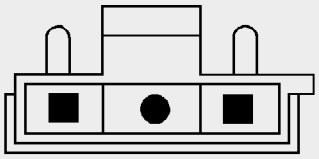

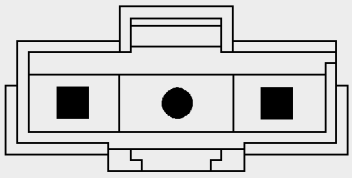

**NOTE:** Specifications in this catalog are for general reference only and are subject to change without notice. To verify product information, please contact a Delphi representative.

# Mixed

## Sealed System Application Information

### 150 Series Terminals – Tin Plated

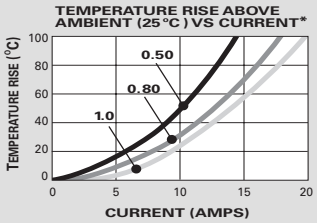


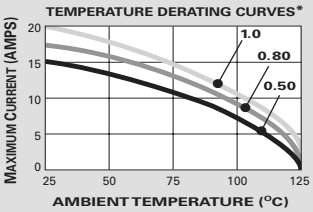


CABLE RANGE (mm²): ..... 0.35-1.0
CURRENT RANGE (AMPS): ..... 0-14
TEMP RANGE °C: ..... -40 to 125
RESISTANCE: ..... <10mΩ@20mV

VOLTAGE DROP: ... <10.0mV/amp
CENTERLINE SPACING (mm): .....
..... Connector Dependent
BLADE WIDTH (mm): ..... 1.5

### 280 Series Terminals – Tin Plated

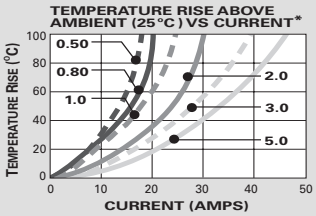


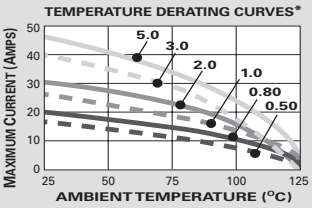


CABLE RANGE (mm²): ..... 0.35-5.0
CURRENT RANGE (AMPS): ..... 0-30
TEMP RANGE °C: ..... -40 to 125
RESISTANCE: ..... <10mΩ@20mV

VOLTAGE DROP: ..... <3.0mV/amp
CENTERLINE SPACING (mm): .....
..... Connector Dependent
BLADE WIDTH (mm): ..... 2.8

*The test data are based on single circuits in free space and were generated using a "Lumped Resistance" model. This model does not account for all of the variables that would be present in an actual application. For actual product performance, contact your regional support representative.

150

280

480

630

### 150 Female Terminals Sealed

| Part # | Cable Range (mm²) | Material | Plating |
|---|---|---|---|
| 12048074 | 1.0-0.80-0.50 | Silicon Bronze | Tin |
| 12084200 | 0.50-0.35 | Silicon Bronze | Tin |
| 12160223 | 1.0-0.80 | Beryllium Copper | Silver/Nickel |
| 12160222 | 0.50-0.35 | Beryllium Copper | Silver/Nickel |

### 280 Female Terminals Sealed

| Part # | Cable Range (mm²) | Material | Plating |
|---|---|---|---|
| 12077413 | 3.0 | Tin Brass | Tin |
| 12129493 | 3.0-2.0 | Tin Brass | Tin |
| 12077411 | 1.0-0.80-0.50 | Tin Brass | Tin |
| 12084201 | 0.50-0.35 | Tin Brass | Tin |

### 480 Female Terminals Sealed

| Part # | Cable Range (mm²) | Material | Plating |
|---|---|---|---|
| 12052139 | 5.0-3.0 | Tin Brass | Tin |
| 12048451 | 2.0-1.0 | Tin Brass | Tin |
| 12048450 | 0.80-0.50 | Tin Brass | Tin |

### 630 Female Terminals Sealed

| Part # | Cable Range (mm²) | Material | Plating |
|---|---|---|---|
| 12052456 | 5.0-3.0 | Tin Brass | Tin |
| 12052455 | 2.0-1.0 | Tin Brass | Tin |
| 12052457 | 0.80-0.50 | Tin Brass | Tin |

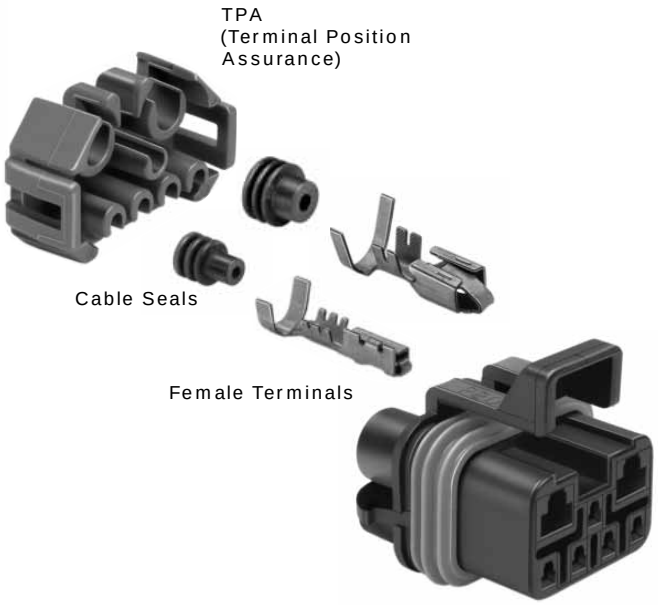


**Female Connector Assembly**

### Mixed Metri-Pack Female Connector Assembly Sealed

| # Cavities | Conn. Asm. | Color | Material | TPA |
|---|---|---|---|---|
| 7 | 12059472 | Black | PA66 HS IM | 12052486 |

**NOTE:** Specifications in this catalog are for general reference only and are subject to change without notice. To verify product information, please contact a Delphi representative.

# Mixed

## Sealed System Application Information

### 480 Series Terminals – Tin Plated

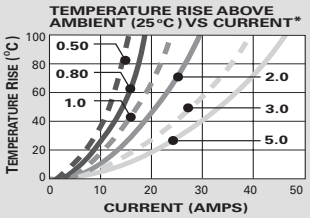


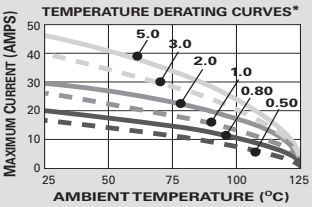


CABLE RANGE (mm²): ..... 0.35-5.0
CURRENT RANGE (AMPS): ..... 0-42
TEMP RANGE °C: ..... -40 to 125
RESISTANCE: ..... <10mΩ@20mV

VOLTAGE DROP: ..... <3.0mV/amp
CENTERLINE SPACING (mm): .....
..... Connector Dependent
BLADE WIDTH (mm): ..... 4.8

### 630 Series Terminals – Tin Plated

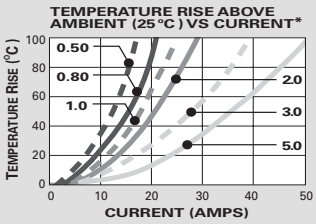


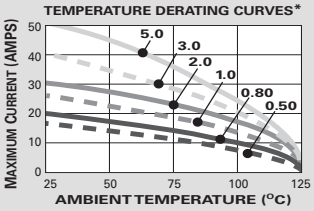


CABLE RANGE (mm²): ..... 0.35-5.0
CURRENT RANGE (AMPS): ..... 0-46
TEMP RANGE °C: ..... -40 to 125
RESISTANCE: ..... <10mΩ@20mV

VOLTAGE DROP: ..... <3.0mV/amp
CENTERLINE SPACING (mm): .....
..... Connector Dependent
BLADE WIDTH (mm): ..... 6.3

*The test data are based on single circuits in free space and were generated using a "Lumped Resistance" model. This model does not account for all of the variables that would be present in an actual application. For actual product performance, contact your regional support representative.

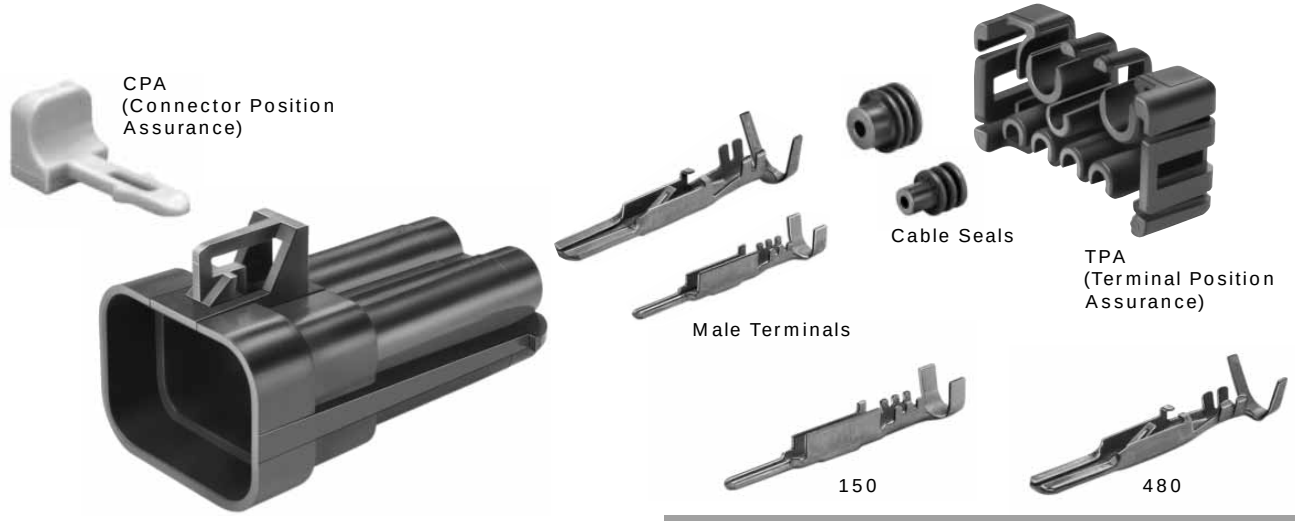


**Male Connector**

### 150 Male Terminals Sealed

| Part # | Cable Range (mm²) | Material | Plating |
|---|---|---|---|
| 12045773 | 0.80-0.50 | Tin Brass | Tin |
| 12077628 | 0.50-0.35 | Tin Brass | Tin |

### 480 Male Terminals Sealed

| Part # | Cable Range (mm²) | Material | Plating |
|---|---|---|---|
| 12052172 | 5.0 | Tin Brass | Tin |
| 12065197 | 3.0 | Tin Brass | Tin |
| 12065196 | 2.0-1.0 | Tin Brass | Tin |

### Mixed Metri-Pack Male Connector Sealed

| # Cavities | Connector | Color | Material | TPA |
|---|---|---|---|---|
| 7 | 12052200 | Black | PA66 HS IM | 12052199 |

**SECTION NOTES:**

- Due to rigid tolerances of connector cavities, it is critical to meet all crimp dimensions as specified.
- Female connections for device applications, see pages 2.77 and 2.78.

**NOTE:** Specifications in this catalog are for general reference only and are subject to change without notice. To verify product information, please contact a Delphi representative.

# Mixed

## Cross Sectional View

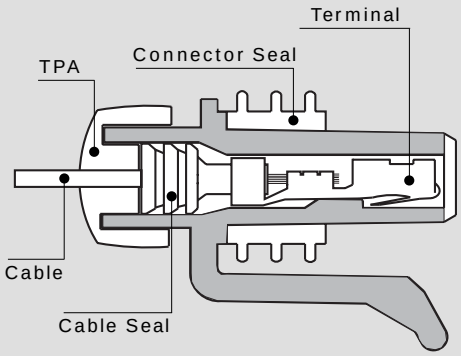


**Female Connector Assembly**

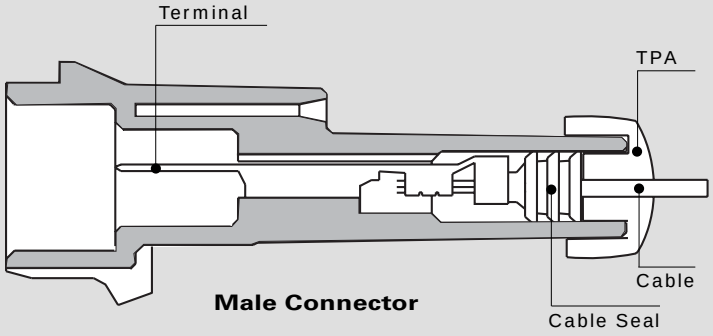


**Male Connector**

### 150 Metri-Pack Cable Seals

| Reel Part# | Loose Part# | Cable Dia. | Material | Color |
|---|---|---|---|---|
| 12052924 | 15324973 | 2.85-2.03 | Silicone | Dk. Red |
| 12089442 | 15324976 | 2.15-1.60 | Silicone | White |
| 12052925 | 15324974 | 1.70-1.29 | Silicone | Blue |
| 12124669 | 15324975 | 1.009-0.995 | Silicone | Tan |

### 280 Metri-Pack Cable Seals

| Reel Part # | Loose Part # | Cable Dia. | Material | Color |
|---|---|---|---|---|
| 12015360 | 15324981 | 4.30-3.45 | Silicone | Blue |
| 12015359 | 15324980 | 3.49-2.81 | Silicone | Gray |
| 12015284 | 15324982 | 2.85-2.03 | Silicone | Green |
| 12041352 | 15324984 | 2.42-2.03 | Silicone | Tan |
| 12089444 | 15324985 | 2.15-1.60 | Silicone | Purple |
| 12034365 | 15324983 | 1.70-1.29 | Silicone | Dk. Red |

### 480 Metri-Pack Cable Seals

| Reel Part # | Loose Part # | Cable Dia. | Material | Color |
|---|---|---|---|---|
| 12065703 | 15324987 | 5.16-4.40 | Silicone | Orange |
| 12052453 | 15324990 | 4.50-3.61 | Silicone | Purple |
| 12052452 | 15324989 | 3.76-2.81 | Silicone | Red |
| 12048433 | 15324988 | 2.85-2.01 | Silicone | White |
| 12052931 | 15324991 | 2.15-1.60 | Silicone | Yellow |
| 12162068 | 15324992 | 1.70-1.29 | Silicone | Pink |

### 630 Metri-Pack Cable Seals

| Reel Part # | Loose Part # | Cable Dia. | Material | Color |
|---|---|---|---|---|
| 12059257 | 15324993 | 5.15-4.40 | Silicone | Green |
| 12059260 | 15324996 | 4.50-3.61 | Silicone | Blue |
| 12059258 | 15324994 | 3.75-2.81 | Silicone | Lt. Gray |
| 12059259 | 15324995 | 2.85-2.01 | Silicone | Dk. Red |
| 12077760 | 15324997 | 2.40-1.65 | Silicone | Tan |

### 150 Metri-Pack Cavity Plug*

| Part # | Cavity Inside Diameter | Material | Color |
|---|---|---|---|
| 12059168 | 5.2mm | Silicone | Dk. Red |

*Cavity plugs seal unused female and male cavities.

### 280 Metri-Pack Cavity Plug*

| Part # | Cavity Inside Diameter | Material | Color |
|---|---|---|---|
| 12010300 | 6.7mm | Silicone | Green |

*Cavity plugs seal unused female and male cavities.

### 480 Metri-Pack Cavity Plug*

| Part # | Cavity Inside Diameter | Material | Color |
|---|---|---|---|
| 12066082 | 8.5mm | Silicone | Green |

*Cavity plugs seal unused female and male cavities.

### 630 Metri-Pack Cavity Plug*

| Part # | Cavity Inside Diameter | Material | Color |
|---|---|---|---|
| 12059255 | 9.8mm | Silicone | Green |

*Cavity plugs seal unused female and male cavities.

**NOTE:** Specifications in this catalog are for general reference only and are subject to change without notice. To verify product information, please contact a Delphi representative.

# Mixed

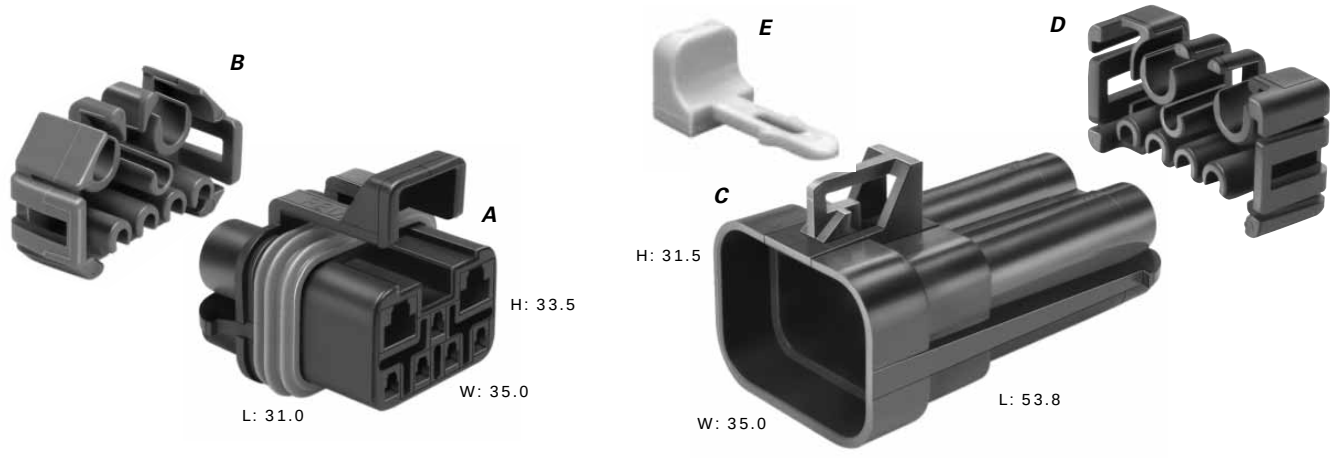


Total Mated Length: 69.3mm

### A. Part No: 12059472

| | |
|---|---|
| Description: | Connector Assembly 7F |
| Size: | 31.0L x 33.5H x 35.0W |
| Color: | Black |
| Material: | PA66 HS IM |
| Terminals: | See Page 2.72 |
| Seals/Plugs: | See Page 2.74 |

### B. Part No: 12052486

| | |
|---|---|
| Description: | TPA |
| Color: | Md. Gray |
| Material: | PA66 HS IM |

### C. Part No: 12052200

| | |
|---|---|
| Description: | Connector 7M (Clip Slot) |
| Size: | 53.8L x 31.5H x 35.0W |
| Color: | Black |
| Material: | PA66 HS IM |
| Terminals: | See Page 2.73 |
| Seals/Plugs: | See Page 2.74 |

### D. Part No: 12052199

| | |
|---|---|
| Description: | TPA |
| Color: | Black |
| Material: | PA6 |

### E. Part No: 12020833

| | |
|---|---|
| Description: | CPA |
| Color: | Gray |
| Material: | PBT |

**KEY:**

- ◪ 150 SERIES
- ● 480 SERIES

Mixed connectors feature a combination of different terminal cavities, as indicated by the key.

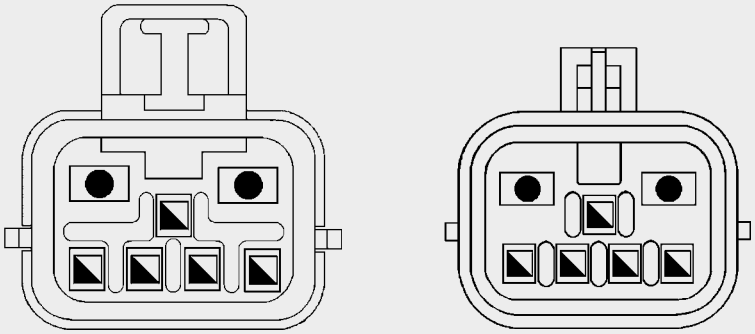

**NOTE:** Specifications in this catalog are for general reference only and are subject to change without notice. To verify product information, please contact a Delphi representative.

# Mixed Device Connections

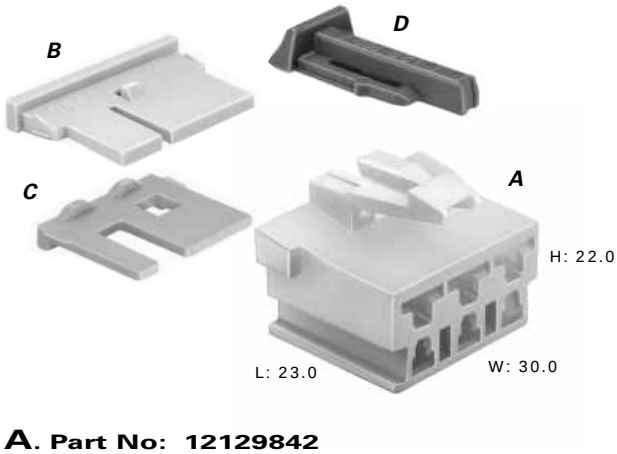


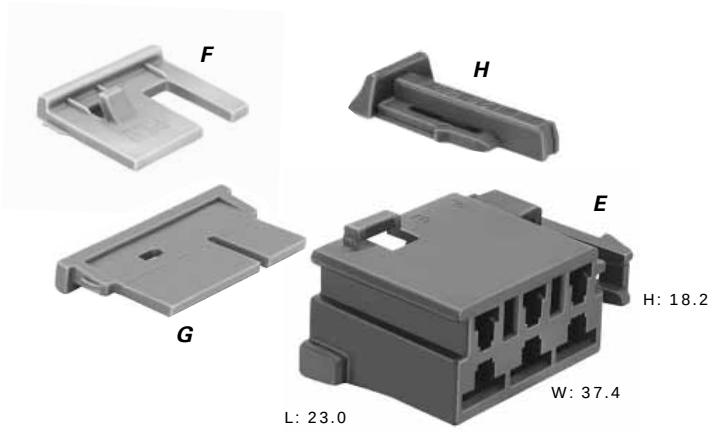


### A. Part No: 12129842

| | |
|---|---|
| Description: | Connector 6F |
| Size: | 23.0L x 22.0H x 30.0W |
| Color: | Natural |
| Material: | PA66 HS IM |
| Terminals: | See Page 2.68 |
| Typical App: | Switch |

### B. Part No: 12162301

| | |
|---|---|
| Description: | TPA |
| Color: | Lt. Gray |
| Material: | PA66 HS IM |

### C. Part No: 12162300

| | |
|---|---|
| Description: | TPA |
| Color: | Blue |
| Material: | PA66 HS IM |

### D. Part No: 12052834

| | |
|---|---|
| Description: | CPA |
| Color: | Green |
| Material: | PP |

### E. Part No: 12162229 (Black) 12110075 (Cream)*

| | |
|---|---|
| Description: | Connector 6F |
| Size: | 23.0L x 18.2H x 37.4W |
| Material: | PA66 HS IM |
| Terminals: | See Page 2.68 |
| Typical App: | Switch |

*Reversed locking feature.

### F. Part No: 12162300

| | |
|---|---|
| Description: | TPA |
| Color: | Blue |
| Material: | PA66 HS IM |

### G. Part No: 12162299

| | |
|---|---|
| Description: | TPA |
| Color: | Md. Gray |
| Material: | PA66 HS IM |

### H. Part No: 12052834

| | |
|---|---|
| Description: | CPA |
| Color: | Green |
| Material: | PP |

**KEY:**
- ■ 280 SERIES
- ▲ 630 SERIES

Mixed connectors feature a combination of different terminal cavities, as indicated by the key.

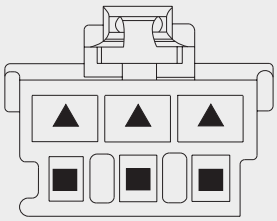

**KEY:**
- ■ 280 SERIES
- ▲ 630 SERIES

Mixed connectors feature a combination of different terminal cavities, as indicated by the key.

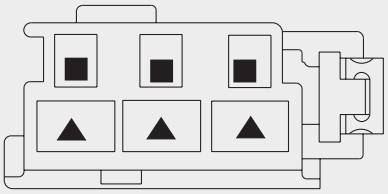

**NOTE:** Specifications in this catalog are for general reference only and are subject to change without notice. To verify product information, please contact a Delphi representative.

# Mixed Device Connections

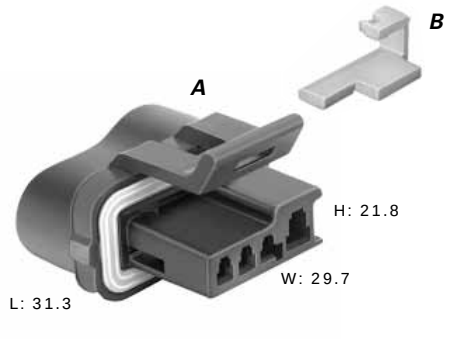


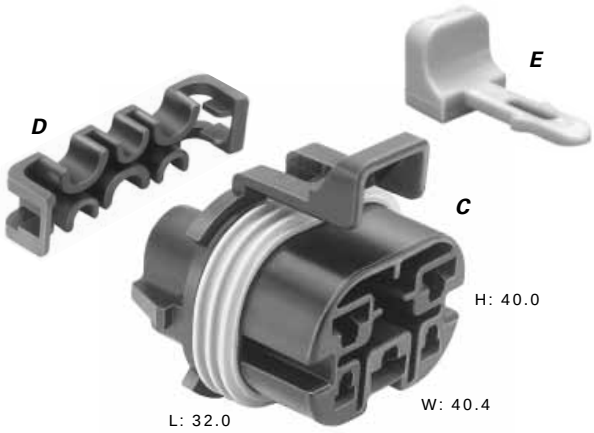


### A. Part No: 12124898

| | |
|---|---|
| Description: | Connector Assembly 4F |
| Size: | 31.3L x 21.8H x 29.7W |
| Color: | Black |
| Material: | PBT |
| Terminals: | See Page 2.72 |
| Seals/Plugs: | See Page 2.74 |
| Typical App: | Alternator |

### B. Part No: 12045897

| | |
|---|---|
| Description: | Secondary Lock |
| Color: | Natural |
| Material: | PBT |

### C. Part No: 12052287

| | |
|---|---|
| Description: | Connector Assembly 5F |
| Size: | 32.0L x 40.0H x 40.4W |
| Color: | Black |
| Material: | PA66 HS IM |
| Terminals: | See Page 2.72 |
| Seals/Plugs: | See Page 2.74 |
| Typical App: | Switch |

### D. Part No: 12052290

| | |
|---|---|
| Description: | TPA |
| Color: | Black |
| Material: | PA66 HS IM |

### E. Part No: 12020833

| | |
|---|---|
| Description: | CPA |
| Color: | Gray |
| Material: | PBT |

**KEY:**
- ◪ 150 SERIES
- ■ 280 SERIES

Mixed connectors feature a combination of different terminal cavities, as indicated by the key.

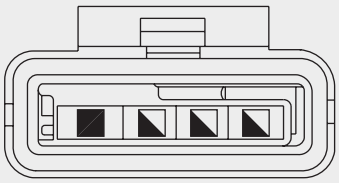

**KEY:**
- ■ 280 SERIES
- ▲ 630 SERIES

Mixed connectors feature a combination of different terminal cavities, as indicated by the key.

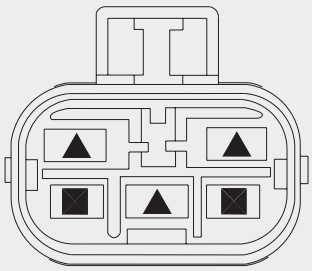

**NOTE:** Specifications in this catalog are for general reference only and are subject to change without notice. To verify product information, please contact a Delphi representative.

# Mixed Device Connections

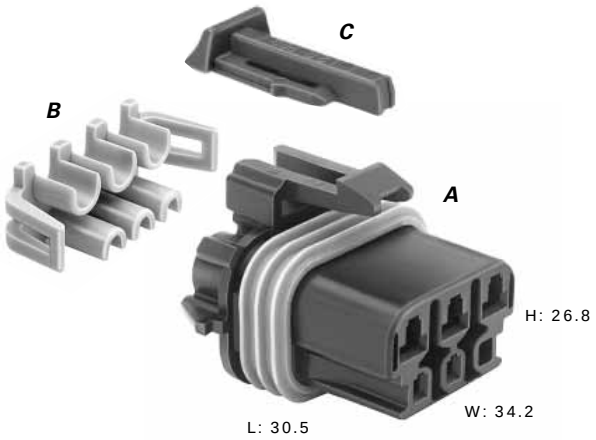


### A. Part No: 12186347

| | |
|---|---|
| Description: | Connector Assembly 6F |
| Size: | 30.5L x 26.8H x 34.2W |
| Color: | Md. Gray |
| Material: | PA66 HS IM |
| Terminals: | See Page 2.72 |
| Seals/Plugs: | See Page 2.74 |
| Typical App: | Wiper Motor |

### B. Part No: 12129124

| | |
|---|---|
| Description: | TPA |
| Color: | Lt. Gray |
| Material: | PA66 HS IM |

### C. Part No: 12052834

| | |
|---|---|
| Description: | CPA |
| Color: | Green |
| Material: | PP |

**KEY:**

- ◪ 150 SERIES
- ■ 280 SERIES

Mixed connectors feature a combination of different terminal cavities, as indicated by the key.

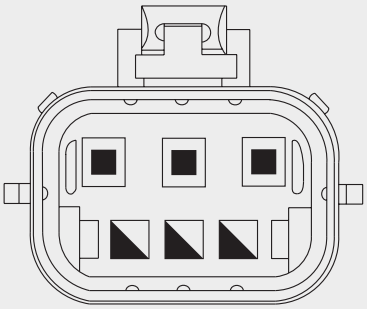

**NOTE:** Specifications in this catalog are for general reference only and are subject to change without notice. To verify product information, please contact a Delphi representative.

# Junction Systems

Available in pass-through and in-line connections, Metri-Pack Junction System Series connectors can meet or exceed the requirements for most marine, appliance, and industrial control applications.

Ideally suited for combination low energy and high current applications that do not require environmental protection, Metri-Pack Junction System Series products are extremely versatile.

Available in pass-through and in-line connections for underhood vehicle applications, Metri-Pack Junction System Series sealed connectors can meet or exceed the requirements for most marine, appliance, and industrial control applications.

Metri-Pack Junction Series sealed systems are ideally suited for combination, low-energy electronic, and high current applications that require protection from environmental hazards.

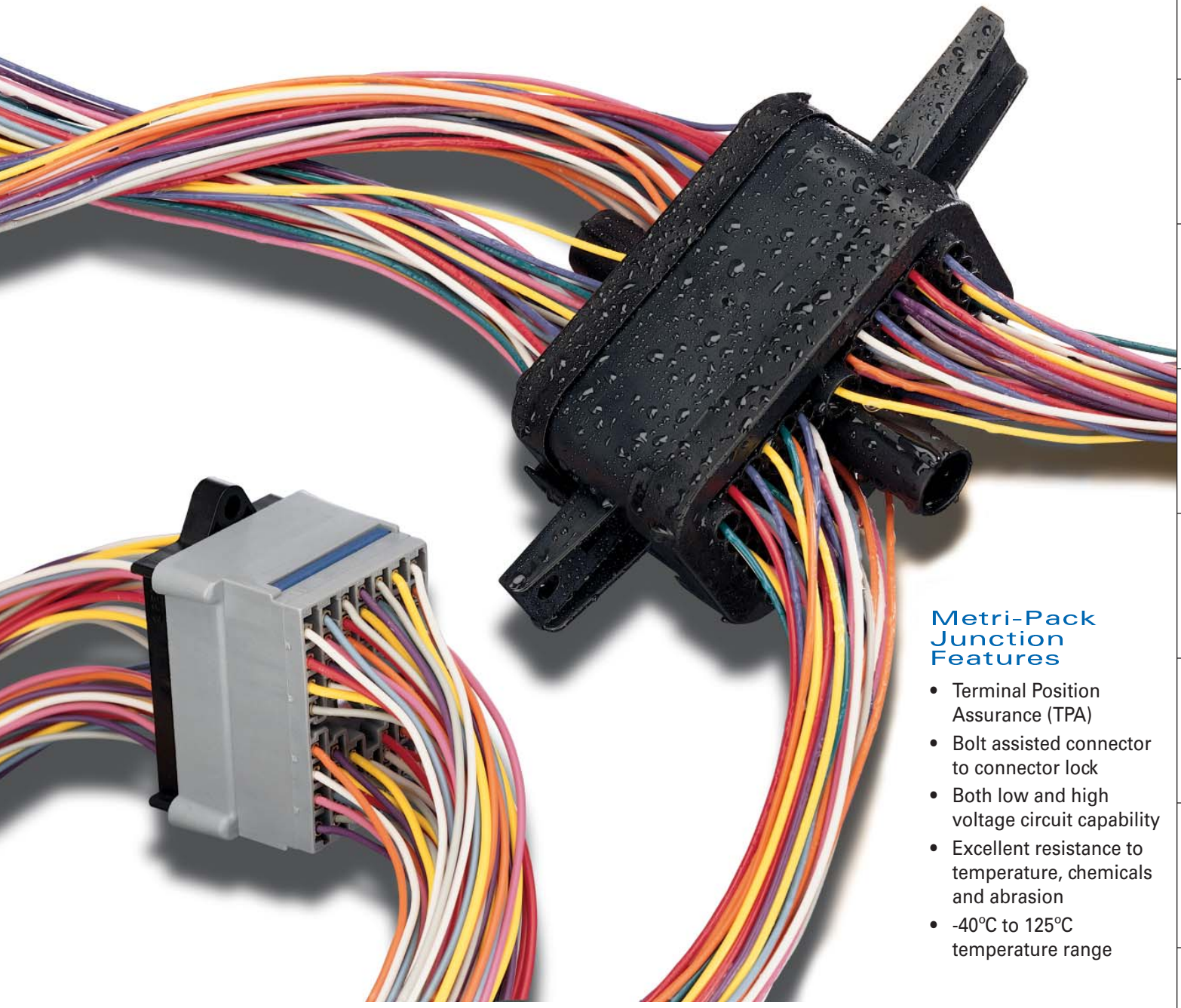

## Metri-Pack Junction Features

- Terminal Position Assurance (TPA)
- Bolt assisted connector to connector lock
- Both low and high voltage circuit capability
- Excellent resistance to temperature, chemicals and abrasion
- -40°C to 125°C temperature range

# Junction Systems

## Female Unsealed System

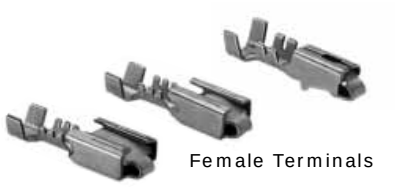

Female Terminals

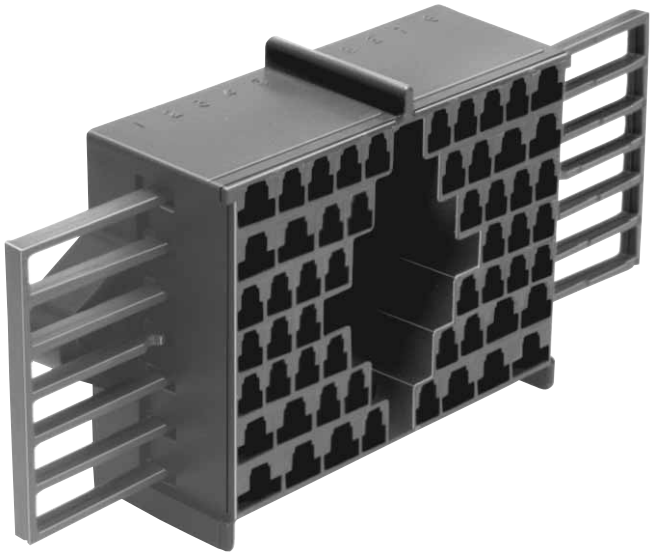

Secondary Lock

Secondary Lock

**Female Connector**

| Junction Systems Female Connectors Unsealed | | | | |
|---|---|---|---|---|
| **# Cavities** | **Connector** | **Color** | **Material** | **Secondary Lock** |
| 42way: 42 | 15492518 | Black | PA66 HS IM | 12015510 |
| | | | | 12015511 |
| 56way: 56 | 15492672 | Black | PA66 HS IM | 15324764 |
| 116way: 116 | 15492622 | Black | PA66 HS IM 14% GF | 12047751 |

**NOTE:** Specifications in this catalog are for general reference only and are subject to change without notice. To verify product information, please contact a Delphi representative.

# Junction Systems

## Male Unsealed System

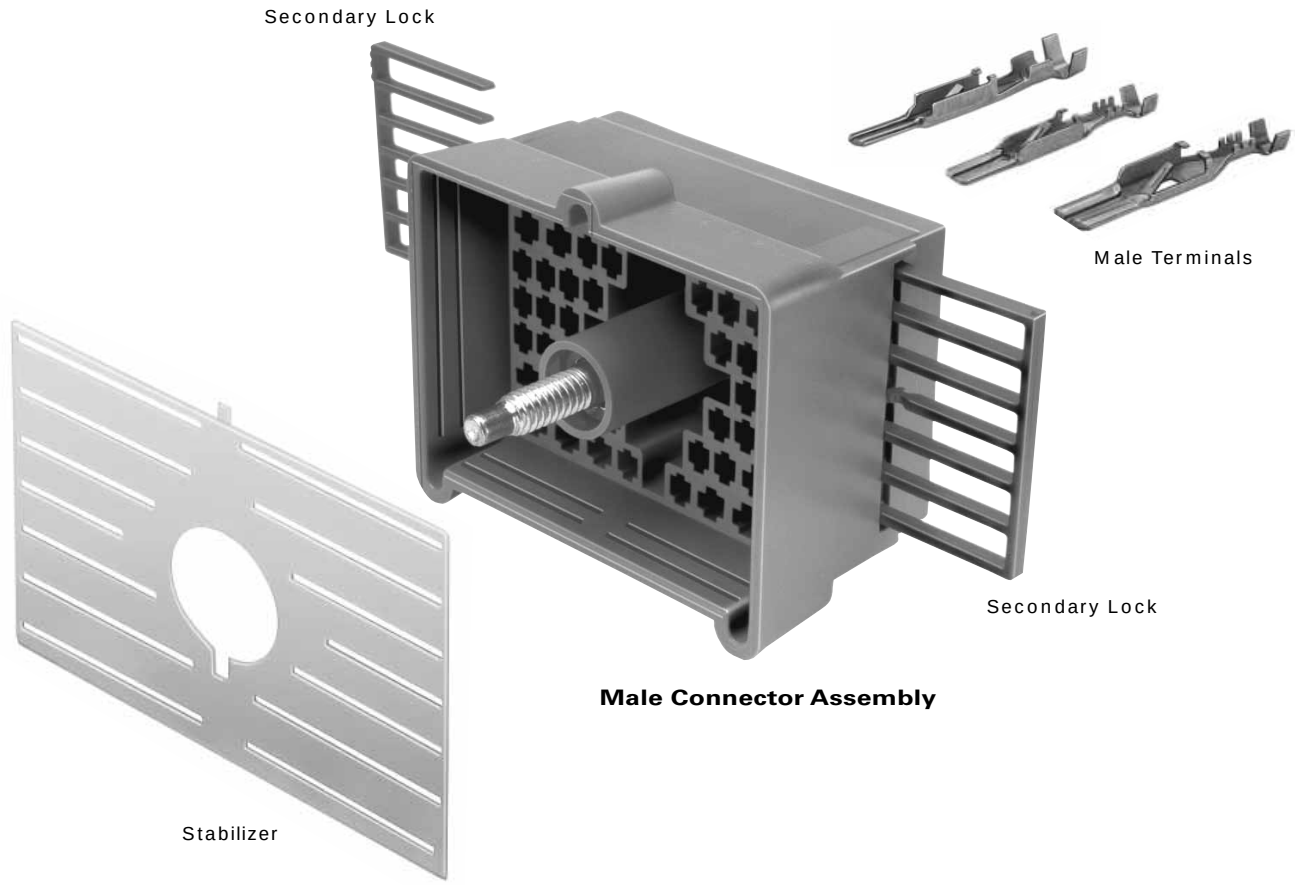


**Male Connector Assembly**

| Junction Systems Male Connector Assemblies Unsealed | | | | | |
|---|---|---|---|---|---|
| **# Cavities** | **Conn. Asm.** | **Color** | **Material** | **Secondary Lock** | **Stabilizer** |
| 42way: 25 | 15492519 | Black | PA66 HS IM | 12015510 | 12162412 |
| : 17 | 12020629 | Black | PA66 HS IM | 12015511 | 12162413 |
| 56way: 56 | 15492558 | Md. Gray | PA66 HS IM | 15324764 | 12186869 |
| 116way: 116 | 15492657 | Black | PPE | 15402131 | 12124732 |

**NOTE:** Specifications in this catalog are for general reference only and are subject to change without notice. To verify product information, please contact a Delphi representative.

# Junction Systems

## Unsealed System Application Information

### 150 Series Terminals – Tin Plated

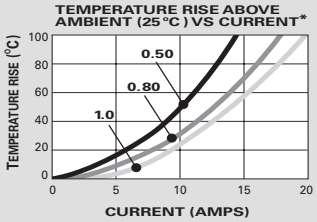


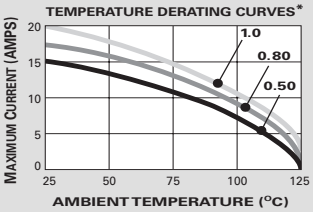


CABLE RANGE (mm²): ..... 0.35-1.0
CURRENT RANGE (AMPS): ..... 0-14
TEMP RANGE °C: ..... -40 to 125
RESISTANCE: ..... <10mΩ@20mV

VOLTAGE DROP: ... <10.0mV/amp
CENTERLINE SPACING (mm): .....
..... Connector Dependent
BLADE WIDTH (mm): ..... 1.5

### 280 Series Terminals – Tin Plated

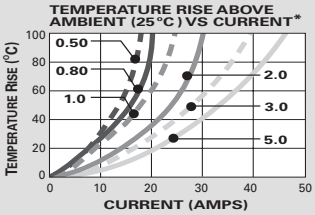


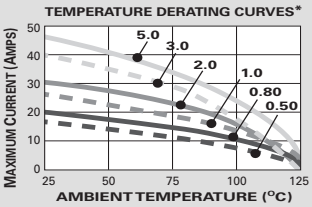


CABLE RANGE (mm²): ..... 0.35-5.0
CURRENT RANGE (AMPS): ..... 0-30
TEMP RANGE °C: ..... -40 to 125
RESISTANCE: ..... <10mΩ@20mV

VOLTAGE DROP: ..... <3.0mV/amp
CENTERLINE SPACING (mm): .....
..... Connector Dependent
BLADE WIDTH (mm): ..... 2.8

*The test data are based on single circuits in free space and were generated using a "Lumped Resistance" model. This model does not account for all of the variables that would be present in an actual application. For actual product performance, contact your regional support representative.

### 150 Series Female Terminals Unsealed

| Part # | Cable Range (mm²) | Material | Plating |
|---|---|---|---|
| 12047767 | 1.0-0.80 | Silicon Bronze | Tin |
| 12064971 | 0.50-0.35 | Silicon Bronze | Tin |

### 480 Series Female Terminals Unsealed

| Part # | Cable Range (mm²) | Material | Plating |
|---|---|---|---|
| 12084595 | 5.0-3.0 | Tin Brass | Tin |
| 12052221 | 3.0 | Tin Brass | Tin |
| 12124304 | 2.0-1.0 | Tin Brass | Tin |
| 12015860 | 0.80-0.50 | Tin Brass | Tin |
| 12052219 | 0.50-0.35 | Tin Brass | Tin |
| 12020366 | 2.0-1.0 (1 Req'd.)<br>0.80-0.50 (1 Req'd.) | Tin Brass | Tin |

### 280 Series Female Terminals Unsealed

| Part # | Cable Range (mm²) | Material | Plating |
|---|---|---|---|
| 12015858 | 5.0-3.0 | Tin Brass | Tin |
| 12129494 | 3.0-2.0 | Tin Brass | Tin |
| 12034046 | 0.80-0.50 | Tin Brass | Tin |
| 12052217 | 0.50-0.35 | Tin Brass | Tin |
| 12162597* | 3.0-2.0 | Tin Brass | Tin |
| 12162595* | 1.0-0.80 | Tin Brass | Tin |
| 12162596* | 0.50-0.35 | Tin Brass | Tin |

### 630 Series Female Terminals Unsealed

| Part # | Cable Range (mm²) | Material | Plating |
|---|---|---|---|
| 12084590 | 5.0-3.0 | Tin Brass | Tin |
| 12052224 | 3.0 | Tin Brass | Tin |
| 12084596 | 5.0-3.0 (2 Req'd.) | Tin Brass | Tin |
| 12015870 | 2.0-1.0 | Tin Brass | Tin |
| 12015869 | 0.80-0.50 | Tin Brass | Tin |
| 12020035 | 0.80-0.50 (2 Req'd.) | Tin Brass | Tin |
| 12052222 | 0.50-0.35 | Tin Brass | Tin |

***Thin Stock**—Electrical current restrictions may apply.

**NOTE:** Specifications in this catalog are for general reference only and are subject to change without notice. To verify product information, please contact a Delphi representative.

# Junction Systems

## Unsealed System Application Information

### 480 Series Terminals – Tin Plated

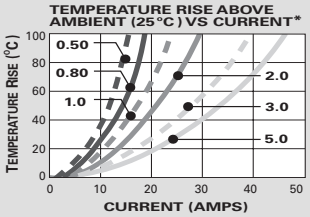


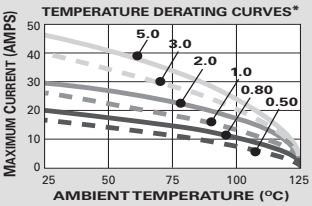


CABLE RANGE (mm²): ..... 0.35-5.0
CURRENT RANGE (AMPS): ..... 0-42
TEMP RANGE °C: ..... -40 to 125
RESISTANCE: ..... <10mΩ@20mV

VOLTAGE DROP: ..... <3.0mV/amp
CENTERLINE SPACING (mm): .....
..... Connector Dependent
BLADE WIDTH (mm): ..... 4.8

### 630 Series Terminals – Tin Plated

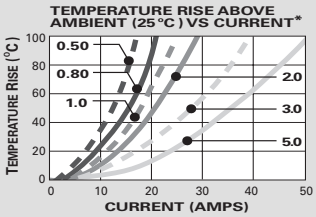


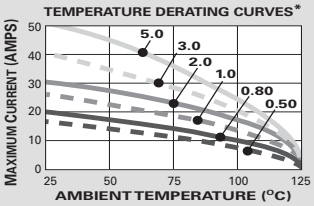


CABLE RANGE (mm²): ..... 0.35-5.0
CURRENT RANGE (AMPS): ..... 0-46
TEMP RANGE °C: ..... -40 to 125
RESISTANCE: ..... <10mΩ@20mV

VOLTAGE DROP: ..... <3.0mV/amp
CENTERLINE SPACING (mm): .....
..... Connector Dependent
BLADE WIDTH (mm): ..... 6.3

*The test data are based on single circuits in free space and were generated using a "Lumped Resistance" model. This model does not account for all of the variables that would be present in an actual application. For actual product performance, contact your regional support representative.

### 150 Series Male Terminals Unsealed

| Part # | Cable Range (mm²) | Material | Plating |
|---|---|---|---|
| 12047581 | 0.80-0.50 | Tin Brass | Tin |
| 12059894 | 0.50-0.35 | Tin Brass | Tin |

### 480 Series Male Terminals Unsealed

| Part # | Cable Range (mm²) | Material | Plating |
|---|---|---|---|
| 12033820 | 5.0-3.0 | Tin Brass | Tin over Copper |
| 12052827 | 3.0 | Tin Brass | Tin over Copper |
| 12020120 | 2.0-1.0 | Tin Brass | Tin over Copper |
| 12020119 | 0.80-0.50 | Tin Brass | Tin over Copper |
| 12066269 | 0.50-0.35 | Tin Brass | Tin over Copper |
| 12020784 | 0.35 (2 Req'd.) | Tin Brass | Tin over Copper |

### 280 Series Male Terminals Unsealed

| Part # | Cable Range (mm²) | Material | Plating |
|---|---|---|---|
| 12084586 | 5.0-3.0 | Tin Brass | Tin |
| 12129498 | 3.0-2.0 | Tin Brass | Tin |
| 12020116 | 1.0 | Tin Brass | Tin |
| 12034047 | 0.80-0.50 | Tin Brass | Tin |
| 12066271 | 0.50-0.35 | Tin Brass | Tin |
| 12020782 | 0.35 (2 Req'd.) | Tin Brass | Tin |

### 630 Series Male Terminals Unsealed

| Part # | Cable Range (mm²) | Material | Plating |
|---|---|---|---|
| 12066493 | 5.0-3.0 | Tin Brass | Tin over Copper |
| 12052826 | 3.0 | Tin Brass | Tin over Copper |
| 12020365 | 3.0 (2 Req'd.) | Tin Brass | Tin over Copper |
| 12020126 | 2.0-1.0 | Tin Brass | Tin over Copper |
| 12020125 | 0.80-0.50 | Tin Brass | Tin over Copper |
| 12033972 | 0.80-0.50 (2 Req'd.) | Tin Brass | Tin over Copper |
| 12066454 | 0.50-0.35 | Tin Brass | Tin over Copper |

**NOTE:** Specifications in this catalog are for general reference only and are subject to change without notice. To verify product information, please contact a Delphi representative.

# Junction Systems

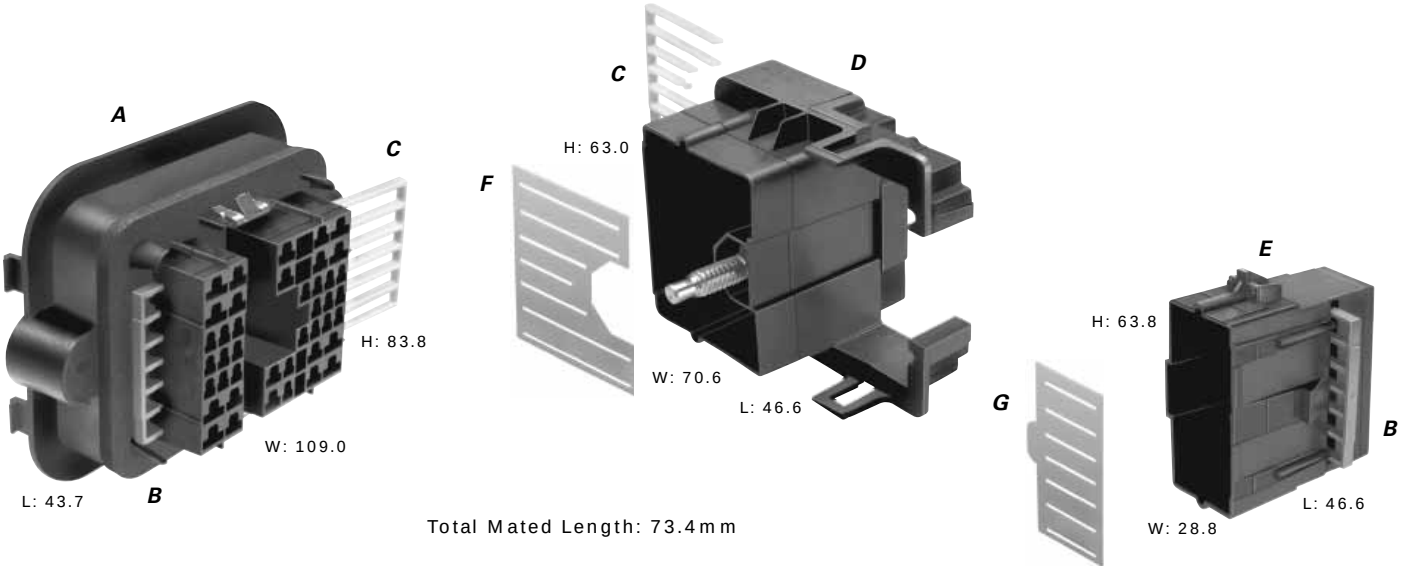


Total Mated Length: 73.4mm

### A. Part No: 15492518

| | |
|---|---|
| Description: | Connector Assembly 42F |
| Size: | 43.7L x 83.8H x 109.0W |
| Color: | Black |
| Material: | PA66 HS IM |
| Terminals: | See Page 2.82 |
| Note: | Available with Grease Covers 12015513 and 12033602 |

### B. Part No: 12015511

| | |
|---|---|
| Description: | Secondary Lock |
| Number Req: | 2 |
| Color: | Blue |
| Material: | PBT |

### C. Part No: 12015510

| | |
|---|---|
| Description: | Secondary Lock |
| Number Req: | 2 |
| Color: | Natural |
| Material: | PBT |

### D. Part No: 15492519

| | |
|---|---|
| Description: | Connector Assembly 25M |
| Size: | 46.6L x 63.0H x 70.6W |
| Color: | Black |
| Material: | PA66 HS IM |
| Terminals: | See Page 2.83 |

### E. Part No: 12020629

| | |
|---|---|
| Description: | Connector 17M |
| Size: | 46.6L x 63.8H x 28.8W |
| Color: | Black |
| Material: | PA66 HS IM |
| Terminals: | See Page 2.83 |
| Note: | Available with Grease Cover 12033601 |

### F. Part No: 12162412

| | |
|---|---|
| Description: | Stabilizer |
| Color: | Natural |
| Material: | Mylar |

### G. Part No: 12162413

| | |
|---|---|
| Description: | Stabilizer |
| Color: | Natural |
| Material: | Mylar |

**KEY:**

- ■ 280 SERIES
- ● 480 SERIES
- ▲ 630 SERIES

Mixed connectors feature a combination of different terminal cavities, as indicated by the key.

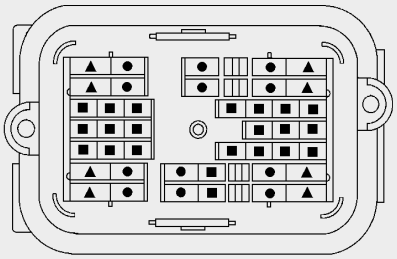

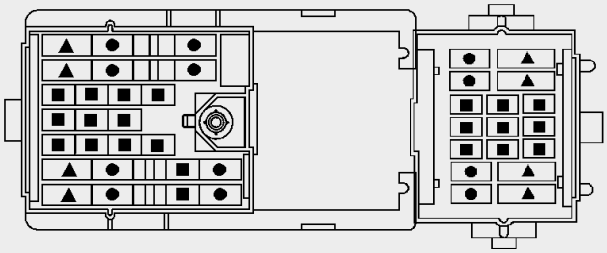

**NOTE:** Specifications in this catalog are for general reference only and are subject to change without notice. To verify product information, please contact a Delphi representative.

# Junction Systems

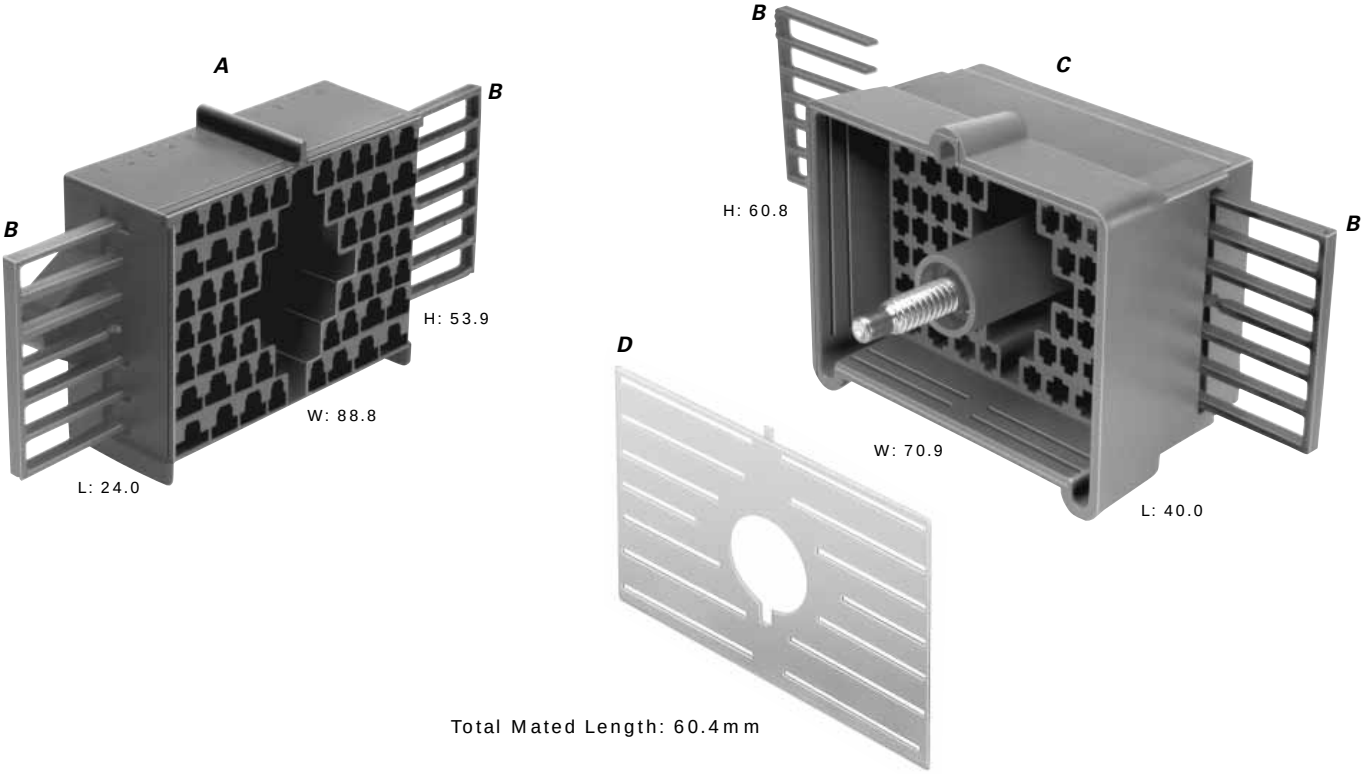


### A. Part No: 15492672

| | |
|---|---|
| Description: | Connector Assembly 56F |
| Size: | 24.0L x 53.9H x 88.8W |
| Color: | Black |
| Material: | PA66 HS IM |
| Terminals: | See Page 2.82 |

### B. Part No: 15324764

| | |
|---|---|
| Description: | Secondary Lock |
| Number Req: | 4 |
| Color: | Blue |
| Material: | PBT |

### C. Part No: 15492558

| | |
|---|---|
| Description: | Connector Assembly 56M |
| Size: | 40.0L x 60.8H x 70.9W |
| Color: | Md. Gray |
| Material: | PA66 HS IM |
| Terminals: | See Page 2.83 |

### D. Part No: 12186869

| | |
|---|---|
| Description: | Stabilizer |
| Color: | Natural |
| Material: | Mylar |

**KEY:**

- ■ 280 SERIES
- ● 480 SERIES
- ▲ 630 SERIES

Mixed connectors feature a combination of different terminal cavities, as indicated by the key.

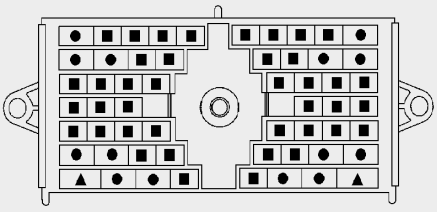

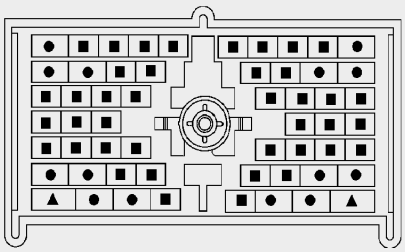

**NOTE:** Specifications in this catalog are for general reference only and are subject to change without notice. To verify product information, please contact a Delphi representative.

# Junction Systems

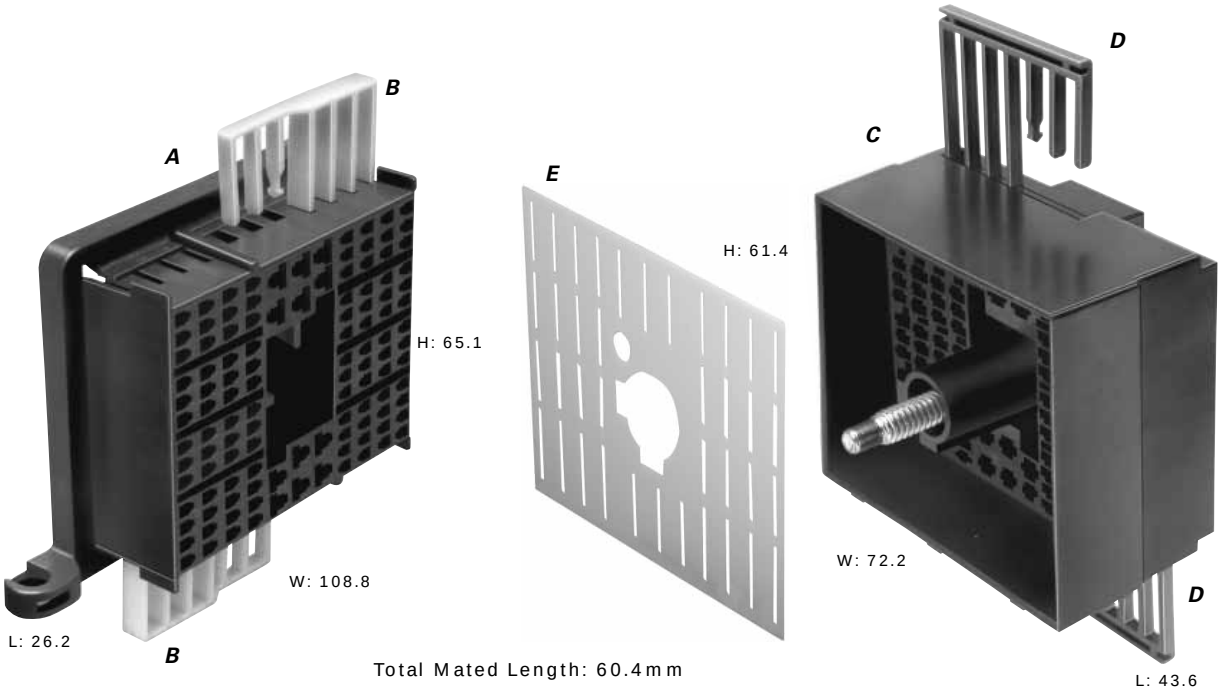


### A. Part No: 15492622

| | |
|---|---|
| Description: | Connector Assembly 116F |
| Size: | 26.2L x 65.1H x 108.8W |
| Color: | Black |
| Material: | PA66 HS IM 14% GF |
| Terminals: | See Page 2.82 |

### B. Part No: 12047751

| | |
|---|---|
| Description: | Secondary Lock |
| Number Req: | 2 |
| Color: | Natural |
| Material: | PBT |

### C. Part No: 15492657

| | |
|---|---|
| Description: | Connector Assembly 116M |
| Size: | 43.6L x 61.4H x 72.2W |
| Color: | Black |
| Material: | PPE |
| Terminals: | See Page 2.83 |
| Note: | See product print for assembly information |

### D. Part No: 15402131

| | |
|---|---|
| Description: | Secondary Lock |
| Number Req: | 2 |
| Color: | Blue |
| Material: | PBT |

### E. Part No: 12124732

| | |
|---|---|
| Description: | Stabilizer |
| Color: | Natural |
| Material: | Mylar |

**KEY:**
- ◪ 150 SERIES
- ■ 280 SERIES

Mixed connectors feature a combination of different terminal cavities, as indicated by the key.

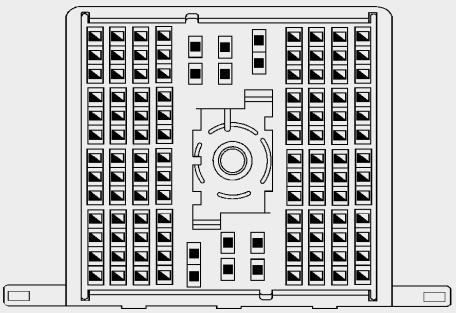

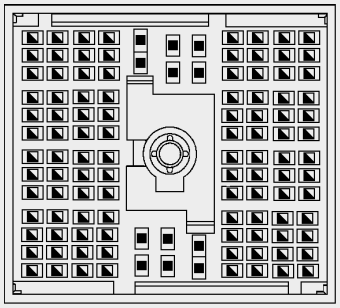

**NOTE:** Specifications in this catalog are for general reference only and are subject to change without notice. To verify product information, please contact a Delphi representative.

# Junction Systems

## Female Sealed System

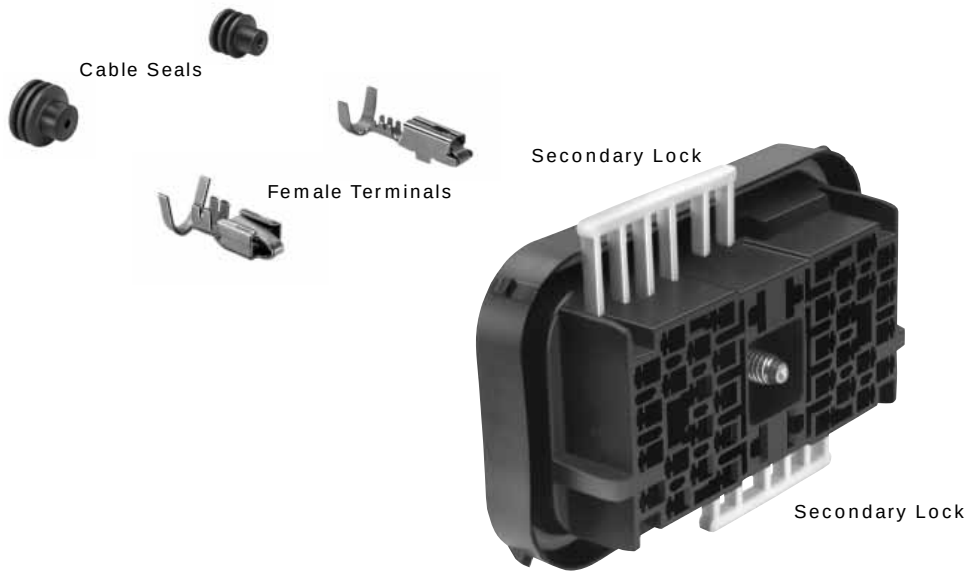


**Female Connector Assembly**

| Junction Systems Female Connector Assemblies Sealed | | | | |
|---|---|---|---|---|
| **# Cavities** | **Conn. Asm.** | **Color** | **Material** | **Secondary Lock** |
| 30 | 15492567 | Black | PBT | 12066050 |
| 36 | 15492591* | Black | PBT | 12064835 |
| 38 | 15492642 | Black | PA66 14% GF HS IM & PA66 15% GF + MD 25% HS | 12129669 |
| 78 | 15492601 | Black | PA66 HS 33% GF | 12129214 |

*Note: 15492591 (F) is unsealed for use in a protected environment.

**NOTE:** Specifications in this catalog are for general reference only and are subject to change without notice. To verify product information, please contact a Delphi representative.

# Junction Systems

## Male Sealed System

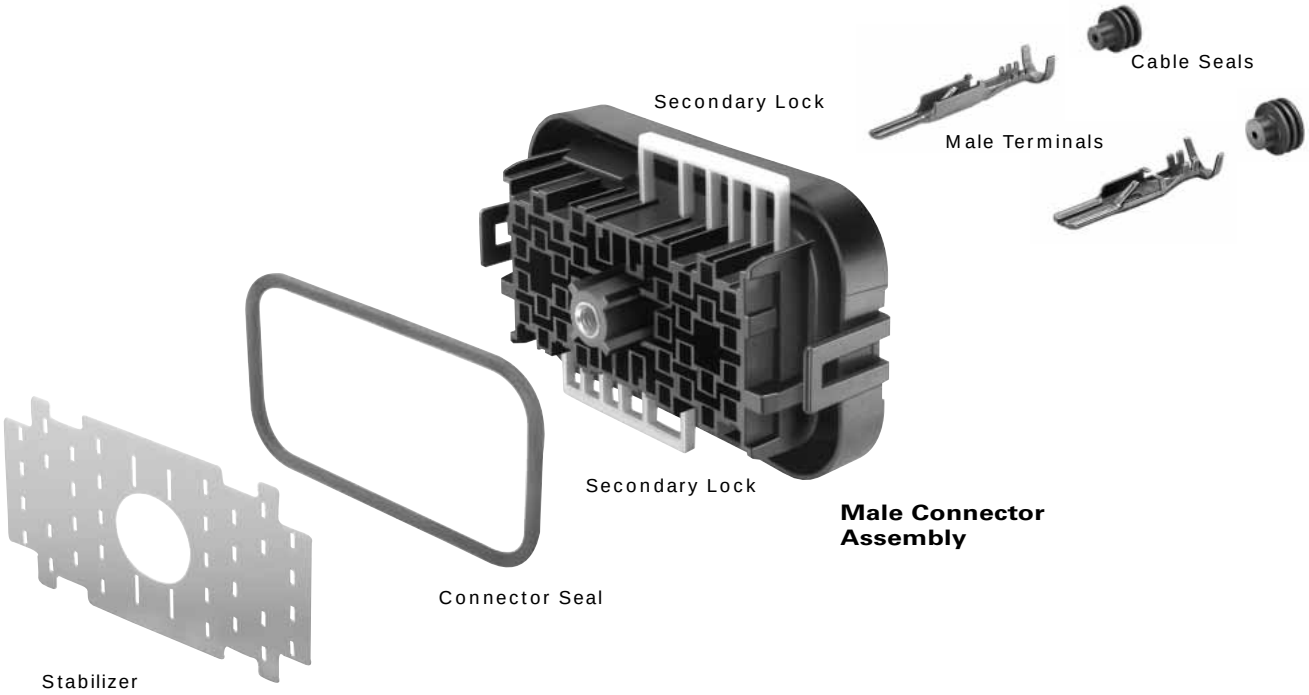


| Junction Systems Male Connector Assemblies Sealed | | | | | | | |
|---|---|---|---|---|---|---|---|
| **# Cavities** | **Conn. Asm.** | **Color** | **Material** | **Secondary Lock** | **Stabilizer** | **Shroud** | **Connector Seal** |
| 30 | 12160959 | Black | PBT | 12065848 | – | 13577943 | 12065849 |
| 36 | 15492562 | Black | PBT | 12064834 | – | 12066590 | 12064837 |
| 38 | 12191487 | Dk.Gray | PA66 HS IM 14% GF | 12129670 | 15317352 | 12161191 | 12129672 |
| 78 | 15498985 | Black | PA66 HS 33% GF | 12129213 | 12162573 | 12162527 | – |

**NOTE:** Specifications in this catalog are for general reference only and are subject to change without notice. To verify product information, please contact a Delphi representative.

# Junction Systems

## Sealed System Application Information

### 150 Series Terminals – Tin Plated

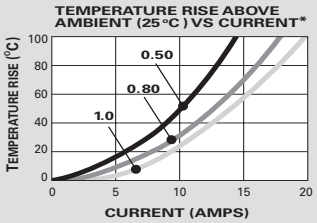


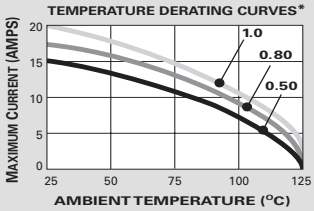


CABLE RANGE (mm²): ..... 0.35-1.0
CURRENT RANGE (AMPS): ..... 0-14
TEMP RANGE °C: ..... -40 to 125
RESISTANCE: ..... <10mΩ@20mV

VOLTAGE DROP: ..... <10.0mV/amp
CENTERLINE SPACING (mm): .....
.....Connector Dependent
BLADE WIDTH (mm): ..... 1.5

### 280 Series Terminals – Tin Plated

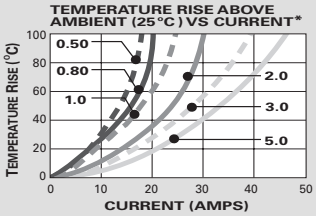


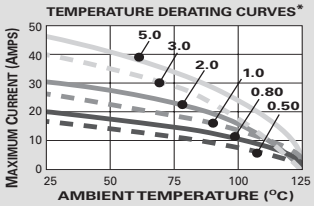


CABLE RANGE (mm²): ..... 0.35-5.0
CURRENT RANGE (AMPS): ..... 0-30
TEMP RANGE °C: ..... -40 to 125
RESISTANCE: ..... <10mΩ@20mV

VOLTAGE DROP: ..... <3.0mV/amp
CENTERLINE SPACING (mm): .....
.....Connector Dependent
BLADE WIDTH (mm): ..... 2.8

*The test data are based on single circuits in free space and were generated using a "Lumped Resistance" model. This model does not account for all of the variables that would be present in an actual application. For actual product performance, contact your regional support representative.

### 150 Series Female Terminals Sealed

| Part # | Cable Range (mm²) | Material | Plating |
|---|---|---|---|
| 12048074 | 1.0-0.80-0.50 | Silicon Bronze | Tin |
| 12084200 | 0.50-0.35 | Silicon Bronze | Tin |
| 12160223 | 1.0-0.80 | Beryllium Copper | Silver/Nickel |
| 12160222 | 0.50-0.35 | Beryllium Copper | Silver/Nickel |

### 280 Series Female Terminals Sealed

| Part # | Cable Range (mm²) | Material | Plating |
|---|---|---|---|
| 12077413 | 3.0 | Tin Brass | Tin |
| 12129493 | 3.0-2.0 | Tin Brass | Tin |
| 12077411 | 1.0-0.80-0.50 | Tin Brass | Tin |
| 12084201 | 0.50-0.35 | Tin Brass | Tin |
| 12176387 | 5.0 | Beryllium Copper | Silver/Nickel |
| 12176388 | 3.0-2.0 | Beryllium Copper | Silver/Nickel |
| 12176389 | 1.0-0.80 | Beryllium Copper | Silver/Nickel |

TANGLESS

### 280 Tangless Series Female Terminals Sealed

| Part # | Cable Range (mm²) | Material | Plating |
|---|---|---|---|
| 12110853 | 5.0-3.0 | Tin Brass | Tin |
| 12129409 | 2.0 | Tin Brass | Tin |
| 12110845* | 3.0-2.0 | Tin Brass | Tin |
| 12110847* | 1.0-0.80 | Tin Brass | Tin |
| 12110846* | 0.50-0.35 | Tin Brass | Tin |

**Use for Part No. 15492642 (Shown on Page 2.95)**

***Thin Stock**—Electrical current restrictions may apply.

### 480 Series Female Terminals Sealed

| Part # | Cable Range (mm²) | Material | Plating |
|---|---|---|---|
| 12052139 | 5.0-3.0 | Tin Brass | Tin |
| 12048451 | 2.0-1.0 | Tin Brass | Tin |
| 12048450 | 0.80-0.50 | Tin Brass | Tin |

### 630 Series Female Terminals Sealed

| Part # | Cable Range (mm²) | Material | Plating |
|---|---|---|---|
| 12052456 | 5.0-3.0 | Tin Brass | Tin |
| 12052455 | 2.0-1.0 | Tin Brass | Tin |
| 12052457 | 0.80-0.50 | Tin Brass | Tin |

**NOTE:** Specifications in this catalog are for general reference only and are subject to change without notice. To verify product information, please contact a Delphi representative.

# Junction Systems

## Sealed System Application Information

### 480 Series Terminals – Tin Plated

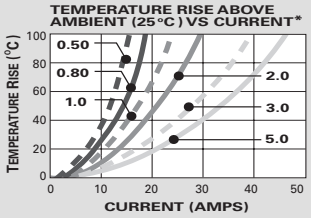


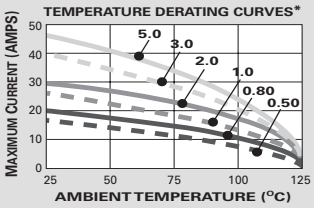


CABLE RANGE (mm²): ..... 0.35-5.0
CURRENT RANGE (AMPS): ..... 0-42
TEMP RANGE °C: ..... -40 to 125
RESISTANCE: ..... <10mΩ@20mV

VOLTAGE DROP: ..... <3.0mV/amp
CENTERLINE SPACING (mm): .....
..... Connector Dependent
BLADE WIDTH (mm): ..... 4.8

### 630 Series Terminals – Tin Plated

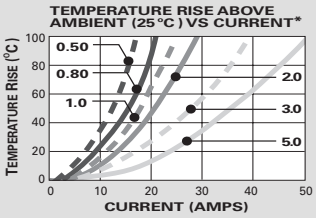


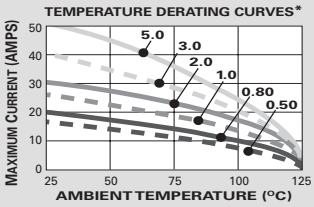


CABLE RANGE (mm²): ..... 0.35-5.0
CURRENT RANGE (AMPS): ..... 0-46
TEMP RANGE °C: ..... -40 to 125
RESISTANCE: ..... <10mΩ@20mV

VOLTAGE DROP: ..... <3.0mV/amp
CENTERLINE SPACING (mm): .....
..... Connector Dependent
BLADE WIDTH (mm): ..... 6.3

*The test data are based on single circuits in free space and were generated using a "Lumped Resistance" model. This model does not account for all of the variables that would be present in an actual application. For actual product performance, contact your regional support representative.

| 150 Series Male Terminals Sealed | | | |
|---|---|---|---|
| **Part #** | **Cable Range (mm²)** | **Material** | **Plating** |
| 12045773 | 0.80-0.50 | Tin Brass | Tin |
| 12077628 | 0.50-0.35 | Tin Brass | Tin |

| 480 Series Male Terminals Sealed | | | |
|---|---|---|---|
| **Part #** | **Cable Range (mm²)** | **Material** | **Plating** |
| 12052172 | 5.0 | Tin Brass | Tin |
| 12065197 | 3.0 | Tin Brass | Tin |
| 12065196 | 2.0-1.0 | Tin Brass | Tin |

| 280 Series Male Terminals Sealed | | | |
|---|---|---|---|
| **Part #** | **Cable Range (mm²)** | **Material** | **Plating** |
| 12048254 | 3.0 | Tin Brass | Tin |
| 12129497 | 3.0-2.0 | Tin Brass | Tin |
| 12048159 | 0.80-0.50 | Tin Brass | Tin |
| 12124977 | 0.50-0.35 | Tin Brass | Tin |

| 630 Series Male Terminals Sealed | | | |
|---|---|---|---|
| **Part #** | **Cable Range (mm²)** | **Material** | **Plating** |
| 12064736 | 5.0 | Tin Brass | Tin |
| 12064737 | 3.0 | Tin Brass | Tin |
| 12064735 | 2.0-1.0 | Tin Brass | Tin |
| 12064734 | 0.80-0.50 | Tin Brass | Tin |

**NOTE:** Specifications in this catalog are for general reference only and are subject to change without notice. To verify product information, please contact a Delphi representative.

# Junction Systems

## Sealed System Cable Seals & Cavity Plugs

### 150 Metri-Pack Cable Seals

| Reel Part # | Loose Part # | Cable Dia. | Material | Color |
|---|---|---|---|---|
| 12052924 | 15324973 | 2.85-2.03 | Silicone | Dk. Red |
| 12089442 | 15324976 | 2.15-1.60 | Silicone | White |
| 12052925 | 15324974 | 1.70-1.29 | Silicone | Blue |
| 12124669 | 15324975 | 1.009-0.995 | Silicone | Tan |

### 150 Metri-Pack Cavity Plug*

| Part # | Cavity Inside Diameter | Material | Color |
|---|---|---|---|
| 12059168 | 5.2mm | Silicone | Dk. Red |

*Cavity plugs seal unused female and male cavities.

### 280 Metri-Pack Cable Seals

| Reel Part # | Loose Part # | Cable Dia. | Material | Color |
|---|---|---|---|---|
| 12015360 | 15324981 | 4.30-3.45 | Silicone | Blue |
| 12015359 | 15324980 | 3.49-2.81 | Silicone | Gray |
| 12015284 | 15324982 | 2.85-2.03 | Silicone | Green |
| 12041352 | 15324984 | 2.42-2.03 | Silicone | Tan |
| 12089444 | 15324985 | 2.15-1.60 | Silicone | Purple |
| 12034365 | 15324983 | 1.70-1.29 | Silicone | Dk. Red |

### 280 Metri-Pack Cavity Plug*

| Part # | Cavity Inside Diameter | Material | Color |
|---|---|---|---|
| 12010300 | 6.7mm | Silicone | Green |

*Cavity plugs seal unused female and male cavities.

### 480 Metri-Pack Cable Seals

| Reel Part # | Loose Part # | Cable Dia. | Material | Color |
|---|---|---|---|---|
| 12065703 | 15324987 | 5.16-4.40 | Silicone | Orange |
| 12052453 | 15324990 | 4.50-3.61 | Silicone | Purple |
| 12052452 | 15324989 | 3.76-2.81 | Silicone | Red |
| 12048433 | 15324988 | 2.85-2.01 | Silicone | White |
| 12052931 | 15324991 | 2.15-1.60 | Silicone | Yellow |
| 12162068 | 15324992 | 1.70-1.29 | Silicone | Pink |

### 480 Metri-Pack Cavity Plug*

| Part # | Cavity Inside Diameter | Material | Color |
|---|---|---|---|
| 12066082 | 8.5mm | Silicone | Green |

*Cavity plugs seal unused female and male cavities.

### 630 Metri-Pack Cable Seals

| Reel Part # | Loose Part # | Cable Dia. | Material | Color |
|---|---|---|---|---|
| 12059257 | 15324993 | 5.15-4.40 | Silicone | Green |
| 12059260 | 15324996 | 4.50-3.61 | Silicone | Blue |
| 12059258 | 15324994 | 3.75-2.81 | Silicone | Lt. Gray |
| 12059259 | 15324995 | 2.85-2.01 | Silicone | Dk. Red |
| 12077760 | 15324997 | 2.40-1.65 | Silicone | Tan |

### 630 Metri-Pack Cavity Plug*

| Part # | Cavity Inside Diameter | Material | Color |
|---|---|---|---|
| 12059255 | 9.8mm | Silicone | Green |

*Cavity plugs seal unused female and male cavities.

**NOTE:** Specifications in this catalog are for general reference only and are subject to change without notice. To verify product information, please contact a Delphi representative.

# Junction Systems

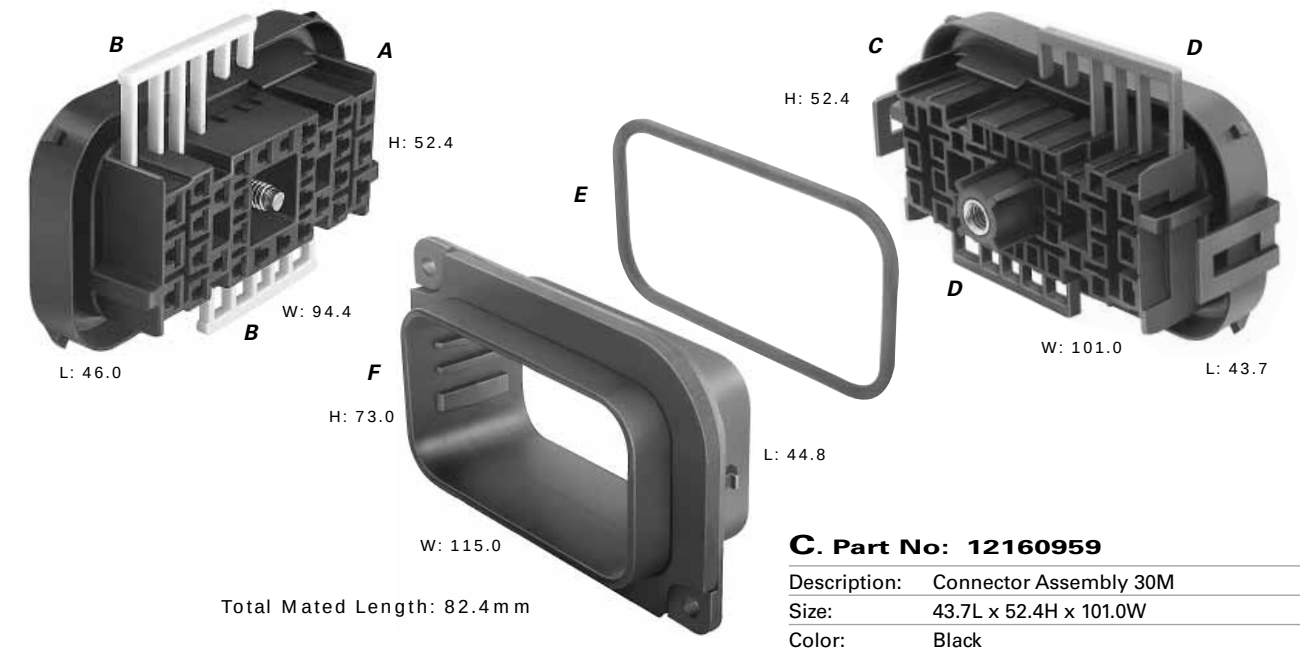


Total Mated Length: 82.4mm

### A. Part No: 15492567

| | |
|---|---|
| Description: | Connector Assembly 30F |
| Size: | 46.0L x 52.4H x 94.4W |
| Color: | Black |
| Material: | PBT |
| Terminals: | See Page 2.90 |
| Seals/Plugs: | See Page 2.92 |

### B. Part No: 12066050

| | |
|---|---|
| Description: | Secondary Lock |
| Number Req: | 2 |
| Color: | Natural |
| Material: | PBT |

### C. Part No: 12160959

| | |
|---|---|
| Description: | Connector Assembly 30M |
| Size: | 43.7L x 52.4H x 101.0W |
| Color: | Black |
| Material: | PBT |
| Terminals: | See Page 2.91 |
| Seals/Plugs: | See Page 2.92 |
| Note: | Wire dress cover 12066129 is available. |

### D. Part No: 12065848

| | |
|---|---|
| Description: | Secondary Lock |
| Number Req: | 2 |
| Color: | Blue |
| Material: | PBT |

### E. Part No: 12065849

| | |
|---|---|
| Description: | Connector Seal |
| Color: | Green |
| Material: | Silicone |

### F. Part No: 13577943

| | |
|---|---|
| Description: | Pass-Through Shroud |
| Size: | 44.8L x 73.0H x 115.0W |
| Color: | Black |
| Material: | PBT 30% GF |
| Note: | Body mount shroud 12065847 is available. |

**KEY:**

- ■ 280 SERIES
- ● 480 SERIES

Mixed connectors feature a combination of different terminal cavities, as indicated by the key.

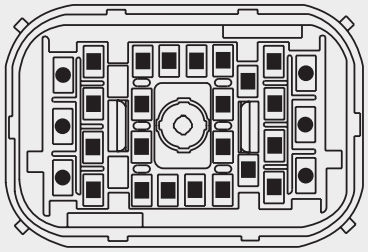

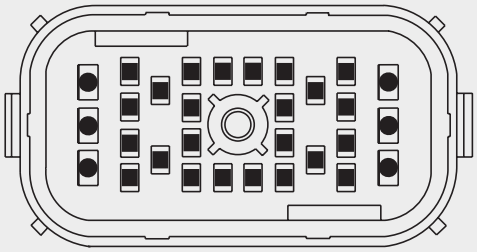

**NOTE:** Specifications in this catalog are for general reference only and are subject to change without notice. To verify product information, please contact a Delphi representative.

# Junction Systems

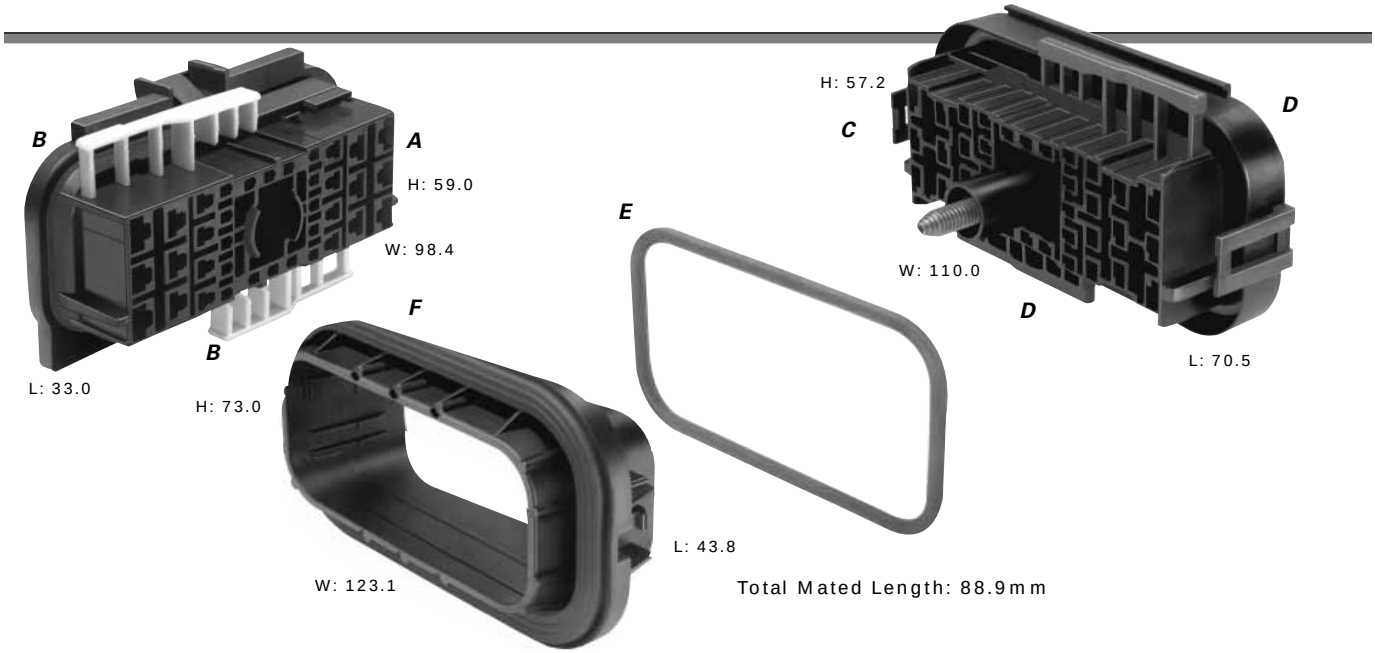


Total Mated Length: 88.9mm

### A. Part No: 15492591

| | |
|---|---|
| Description: | Connector Assembly 36F (Unsealed) |
| Size: | 33.0L x 59.0H x 98.4W |
| Color: | Black |
| Material: | PBT |
| Terminals: | See Page 2.82 for Unsealed terminals |

### B. Part No: 12064835

| | |
|---|---|
| Description: | Secondary Lock |
| Number Req: | 2 |
| Color: | Natural |
| Material: | PBT |

### C. Part No: 15492562

| | |
|---|---|
| Description: | Connector Assembly 36M |
| Size: | 70.5L x 57.2H x 110.0W |
| Color: | Black |
| Material: | PBT |
| Terminals: | See Page 2.91 |
| Seals/Plugs: | See Page 2.92 |

### D. Part No: 12064834

| | |
|---|---|
| Description: | Secondary Lock |
| Number Req: | 2 |
| Color: | Blue |
| Material: | PBT |

### E. Part No: 12064837

| | |
|---|---|
| Description: | Connector Seal |
| Color: | Green |
| Material: | Silicone |

### F. Part No: 12066590

| | |
|---|---|
| Description: | Sliding Shroud |
| Size: | 43.8L x 73.0H x 123.1W |
| Color: | Black |
| Material: | PBT 30% GF |

**KEY:**

- ◪ 150 SERIES
- ■ 280 SERIES
- ● 480 SERIES
- ▲ 630 SERIES

Mixed connectors feature a combination of different terminal cavities, as indicated by the key.

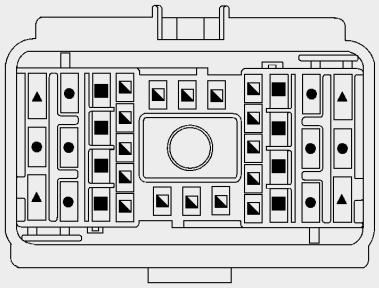

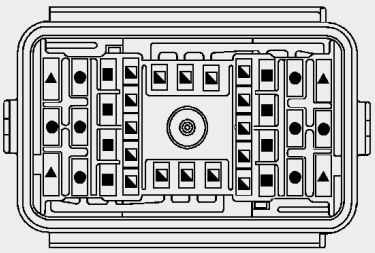

**NOTE:** Specifications in this catalog are for general reference only and are subject to change without notice. To verify product information, please contact a Delphi representative.

# Junction Systems

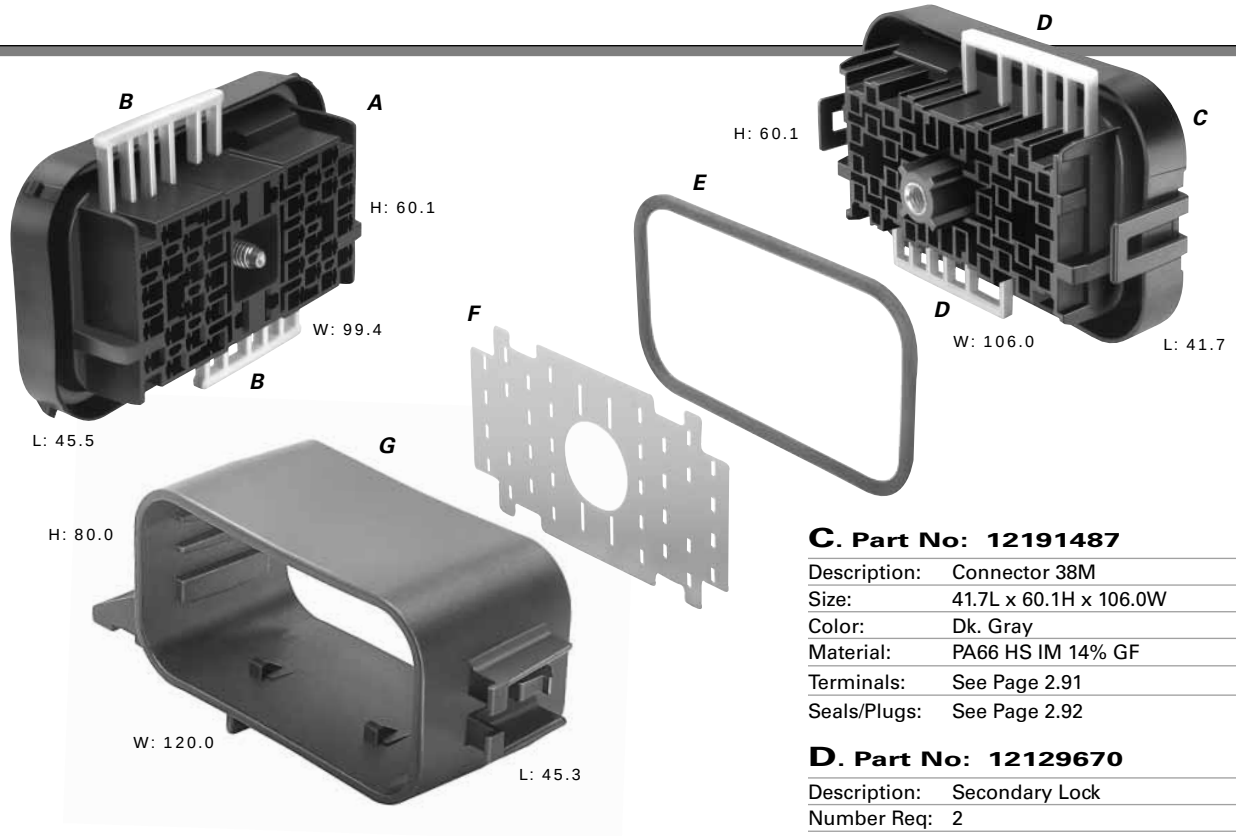


Total Mated Length: 85.3mm

### A. Part No: 15492642

| | |
|---|---|
| Description: | Connector Assembly 38F |
| Size: | 45.5L x 60.1H x 99.4W |
| Color: | Black |
| Material: | PA66 14% GF HS IM & PA66 15% GF + MD 25% HS |
| Terminals: | See Page 2.90 - 280 Tangless |
| | See Page 2.90 - 630 Series |
| Seals/Plugs: | See Page 2.92 |

### B. Part No: 12129669

| | |
|---|---|
| Description: | Secondary Lock |
| Number Req: | 2 |
| Color: | Natural |
| Material: | PBT |

### C. Part No: 12191487

| | |
|---|---|
| Description: | Connector 38M |
| Size: | 41.7L x 60.1H x 106.0W |
| Color: | Dk. Gray |
| Material: | PA66 HS IM 14% GF |
| Terminals: | See Page 2.91 |
| Seals/Plugs: | See Page 2.92 |

### D. Part No: 12129670

| | |
|---|---|
| Description: | Secondary Lock |
| Number Req: | 2 |
| Color: | Natural |
| Material: | PBT |

### E. Part No: 12129672

| | |
|---|---|
| Description: | Connector Seal |
| Color: | Green |
| Material: | Silicone |

### F. Part No: 15317352

| | |
|---|---|
| Description: | Stabilizer |
| Color: | Natural |
| Material: | Mylar |

### G. Part No: 12161191

| | |
|---|---|
| Description: | Pass-Through Shroud |
| Size: | 45.3L x 80.0H x 120.0W |
| Color: | Black |
| Material: | PBT 15% GF |
| Note: | Body mount shroud 12160809 is available. |

**KEY:**

TANGLESS

■ 280 SERIES
▲ 630 SERIES

Mixed connectors feature a combination of different terminal cavities, as indicated by the key.

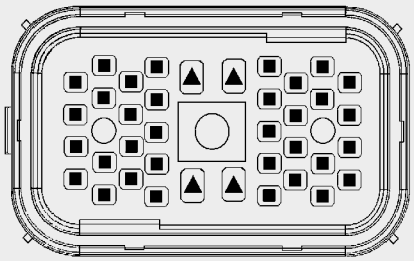

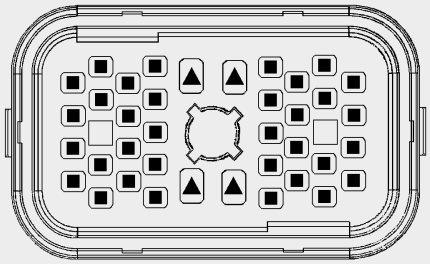

**NOTE:** Specifications in this catalog are for general reference only and are subject to change without notice. To verify product information, please contact a Delphi representative.

# Junction Systems

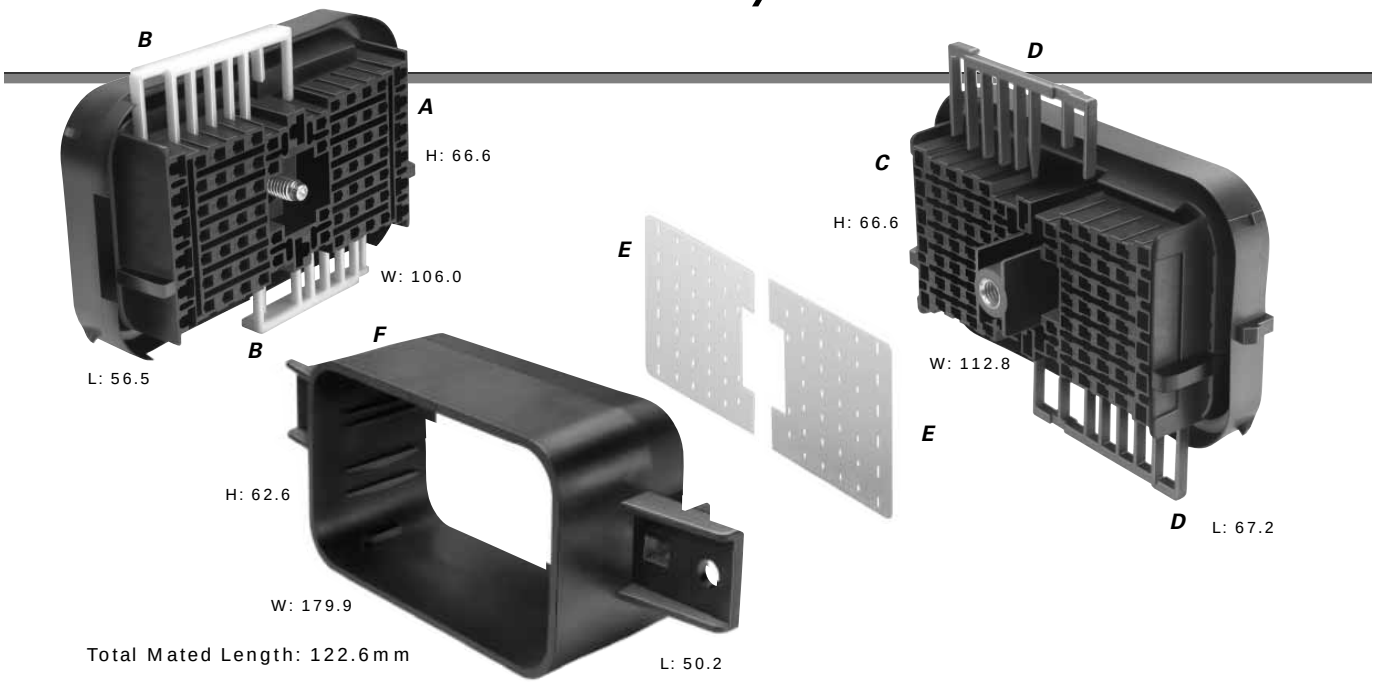


## A. Part No: 15492601

| | |
|---|---|
| Description: | Connector Assembly 78F |
| Size: | 56.5L x 66.6H x 106.0W |
| Color: | Black |
| Material: | PA66 HS 33% GF |
| Terminals: | See Page 2.90 |
| Seals/Plugs: | See Page 2.92 |

## B. Part No: 12129214

| | |
|---|---|
| Description: | Secondary Lock |
| Number Req: | 2 |
| Color: | Natural |
| Material: | PBT |

## C. Part No: 15498985

| | |
|---|---|
| Description: | Connector Assembly 78M |
| Size: | 67.2L x 66.6H x 112.8W |
| Color: | Black |
| Material: | PA66 HS 33% GF |
| Terminals: | See Page 2.91 |
| Seals/Plugs: | See Page 2.92 |

## D. Part No: 12129213

| | |
|---|---|
| Description: | Secondary Lock |
| Number Req: | 2 |
| Color: | Blue |
| Material: | PBT |

## E. Part No: 12162573

| | |
|---|---|
| Description: | Stabilizer |
| Number Req: | 2 |
| Color: | Natural |
| Material: | Mylar |

## F. Part No: 12162527

| | |
|---|---|
| Description: | Sliding Shroud |
| Size: | 50.2L x 62.6H x 179.9W |
| Color: | Black |
| Material: | PBT |

**KEY:**

- ◥ 150 SERIES
- ■ 280 SERIES
- ▲ 630 SERIES

Mixed connectors feature a combination of different terminal cavities, as indicated by the key.

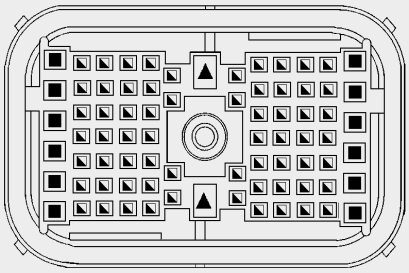

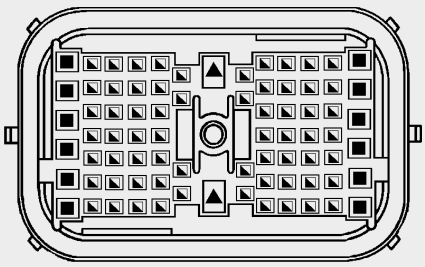

**NOTE:** Specifications in this catalog are for general reference only and are subject to change without notice. To verify product information, please contact a Delphi representative.

# Header

The Metri-Pack 280 Series unsealed electronic header is a versatile, and extremely rugged system designed to meet customer's power circuit needs.

This system offers the combination of excellent low energy electronic circuits and power circuit capability in a single connection.

The Metri-Pack 150 Series sealed electronic header is a rugged system designed for severe underhood environments. This system offers the combination of excellent low energy electronic circuits and power circuit capability in a single connection.

Metri-Pack 150 Series sealed header systems are ideally suited for critical, low-energy electronic applications that require protection from environmental hazards.

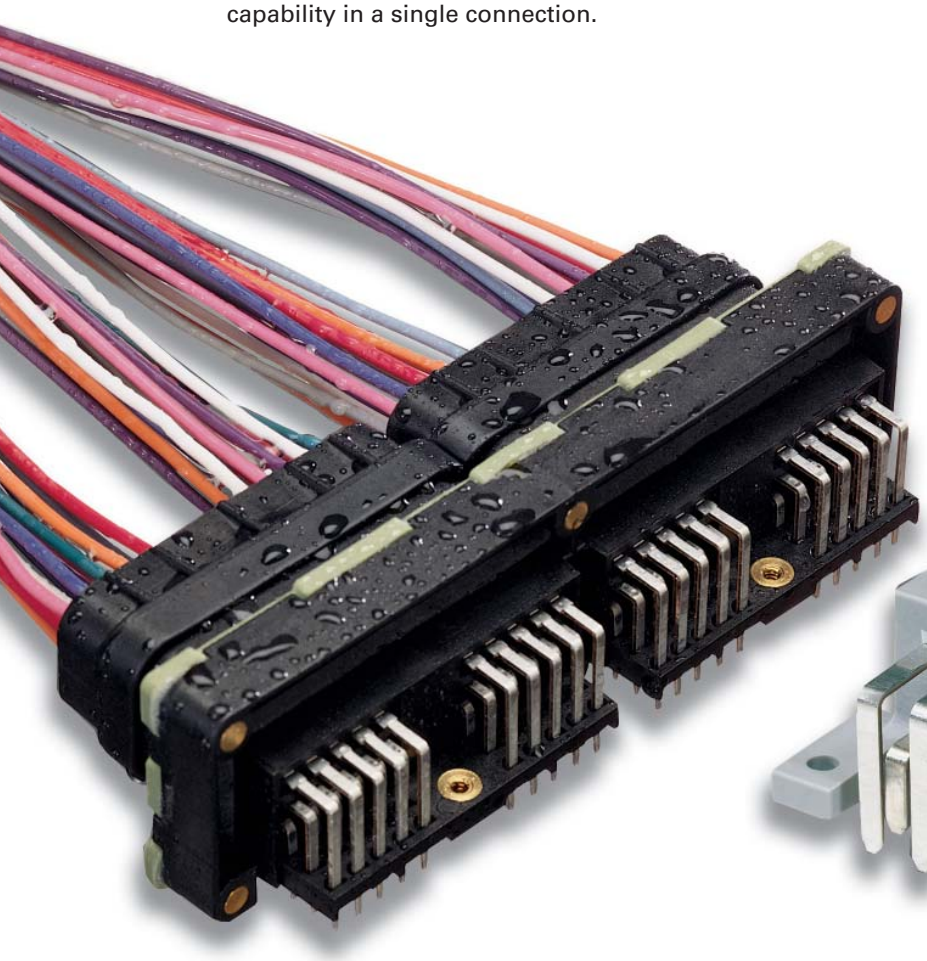

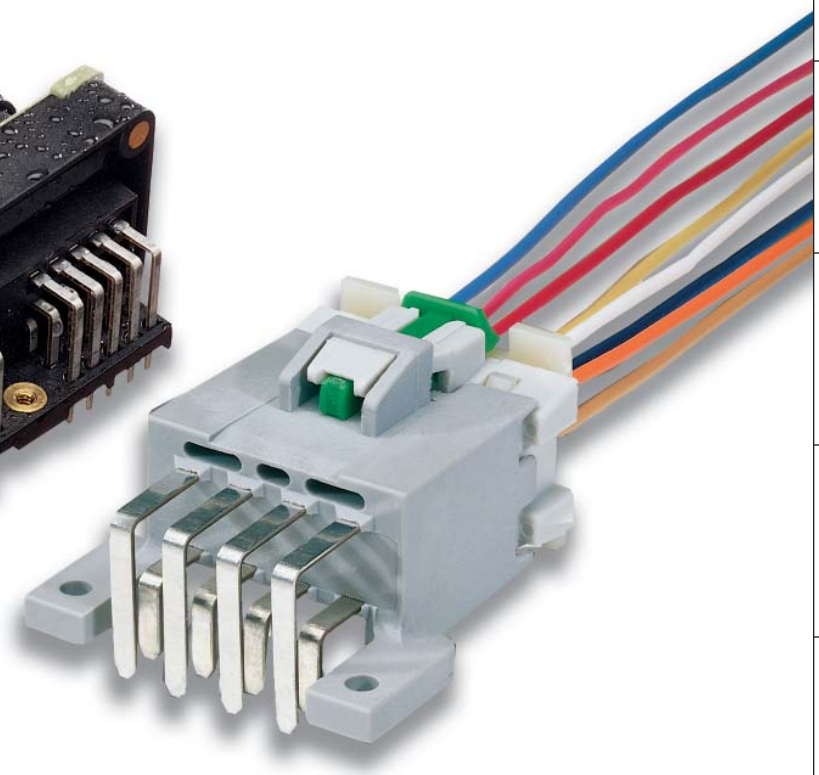

## Metri-Pack Header Features

- Terminal Position Assurance (TPA)
- 14 Amps continuous maximum current rating for 150 Metri-Pack Series
- 30 Amps continuous maximum current rating for 280 Metri-Pack Series
- Low energy, low voltage capability
- Small overall dimensions
- Bolt assist connector to connector lock
- -40°C to 125°C temperature range

# 150 Header

## Cross Sectional View

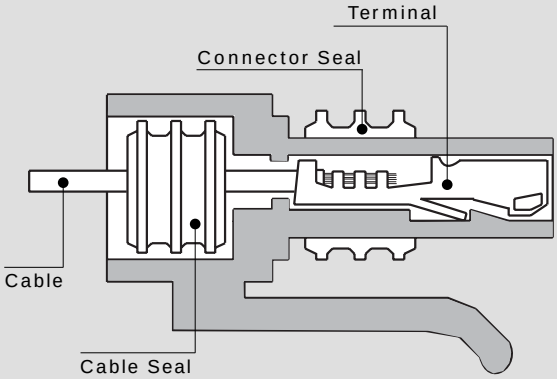


**Female Connector Assembly**

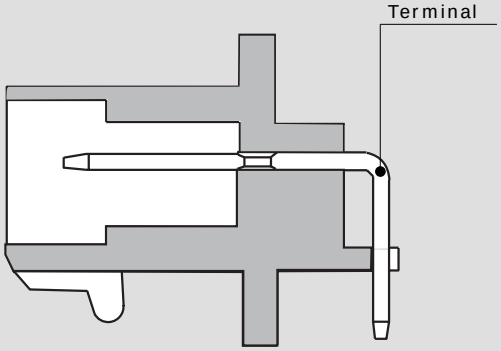


**Male Header Connector Assembly**

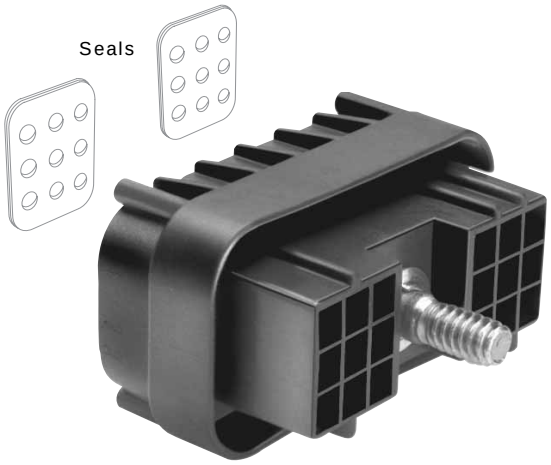


**Female Connector Assembly**

Female Terminal

### 150 Pull-to-Seat Female Terminals Sealed

| Part # | Cable Range (mm²) | Material | Plating |
|---|---|---|---|
| 12089290 | 0.50-0.35 | Silicon Bronze | Tin |
| 12103881 | 1.0-0.80 | Silicon Bronze | Tin |
| 12110236 | 1.0-0.80-0.50 | Beryllium Copper | Tin |

### 150 Metri-Pack Female Connector Assemblies Sealed*

| # Cavities | Connector Assembly | Color | Material |
|---|---|---|---|
| 18way: 18 | 15492546 | Black | PBT 30% GF |
| 30way: 30 | 15492553 | Gray | PET 30% GF |
| 48way: 18 | 15492546 | Black | PBT 30% GF |
| : 30 | 15492542 | Black | PET 30% GF |
| 60way: 30 | 15492542 | Black | PET 30% GF |
| : 30 | 15492543 | Black | PET 30% GF |

*Multiple cable seal is included in connector assembly.

**NOTE:** Specifications in this catalog are for general reference only and are subject to change without notice. To verify product information, please contact a Delphi representative.

# 150 Header

## Sealed System Application Information

CABLE RANGE (mm²): ..... 0.35-1.0

CURRENT RANGE (AMPS): ..... 0-14

TEMP RANGE °C: ..... -40 to 125

RESISTANCE: ..... <10mΩ@20mV

VOLTAGE DROP: ..... <10mV/amp

CENTERLINE SPACING (mm): .....

..... Connector Dependent

BLADE WIDTH (mm): ..... 1.5

### 150 Series Terminals – Tin Plated

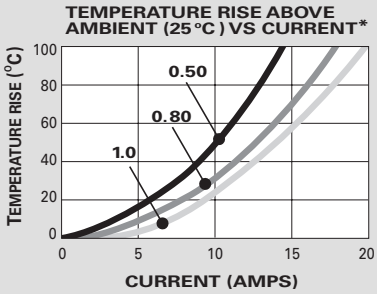


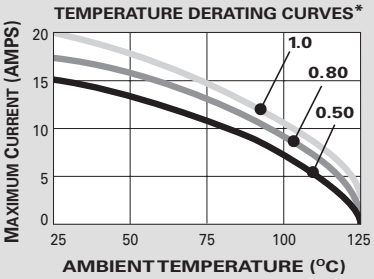


*The test data are based on single circuits in free space and were generated using a "Lumped Resistance" model. This model does not account for all of the variables that would be present in an actual application. For actual product performance, contact your regional support representative.

**Male Header Connector Assembly**

12065266

12034413

### 150 Metri-Pack Male Header Connector Assemblies Sealed

| Pins | Connector | Color | Material |
|---|---|---|---|
| 18 | 12040923 | Black | PET 30% GF |
| 30 | 12048453 | Gray | PET 30% GF |
| 48 | 12052130 | Black | PET 30% GF |
| 60 | 12034396 | Black | PET 30% GF |

Terminals Included in Male Header.

### Cable Seal Plugs

| Part # | Cable Seal Hole Diameter (mm) | Material | Color | Type |
|---|---|---|---|---|
| 12065266 | 1.85-1.65 | PA6 | Md. Gray | Machine Insertion |
| 12034413 | 1.85-1.10 | PA6 | Black | Hand Insertion |

**SECTION NOTES:**

- Due to rigid tolerances of connector cavities, it is critical to meet all crimp dimensions as specified.
- Overall mated length varies with bolt measurement.
- Inner connector seal included in Male Header Connector Assemblies where applicable.

**NOTE:** Specifications in this catalog are for general reference only and are subject to change without notice. To verify product information, please contact a Delphi representative.

# 150 Header

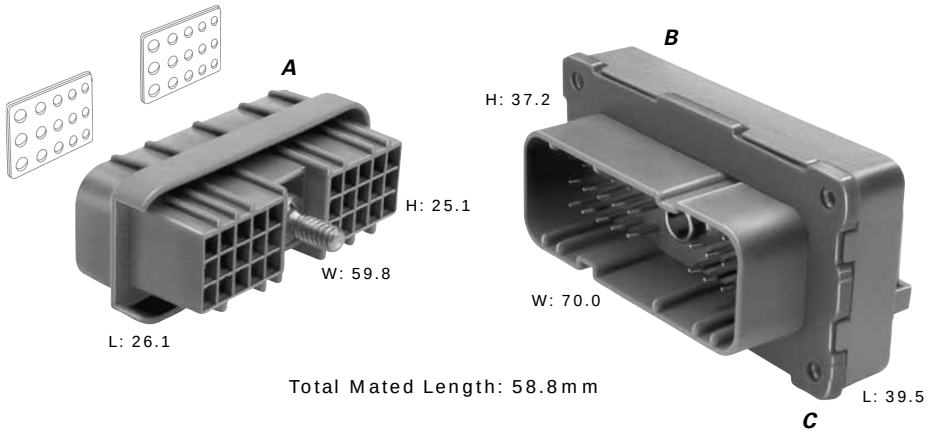


Total Mated Length: 58.8mm

### A. Part No: 15492553

| | |
|---|---|
| Description: | Connector Assembly 30F |
| Size: | 26.1L x 25.1H x 59.8W |
| Color: | Gray |
| Material: | PET 30% GF |
| Terminals: | See Page 2.98, 150 Pull-To-Seat Female |
| Plugs: | See Page 2.99, Cable Seal Plugs |

### B. Part No: 12048453

| | |
|---|---|
| Description: | Connector Assembly 30M |
| Size: | 39.5L x 37.2H x 70.0W |
| Color: | Gray |
| Material: | PET 30% GF |
| Note: | Shipping cover 12040542 included. |

### C. Part No: 12048456

| | |
|---|---|
| Description: | Flange Seal |
| Color: | Green |
| Material: | Silicone |

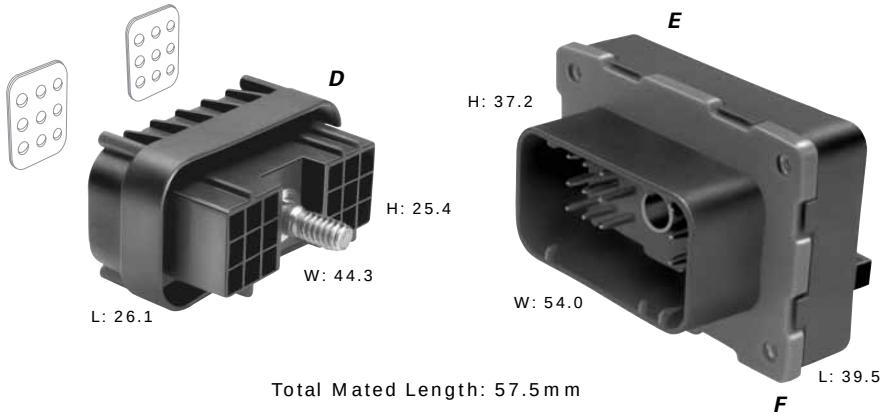


Total Mated Length: 57.5mm

### D. Part No: 15492546

| | |
|---|---|
| Description: | Connector Assembly 18F |
| Size: | 26.1L x 25.4H x 44.3W |
| Color: | Black |
| Material: | PBT 30% GF |
| Terminals: | See Page 2.98, 150 Pull-To-Seat Female |
| Plugs: | See Page 2.99, Cable Seal Plugs |

### E. Part No: 12040923

| | |
|---|---|
| Description: | Connector Assembly 18M |
| Size: | 39.5L x 37.2H x 54.0W |
| Color: | Black |
| Material: | PET 30% GF |
| Note: | Shipping cover 12040940 included. |

### F. Part No: 12040938

| | |
|---|---|
| Description: | Flange Seal |
| Color: | Green |
| Material: | Silicone |

**NOTE:** Specifications in this catalog are for general reference only and are subject to change without notice. To verify product information, please contact a Delphi representative.

# 150 Header

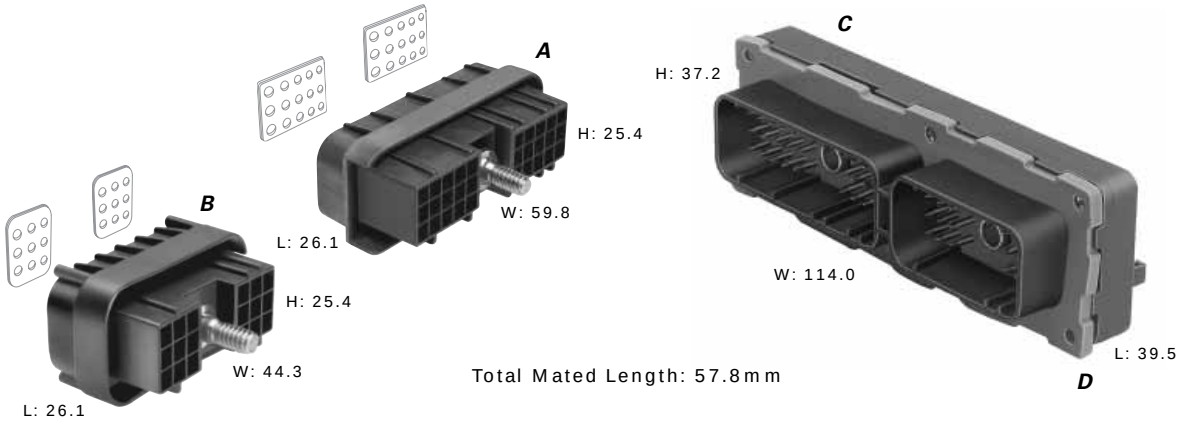


### A. Part No: 15492542

| | |
|---|---|
| Description: | Connector Assembly 30F |
| Size: | 26.1L x 25.4H x 59.8W |
| Color: | Black |
| Material: | PET 30% GF |
| Terminals: | See Page 2.98, 150 Pull-To-Seat Female |
| Plugs: | See Page 2.99, Cable Seal Plugs |

### B. Part No: 15492546

| | |
|---|---|
| Description: | Connector Assembly 18F |
| Size: | 26.1L x 25.4H x 44.3W |
| Color: | Black |
| Material: | PBT 30% GF |
| Terminals: | See Page 2.98, 150 Pull-To-Seat Female |
| Plugs: | See Page 2.99, Cable Seal Plugs |

### C. Part No: 12052130

| | |
|---|---|
| Description: | Connector Assembly 48M |
| Size: | 39.5L x 37.2H x 114.0W |
| Color: | Black |
| Material: | PET 30% GF |
| Note: | Shipping covers 12040940 and 12040542 included. |

### D. Part No: 12052131

| | |
|---|---|
| Description: | Flange Seal |
| Color: | Green |
| Material: | Silicone |

**NOTE:** Specifications in this catalog are for general reference only and are subject to change without notice. To verify product information, please contact a Delphi representative.

# 150 Header

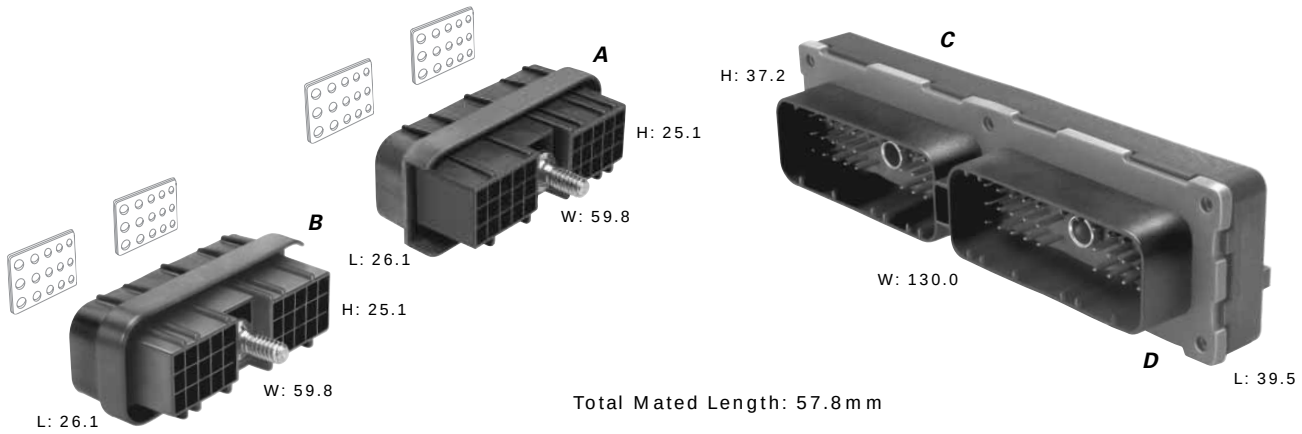


### A. Part No: 15492542

| | |
|---|---|
| Description: | Connector Assembly 30F |
| Size: | 26.1L x 25.1H x 59.8W |
| Color: | Black |
| Material: | PET 30% GF |
| Terminals: | See Page 2.98, 150 Pull-To-Seat Female |
| Plugs: | See Page 2.99, Cable Seal Plugs |

### B. Part No: 15492543

| | |
|---|---|
| Description: | Connector Assembly 30F |
| Size: | 26.1L x 25.1H x 59.8W |
| Color: | Black |
| Material: | PET 30% GF |
| Terminals: | See Page 2.98, 150 Pull-To-Seat Female |
| Plugs: | See Page 2.99, Cable Seal Plugs |

### C. Part No: 12034396

| | |
|---|---|
| Description: | Connector Assembly 60M |
| Size: | 39.5L x 37.2H x 130.0W |
| Color: | Black |
| Material: | PET 30% GF |
| Note: | Shipping cover 12040542 (2 Req'd.) included |

### D. Part No: 12040780

| | |
|---|---|
| Description: | Flange Seal |
| Color: | Green |
| Material: | Silicone |

**NOTE:** Specifications in this catalog are for general reference only and are subject to change without notice. To verify product information, please contact a Delphi representative.

# 150 Header

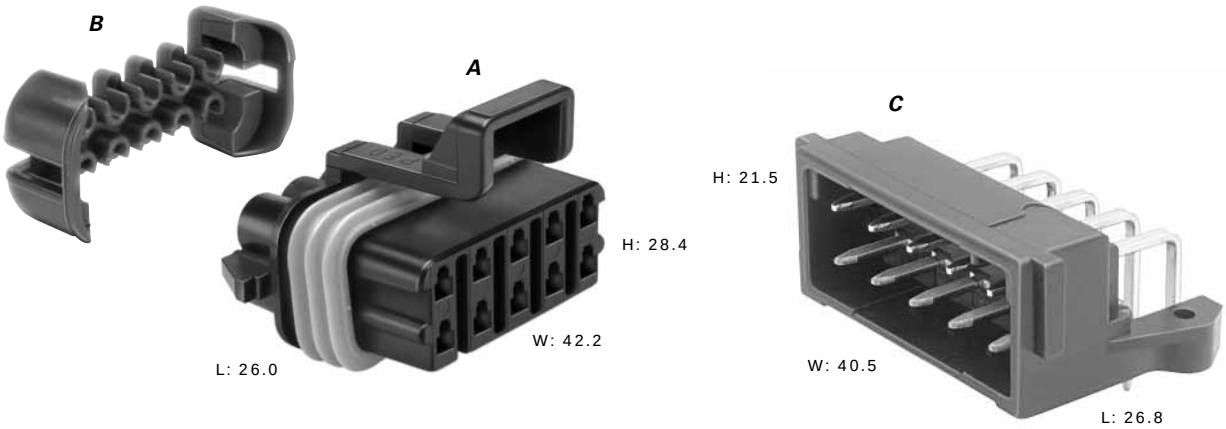


Total Mated Length: 46.7mm

### A. Part No: 12065425

| | |
|---|---|
| Description: | Connector Assembly 10F |
| Size: | 26.0L x 28.4H x 42.2W |
| Color: | Black |
| Material: | PA66 HS IM |
| Terminals: | See below, 150 Female Push to Seat |
| Seals/Plugs: | See below, 150 Metri-Pack |

### B. Part No: 12177082

| | |
|---|---|
| Description: | TPA |
| Color: | Md. Gray |
| Material: | PA66 HS IM |

### C. Part No: 12160446

| | |
|---|---|
| Description: | Connector Assembly 10M |
| Size: | 26.8L x 21.5H x 40.5W |
| Color: | Black |
| Material: | PBT 30% GF |
| Note: | Sealing Shroud and Locking Feature for Connector Assembly must be designed into mating device housing. |

**150 Female Terminals Sealed**

| Part # | Cable Range (mm²) | Material | Plating |
|---|---|---|---|
| 12048074 | 1.0-0.80-0.50 | Silicon Bronze | Tin |
| 12084200 | 0.50-0.35 | Silicon Bronze | Tin |
| 12160223 | 1.0-0.80 | Beryllium Copper | Silver/Nickel |
| 12160222 | 0.50-0.35 | Beryllium Copper | Silver/Nickel |

**150 Metri-Pack Cavity Plug***

| Part # | Cavity Inside Diameter | Material | Color |
|---|---|---|---|
| 12059168 | 5.2mm | Silicone | Dk. Red |

*Cavity plugs seal unused female and male cavities.

**150 Metri-Pack Cable Seals**

| Reel Part # | Loose Part # | Cable Dia. | Material | Color |
|---|---|---|---|---|
| 12052924 | 15324973 | 2.85-2.03 | Silicone | Dk. Red |
| 12089442 | 15324976 | 2.15-1.60 | Silicone | White |
| 12052925 | 15324974 | 1.70-1.29 | Silicone | Blue |
| 12124669 | 15324975 | 1.009-0.995 | Silicone | Tan |

**NOTE:** Specifications in this catalog are for general reference only and are subject to change without notice. To verify product information, please contact a Delphi representative.

# 280 Header

## Cross Sectional View

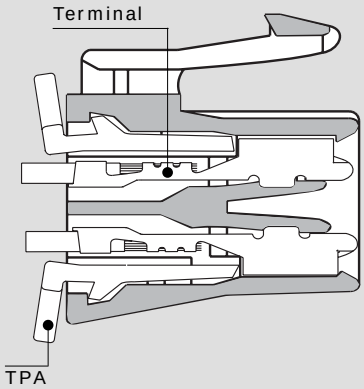


**Female Connector**

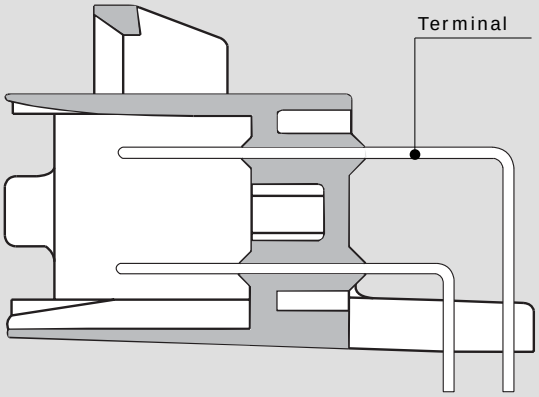


**Male Header Connector Assembly**

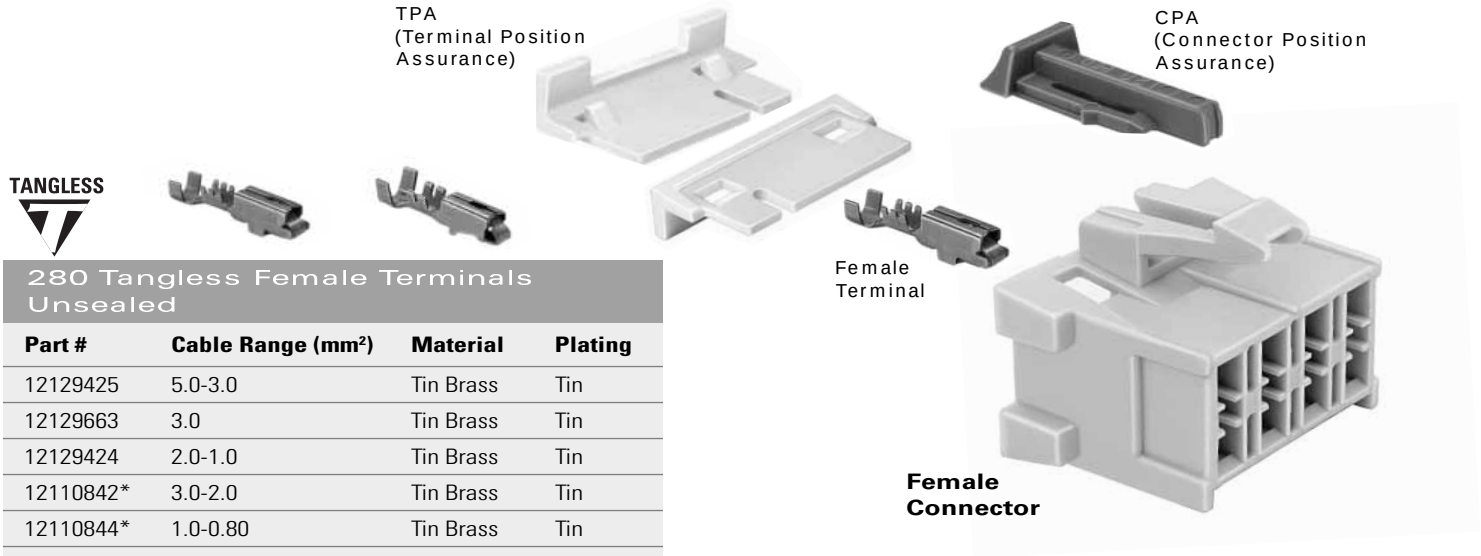


TANGLESS

### 280 Tangless Female Terminals Unsealed

| Part # | Cable Range (mm²) | Material | Plating |
|---|---|---|---|
| 12129425 | 5.0-3.0 | Tin Brass | Tin |
| 12129663 | 3.0 | Tin Brass | Tin |
| 12129424 | 2.0-1.0 | Tin Brass | Tin |
| 12110842* | 3.0-2.0 | Tin Brass | Tin |
| 12110844* | 1.0-0.80 | Tin Brass | Tin |
| 12110843* | 0.50-0.35 | Tin Brass | Tin |
| 12129061* | 2.0-0.35 | Tin Brass | Tin |

***Thin Stock**—Electrical current restrictions apply.

### 280 Female Terminals Unsealed

| Part # | Cable Range (mm²) | Material | Plating |
|---|---|---|---|
| 12015858 | 5.0-3.0 | Tin Brass | Tin |
| 12129494 | 3.0-2.0 | Tin Brass | Tin |
| 12034046 | 0.80-0.50 | Tin Brass | Tin |
| 12052217 | 0.50-0.35 | Tin Brass | Tin |
| 12162597* | 3.0-2.0 | Tin Brass | Tin |
| 12162595* | 1.0-0.80 | Tin Brass | Tin |
| 12162596* | 0.50-0.35 | Tin Brass | Tin |

***Thin Stock**—Electrical current restrictions apply.

### 280 Metri-Pack Female Connector Unsealed

| # Cavities | Connector | Color | Material | TPA |
|---|---|---|---|---|
| 4 | 12052856 | Black | PA66 HS IM | 15324456 |

TANGLESS

### 280 Metri-Pack Flexlock Female Connector Unsealed

| # Cavities | Connector | Color | Material | TPA |
|---|---|---|---|---|
| 8 | 12110626† | Lt. Gray | PA66 HS IM | 15324332 |

† Use p/n 15357040 to mate to audio amplifiers.

**NOTE:** Specifications in this catalog are for general reference only and are subject to change without notice. To verify product information, please contact a Delphi representative.

# 280 Header

## Unsealed System Application Information

CABLE RANGE (mm²): ..... 0.35-5.0

CURRENT RANGE (AMPS): ..... 0-30

TEMP RANGE °C: ..... -40 to 125

RESISTANCE: ..... <10mΩ@20mV

VOLTAGE DROP: ..... <3.0mV/amp

CENTERLINE SPACING (mm): ..... 6.9

BLADE WIDTH (mm): ..... 2.8

### 280 Series Terminals – Tin Plated

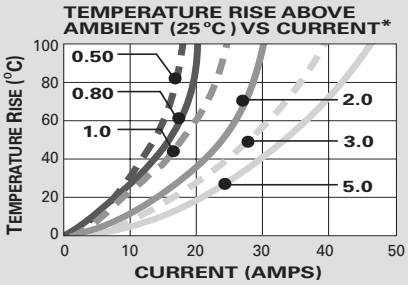


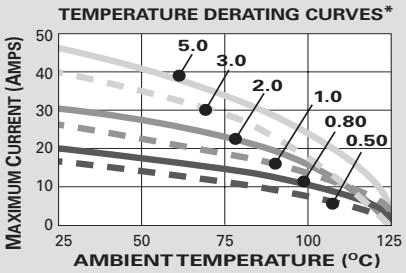


*The test data are based on single circuits in free space and were generated using a "Lumped Resistance" model. This model does not account for all of the variables that would be present in an actual application. For actual product performance, contact your regional support representative.

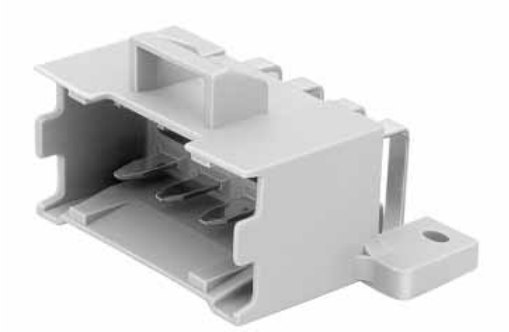

**Male Header Connector Assembly**

| 280 Metri-Pack Male Header Connector Assembly Unsealed | | | |
|---|---|---|---|
| **Pins** | **Connector** | **Color** | **Material** |
| 4 | 12110440 | Black | PA66 HS IM |

TANGLESS

| 280 Metri-Pack Male Header Connector Assembly Unsealed | | | |
|---|---|---|---|
| **Pins** | **Connector** | **Color** | **Material** |
| 8 | 12146724 | Gray | PBT 30% GF |

**SECTION NOTES:**

- Due to rigid tolerances of connector cavities, it is critical to meet all crimp dimensions as specified.

**NOTE:** Specifications in this catalog are for general reference only and are subject to change without notice. To verify product information, please contact a Delphi representative.

# 280 Header

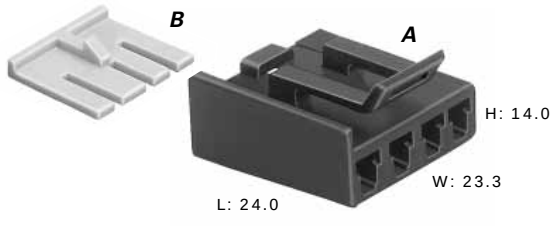

Total Mated Length: 40.4mm

### A. Part No: 12052856

| | |
|---|---|
| Description: | Connector 4F |
| Size: | 24.0L x 14.0H x 23.3W |
| Color: | Black |
| Material: | PA66 HS IM |
| Terminals: | See Page 2.104, 280 Female |

### B. Part No: 15324456

| | |
|---|---|
| Description: | TPA |
| Color: | Dk. Green |
| Material: | PA66 HS IM |

### C. Part No: 12110440

| | |
|---|---|
| Description: | Connector 4M |
| Size: | 25.7L x 17.9H x 26.7W |
| Color: | Black |
| Material: | PA66 HS IM |

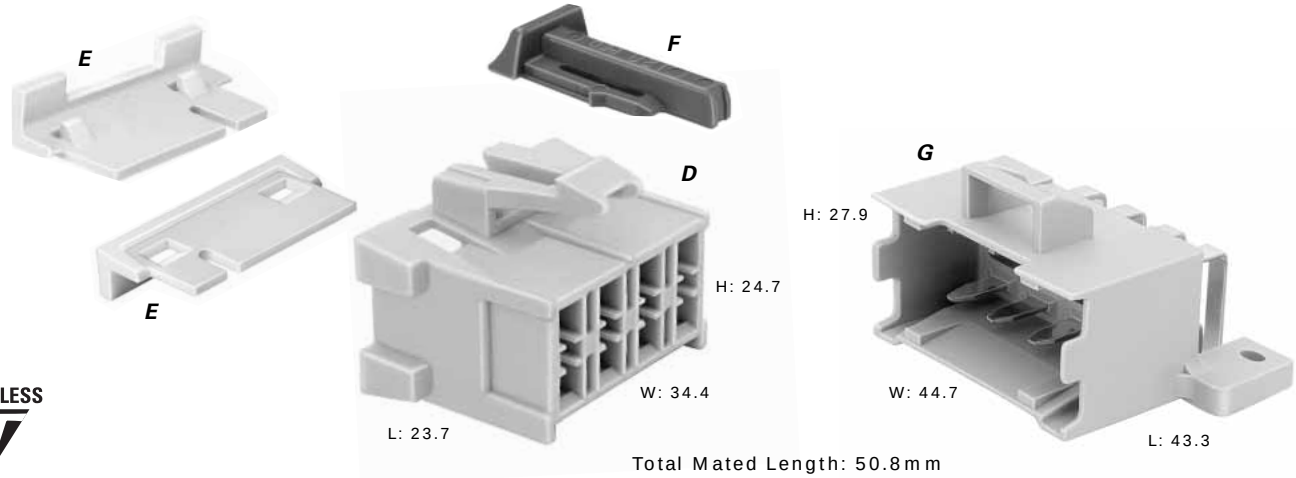


TANGLESS

Total Mated Length: 50.8mm

### D. Part No: 12110626† (Lt. Gray)
### 12129088 (Black)

| | |
|---|---|
| Description: | Connector 8F |
| Size: | 23.7L x 24.7H x 34.4W |
| Material: | PA66 HS IM |
| Terminals: | See Page 2.104, 280 Tangless Female |

### E. Part No: 15324332

| | |
|---|---|
| Description: | TPA |
| Number Req: | 2 |
| Color: | Natural |
| Material: | PA66 HS IM |

### F. Part No: 12052834

| | |
|---|---|
| Description: | CPA |
| Color: | Green |
| Material: | PP |

### G. Part No: 12146724 (Gray)
### 12146735 (Black)

| | |
|---|---|
| Description: | Connector 8M |
| Size: | 43.3L x 27.9H x 44.7W |
| Material: | PBT 30% GF |

† Use p/n 15357040 to mate to audio amplifiers.

**NOTE:** Specifications in this catalog are for general reference only and are subject to change without notice. To verify product information, please contact a Delphi representative.

# 100 In-Line, 100 Header & 100W Header

Available in electronic header and in-line connections, Micro-Pack Series connector is an excellent low energy system designed to meet the needs of high density applications.

Header connectors are available in straight, 90°, and 180° mounting to either flexible or hard board circuits. While inlines are ideally suited for limited space applications that do not require environmental protection, Micro-Pack Series products are extremely versatile.

The 100W Series is available in both electronic header and in-line connection systems. This Micro-Pack Series connection is an excellent low energy system designed to meet the needs of high density applications, requiring protection from environmental hazards. Delphi's 100W header connector mates to either flexible or hard circuit board applications.

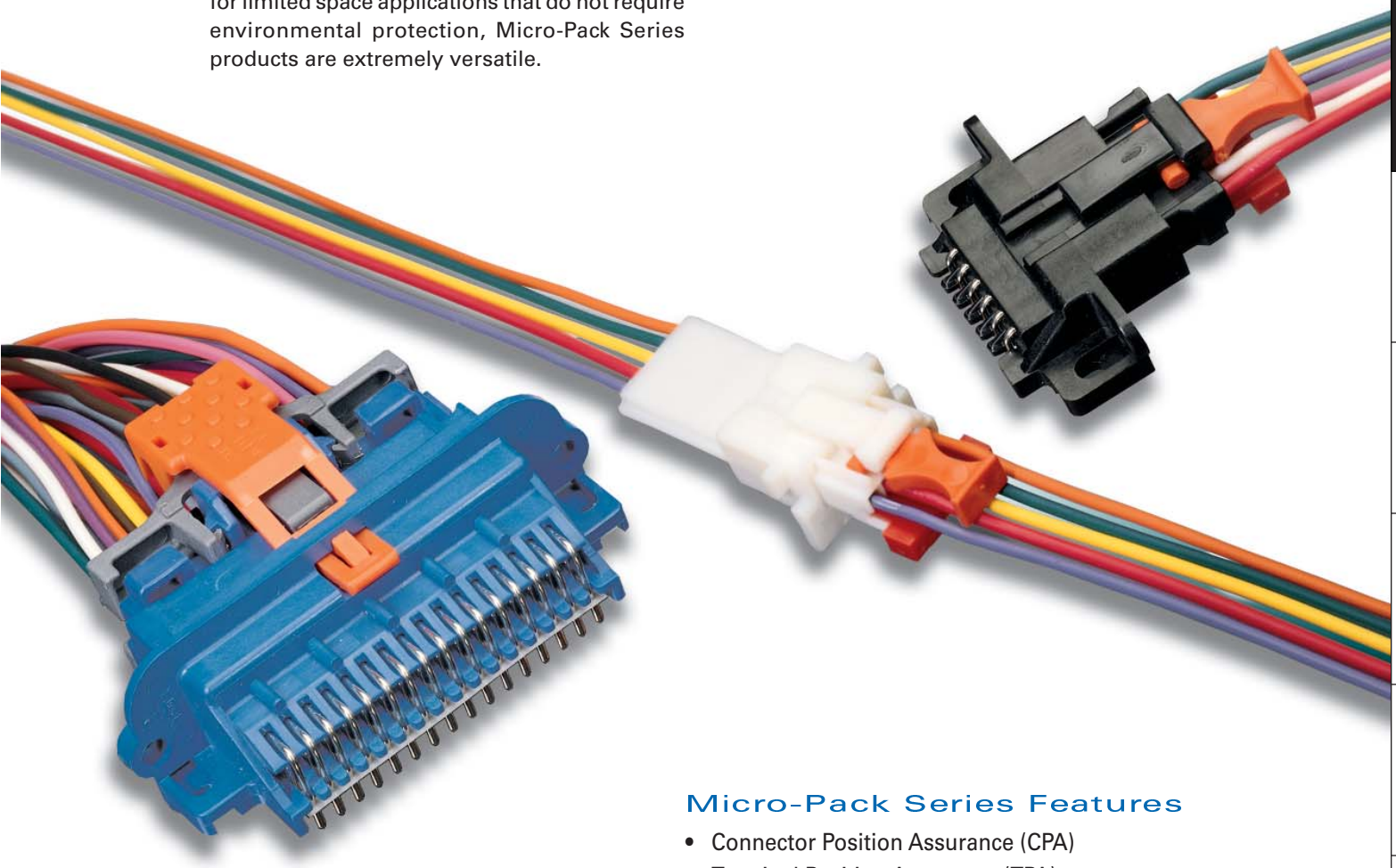

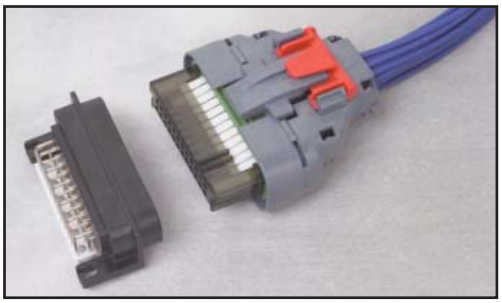

## Micro-Pack Series Features

- Connector Position Assurance (CPA)
- Terminal Position Assurance (TPA)
- 5 Amps continuous maximum current rating for Micro-Pack 100 Series
- 7.5 Amps continuous maximum current rating for Micro-Pack 100W Series
- Small overall dimensions
- High circuit density
- Low energy, low voltage capability
- -40°C to 85°C temperature range for Micro-Pack 100 Series
- -40°C to 125°C temperature range for Micro-Pack 100W Series

# 100 In-Line

## Cross Sectional View

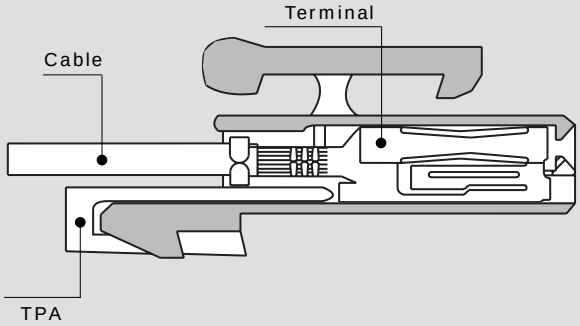


**Female Connector**

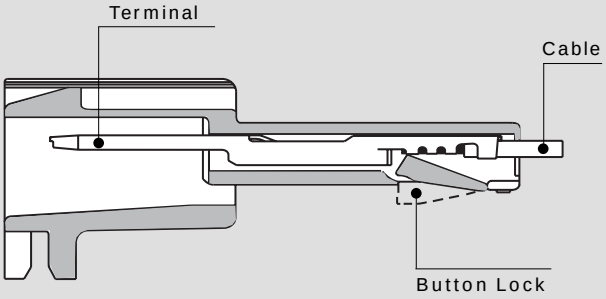


**Male Connector**

TPA
(Terminal Position
Assurance)

Female Terminal

CPA
(Connector Position
Assurance)

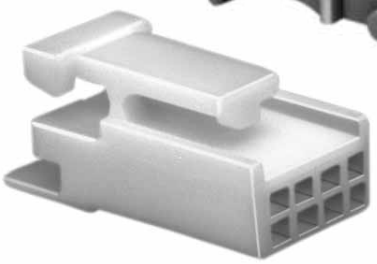

**Female Connector**

### Micro-Pack Female Terminals Unsealed

| Part # | Cable Range (mm²) | Material | Plating |
|---|---|---|---|
| 12146448 | 1.0-0.80 | Copper Nickel Alloy | Tin |
| 12146447 | 0.50-0.35 | Copper Nickel Alloy | Tin |

### Micro-Pack Female Connectors Unsealed

| # Cavities | Connector | Color | Material | TPA |
|---|---|---|---|---|
| 4 | 12066189 | Natural | PBT | 12059160 |
| 5 | 12064982 | Black | PBT | 12064987 |
| 7 | 12065873 | Black | PBT | 12065943 |
| 9 | 12064980 | Black | PBT | 12064986 |
| 10 | 12047531 | Black | PA66 HS IM | Button Lock |

**NOTE:** Specifications in this catalog are for general reference only and are subject to change without notice. To verify product information, please contact a Delphi representative.

# 100 In-Line

## Unsealed System Application Information

CABLE RANGE (mm²): ..... 0.35-1.0

CURRENT RANGE (AMPS): ..... 0-5

TEMP RANGE °C: ..... -40 to 85

RESISTANCE: ..... <10mΩ@20mV

VOLTAGE DROP: .... <10.0mV/amp

CENTERLINE SPACING (mm): ..... 3.0

TERMINAL DIAMETER (mm): ..... 1.0

### Micro-Pack 100 Terminals – Tin Plated

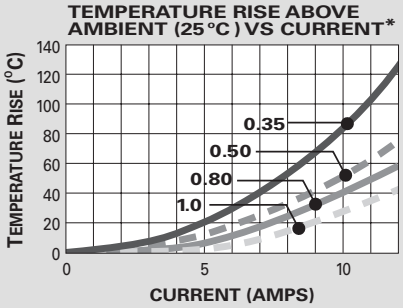


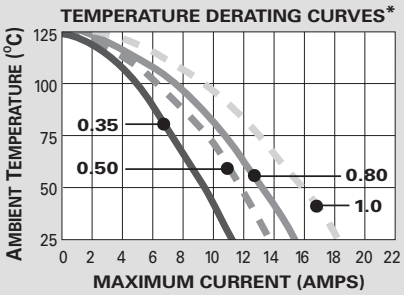


*The test data are based on single circuits in free space and were generated using a "Lumped Resistance" model. This model does not account for all of the variables that would be present in an actual application. For actual product performance, contact your regional support representative.

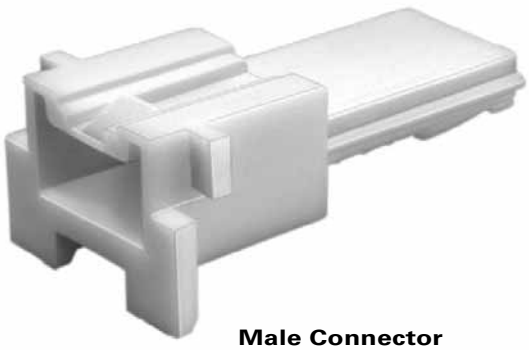

Male Connector

Male Terminal

### Micro-Pack Male Connectors Unsealed

| # Cavities | Connector | Color | Material | TPA |
|---|---|---|---|---|
| 4 | 12040903 | Natural | PBT | Button Lock |
| 5 | 12047829 | Black | PBT | Button Lock |
| 7 | 12065874 | Black | PBT | Button Lock |
| 9 | 12040905 | Black | PBT | Button Lock |
| 10 | 12047814 | Black | PBT | Button Lock |

### Micro-Pack Male Terminals Unsealed

| Part # | Cable Range (mm²) | Material | Plating |
|---|---|---|---|
| 12084449 | 0.80-0.50 | Tin Brass | Tin |
| 12040902 | 0.35 | Tin Brass | Tin |

**SECTION NOTES:**

- Due to rigid tolerances of connector cavities, it is critical to meet all crimp dimensions as specified.

**NOTE:** Specifications in this catalog are for general reference only and are subject to change without notice. To verify product information, please contact a Delphi representative.

# 100 In-Line

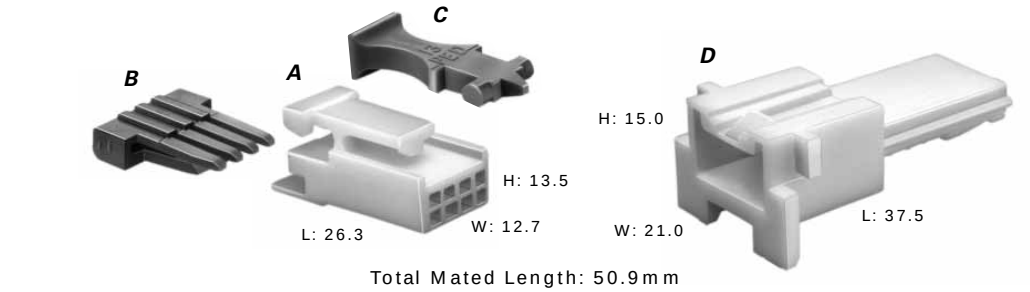


Total Mated Length: 50.9mm

### A. Part No: 12066189

| | |
|---|---|
| Description: | Connector 4F |
| Size: | 26.3L x 13.5H x 12.7W |
| Color: | Natural |
| Material: | PBT |
| Terminals: | See Page 3.2 |

### B. Part No: 12059160

| | |
|---|---|
| Description: | TPA |
| Color: | Red |
| Material: | PA6 |

### C. Part No: 12064989

| | |
|---|---|
| Description: | CPA |
| Color: | Orange |
| Material: | PP IM |

### D. Part No: 12040903

| | |
|---|---|
| Description: | Connector 4M - with Button Lock |
| Size: | 37.5L x 15.0H x 21.0W |
| Color: | Natural |
| Material: | PBT |
| Terminals: | See Page 3.3 |

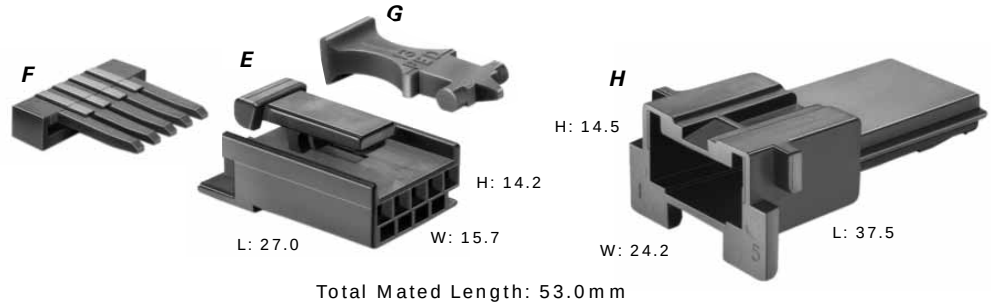


Total Mated Length: 53.0mm

### E. Part No: 12064982 (Black)
### 12064983 (Natural)

| | |
|---|---|
| Description: | Connector 5F |
| Size: | 27.0L x 14.2H x 15.7W |
| Material: | PBT |
| Terminals: | See Page 3.2 |

### F. Part No: 12064987

| | |
|---|---|
| Description: | TPA |
| Color: | Red |
| Material: | PA6 |

### G. Part No: 12064989

| | |
|---|---|
| Description: | CPA |
| Color: | Orange |
| Material: | PP IM |

### H. Part No: 12047829 (Black)
### 12047815 (Natural)

| | |
|---|---|
| Description: | Connector 5M - with Button Lock |
| Size: | 37.5L x 14.5H x 24.2W |
| Material: | PBT |
| Terminals: | See Page 3.3 |

**NOTE:** Specifications in this catalog are for general reference only and are subject to change without notice. To verify product information, please contact a Delphi representative.

# 100 In-Line

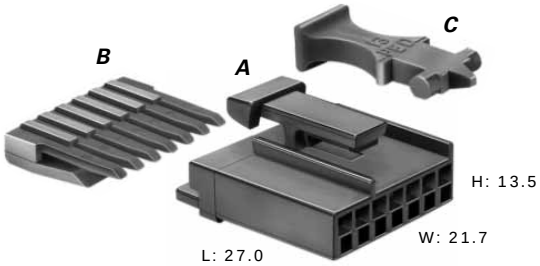


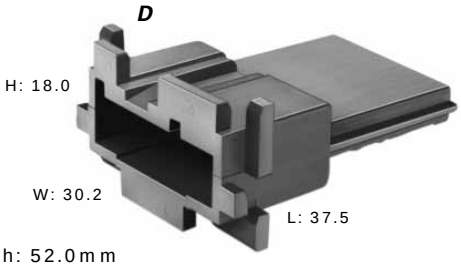


Total Mated Length: 52.0mm

### A. Part No: 12065873

| | |
|---|---|
| Description: | Connector 7F |
| Size: | 27.0L x 13.5H x 21.7W |
| Color: | Black |
| Material: | PBT |
| Terminals: | See Page 3.2 |

### B. Part No: 12065943

| | |
|---|---|
| Description: | TPA |
| Color: | Red |
| Material: | PA6 |

### C. Part No: 12064989

| | |
|---|---|
| Description: | CPA |
| Color: | Orange |
| Material: | PP IM |

### D. Part No: 12065874

| | |
|---|---|
| Description: | Connector 7M - with Button Lock |
| Size: | 37.5L x 18.0H x 30.2W |
| Color: | Black |
| Material: | PBT |
| Terminals: | See Page 3.3 |

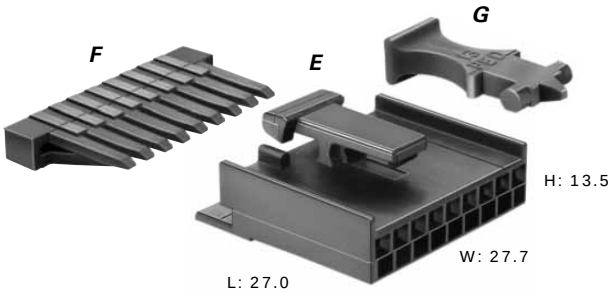


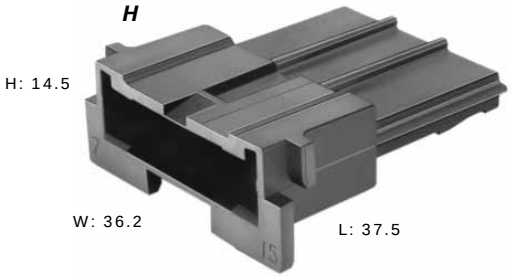


Total Mated Length: 52.0mm

### E. Part No: 12064980

| | |
|---|---|
| Description: | Connector 9F |
| Size: | 27.0L x 13.5H x 27.7W |
| Color: | Black |
| Material: | PBT |
| Terminals: | See Page 3.2 |

### F. Part No: 12064986

| | |
|---|---|
| Description: | TPA |
| Color: | Red |
| Material: | PA66 HS IM |

### G. Part No: 12064989

| | |
|---|---|
| Description: | CPA |
| Color: | Orange |
| Material: | PP IM |

### H. Part No: 12040905

| | |
|---|---|
| Description: | Connector 9M - with Button Lock |
| Size: | 37.5L x 18.0H x 36.2W |
| Color: | Black |
| Material: | PBT |
| Terminals: | See Page 3.3 |

**NOTE:** Specifications in this catalog are for general reference only and are subject to change without notice. To verify product information, please contact a Delphi representative.

# 100 In-Line

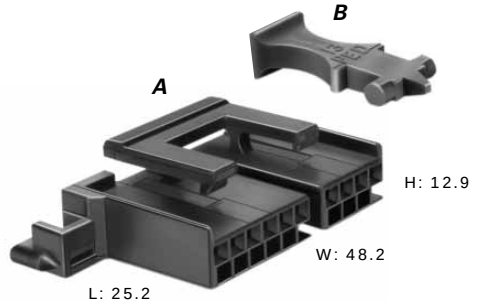


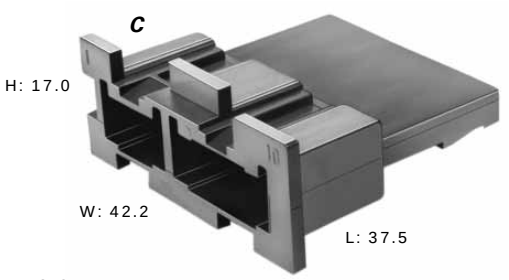


Total Mated Length: 48.0mm

### A. Part No: 12047531

| | |
|---|---|
| Description: | Connector 10F - with Button Lock |
| Size: | 25.2L x 12.9H x 48.2W |
| Color: | Black |
| Material: | PA66 HS IM |
| Terminals: | See Page 3.2 |

### B. Part No: 12064989

| | |
|---|---|
| Description: | CPA |
| Color: | Orange |
| Material: | PP IM |

### C. Part No: 12047814

| | |
|---|---|
| Description: | Connector 10M - with Button Lock |
| Size: | 37.5L x 17.0H x 42.2W |
| Color: | Black |
| Material: | PBT |
| Terminals: | See Page 3.3 |

**NOTE:** Specifications in this catalog are for general reference only and are subject to change without notice. To verify product information, please contact a Delphi representative.

# 100 Header

## Cross Sectional View

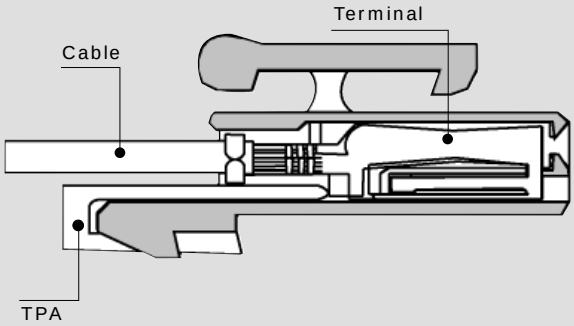


**Female Connector**

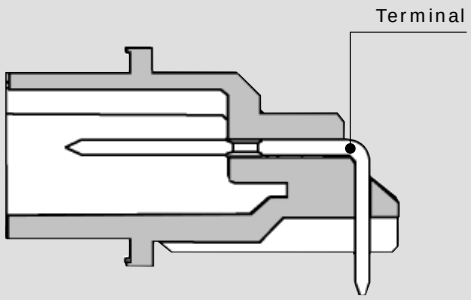


**Male Header Connector Assembly**

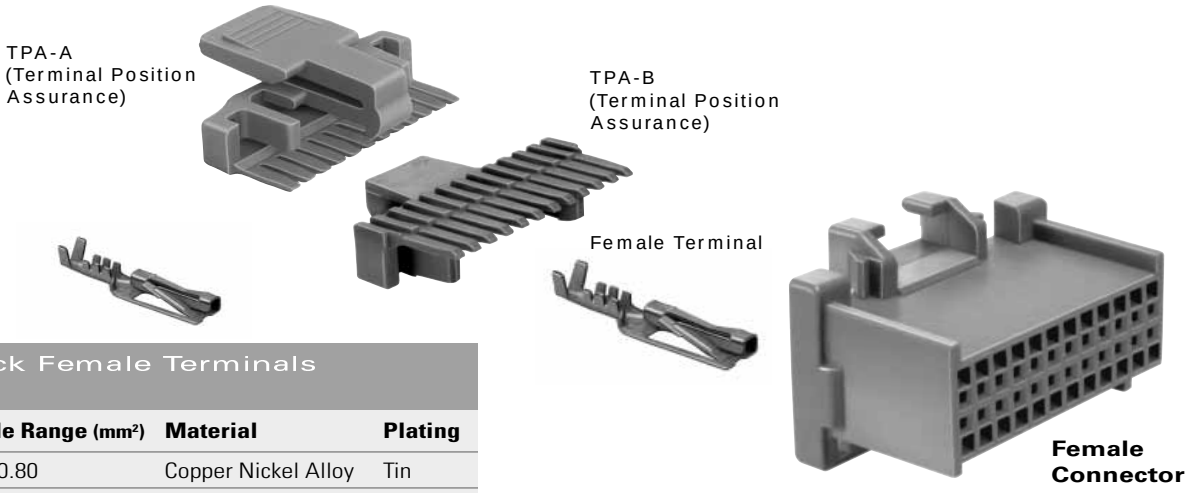


### Micro-Pack Female Terminals Unsealed

| Part # | Cable Range (mm²) | Material | Plating |
|---|---|---|---|
| 12146448 | 1.0-0.80 | Copper Nickel Alloy | Tin |
| 12146447 | 0.50-0.35 | Copper Nickel Alloy | Tin |

Nickel/Gold plating available.

### Micro-Pack Female Connectors Unsealed

| # Cavities | Connector | Color | Material | TPA-A | TPA-B |
|---|---|---|---|---|---|
| 6way: 6 | 12064993 | Black | PBT | 12066170 | – |
| 10way: 4 | 12066189 | Natural | PBT | 12059160 | – |
| 6 | 12064993 | Black | PBT | 12066170 | – |
| 12way: 12 | 12064799 | Black | PBT 30% GF | 12064822 | 12064823 |
| 13way: 4 | 12066189 | Natural | PBT | 12059160 | – |
| 9 | 12066130 | Natural | PBT | 12064986 | – |
| 16way: 16 | 12110259 | Green | PBT 30% GF | 12048344 | 12048345 |
| 20way: 10 | 12047531 | Black | PA66 HS IM | Button Lock | – |
| 10 | 12065785 | Lt. Gray | PA66 HS IM | Button Lock | – |
| 24way: 24 | 12110088 | Gray | PBT 30% GF | 12047900 | 12047901 |
| 32way: 32 | 12110113 | Dk. Red | PBT 30% GF | 12045889 | 12045890 |
| 32way: 32 | 12110207 | Lt. Blue | PBT 30% GF | 12045889 | 12045890 |
| 40way: 16 | 12084945 | Gray | PBT 30% GF | 12048344 | 12048345 |
| 24 | 12110088 | Gray | PBT 30% GF | 12047900 | 12047901 |
| 48way: 24 | 12110244 | Pink | PBT 30% GF | 12047900 | 12047901 |
| 24 | 12110206 | Lt. Blue | PBT 30% GF | 12047900 | 12047901 |
| 56way: 24 | 12110206 | Lt. Blue | PBT 30% GF | 12047900 | 12047901 |
| 32 | 12110207 | Lt. Blue | PBT 30% GF | 12045889 | 12045890 |
| 64way: 16 | 12084945 | Gray | PBT 30% GF | 12048344 | 12048345 |
| 24 | 12110088 | Gray | PBT 30% GF | 12047900 | 12047901 |
| 24 | 12110244 | Pink | PBT 30% GF | 12047900 | 12047901 |
| **Mixed** | | | | | |
| 32way: 8 | 12110626† | Lt. Gray | PA66 HS IM | 15324332 | – |
| 24 | 12110088 | Gray | PBT 30% GF | 12047900 | 12047901 |

† Use p/n 15357040 to mate to audio amplifiers.

**NOTE:** Specifications in this catalog are for general reference only and are subject to change without notice. To verify product information, please contact a Delphi representative.

# 100 Header

## Unsealed System Application Information

CABLE RANGE (mm²): ..... 0.35-1.0

CURRENT RANGE (AMPS): ..... 0-5

TEMP RANGE °C: ..... -40 to 85

RESISTANCE: ..... <10mΩ@20mV

VOLTAGE DROP: .... <10.0mV/amp

CENTERLINE SPACING (mm): ..... 3.0

TERMINAL DIAMETER (mm): ..... 1.0

### Micro-Pack 100 Terminals – Tin Plated

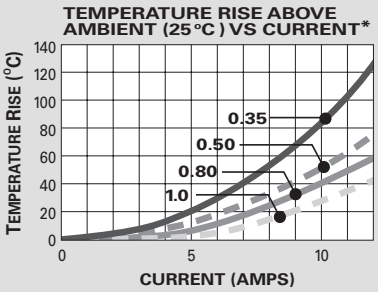


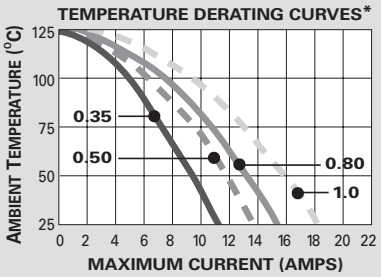


*The test data are based on single circuits in free space and were generated using a "Lumped Resistance" model. This model does not account for all of the variables that would be present in an actual application. For actual product performance, contact your regional support representative.

CPA
(Connector Position Assurance)

**Male Header Connector Assembly**

**SECTION NOTES:**

- Due to rigid tolerances of connector cavities, it is critical to meet all crimp dimensions as specified.
- Different color and connector indexing features are also available.
- Low profile and right angle TPAs also available.

### Micro-Pack Male Header Connector Assemblies Unsealed

| # Pins | Connector | Color | Material |
|---|---|---|---|
| 6 | 12065870 | Black | PBT 30% GF |
| 10 | 12065647 | Black | PBT 30% GF |
| 12 | 12064798 | Black | PBT 30% GF |
| 13 | 12066307 | Black | PBT 30% GF |
| 16 | 12110261 | Green | PBT 30% GF |
| 20* | 12089852 | Black | PBT 30% GF |
| 24 | 12092886 | Gray | PBT 30% GF |

| # Pins | Connector | Color | Material |
|---|---|---|---|
| 32* | 12129340 | Dk. Red | PBT 30% GF |
| 32* | 12110323 | Lt. Blue | PBT 30% GF |
| 40 | 12191050 | Gray | PBT 30% GF |
| 48 | 12191140 | Natural | PBT 30% GF |
| 56* | 12110209 | Lt. Blue | PBT 30% GF |
| 64 | 12160861 | Black | PBT 30% GF |
| **Mixed** | | | |
| 32 | 15357042 | Gray | PBT 30% GF |

Terminals included in connector assembly.
* Gold plating available.

**NOTE:** Specifications in this catalog are for general reference only and are subject to change without notice. To verify product information, please contact a Delphi representative.

# 100 Header

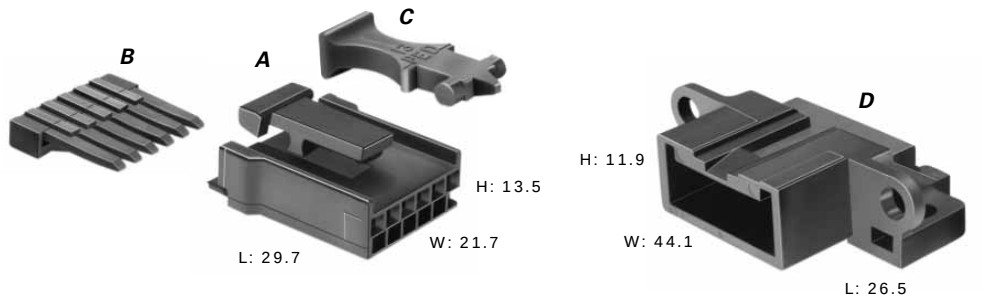


Total Mated Length: 49.7mm

### A. Part No: 12064993

| | |
|---|---|
| Description: | Connector 6F |
| Size: | 29.7L x 13.5H x 21.7W |
| Color: | Black |
| Material: | PBT |
| Terminals: | See Page 3.8 |

### B. Part No: 12066170

| | |
|---|---|
| Description: | TPA |
| Color: | Red |
| Material: | PA6 |

### C. Part No: 12064989

| | |
|---|---|
| Description: | CPA |
| Color: | Orange |
| Material: | PP IM |

### D. Part No: 12065870

| | |
|---|---|
| Description: | Connector Assembly 6M |
| Size: | 26.5L x 11.9H x 44.1W |
| Color: | Black |
| Material: | PBT 30% GF |

**NOTE:** Specifications in this catalog are for general reference only and are subject to change without notice. To verify product information, please contact a Delphi representative.

# 100 Header

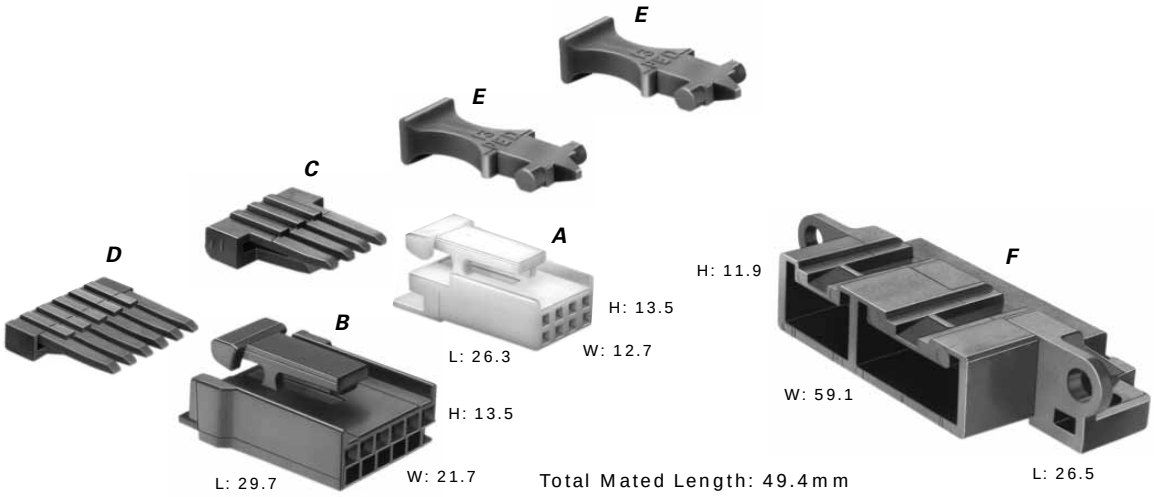


### A. Part No: 12066189

| | |
|---|---|
| Description: | Connector 4F |
| Size: | 26.3L x 13.5H x 12.7W |
| Color: | Natural |
| Material: | PBT |
| Terminals: | See Page 3.8 |

### B. Part No: 12064993

| | |
|---|---|
| Description: | Connector 6F |
| Size: | 29.7L x 13.5H x 21.7W |
| Color: | Black |
| Material: | PBT |
| Terminals: | See Page 3.8 |

### C. Part No: 12059160

| | |
|---|---|
| Description: | TPA |
| Color: | Red |
| Material: | PA6 |

### D. Part No: 12066170

| | |
|---|---|
| Description: | TPA |
| Color: | Red |
| Material: | PA6 |

### E. Part No: 12064989

| | |
|---|---|
| Description: | CPA |
| Number Req: | 2 |
| Color: | Orange |
| Material: | PP IM |

### F. Part No: 12065647

| | |
|---|---|
| Description: | Connector Assembly 10M |
| Size: | 26.5L x 11.9H x 59.1W |
| Color: | Black |
| Material: | PBT 30% GF |

**NOTE:** Specifications in this catalog are for general reference only and are subject to change without notice. To verify product information, please contact a Delphi representative.

# 100 Header

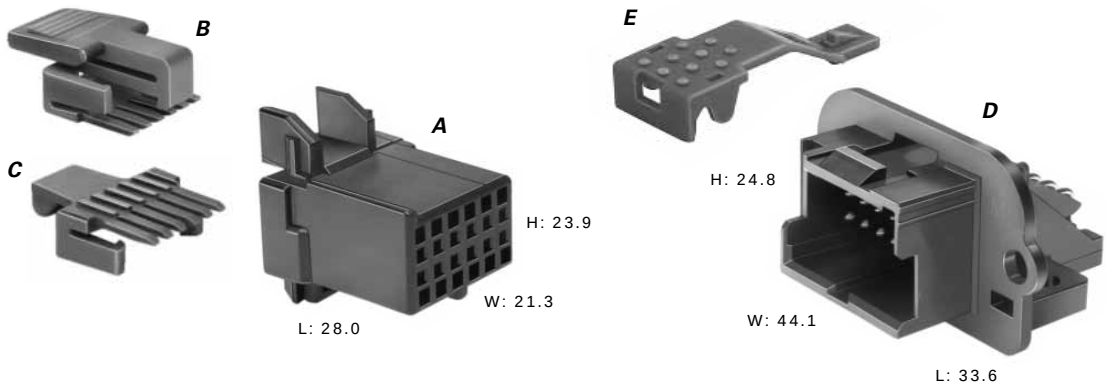


Total Mated Length: 39.1mm

### A. Part No: 12064799

| | |
|---|---|
| Description: | Connector 12F |
| Size: | 28.0L x 23.9H x 21.3W |
| Color: | Black |
| Material: | PBT 30% GF |
| Terminals: | See Page 3.8 |

### B. Part No: 12064822

| | |
|---|---|
| Description: | TPA |
| Color: | Md. Gray |
| Material: | PA66 HS IM |

### C. Part No: 12064823

| | |
|---|---|
| Description: | TPA |
| Color: | Md. Gray |
| Material: | PA66 HS IM |

### D. Part No: 12064798

| | |
|---|---|
| Description: | Connector Assembly 12M |
| Size: | 33.6L x 24.8H x 44.1W |
| Color: | Black |
| Material: | PBT 30% GF |

### E. Part No: 12077899

| | |
|---|---|
| Description: | CPA |
| Color: | Orange |
| Material: | PP IM |

**NOTE:** Specifications in this catalog are for general reference only and are subject to change without notice. To verify product information, please contact a Delphi representative.

# 100 Header

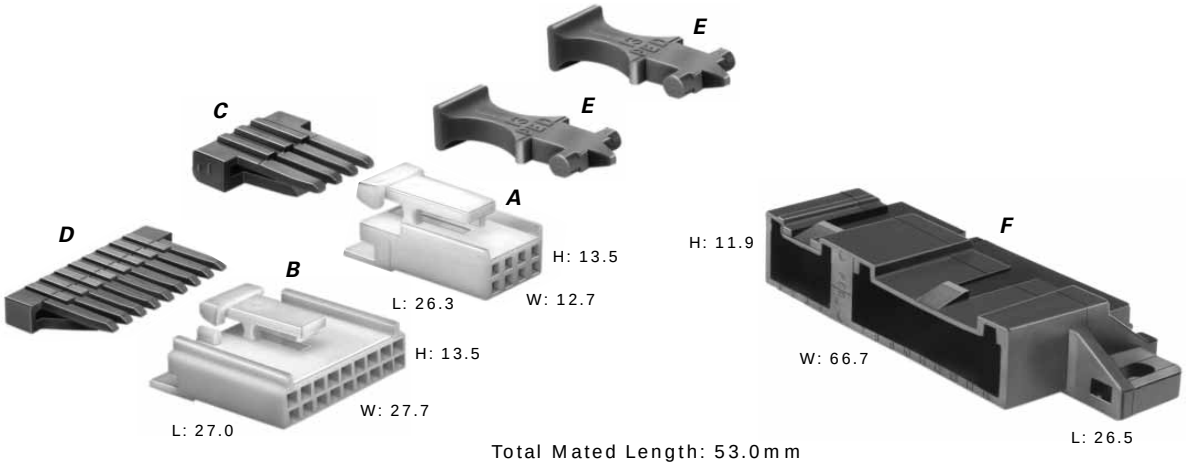


### A. Part No: 12066189

| | |
|---|---|
| Description: | Connector 4F |
| Size: | 26.3L x 13.5H x 12.7W |
| Color: | Natural |
| Material: | PBT |
| Terminal: | See Page 3.8 |

### B. Part No: 12066130

| | |
|---|---|
| Description: | Connector 9F |
| Size: | 27.0L x 13.5H x 27.7W |
| Color: | Natural |
| Material: | PBT |
| Terminals: | See Page 3.8 |

### C. Part No: 12059160

| | |
|---|---|
| Description: | TPA |
| Color: | Red |
| Material: | PA6 |

### D. Part No: 12064986

| | |
|---|---|
| Description: | TPA |
| Color: | Red |
| Material: | PA66 HS IM |

### E. Part No: 12064989

| | |
|---|---|
| Description: | CPA |
| Number Req: | 2 |
| Color: | Orange |
| Material: | PP IM |

### F. Part No: 12066307

| | |
|---|---|
| Description: | Connector Assembly 13M |
| Size: | 26.5L x 11.9H x 66.7W |
| Color: | Black |
| Material: | PBT 30% GF |

**NOTE:** Specifications in this catalog are for general reference only and are subject to change without notice. To verify product information, please contact a Delphi representative.

# 100 Header

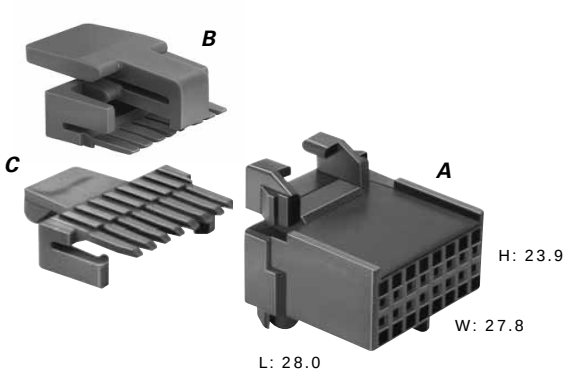


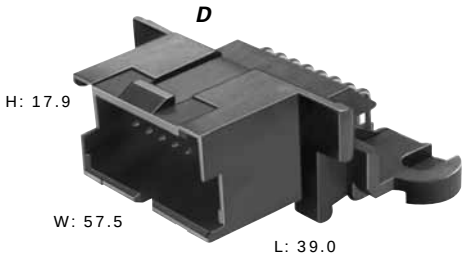


Total Mated Length: 60.4mm

**A. Part No: 12110259*† (Green)**
**12084944*† (Black)**
**12084945*† (Gray)**

| | |
|---|---|
| Description: | Connector 16F |
| Size: | 28.0L x 23.9H x 27.8W |
| Material: | PBT 30% GF |
| Terminals: | See Page 3.8 |

*Different indexing feature.

**B. Part No: 12048344**

| | |
|---|---|
| Description: | TPA |
| Color: | Blue |
| Material: | PA66 HS IM |

**C. Part No: 12048345**

| | |
|---|---|
| Description: | TPA |
| Color: | Blue |
| Material: | PA66 HS IM |

† For harness assemblies, use either latching TPA 12048344 or low profile TPA 12065463.

**D. Part No: 12110261* (Green)**
**12084948* (Black)**
**12084949* (Gray)**

| | |
|---|---|
| Description: | Connector Assembly 16M |
| Size: | 39.0L x 17.9H x 57.5W |
| Material: | PBT 30% GF |

*Different indexing feature.

**NOTE:** Specifications in this catalog are for general reference only and are subject to change without notice. To verify product information, please contact a Delphi representative.

# 100 Header

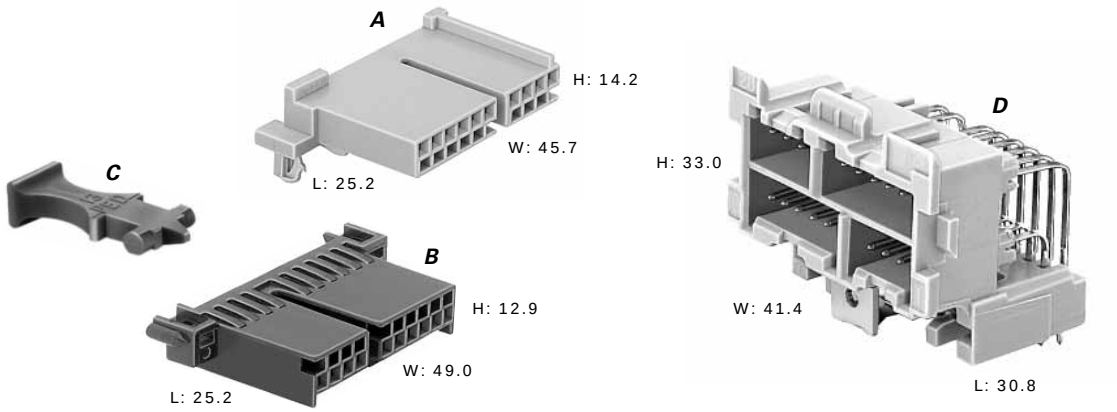


Total Mated Length: 55.3mm

### A. Part No: 12065785

| | |
|---|---|
| Description: | Connector 10F - with Button Lock |
| Size: | 25.2L x 14.2H x 45.7W |
| Color: | Lt. Gray |
| Material: | PA66 HS IM |
| Terminals: | See Page 3.8 |

### B. Part No: 12047531

| | |
|---|---|
| Description: | Connector 10F - with Button Lock |
| Size: | 25.2L x 12.9H x 49.0W |
| Color: | Black |
| Material: | PA66 HS IM |
| Terminals: | See Page 3.8 |

### C. Part No: 12064989

| | |
|---|---|
| Description: | CPA |
| Color: | Orange |
| Material: | PP IM |

### D. Part No: 12089852

| | |
|---|---|
| Description: | Connector Assembly 20M |
| Size: | 30.8L x 33.0H x 41.4W |
| Color: | Black |
| Material: | PBT 30% GF |

**NOTE:** Specifications in this catalog are for general reference only and are subject to change without notice. To verify product information, please contact a Delphi representative.

# 100 Header

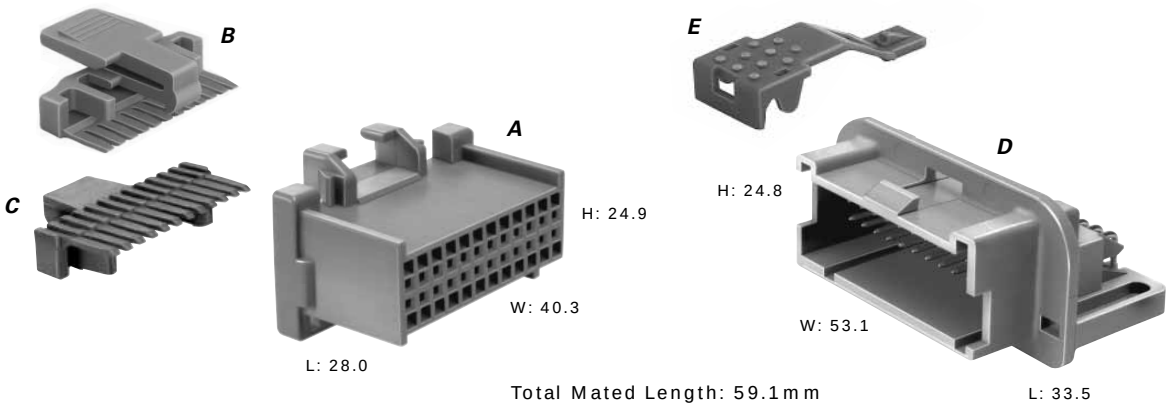


### A. Part No: 12110088†

| | |
|---|---|
| Description: | Connector 24F |
| Size: | 28.0L x 24.9H x 40.3W |
| Color: | Gray |
| Material: | PBT 30% GF |
| Terminals: | See Page 3.8 |

### B. Part No: 12047900

| | |
|---|---|
| Description: | TPA |
| Color: | Blue |
| Material: | PA66 HS IM |

### C. Part No: 12047901

| | |
|---|---|
| Description: | TPA |
| Color: | Blue |
| Material: | PA66 HS IM |

† For harness assemblies, use either latching TPA 12047900 or low profile TPA 12065209.

### D. Part No: 12092886

| | |
|---|---|
| Description: | Connector Assembly 24M |
| Size: | 33.5L x 24.8H x 53.1W |
| Color: | Gray |
| Material: | PBT 30% GF |

### E. Part No: 12077899

| | |
|---|---|
| Description: | CPA |
| Color: | Orange |
| Material: | PP IM |

**NOTE:** Specifications in this catalog are for general reference only and are subject to change without notice. To verify product information, please contact a Delphi representative.

# 100 Header

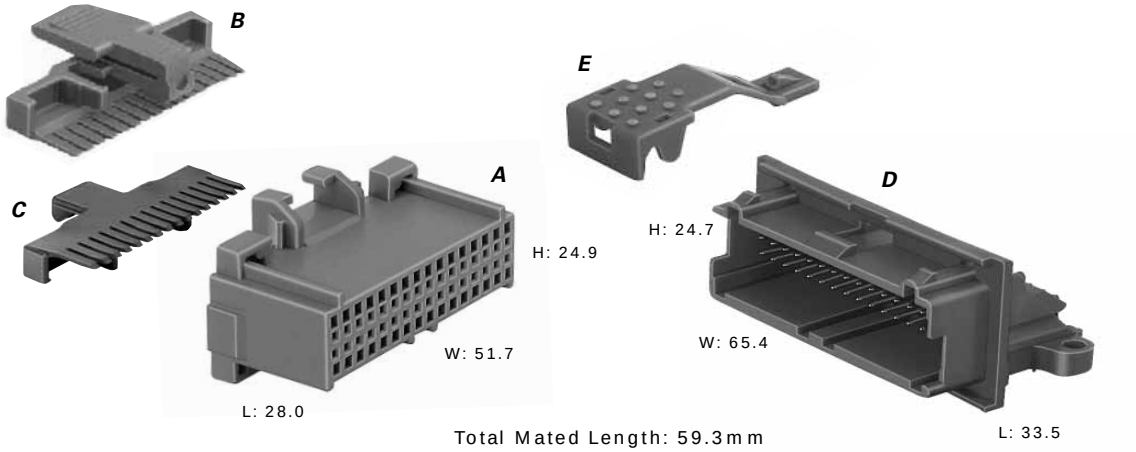


Total Mated Length: 59.3mm

**A. Part No: 12110113*† (Dk. Red)**
**12110114*† (Natural)**
**12110115*† (Dk. Blue)**
**12110112*† (Tan)**

| | |
|---|---|
| Description: | Connector 32F |
| Size: | 28.0L x 24.9H x 51.7W |
| Material: | PBT 30% GF |
| Terminals: | See Page 3.8 |

*Different indexing feature.

**B. Part No: 12045889**

| | |
|---|---|
| Description: | TPA |
| Color: | Blue |
| Material: | PA66 HS IM |

**C. Part No: 12045890**

| | |
|---|---|
| Description: | TPA |
| Color: | Md. Gray |
| Material: | PA66 HS IM |

† If mating connector to gold pins, gold pins must be used.
If mating to tin pins, tin pins must be used.

**D. Part No: 12129340* (Dk. Red)**
**12129341* (Natural)**
**12129342* (Dk. Blue)**
**12129369* (Tan)**

| | |
|---|---|
| Description: | Connector Assembly 32M |
| Size: | 33.5L x 24.7H x 65.4W |
| Material: | PBT 30% GF |

*Different indexing feature.

**E. Part No: 12077899**

| | |
|---|---|
| Description: | CPA |
| Color: | Orange |
| Material: | PP IM |

**NOTE:** Specifications in this catalog are for general reference only and are subject to change without notice. To verify product information, please contact a Delphi representative.

# 100 Header

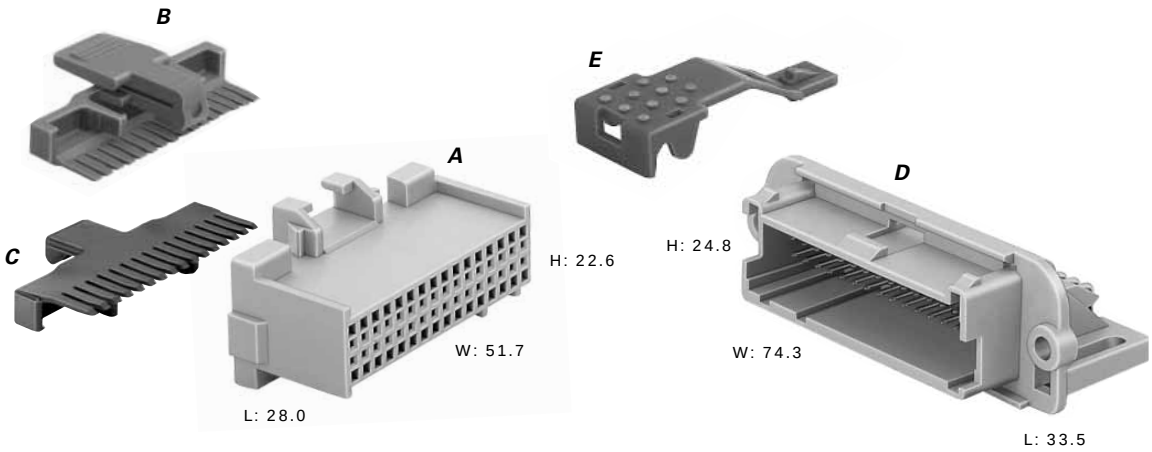


Total Mated Length: 59.3mm

### A. Part No: 12110207†

| | |
|---|---|
| Description: | Connector 32F |
| Size: | 28.0L x 22.6H x 51.7W |
| Color: | Lt. Blue |
| Material: | PBT 30% GF |
| Terminals: | See Page 3.8 |

### B. Part No: 12045889

| | |
|---|---|
| Description: | TPA |
| Color: | Blue |
| Material: | PA66 HS IM |

### C. Part No: 12045890

| | |
|---|---|
| Description: | TPA |
| Color: | Md. Gray |
| Material: | PA66 HS IM |

† If mating connector to gold pins, gold pins must be used.
If mating to tin pins, tin pins must be used.

### D. Part No: 12110323

| | |
|---|---|
| Description: | Connector Assembly 32M |
| Size: | 33.5L x 24.8H x 74.3W |
| Color: | Lt. Blue |
| Material: | PBT 30% GF |

### E. Part No: 12077899

| | |
|---|---|
| Description: | CPA |
| Color: | Orange |
| Material: | PP IM |

**NOTE:** Specifications in this catalog are for general reference only and are subject to change without notice. To verify product information, please contact a Delphi representative.

# 100 Header

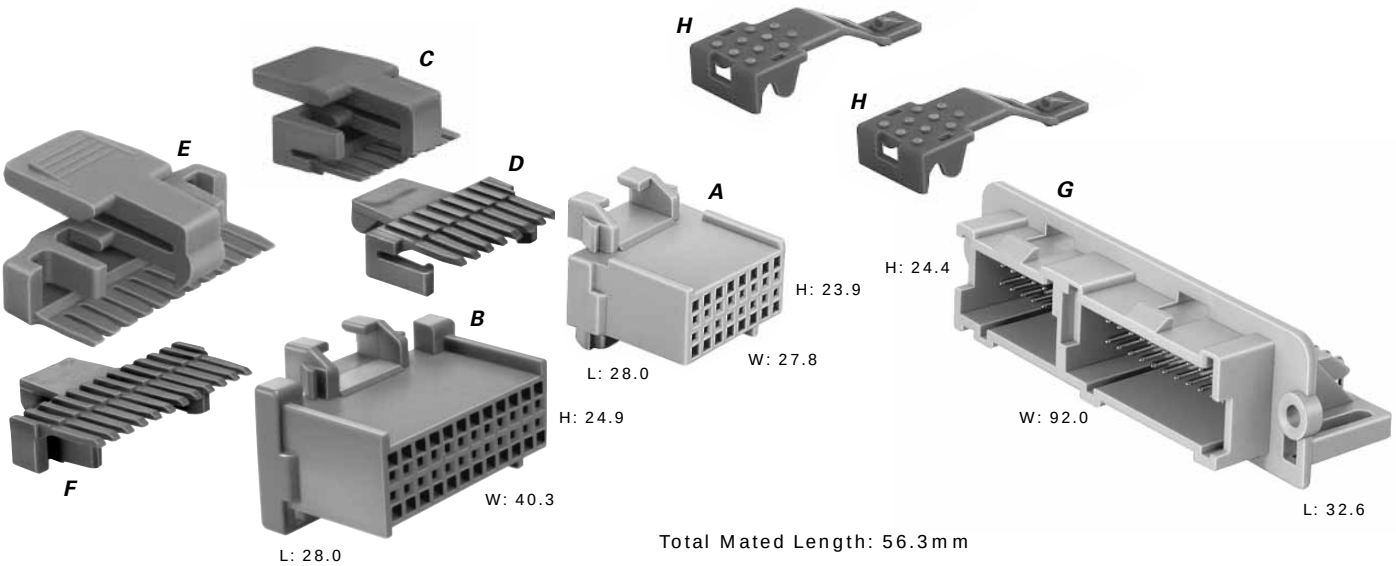


### A. Part No: 12084945

| | |
|---|---|
| Description: | Connector 16F |
| Size: | 28.0L x 23.9H x 27.8W |
| Color: | Gray |
| Material: | PBT 30% GF |
| Terminals: | See Page 3.8 |

### B. Part No: 12110088

| | |
|---|---|
| Description: | Connector 24F |
| Size: | 28.0L x 24.9H x 40.3W |
| Color: | Gray |
| Material: | PBT 30% GF |
| Terminals: | See Page 3.8 |

### C. Part No: 12048344

| | |
|---|---|
| Description: | TPA |
| Color: | Blue |
| Material: | PA66 HS IM |

### D. Part No: 12048345

| | |
|---|---|
| Description: | TPA |
| Color: | Blue |
| Material: | PA66 HS IM |

### E. Part No: 12047900

| | |
|---|---|
| Description: | TPA |
| Color: | Blue |
| Material: | PA66 HS IM |

### F. Part No: 12047901

| | |
|---|---|
| Description: | TPA |
| Color: | Blue |
| Material: | PA66 HS IM |

### G. Part No: 12191050

| | |
|---|---|
| Description: | Connector Assembly 40M |
| Size: | 32.6L x 24.4H x 92.0W |
| Color: | Gray |
| Material: | PBT 30% GF |

### H. Part No: 12077899

| | |
|---|---|
| Description: | CPA |
| Number Req: | 2 |
| Color: | Orange |
| Material: | PP IM |

**NOTE:** Specifications in this catalog are for general reference only and are subject to change without notice. To verify product information, please contact a Delphi representative.

# 100 Header

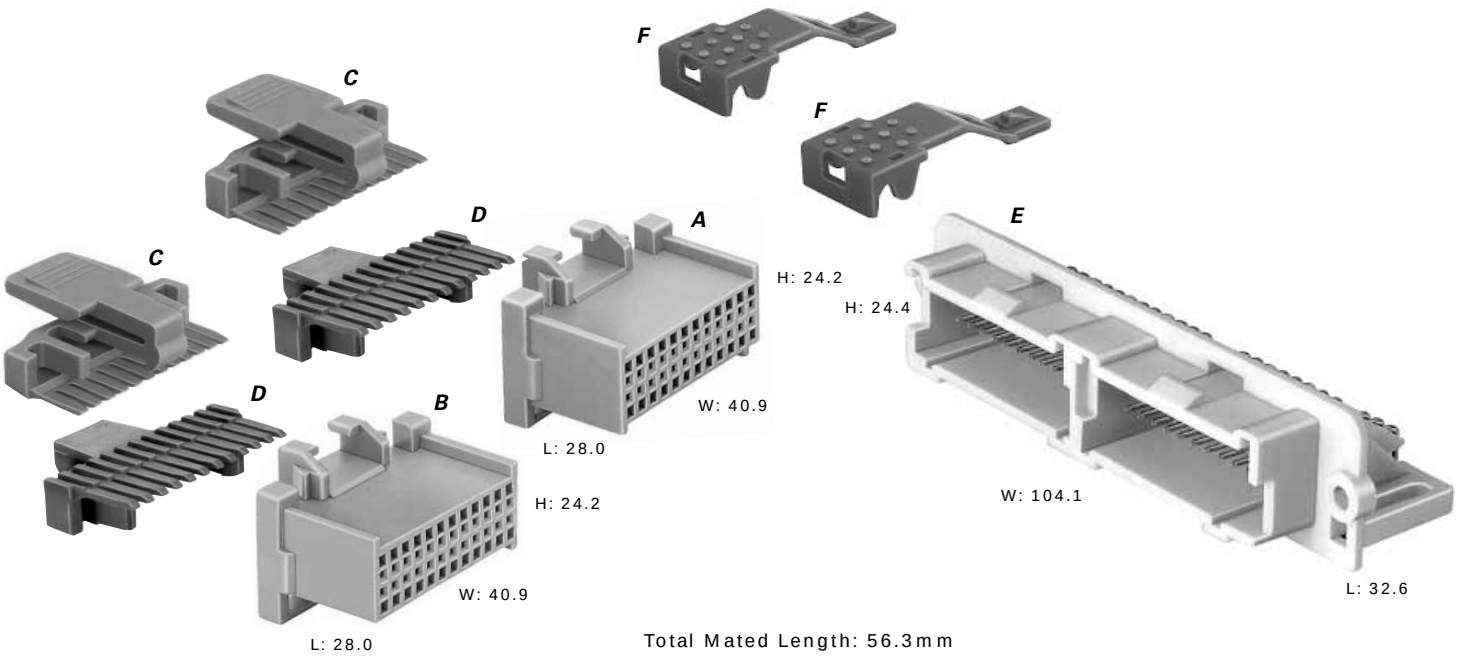


Total Mated Length: 56.3mm

### A. Part No: 12110244†

| | |
|---|---|
| Description: | Connector 24F |
| Size: | 28.0L x 24.2H x 40.9W |
| Color: | Pink |
| Material: | PBT 30% GF |
| Terminals: | See Page 3.8 |

### B. Part No: 12110206†

| | |
|---|---|
| Description: | Connector 24F |
| Size: | 28.0L x 24.2H x 40.9W |
| Color: | Lt. Blue |
| Material: | PBT 30% GF |
| Terminals: | See Page 3.8 |

### C. Part No: 12047900

| | |
|---|---|
| Description: | TPA |
| Number Req: | 2 |
| Color: | Blue |
| Material: | PA66 HS IM |

### D. Part No: 12047901

| | |
|---|---|
| Description: | TPA |
| Number Req: | 2 |
| Color: | Blue |
| Material: | PA66 HS IM |

† For harness assemblies, use either latching TPA 12047900 or low profile TPA 12065209.

### E. Part No: 12191140

| | |
|---|---|
| Description: | Connector Assembly 48M |
| Size: | 32.6L x 24.4H x 104.1W |
| Color: | Natural |
| Material: | PBT 30% GF |

### F. Part No: 12077899

| | |
|---|---|
| Description: | CPA |
| Number Req: | 2 |
| Color: | Orange |
| Material: | PP IM |

**NOTE:** Specifications in this catalog are for general reference only and are subject to change without notice. To verify product information, please contact a Delphi representative.

# 100 Header

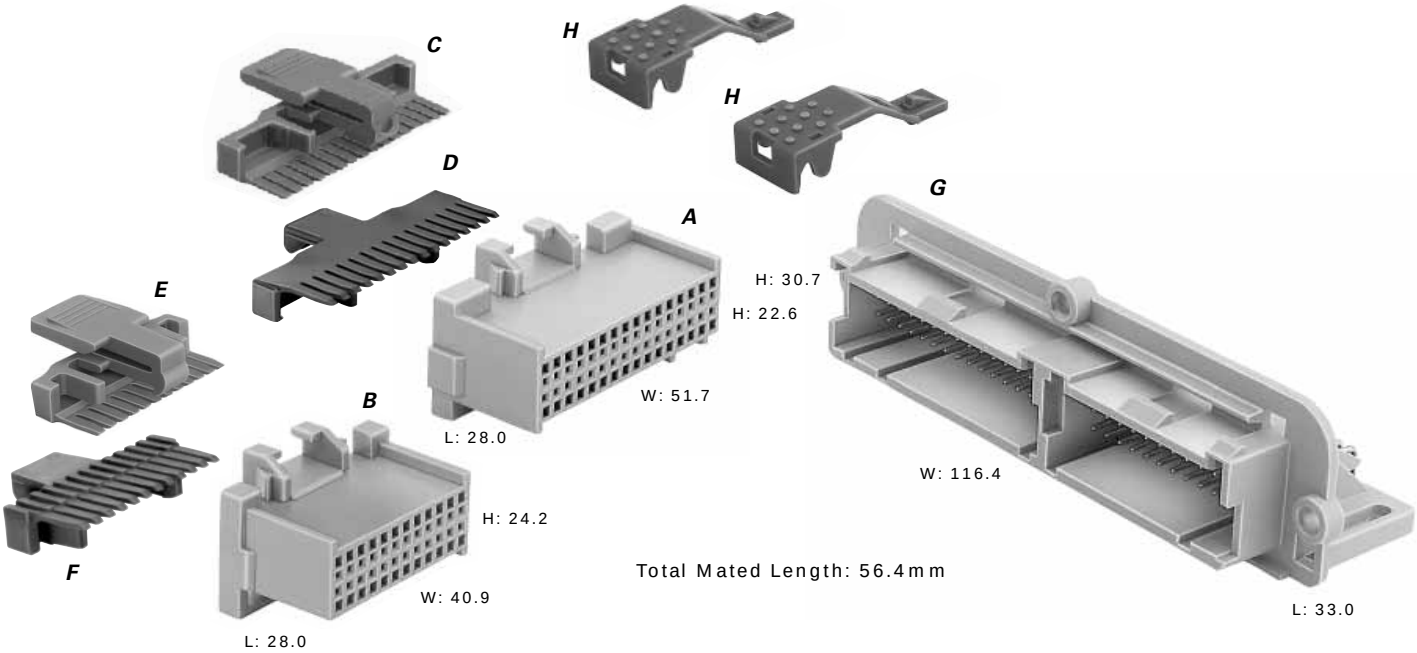


**A. Part No: 12110207* (Lt. Blue)**
**12110245*† (Pink)**
**12160779* (Brown)**

| | |
|---|---|
| Description: | Connector 32F |
| Size: | 28.0L x 22.6H x 51.7W |
| Material: | PBT 30% GF |
| Terminals: | See Page 3.8 |

*Different indexing feature.

**B. Part No: 12110206* (Lt. Blue)**
**12110244* (Pink)**
**12160778* (Brown)**

| | |
|---|---|
| Description: | Connector 24F |
| Size: | 28.0L x 24.2H x 40.9W |
| Material: | PBT 30% GF |
| Terminals: | See Page 3.8 |

*Different indexing feature.

**C. Part No: 12045889**

| | |
|---|---|
| Description: | TPA |
| Color: | Blue |
| Material: | PA66 HS IM |

**D. Part No: 12045890**

| | |
|---|---|
| Description: | TPA |
| Color: | Md. Gray |
| Material: | PA66 HS IM |

† For harness assemblies, use either latching TPA 12045889 or low profile TPA 12065208.

**E. Part No: 12047900**

| | |
|---|---|
| Description: | TPA |
| Color: | Blue |
| Material: | PA66 HS IM |

**F. Part No: 12047901**

| | |
|---|---|
| Description: | TPA |
| Color: | Blue |
| Material: | PA66 HS IM |

**G. Part No: 12110209* (Lt. Blue)**
**12110241* (Pink)**
**12160777* (Brown)**

| | |
|---|---|
| Description: | Connector Assembly 56M |
| Size: | 33.0L x 30.7H x 116.4W |
| Material: | PBT 30% GF |

*Different indexing feature.

**H. Part No: 12077899**

| | |
|---|---|
| Description: | CPA |
| Number Req: | 2 |
| Color: | Orange |
| Material: | PP IM |

**NOTE:** Specifications in this catalog are for general reference only and are subject to change without notice. To verify product information, please contact a Delphi representative.

# 100 Header

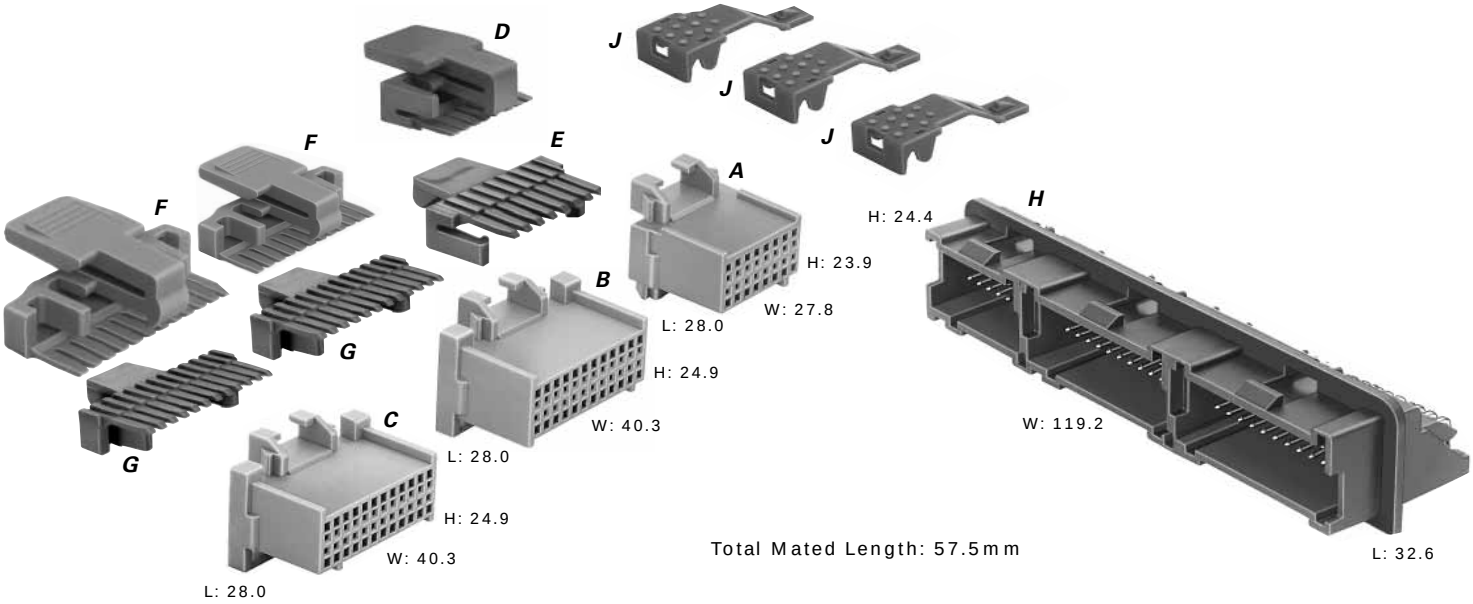


**A. Part No: 12084945* (Gray)**
**12191375* (Purple)**

| | |
|---|---|
| Description: | Connector 16F |
| Size: | 28.0L x 23.9H x 27.8W |
| Material: | PBT 30% GF |
| Terminals: | See Page 3.8 |

*Different indexing feature.

**B. Part No: 12110088* (Gray)**
**12110206* (Lt. Blue)**

| | |
|---|---|
| Description: | Connector 24F |
| Size: | 28.0L x 24.9H x 40.3W |
| Material: | PBT 30% GF |
| Terminals: | See Page 3.8 |

*Different indexing feature.

**C. Part No: 12110244* (Pink)**
**12160778* (Brown)**

| | |
|---|---|
| Description: | Connector 24F |
| Size: | 28.0L x 24.9H x 40.3W |
| Material: | PBT 30% GF |
| Terminals: | See Page 3.8 |

*Different indexing feature.

**D. Part No: 12048344**

| | |
|---|---|
| Description: | TPA |
| Color: | Blue |
| Material: | PA66 HS IM |

**E. Part No: 12048345**

| | |
|---|---|
| Description: | TPA |
| Color: | Blue |
| Material: | PA66 HS IM |

**F. Part No: 12047900**

| | |
|---|---|
| Description: | TPA |
| Number Req: | 2 |
| Color: | Blue |
| Material: | PA66 HS IM |

**G. Part No: 12047901**

| | |
|---|---|
| Description: | TPA |
| Number Req: | 2 |
| Color: | Blue |
| Material: | PA66 HS IM |

**H. Part No: 12160861* (Black)**
**12191293* (Dk. Blue)**

| | |
|---|---|
| Description: | Connector Assembly 64M |
| Size: | 32.6L x 24.4H x 119.2W |
| Material: | PBT 30% GF |

*Different indexing feature.

**J. Part No: 12077899**

| | |
|---|---|
| Description: | CPA |
| Number Req: | 3 |
| Color: | Orange |
| Material: | PP IM |

**NOTE:** Specifications in this catalog are for general reference only and are subject to change without notice. To verify product information, please contact a Delphi representative.

# 100 Mixed

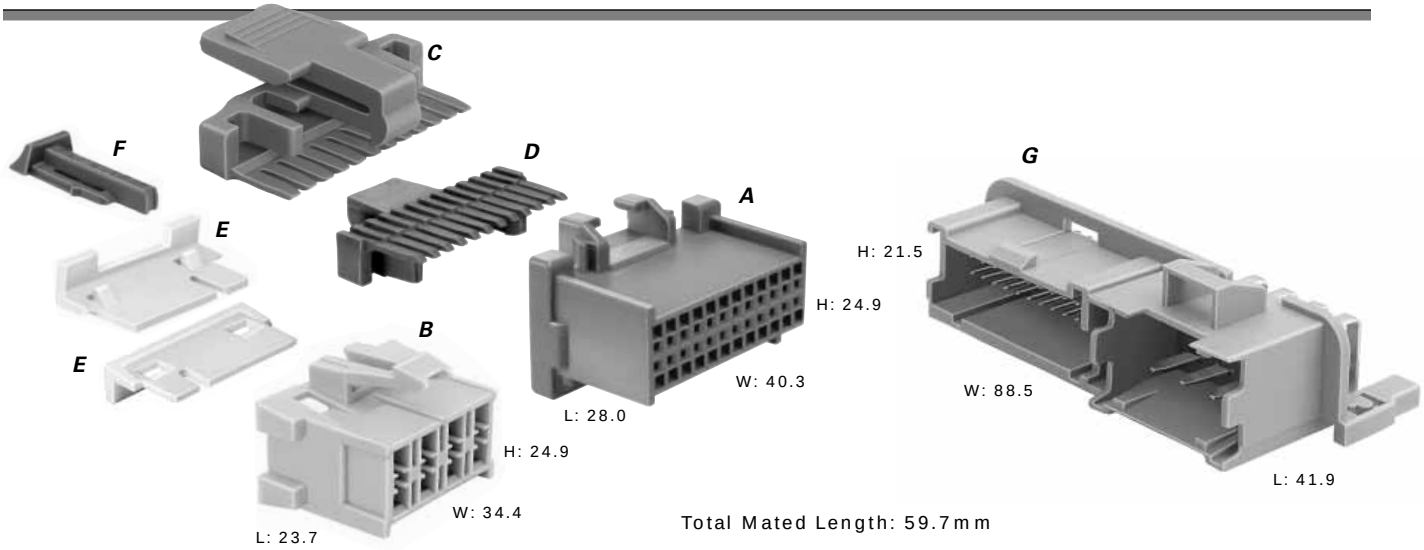


**A. Part No: 12110088* (Gray)**
**12110206* (Lt. Blue)**
**12110244* (Pink)**

| | |
|---|---|
| Description: | Connector 24F |
| Size: | 28.0L x 24.9H x 40.3W |
| Material: | PBT 30% GF |
| Terminals: | See Page 3.8 |

*Different indexing feature.

**B. Part No: 12110626†**

| | |
|---|---|
| Description: | Connector 8F |
| Size: | 23.7L x 24.9H x 34.4W |
| Color: | Lt. Gray |
| Material: | PA66 HS IM |
| Terminals: | See Page 2.104, 280 Metri-Pack Tangless |

**C. Part No: 12047900**

| | |
|---|---|
| Description: | TPA |
| Color: | Blue |
| Material: | PA66 HS IM |

**D. Part No: 12047901**

| | |
|---|---|
| Description: | TPA |
| Color: | Blue |
| Material: | PA66 HS IM |

**E. Part No: 15324332**

| | |
|---|---|
| Description: | TPA |
| Number Req: | 2 |
| Color: | Natural |
| Material: | PA66 HS IM |

**F. Part No: 12052834**

| | |
|---|---|
| Description: | CPA |
| Color: | Green |
| Material: | PP IM |

† Use p/n 15357040 to mate to audio amplifiers.

**G. Part No: 15357042* (Gray)**
**15357044* (Lt. Blue)**
**15357046* (Pink)**

| | |
|---|---|
| Description: | Connector Assembly 32M |
| Size: | 41.9L x 21.5H x 88.5W |
| Material: | PBT 30% GF |

*Different indexing feature.

**NOTE:** Specifications in this catalog are for general reference only and are subject to change without notice. To verify product information, please contact a Delphi representative.

# 100W Header

## Cross Sectional View

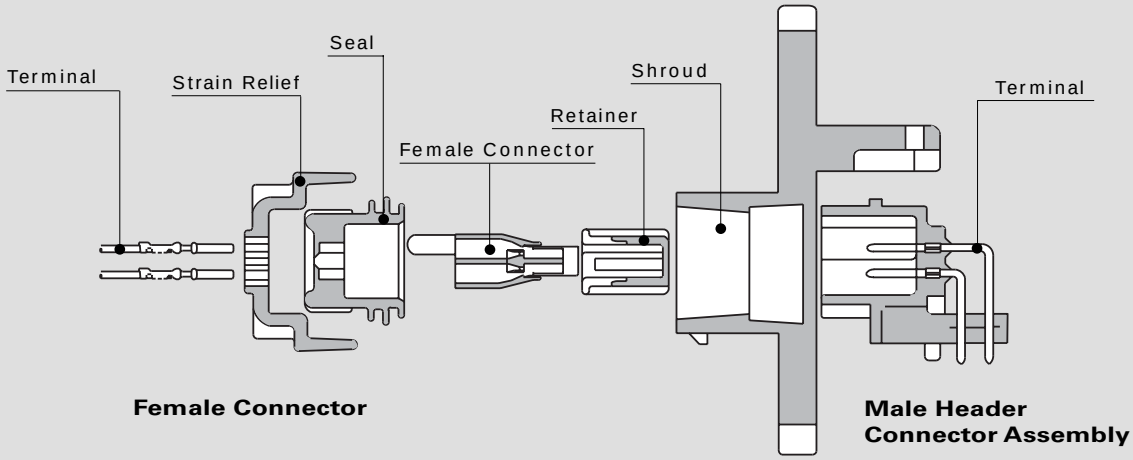


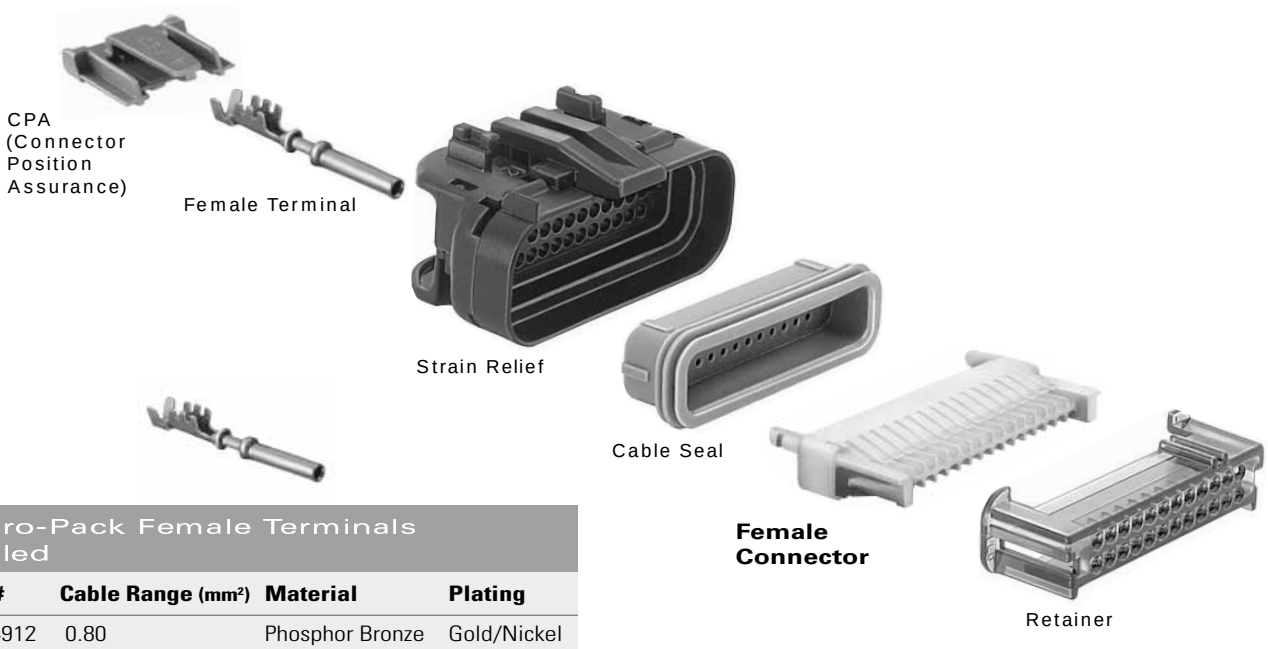


### Micro-Pack Female Terminals Sealed

| Part # | Cable Range (mm²) | Material | Plating |
|---|---|---|---|
| 12084912 | 0.80 | Phosphor Bronze | Gold/Nickel |
| 12084913 | 0.50-0.35 | Phosphor Bronze | Gold/Nickel |

### Micro-Pack Female Connectors Sealed

| # Cavities | Connector | Color | Material | TPA | Retainer** | Seal | Strain Relief |
|---|---|---|---|---|---|---|---|
| 24 | 12129225 | Natural | PBT | – | 12129183 | 12110403* | 12110155 |
| 32 | 12129025 | Natural | PBT | – | 12129023 | 12129026* | 12129030 |
| 36 | 12110487 | Black | PBT | – | 12110488 | 12110489* | 12110490 |

* Validated for 0.80-0.50 cable.
** Retainers provide terminal position assurance.

**NOTE:** Specifications in this catalog are for general reference only and are subject to change without notice. To verify product information, please contact a Delphi representative.

# 100W Header

## Sealed System Application Information

CABLE RANGE (mm²): ..... 0.35-0.8

CURRENT RANGE (AMPS): ..... 0-7.5

TEMP RANGE °C: ..... -40 to 125

RESISTANCE: ..... <10mΩ@20mV

VOLTAGE DROP: ... <10.0mV/amp

CENTERLINE SPACING (mm): ..... 3.5

TERMINAL DIAMETER (mm): ..... 1.0

### Micro-Pack 100W Terminals – Gold Plated

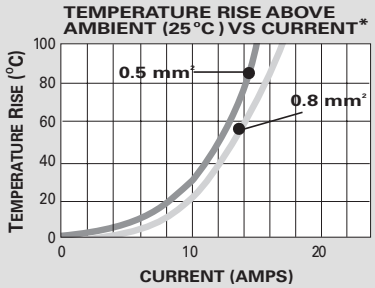


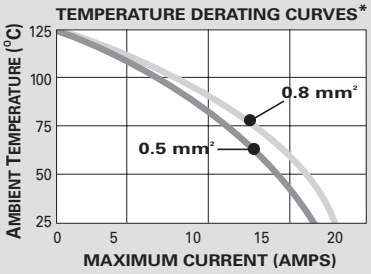


*The test data are based on single circuits in free space and were generated using a "Lumped Resistance" model. This model does not account for all of the variables that would be present in an actual application. For actual product performance, contact your regional support representative.

**Male Header Connector Assembly**

| Micro-Pack Male Header Connector Assemblies Sealed | | | |
|---|---|---|---|
| **# Cavities** | **Connector** | **Color** | **Material** |
| 24 | 12092320 | Black | PBT 30% GF |
| 32 | 12129008 | Blue | PBT 30% GF |
| 36 | 12110485 | Black | PBT 30% GF |

Terminals included in connector assembly.

**SECTION NOTES:**

- Sealing shroud and locking feature for connector assembly must be designed into mating device housing.

**NOTE:** Specifications in this catalog are for general reference only and are subject to change without notice. To verify product information, please contact a Delphi representative.

# 100W Header

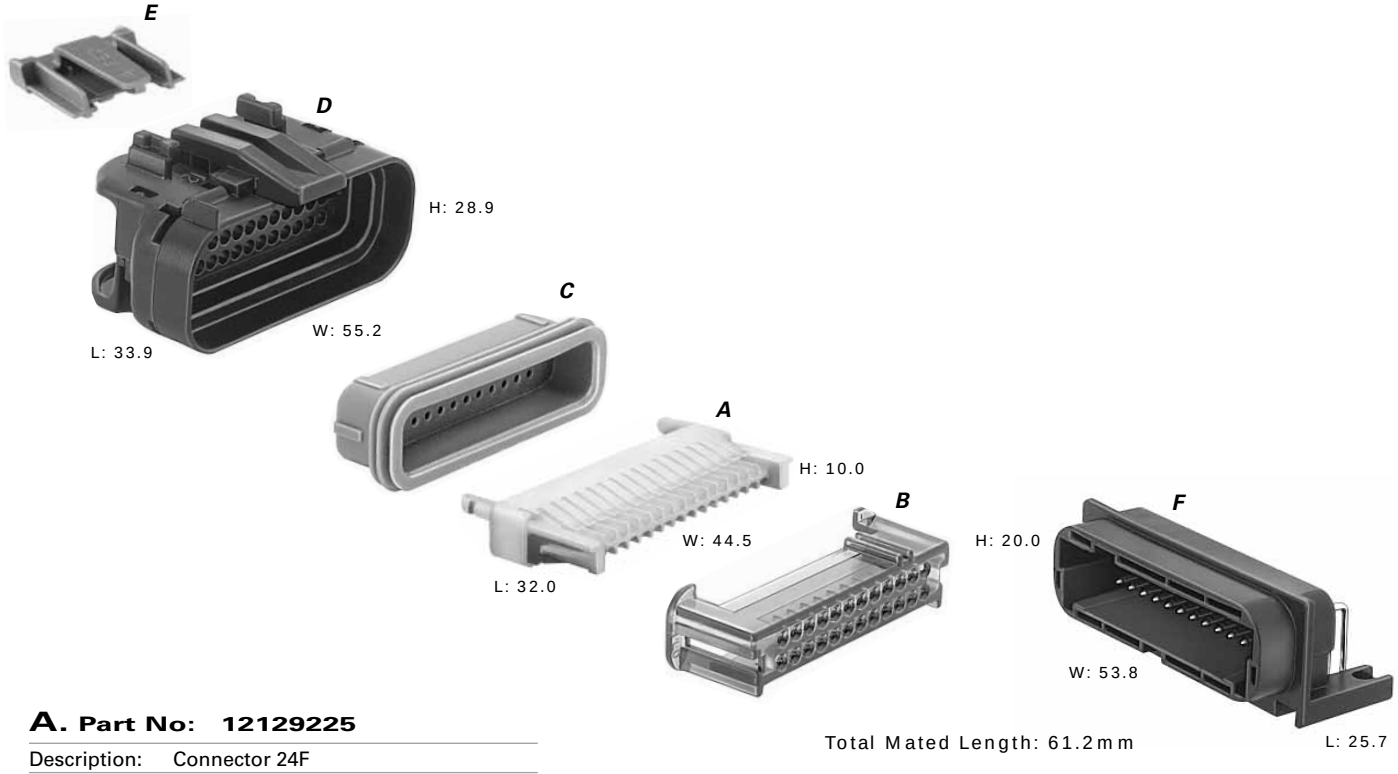


### A. Part No: 12129225

| | |
|---|---|
| Description: | Connector 24F |
| Size: | 32.0L x 10.0H x 44.5 |
| Color: | Natural |
| Material: | PBT |
| Terminals: | See Page 3.24 |

### B. Part No: 12129183

| | |
|---|---|
| Description: | Retainer 24F |
| Color: | Black |
| Material: | PC |

### C. Part No: 12110403

| | |
|---|---|
| Description: | Seal 24F |
| Color: | Green |
| Material: | Silicone |

### D. Part No: 12110155 (Right Wire Dress)

| | |
|---|---|
| Description: | Strain Relief 24F |
| Color: | Gray |
| Size: | 33.9L x 28.9H x 55.2W |
| Material: | TEEE |

### E. Part No: 12110299

| | |
|---|---|
| Description: | CPA |
| Color: | Red |
| Material: | PBT |

### F. Part No: 12092320

| | |
|---|---|
| Description: | Connector Assembly 24M |
| Size: | 25.7L x 20.0H x 53.8W |
| Color: | Black |
| Material: | PBT 30% GF |

**NOTE:** Specifications in this catalog are for general reference only and are subject to change without notice. To verify product information, please contact a Delphi representative.

# 100W Header

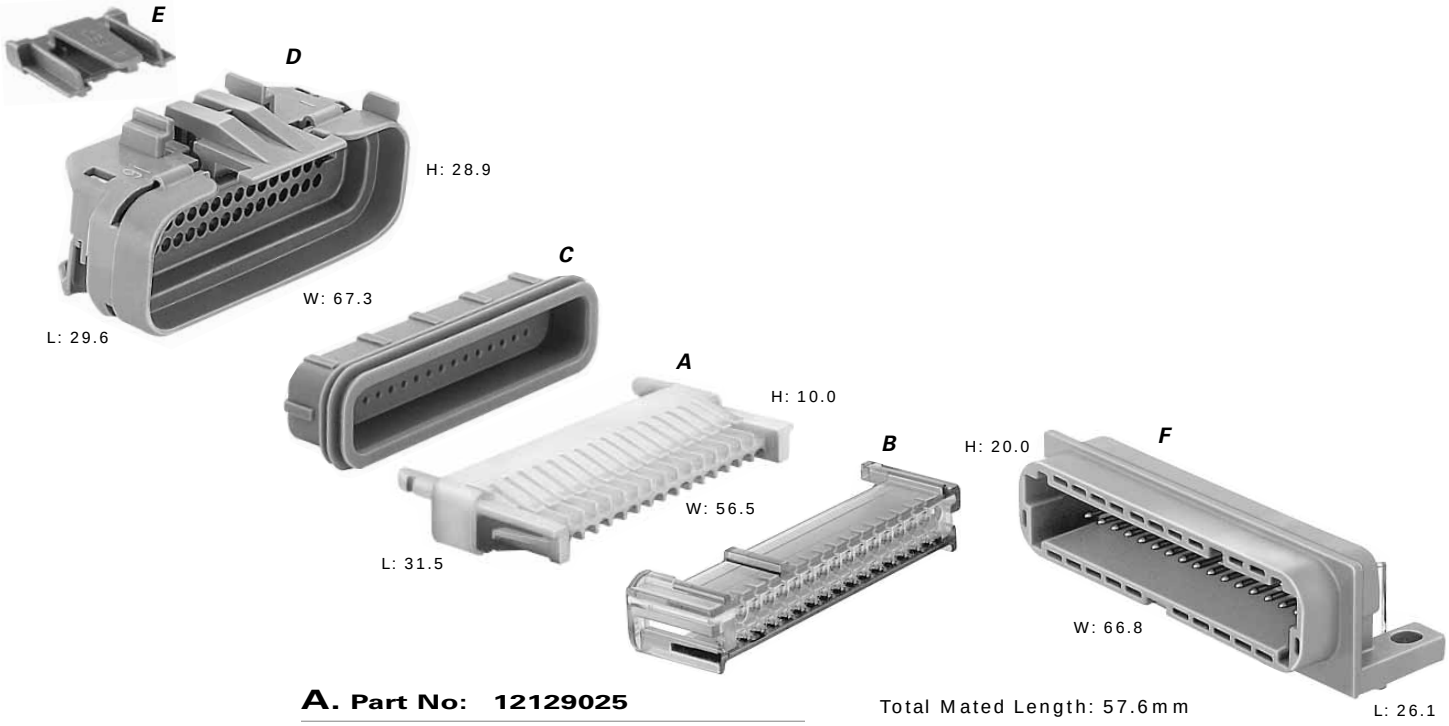


Total Mated Length: 57.6mm

**A. Part No: 12129025**

| | |
|---|---|
| Description: | Connector 32F |
| Size: | 31.5L x 10.0H x 56.5W |
| Color: | Natural |
| Material: | PBT |
| Terminals: | See Page 3.24 |

**B. Part No: 12129023* (Md. Blue)**
**12129021* (Black)**
**12129022* (Clear)**

| | |
|---|---|
| Description: | Retainer 32F |
| Material: | PC |

*Different indexing feature.

**C. Part No: 12129026**

| | |
|---|---|
| Description: | Seal 32F |
| Color: | Green |
| Material: | Silicone |

**D. Part No: 12129030**
**(Right Wire Dress)**

| | |
|---|---|
| Description: | Strain Relief 32F |
| Size: | 29.6L x 28.9H x 67.3W |
| Color: | Gray |
| Material: | TEEE |

**E. Part No: 12110299**

| | |
|---|---|
| Description: | CPA |
| Color: | Red |
| Material: | PBT |

**F. Part No: 12129008* (Blue)**
**12186041* (Black)**
**12186043* (Gray)**

| | |
|---|---|
| Description: | Connector Assembly 32M |
| Size: | 26.1L x 20.0H x 66.8W |
| Material: | PBT 30% GF |

*Different indexing feature.

**NOTE:** Specifications in this catalog are for general reference only and are subject to change without notice. To verify product information, please contact a Delphi representative.

# 100W Header

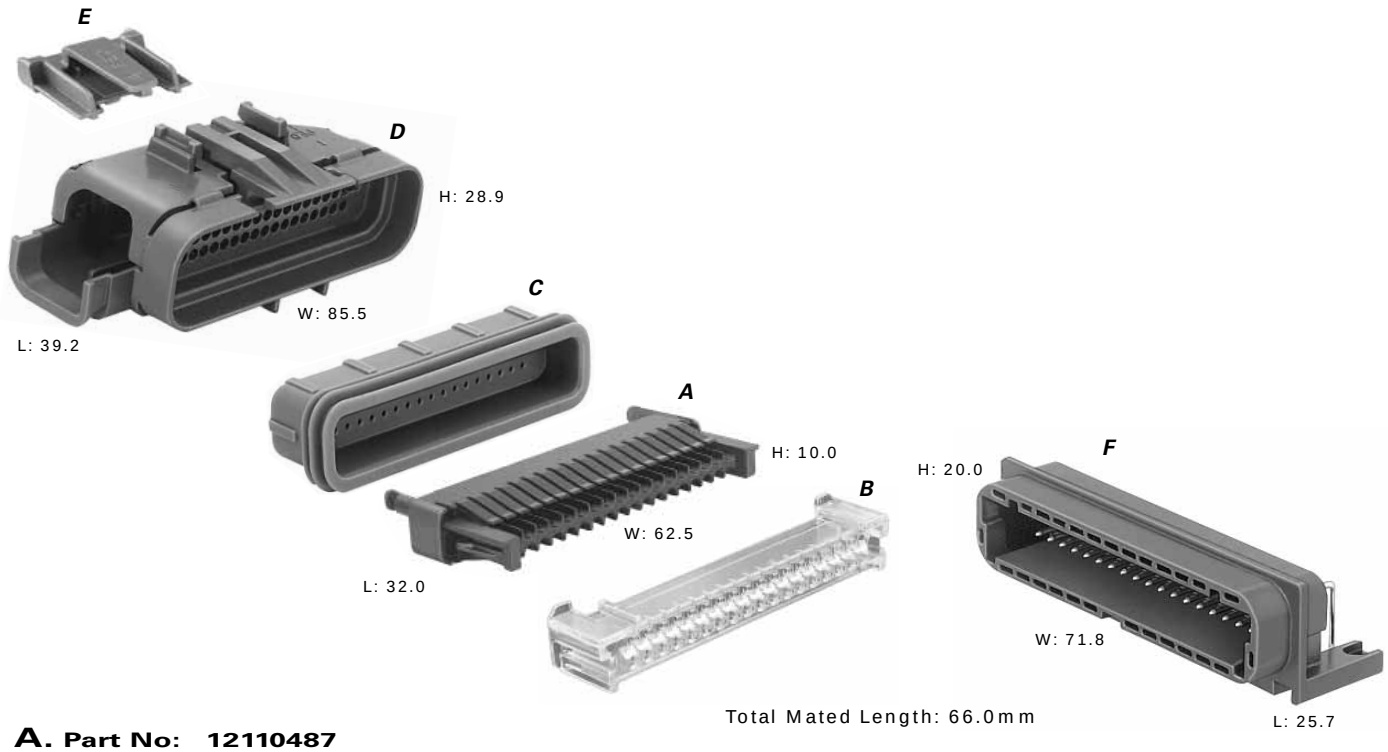


### A. Part No: 12110487

| | |
|---|---|
| Description: | Connector 36F |
| Size: | 32.0L x 10.0H x 62.5W |
| Color: | Black |
| Material: | PBT |
| Terminals: | See Page 3.24 |

### B. Part No: 12110488

| | |
|---|---|
| Description: | Retainer 36F |
| Color: | Clear |
| Material: | PC |

### C. Part No: 12110489

| | |
|---|---|
| Description: | Seal 36F |
| Color: | Green |
| Material: | Silicone |

### D. Part No: 12110490 (Right Wire Dress)

| | |
|---|---|
| Description: | Strain Relief 36F |
| Size: | 39.2L x 28.9H x 85.5W |
| Color: | Gray |
| Material: | TEEE |

### E. Part No: 12110299

| | |
|---|---|
| Description: | CPA |
| Color: | Red |
| Material: | PBT |

### F. Part No: 12110485

| | |
|---|---|
| Description: | Connector Assembly 36M |
| Size: | 25.7L x 20.0H x 71.8W |
| Color: | Black |
| Material: | PBT 30% GF |

**NOTE:** Specifications in this catalog are for general reference only and are subject to change without notice. To verify product information, please contact a Delphi representative.

# Unsealed Header Connectors & Mating Components

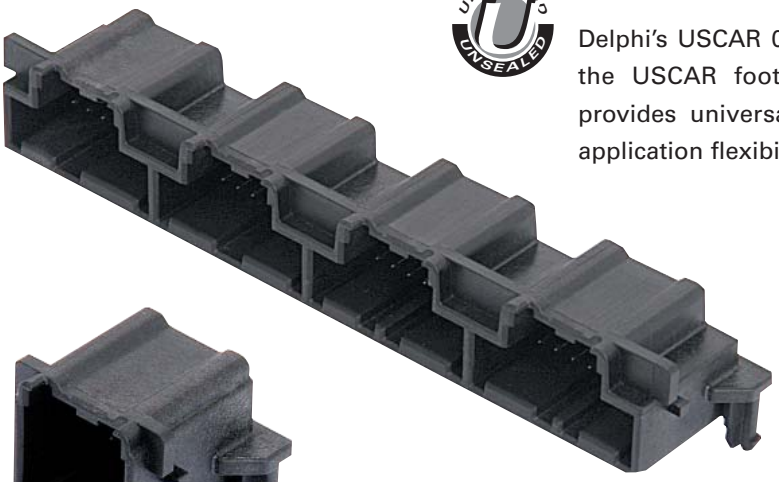

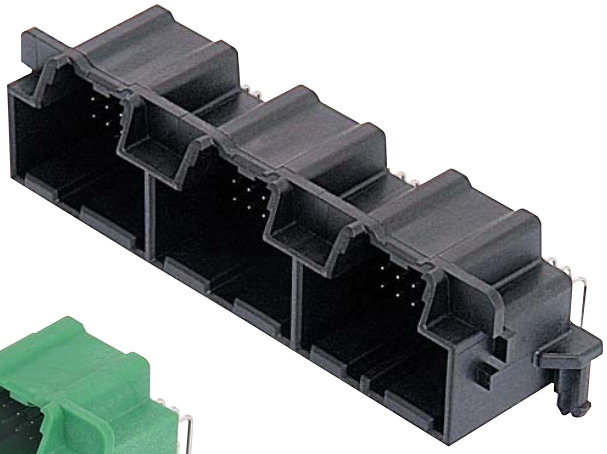

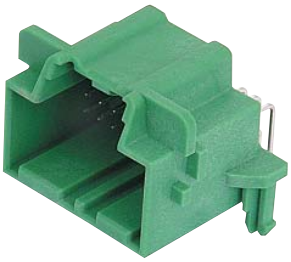

## Performance Advantages

Delphi's USCAR 064 series header connectors satisfy the USCAR footprints for mating interfaces. This provides universal use, easy integration and broad application flexibility.

## Meeting USCAR Standards

Delphi's standard 064 series unsealed header connectors are USCAR* compliant. These products:

- meet USCAR design guidelines (per SAE/USCAR-12 Revision 2, Dec. 2001)
- meet published USCAR interface footprints
- are validated to USCAR specifications (per SAE/USCAR-2 Revision 3, April 2001)

Two header types are available. They include:

- Standard one-row headers
- Standard two-row headers

Both header types are available in either right angle or straight pin versions.

## Mating Connectors

Delphi also offers a complete line of 064 series female mating connectors in USCAR indexes A to F.

*USCAR is the United States Council for Automotive Research.

# Introduction

## Benefits/Features:

- USCAR compliant
- Intermateability
- Interchangeability
- Industry standard design and specifications
- Provides broad application flexibility
- Hand-mateable connections (75N maximum engage force)
- Provides ergonomic assembly and efficient installation
- Standard tin-plated interfaces are cost-effective
- Optional gold-plated interfaces enhance reliability for specific applications
- Secondary terminal lock for enhanced robustness
- Connector position assist (CPA) for superior connection reliability
- Color coding by index options for improved assembly

## Tooling

Delphi's 064 series header connectors and components are validated to USCAR specifications (per SAE/USCAR-2 Revision 3, April 2001). All components in this catalog can be supplied from low volume tooling, many of which are available from high volume production tooling as well. PPAP certification can be supplied for low volume production intent tooling if requested.

## Typical Applications

Delphi's 064 series header products can be used in the automotive and transportation markets. They are suitable for device, in-line and board-to-wire applications in the following:

- Satellite radios
- Infotainment devices
- Automotive body modules and systems
- HVAC systems

In addition to the markets described, 064 series connectors may apply to other application categories, many of which are listed on the overview chart on page 4.3. Delphi can also provide custom designs based on customer requirements.

## 064 Series Overview

**Characteristics, Benefits/ Features and Applications** . . . . . 4.2

**Applications Overview** . . . . . 4.3

**Specifications** . . . . . 4.4

**064 Series Unsealed Header Connectors**

- **One-Row**
  - **Single Modules: 4, 5, 6, 7, 8, 12-way** . . . . 4.8
  - **Combination Modules: 16, 24, 32-way** . . 4.18
- **Two-Row**
  - **Single Modules: 8, 10, 12, 16-way** . . . . . 4.24
  - **Combination Modules: 16, 24, 32, 40, 42, 44, 48, 64-way** . . . . . 4.32

**Mixed Series Unsealed Header Connectors**

- **Two-Row**
  - **Combination Modules:**
    - **Amplifier Header 40-way** . . . . . 4.48
    - **Radio Header 30 & 46-way** . . . . . 4.49

**Mating Components (Unsealed Female Connectors)**

- **MicroHVT**
  - **One-Row: 4, 5, 6, 7, 8-way** . . . . . 4.50
  - **Two-Row: 8, 10, 12, 16-way** . . . . . 4.55
  - **Terminals** . . . . . 4.59
- **Micro64**
  - **Two-Row: 8, 10, 16-way** . . . . . 4.60
  - **Terminals** . . . . . 4.63

# Typical Applications Overview

| | 064 Headers | Micro64 | MicroHVT |
|---|---|---|---|
| Products | | | |
| Typical Applications | ■ Sirius Satellite Radios*<br>■ XM Satellite Radios**<br>■ Infotainment devices, including DVDs<br>■ Door panels<br>■ HVAC systems<br>■ Seat controls<br>■ Window switches | ■ Automotive and commercial vehicles<br>■ Engine management systems<br>■ Powertrain control systems<br>■ ABS braking systems<br>■ Airbag systems | ■ Automotive electronics<br>■ Telematics<br>■ Entertainment systems<br>■ Video<br>■ Audio, radio, amplifiers<br>■ Displays, instrument panels<br>■ Navigation systems<br>■ Rear camera systems<br>■ Sensors<br>■ Switches |
| | | 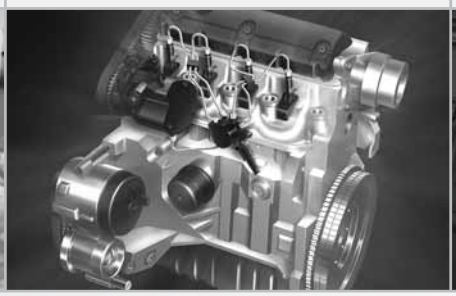 | |

*The products and applications within this brochure are presented as a reference guide only. Other Delphi Connection Systems' products may also apply to the application categories presented above. In addition, these and other Delphi products may be available for similar application categories not represented in this brochure.*

*For additional product information and application support, please contact your local Delphi Connection Systems' sales representative or contact us directly at [1] **248.813.2334**, or visit our website at **http://connectors.delphi.com**.*

** © Sirius Satellite Radio Inc. "Sirius" and related marks are trademarks of Sirius Satellite Radio Inc.*

*** XM Satellite Radio Inc. is a wholly owned subsidiary of XM Satellite Radio Holdings Inc.*

# 064 Series Unsealed Specifications

## MicroHVT & Micro64 Mating Terminals

| Female Terminal Application Guidelines | MicroHVT | Micro64 |
|---|---|---|
| Typical Cable Applications | 0.35 mm² - 0.50 mm² TWP (SAE J-1128)<br>0.75 mm² FLRY-A (DIN 72551)<br>0.80 mm² TXL Reduced Wall (SAE J-1128) | 0.35 mm² - 0.50 mm² TWP (SAE J-1128)<br>0.75 mm² FLRY-A (DIN 72551)<br>0.80 mm² TXL Reduced Wall (SAE J-1128) |
| Current Range | 0 - 7 amps | 0 - 5 amps |
| Temperature Range | -40°C to +85°C | -40°C to +85°C |
| Resistance | <20 mΩ @ 20 mV | <20 mΩ @ 20 mV |
| Voltage Drop | <20 mV/amp | <20 mV/amp |
| Centerline Spacing | 2.54 mm (terminal-to-terminal and row-to-row) | 2.54 mm (terminal-to-terminal and row-to-row) |
| Header Pin | 0.64 mm square, tin-plated | 0.64 mm square, tin-plated |

## Temperature Rise/Derating Curves

### MicroHVT

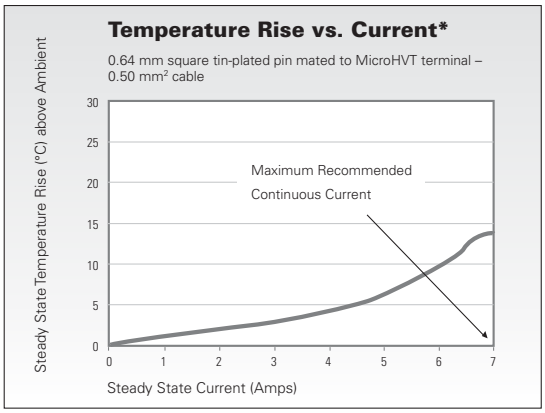


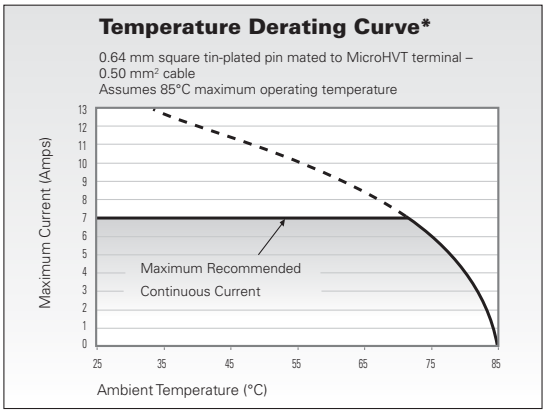


### Micro64

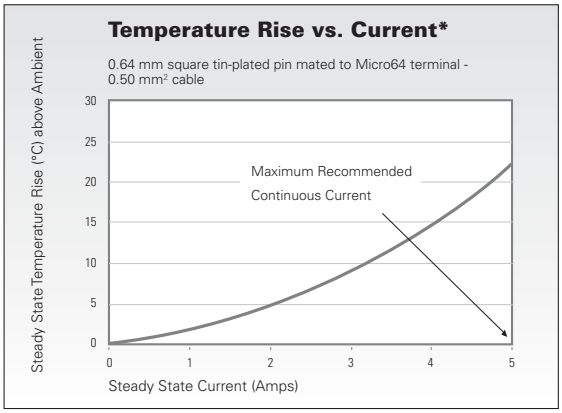


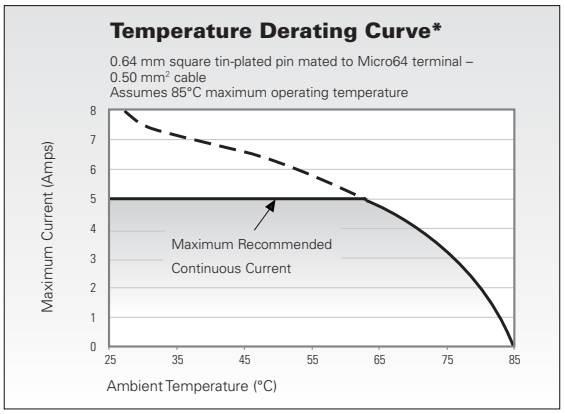


** Data based on laboratory testing of a single circuit in free air. The lab test does not account for all of the variables that would be present in an actual application.*

# USCAR Footprints

## One-Row

Shown: 064-U-008-1-A02

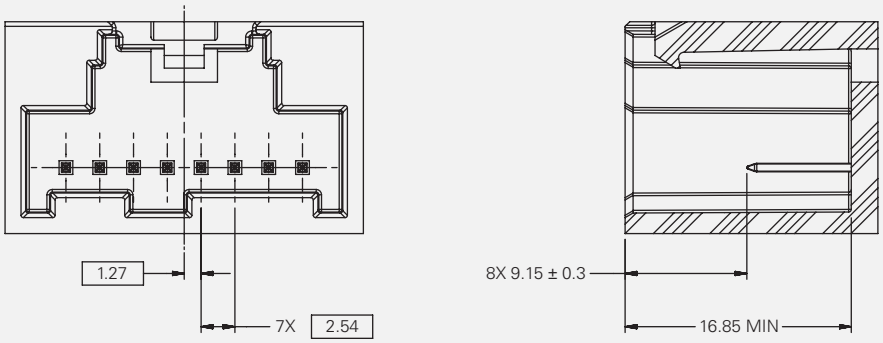


## Two-Row

Shown: 064-U-016-2-A02

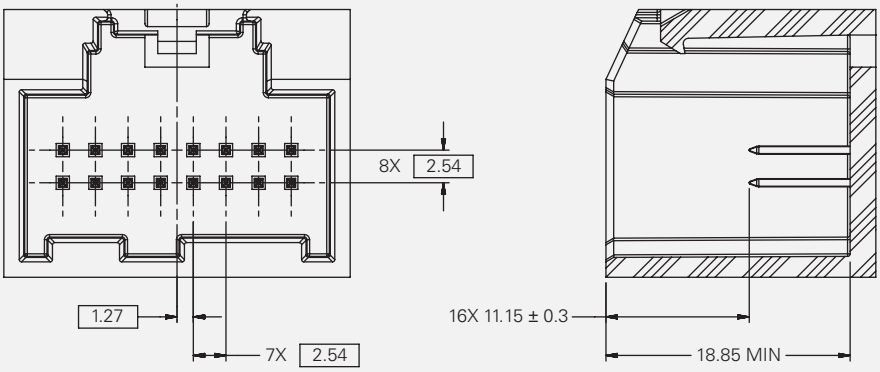


## 0.64 mm Square Pins

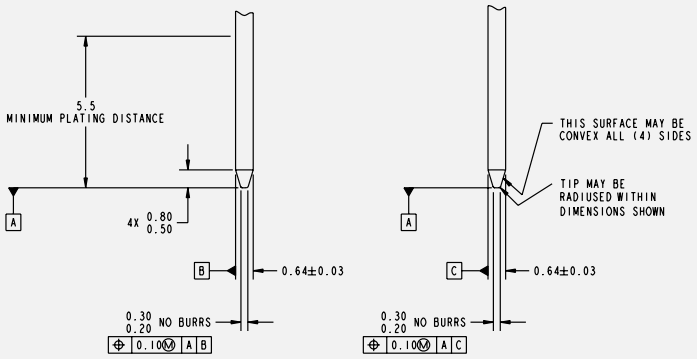


*All dimensions shown in millimeters.*

For complete footprint details, visit the EWCAP section at **www.USCARteams.org**.

For header connector part drawings, contact Delphi Connection Systems or visit **http://connectors.delphi.com**.

**Male Pin Notes:**

- Pin must be symmetrical within tolerance shown.
- All tip or pin edges may be radiused – R 0.08 max.
- No burrs on tip or pin edges.
- All surfaces of pin must be plated.
- All pin dimensions include plating.

*USCAR is the United States Council for Automotive Research.*

*EWCAP is USCAR's Electrical Wiring Component Applications Partnership.*

# USCAR Indexing

## One-Row – Index A

Shown: 064-U-008-1-A02

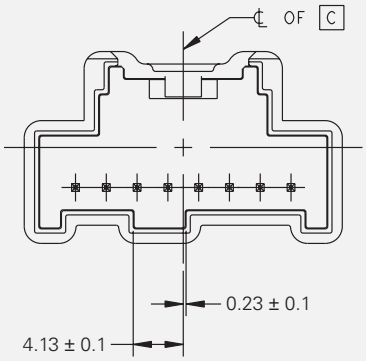


## One-Row – Index B

Shown: 064-U-008-1-B02

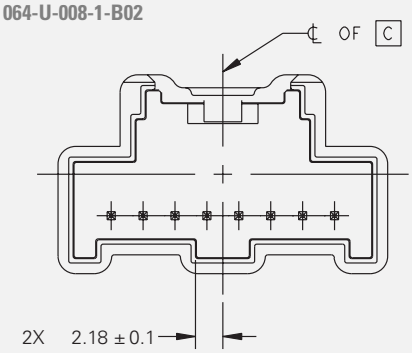


## One-Row – Index C

Shown: 064-U-008-1-C02

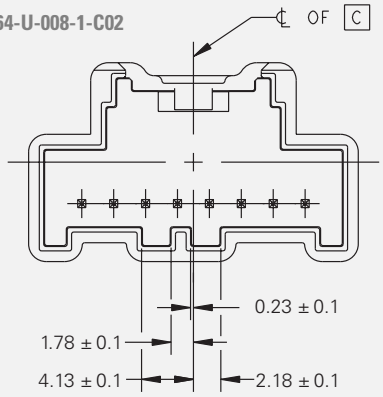


## One-Row – Index D

Shown: 064-U-008-1-D02

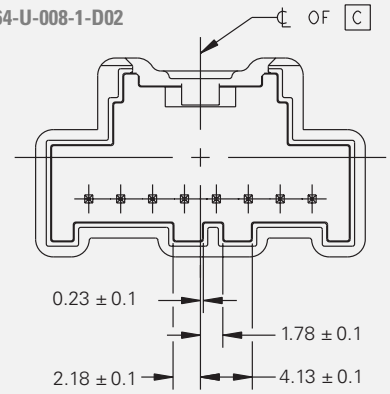


## One-Row – Index E

Shown: 064-U-008-1-E02

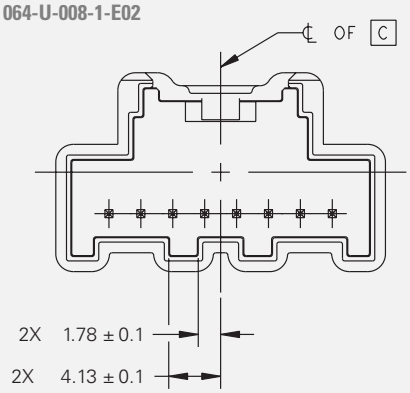


## One-Row – Index F

Shown: 064-U-008-1-F02

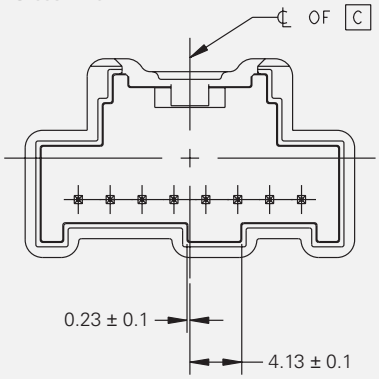


*The six USCAR examples shown above are typical of one-row and two-row indexing configurations. For complete indexing details, please visit www.USCARteams.org.*

# Typical Recommended PCB Layouts

## 1 x 8 - Right Angle

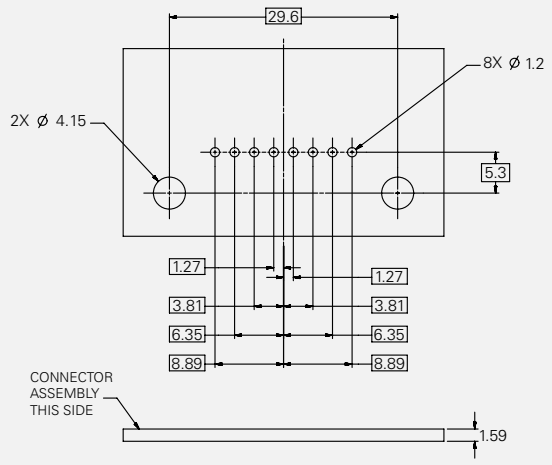


## 2 x 8 - Right Angle

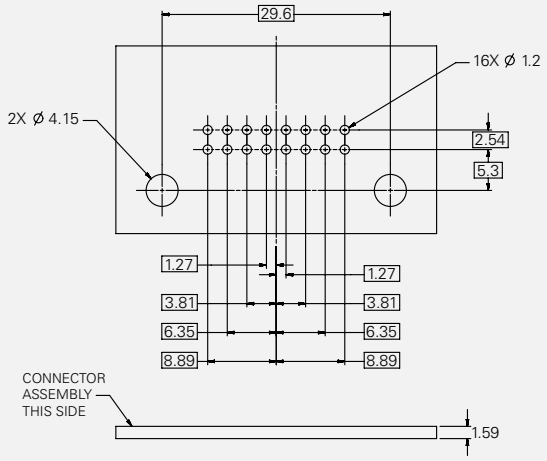


## 1 x 8 - Straight

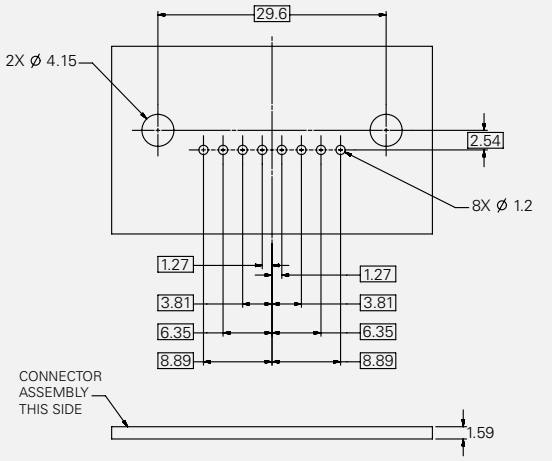


## 2 x 8 - Straight

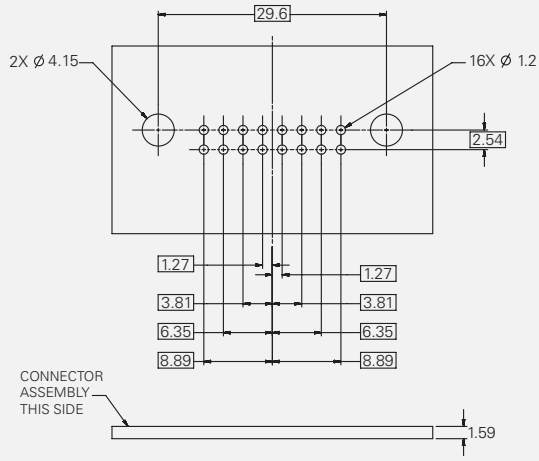


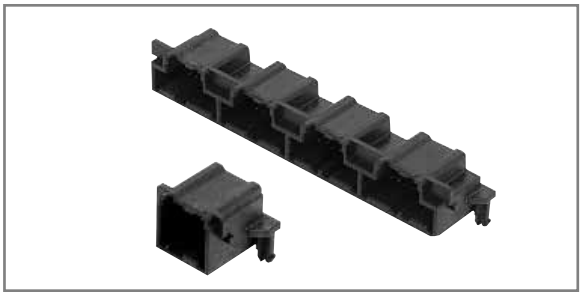

Standard One-Row USCAR Headers

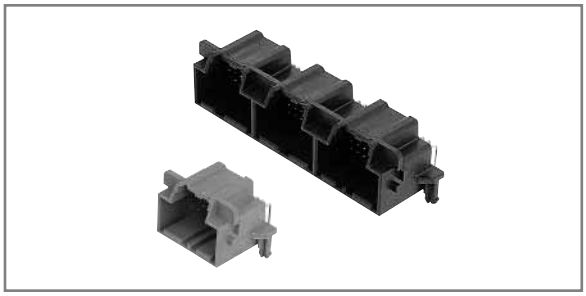

Standard Two-Row USCAR Headers

# 064 Header
# One-Row – Single Module

## 4-way Unsealed - Right Angle

**Shown: Index 4A**

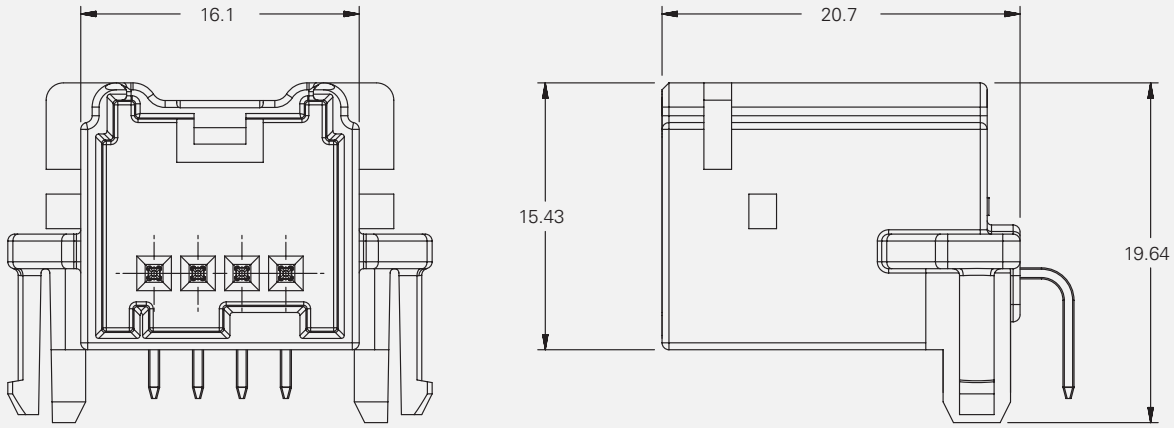

*Dimensions shown in millimeters.*

| Part Number | Material | Color | Index | USCAR Cross-Reference | Mating Connector |
|---|---|---|---|---|---|
| | | | | | MicroHVT |
| 15462854 | PPA GF33 HS | Black | 4A | 064-U-004-1-A02 | 13513469 |
| 15462855 | PPA GF33 HS | Gray | 4B | 064-U-004-1-B02 | PE107546 |
| 15462856 | PPA GF33 HS | Brown | 4C | 064-U-004-1-C02 | PE107547 |
| 15462857 | PPA GF33 HS | Green | 4D | 064-U-004-1-D02 | PE107548 |
| 15462858 | PPA GF33 HS | Dark Blue | 4E | 064-U-004-1-E02 | PE107549 |
| 15462859 | PPA GF33 HS | Natural | 4F | 064-U-004-1-F02 | 13531958 |

*This catalog includes products which are not yet production released.*
*All catalog parts are available from low volume tooling.*
*Many catalog parts are available from high volume production tooling.*
*For parts availability, lead times and additional product information, contact Delphi Connection Systems at 248.813.2334.*

**NOTE:** Specifications in this catalog are for general reference only and are subject to change without notice. To verify product information, please contact a Delphi representative.

# 064 Header
# One-Row – Single Module

## 4-way Unsealed - Straight

**Shown: Index 4A**

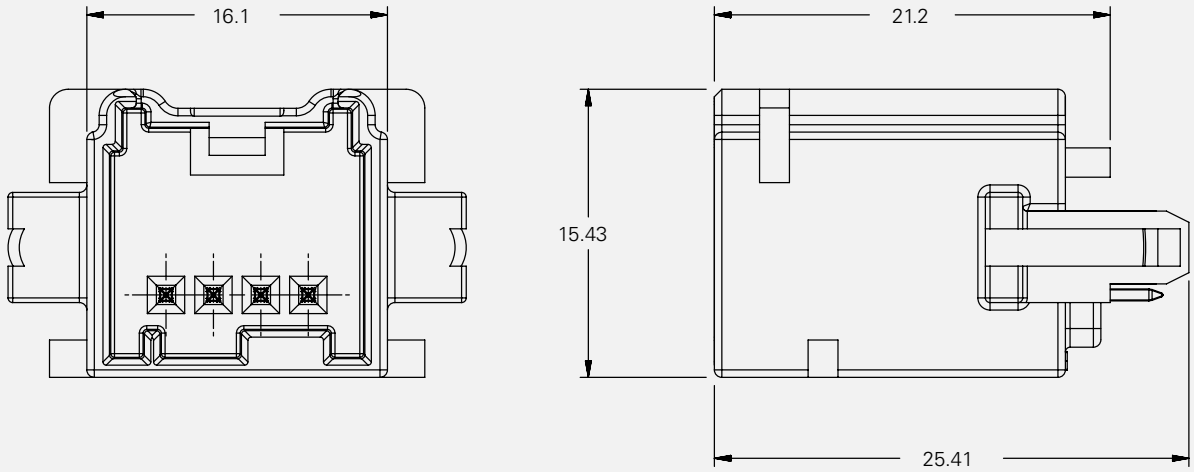


*Dimensions shown in millimeters.*

| Part Number | Material | Color | Index | USCAR Cross-Reference | Mating Connector |
|---|---|---|---|---|---|
| | | | | | MicroHVT |
| 15462823 | PPA GF33 HS | Black | 4A | 064-U-004-1-A02 | 13513469 |
| 15462824 | PPA GF33 HS | Gray | 4B | 064-U-004-1-B02 | PE107546 |
| 15462825 | PPA GF33 HS | Brown | 4C | 064-U-004-1-C02 | PE107547 |
| 15462826 | PPA GF33 HS | Green | 4D | 064-U-004-1-D02 | PE107548 |
| 15462827 | PPA GF33 HS | Dark Blue | 4E | 064-U-004-1-E02 | PE107549 |
| 15462828 | PPA GF33 HS | Natural | 4F | 064-U-004-1-F02 | 13531958 |

*This catalog includes products which are not yet production released.*
*All catalog parts are available from low volume tooling.*
*Many catalog parts are available from high volume production tooling.*
*For parts availability, lead times and additional product information, contact Delphi Connection Systems at 248.813.2334.*

**NOTE:** Specifications in this catalog are for general reference only and are subject to change without notice. To verify product information, please contact a Delphi representative.

# 064 Header
# One-Row – Single Module

## 5-way Unsealed - Right Angle

**Shown: Index 5A**

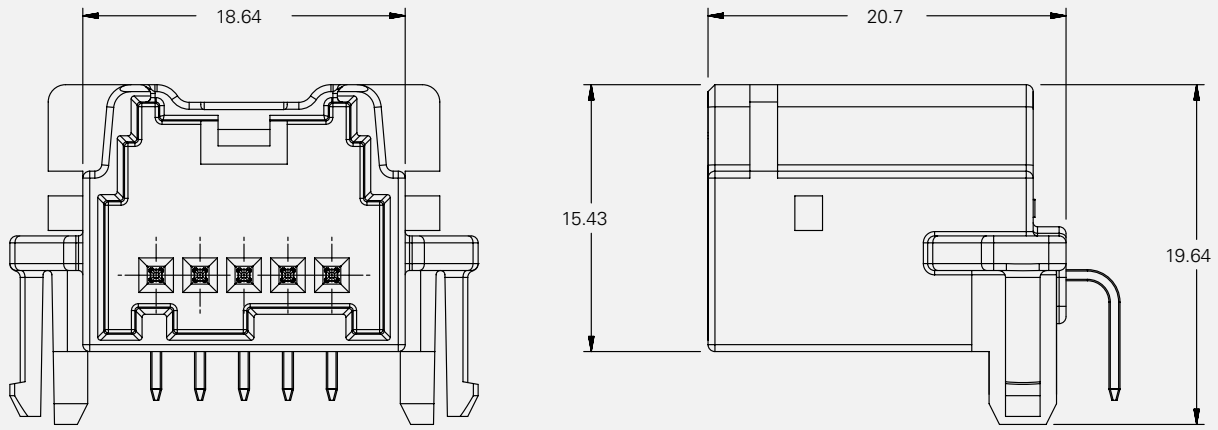


*Dimensions shown in millimeters.*

| Part Number | Material | Color | Index | USCAR Cross-Reference | Mating Connector |
|---|---|---|---|---|---|
| | | | | | MicroHVT |
| 15462860 | PPA GF33 HS | Black | 5A | 064-U-005-1-A02 | PE107551 |
| 15462861 | PPA GF33 HS | Gray | 5B | 064-U-005-1-B02 | PE107552 |
| 15462862 | PPA GF33 HS | Brown | 5C | 064-U-005-1-C02 | PE107553 |
| 15462863 | PPA GF33 HS | Green | 5D | 064-U-005-1-D02 | PE107554 |
| 15462864 | PPA GF33 HS | Dark Blue | 5E | 064-U-005-1-E02 | PE107555 |
| 15462865 | PPA GF33 HS | Natural | 5F | 064-U-005-1-F02 | PE107556 |

*This catalog includes products which are not yet production released.*
*All catalog parts are available from low volume tooling.*
*Many catalog parts are available from high volume production tooling.*
*For parts availability, lead times and additional product information, contact Delphi Connection Systems at 248.813.2334.*

**NOTE:** Specifications in this catalog are for general reference only and are subject to change without notice. To verify product information, please contact a Delphi representative.

# 064 Header
# One-Row – Single Module

## 5-way Unsealed - Straight

**Shown: Index 5A**

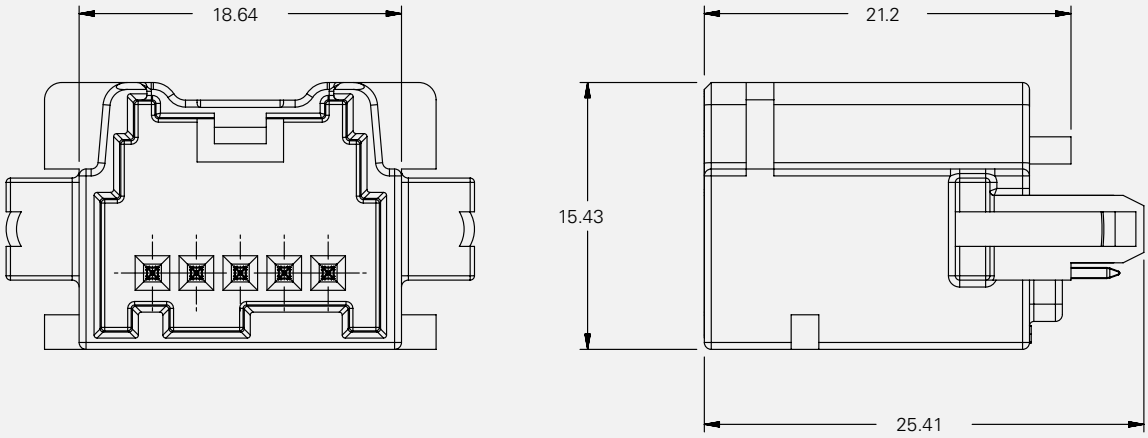


*Dimensions shown in millimeters.*

| Part Number | Material | Color | Index | USCAR Cross-Reference | Mating Connector |
|---|---|---|---|---|---|
| | | | | | MicroHVT |
| 15462829 | PPA GF33 HS | Black | 5A | 064-U-005-1-A02 | PE107551 |
| 15462830 | PPA GF33 HS | Gray | 5B | 064-U-005-1-B02 | PE107552 |
| 15462831 | PPA GF33 HS | Brown | 5C | 064-U-005-1-C02 | PE107553 |
| 15462832 | PPA GF33 HS | Green | 5D | 064-U-005-1-D02 | PE107554 |
| 15462833 | PPA GF33 HS | Dark Blue | 5E | 064-U-005-1-E02 | PE107555 |
| 15462834 | PPA GF33 HS | Natural | 5F | 064-U-005-1-F02 | PE107556 |

*This catalog includes products which are not yet production released.*
*All catalog parts are available from low volume tooling.*
*Many catalog parts are available from high volume production tooling.*
*For parts availability, lead times and additional product information, contact Delphi Connection Systems at 248.813.2334.*

**NOTE:** Specifications in this catalog are for general reference only and are subject to change without notice. To verify product information, please contact a Delphi representative.

# 064 Header
# One-Row – Single Module

## 6-way Unsealed - Right Angle

**Shown: Index 6A**

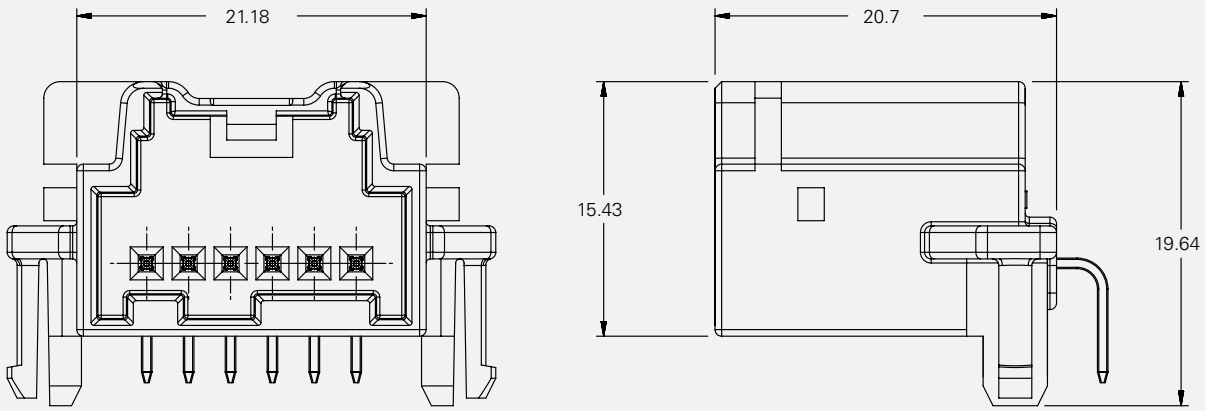


*Dimensions shown in millimeters.*

| Part Number | Material | Color | Index | USCAR Cross-Reference | Mating Connector |
|---|---|---|---|---|---|
| | | | | | MicroHVT |
| 15462866 | PPA GF33 HS | Black | 6A | 064-U-006-1-A02 | 15499927 |
| 15462867 | PPA GF33 HS | Gray | 6B | 064-U-006-1-B02 | PE107558 |
| 15462868 | PPA GF33 HS | Brown | 6C | 064-U-006-1-C02 | PE107559 |
| 15462869 | PPA GF33 HS | Green | 6D | 064-U-006-1-D02 | PE107560 |
| 15462870 | PPA GF33 HS | Dark Blue | 6E | 064-U-006-1-E02 | PE107561 |
| 15462871 | PPA GF33 HS | Natural | 6F | 064-U-006-1-F02 | PE107562 |

*This catalog includes products which are not yet production released.*
*All catalog parts are available from low volume tooling.*
*Many catalog parts are available from high volume production tooling.*
*For parts availability, lead times and additional product information, contact Delphi Connection Systems at 248.813.2334.*

**NOTE:** Specifications in this catalog are for general reference only and are subject to change without notice. To verify product information, please contact a Delphi representative.

# 064 Header
# One-Row – Single Module

## 6-way Unsealed - Straight

**Shown: Index 6A**

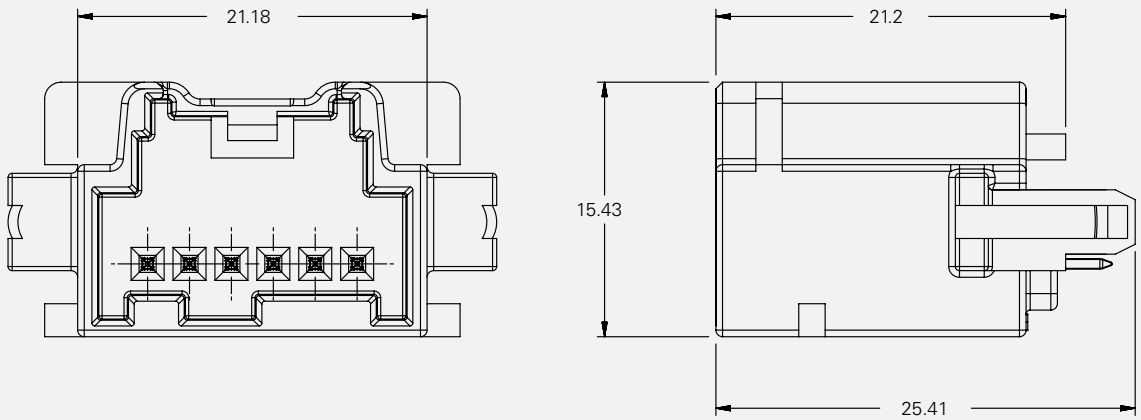


*Dimensions shown in millimeters.*

| Part Number | Material | Color | Index | USCAR Cross-Reference | Mating Connector |
|---|---|---|---|---|---|
| | | | | | MicroHVT |
| 15462835 | PPA GF33 HS | Black | 6A | 064-U-006-1-A02 | 15499927 |
| 15462836 | PPA GF33 HS | Gray | 6B | 064-U-006-1-B02 | PE107558 |
| 15462837 | PPA GF33 HS | Brown | 6C | 064-U-006-1-C02 | PE107559 |
| 15462838 | PPA GF33 HS | Green | 6D | 064-U-006-1-D02 | PE107560 |
| 15462839 | PPA GF33 HS | Dark Blue | 6E | 064-U-006-1-E02 | PE107561 |
| 15462840 | PPA GF33 HS | Natural | 6F | 064-U-006-1-F02 | PE107562 |

*This catalog includes products which are not yet production released.*
*All catalog parts are available from low volume tooling.*
*Many catalog parts are available from high volume production tooling.*
*For parts availability, lead times and additional product information, contact Delphi Connection Systems at 248.813.2334.*

**NOTE:** Specifications in this catalog are for general reference only and are subject to change without notice. To verify product information, please contact a Delphi representative.

# 064 Header
# One-Row – Single Module

## 7-way Unsealed - Right Angle

**Shown: Index 7A**

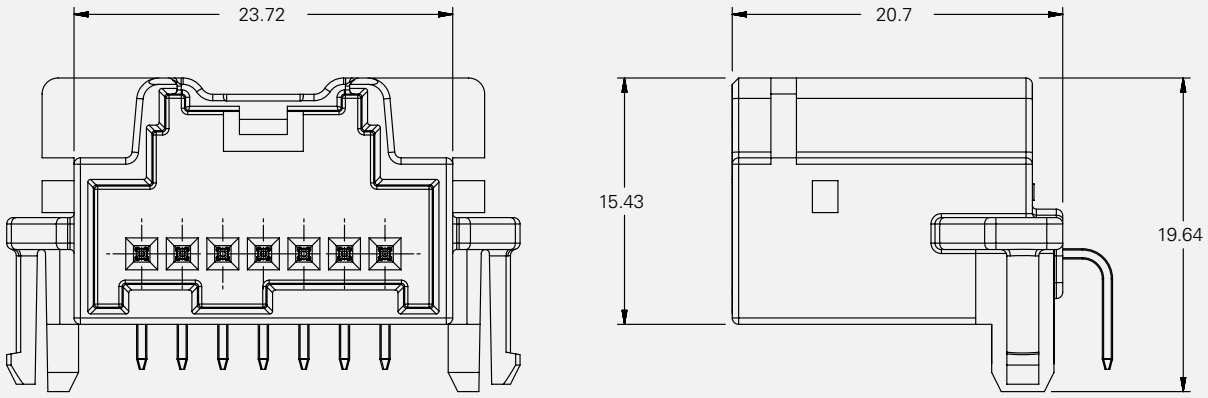


*Dimensions shown in millimeters.*

| Part Number | Material | Color | Index | USCAR Cross-Reference | Mating Connector |
|---|---|---|---|---|---|
| | | | | | MicroHVT |
| 15462872 | PPA GF33 HS | Black | 7A | 064-U-007-1-A02 | PE107563 |
| 15462873 | PPA GF33 HS | Gray | 7B | 064-U-007-1-B02 | PE107564 |
| 15462874 | PPA GF33 HS | Brown | 7C | 064-U-007-1-C02 | PE107565 |
| 15462875 | PPA GF33 HS | Green | 7D | 064-U-007-1-D02 | PE107566 |
| 15462876 | PPA GF33 HS | Dark Blue | 7E | 064-U-007-1-E02 | PE107567 |
| 15462877 | PPA GF33 HS | Natural | 7F | 064-U-007-1-F02 | PE107568 |

*This catalog includes products which are not yet production released.*
*All catalog parts are available from low volume tooling.*
*Many catalog parts are available from high volume production tooling.*
*For parts availability, lead times and additional product information, contact Delphi Connection Systems at 248.813.2334.*

**NOTE:** Specifications in this catalog are for general reference only and are subject to change without notice. To verify product information, please contact a Delphi representative.

# 064 Header
# One-Row – Single Module

## 7-way Unsealed - Straight

**Shown: Index 7A**

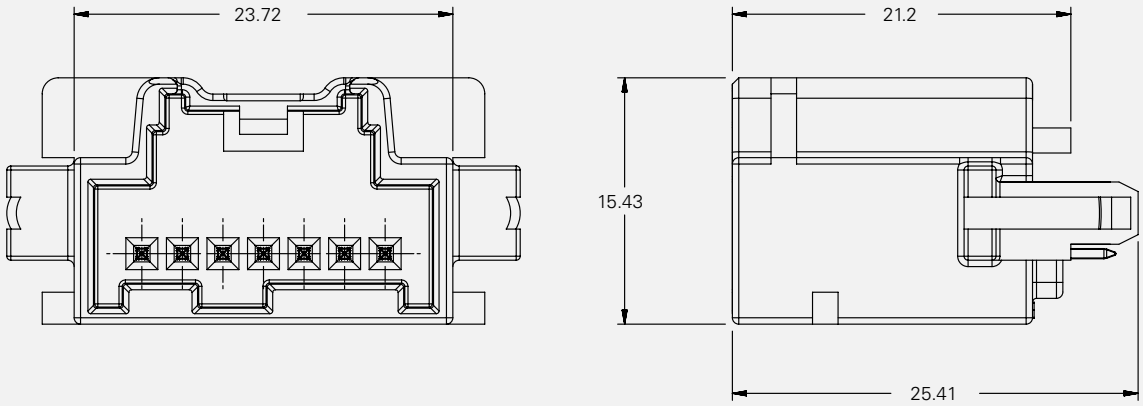


*Dimensions shown in millimeters.*

| Part Number | Material | Color | Index | USCAR Cross-Reference | Mating Connector |
|---|---|---|---|---|---|
| | | | | | MicroHVT |
| 15462841 | PPA GF33 HS | Black | 7A | 064-U-007-1-A02 | PE107563 |
| 15462842 | PPA GF33 HS | Gray | 7B | 064-U-007-1-B02 | PE107564 |
| 15462843 | PPA GF33 HS | Brown | 7C | 064-U-007-1-C02 | PE107565 |
| 15462844 | PPA GF33 HS | Green | 7D | 064-U-007-1-D02 | PE107566 |
| 15462845 | PPA GF33 HS | Dark Blue | 7E | 064-U-007-1-E02 | PE107567 |
| 15462846 | PPA GF33 HS | Natural | 7F | 064-U-007-1-F02 | PE107568 |

*This catalog includes products which are not yet production released.*
*All catalog parts are available from low volume tooling.*
*Many catalog parts are available from high volume production tooling.*
*For parts availability, lead times and additional product information, contact Delphi Connection Systems at 248.813.2334.*

**NOTE:** Specifications in this catalog are for general reference only and are subject to change without notice. To verify product information, please contact a Delphi representative.

# 064 Header
# One-Row – Single Module

## 8-way & 12-way Unsealed - Right Angle

**Shown: Index 8A**

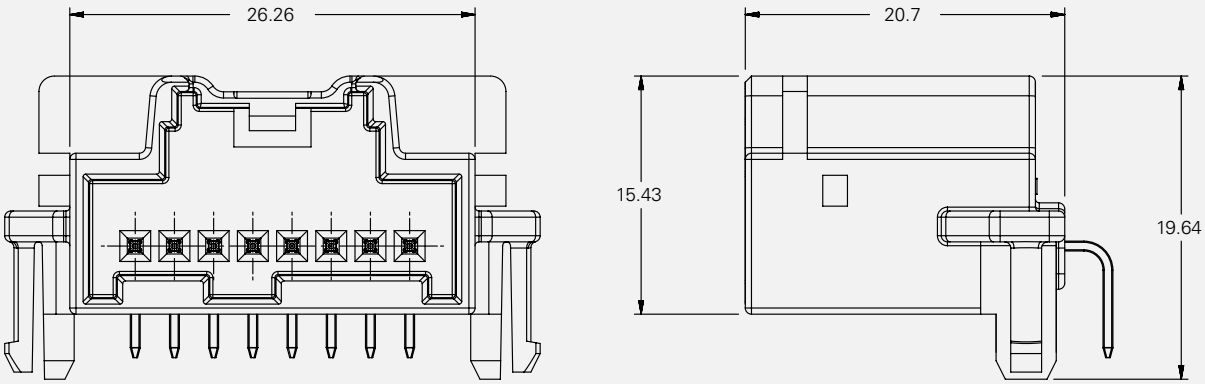


*Dimensions shown in millimeters.*

| Part Number | Material | Color | Index | USCAR Cross-Reference | Mating Connector MicroHVT |
|---|---|---|---|---|---|
| 15462878 | PPA GF33 HS | Black | 8A | 064-U-008-1-A02 | 13513470 |
| 15462879 | PPA GF33 HS | Gray | 8B | 064-U-008-1-B02 | PE107570 |
| 15462880 | PPA GF33 HS | Brown | 8C | 064-U-008-1-C02 | PE107571 |
| 15462881 | PPA GF33 HS | Green | 8D | 064-U-008-1-D02 | PE107572 |
| 15462882 | PPA GF33 HS | Dark Blue | 8E | 064-U-008-1-E02 | PE107573 |
| 15462883 | PPA GF33 HS | Natural | 8F | 064-U-008-1-F02 | PE107574 |
| PE132123 | PBT GF30 | Black | 12A | 064-U-012-1-A02 | PE135078 |

*This catalog includes products which are not yet production released.*
*All catalog parts are available from low volume tooling.*
*Many catalog parts are available from high volume production tooling.*
*For parts availability, lead times and additional product information, contact Delphi Connection Systems at 248.813.2334.*

**NOTE:** Specifications in this catalog are for general reference only and are subject to change without notice. To verify product information, please contact a Delphi representative.

# 064 Header
# One-Row – Single Module

## 8-way Unsealed - Straight

**Shown: Index 8A**

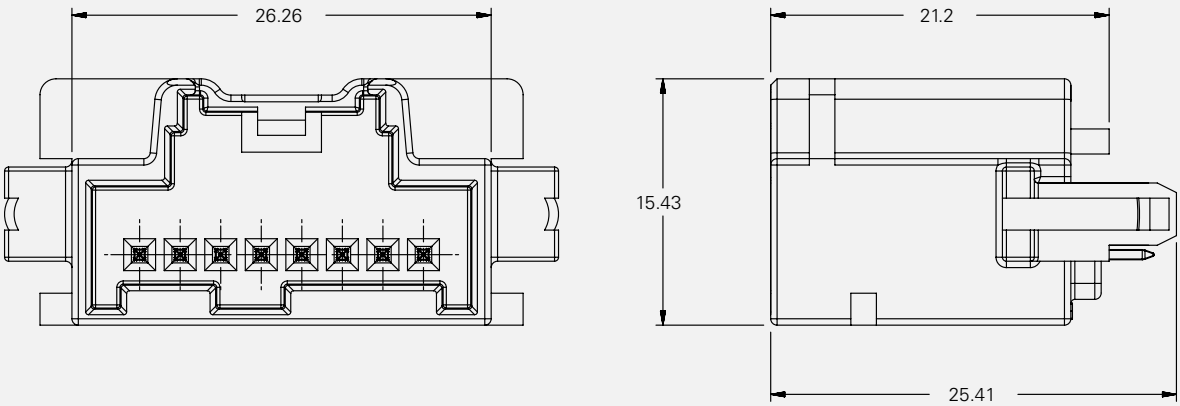


*Dimensions shown in millimeters.*

| Part Number | Material | Color | Index | USCAR Cross-Reference | Mating Connector |
|---|---|---|---|---|---|
| | | | | | MicroHVT |
| 15462847 | PPA GF33 HS | Black | 8A | 064-U-008-1-A02 | 13513470 |
| 15462848 | PPA GF33 HS | Gray | 8B | 064-U-008-1-B02 | PE107570 |
| 15462849 | PPA GF33 HS | Brown | 8C | 064-U-008-1-C02 | PE107571 |
| 15462850 | PPA GF33 HS | Green | 8D | 064-U-008-1-D02 | PE107572 |
| 15462851 | PPA GF33 HS | Dark Blue | 8E | 064-U-008-1-E02 | PE107573 |
| 15462852 | PPA GF33 HS | Natural | 8F | 064-U-008-1-F02 | PE107574 |

*This catalog includes products which are not yet production released.*
*All catalog parts are available from low volume tooling.*
*Many catalog parts are available from high volume production tooling.*
*For parts availability, lead times and additional product information, contact Delphi Connection Systems at 248.813.2334.*

**NOTE:** Specifications in this catalog are for general reference only and are subject to change without notice. To verify product information, please contact a Delphi representative.

# 064 Header
# One-Row – Combination Modules

## 16-way Unsealed - Right Angle

**Shown: Index 8A + 8B**

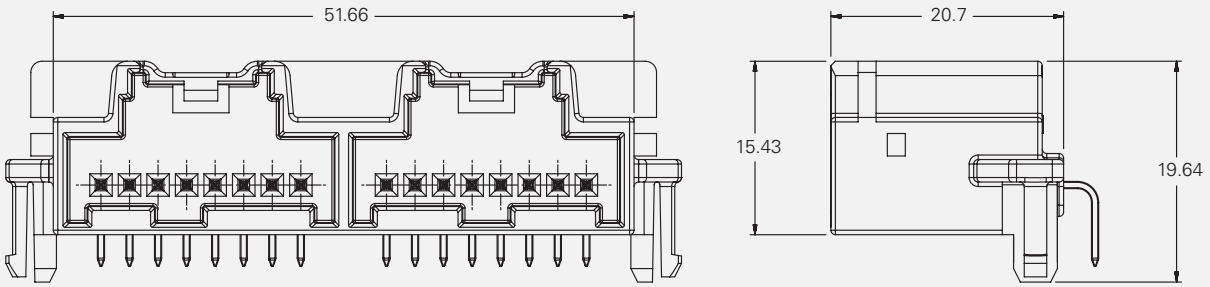


*Dimensions shown in millimeters.*

| Part Number | Material | Color | Module | Index | USCAR Cross-Reference | Mating Connector |
|---|---|---|---|---|---|---|
| | | | | | | MicroHVT |
| PE119312 | PPA GF33 HS | Black | Module 1 | 8A | 064-U-008-1-A02 | 13513470 |
| | | | Module 2 | 8B | 064-U-008-1-B02 | PE107570 |

*This catalog includes products which are not yet production released.*
*All catalog parts are available from low volume tooling.*
*Many catalog parts are available from high volume production tooling.*
*For parts availability, lead times and additional product information, contact Delphi Connection Systems at 248.813.2334.*

**NOTE:** Specifications in this catalog are for general reference only and are subject to change without notice. To verify product information, please contact a Delphi representative.

# 064 Header
# One-Row – Combination Modules

## 16-way Unsealed - Straight

**Shown: Index 8A + 8B**

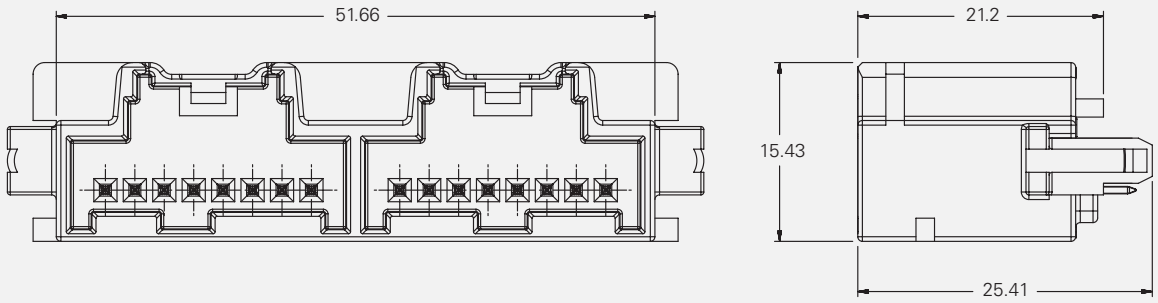


*Dimensions shown in millimeters.*

| Part Number | Material | Color | Module | Index | USCAR Cross-Reference | Mating Connector MicroHVT |
|---|---|---|---|---|---|---|
| PE119310 | PPA GF33 HS | Black | Module 1 | 8A | 064-U-008-1-A02 | 13513470 |
| | | | Module 2 | 8B | 064-U-008-1-B02 | PE107570 |

*This catalog includes products which are not yet production released.*
*All catalog parts are available from low volume tooling.*
*Many catalog parts are available from high volume production tooling.*
*For parts availability, lead times and additional product information, contact Delphi Connection Systems at 248.813.2334.*

**NOTE:** Specifications in this catalog are for general reference only and are subject to change without notice. To verify product information, please contact a Delphi representative.

# 064 Header
# One-Row – Combination Modules

## 24-way Unsealed - Right Angle

**Shown: Index 8A + 8B + 8C**

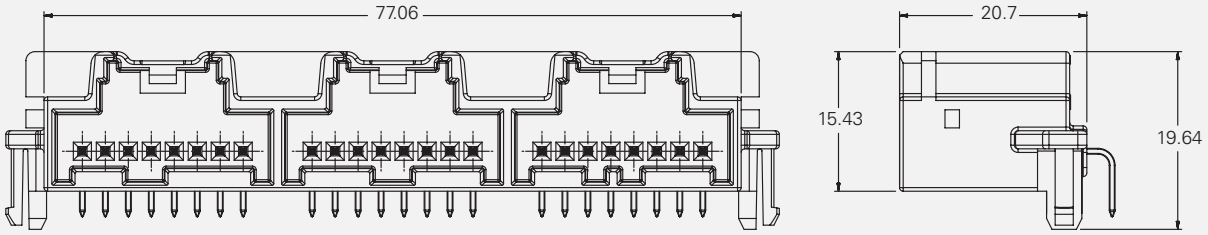


*Dimensions shown in millimeters.*

| Part Number | Material | Color | Module | Index | USCAR Cross-Reference | Mating Connector |
|---|---|---|---|---|---|---|
| | | | | | | MicroHVT |
| PE116301 | PPA GF33 HS | Black | Module 1 | 8A | 064-U-008-1-A02 | 13513470 |
| | | | Module 2 | 8B | 064-U-008-1-B02 | PE107570 |
| | | | Module 3 | 8C | 064-U-008-1-C02 | PE107571 |

*This catalog includes products which are not yet production released.*
*All catalog parts are available from low volume tooling.*
*Many catalog parts are available from high volume production tooling.*
*For parts availability, lead times and additional product information, contact Delphi Connection Systems at 248.813.2334.*

**NOTE:** Specifications in this catalog are for general reference only and are subject to change without notice. To verify product information, please contact a Delphi representative.

# 064 Header
# One-Row – Combination Modules

## 24-way Unsealed - Straight

**Shown: Index 8A + 8B + 8C**

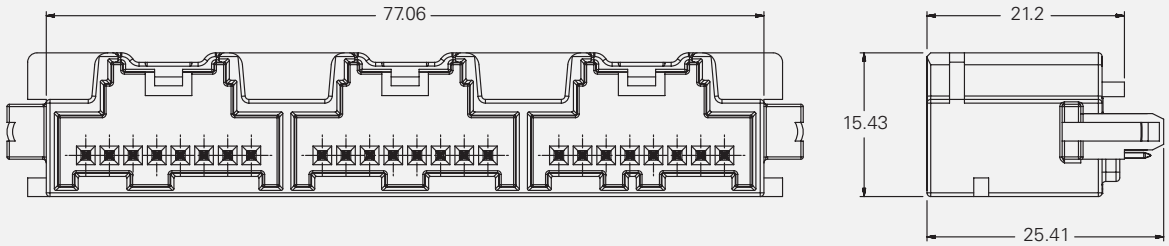


*Dimensions shown in millimeters.*

| Part Number | Material | Color | Module | Index | USCAR Cross-Reference | Mating Connector |
|---|---|---|---|---|---|---|
| | | | | | | MicroHVT |
| PE116303 | PPA GF33 HS | Black | Module 1 | 8A | 064-U-008-1-A02 | 13513470 |
| | | | Module 2 | 8B | 064-U-008-1-B02 | PE107570 |
| | | | Module 3 | 8C | 064-U-008-1-C02 | PE107571 |

*This catalog includes products which are not yet production released.*
*All catalog parts are available from low volume tooling.*
*Many catalog parts are available from high volume production tooling.*
*For parts availability, lead times and additional product information, contact Delphi Connection Systems at 248.813.2334.*

**NOTE:** Specifications in this catalog are for general reference only and are subject to change without notice. To verify product information, please contact a Delphi representative.

# 064 Header
# One-Row – Combination Modules

## 32-way Unsealed - Right Angle

**Shown: Index 8A + 8B + 8C + 8D**

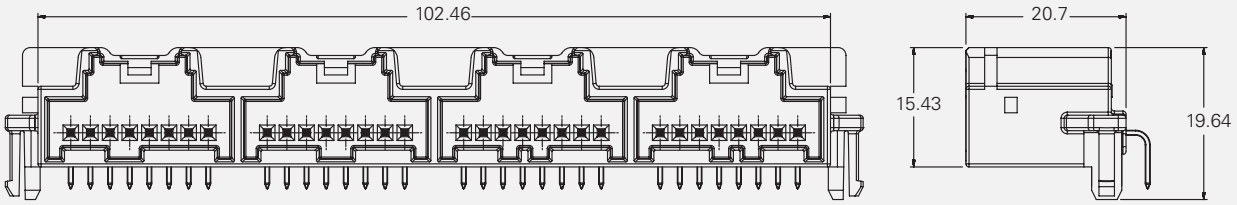


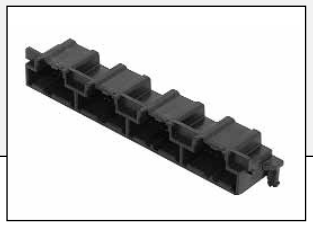

*Dimensions shown in millimeters.*

| Part Number | Material | Color | Module | Index | USCAR Cross-Reference | Mating Connector |
|---|---|---|---|---|---|---|
| | | | | | | MicroHVT |
| PE119316 | PPA GF33 HS | Black | Module 1 | 8A | 064-U-008-1-A02 | 13513470 |
| | | | Module 2 | 8B | 064-U-008-1-B02 | PE107570 |
| | | | Module 3 | 8C | 064-U-008-1-C02 | PE107571 |
| | | | Module 4 | 8D | 064-U-008-1-D02 | PE107572 |

*This catalog includes products which are not yet production released.*
*All catalog parts are available from low volume tooling.*
*Many catalog parts are available from high volume production tooling.*
*For parts availability, lead times and additional product information, contact Delphi Connection Systems at 248.813.2334.*

**NOTE:** Specifications in this catalog are for general reference only and are subject to change without notice. To verify product information, please contact a Delphi representative.

# 064 Header
# One-Row – Combination Modules

## 32-way Unsealed - Straight

**Shown: Index 8A + 8B + 8C + 8D**

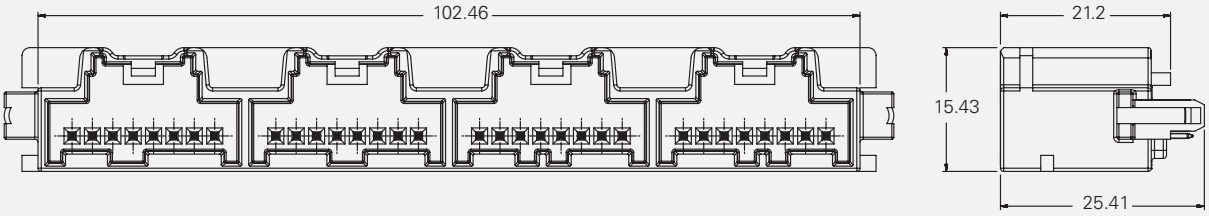


*Dimensions shown in millimeters.*

| Part Number | Material | Color | Module | Index | USCAR Cross-Reference | Mating Connector |
|---|---|---|---|---|---|---|
| | | | | | | MicroHVT |
| PE119314 | PPA GF33 HS | Black | Module 1 | 8A | 064-U-008-1-A02 | 13513470 |
| | | | Module 2 | 8B | 064-U-008-1-B02 | PE107570 |
| | | | Module 3 | 8C | 064-U-008-1-C02 | PE107571 |
| | | | Module 4 | 8D | 064-U-008-1-D02 | PE107572 |

*This catalog includes products which are not yet production released.*
*All catalog parts are available from low volume tooling.*
*Many catalog parts are available from high volume production tooling.*
*For parts availability, lead times and additional product information, contact Delphi Connection Systems at 248.813.2334.*

**NOTE:** Specifications in this catalog are for general reference only and are subject to change without notice. To verify product information, please contact a Delphi representative.

# 064 Header
# Two-Row – Single Module

## 8-way Unsealed - Right Angle

**Shown: Index 8A**

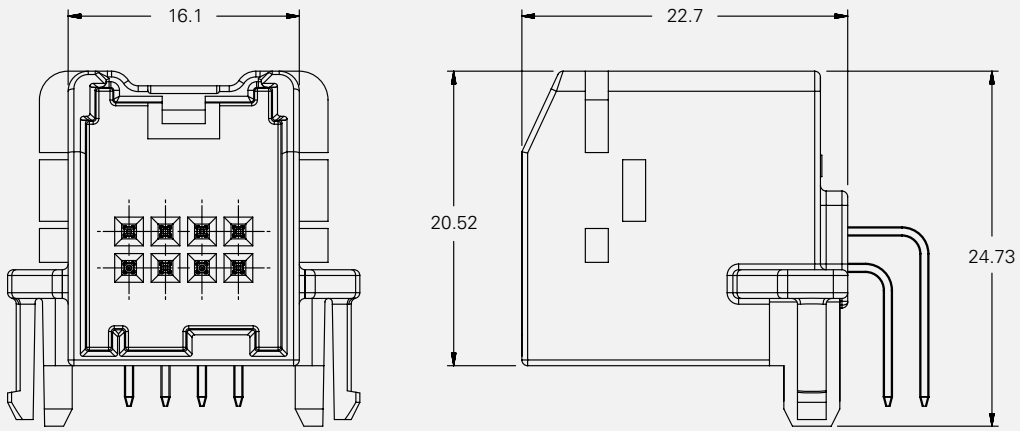


*Dimensions shown in millimeters.*

| Part Number | Material | Color | Index | USCAR Cross-Reference | Mating Connector | |
|---|---|---|---|---|---|---|
| | | | | | MicroHVT | Micro64 |
| 15420150 | PPA GF33 HS | Black | 8A | 064-U-008-2-A02 | PE107576 | 15406141 |
| 15420151 | PPA GF33 HS | Gray | 8B | 064-U-008-2-B02 | PE107577 | 15406142 |
| 15420152 | PPA GF33 HS | Brown | 8C | 064-U-008-2-C02 | PE107578 | – |
| 15420153 | PPA GF33 HS | Green | 8D | 064-U-008-2-D02 | PE107579 | – |
| 15420154 | PPA GF33 HS | Dark Blue | 8E | 064-U-008-2-E02 | PE107580 | – |
| 15420155 | PPA GF33 HS | Natural | 8F | 064-U-008-2-F02 | PE107581 | – |

*This catalog includes products which are not yet production released.*
*All catalog parts are available from low volume tooling.*
*Many catalog parts are available from high volume production tooling.*
*For parts availability, lead times and additional product information, contact Delphi Connection Systems at 248.813.2334.*

**NOTE:** Specifications in this catalog are for general reference only and are subject to change without notice. To verify product information, please contact a Delphi representative.

# 064 Header
# Two-Row – Single Module

## 8-way Unsealed - Straight

**Shown: Index 8A**

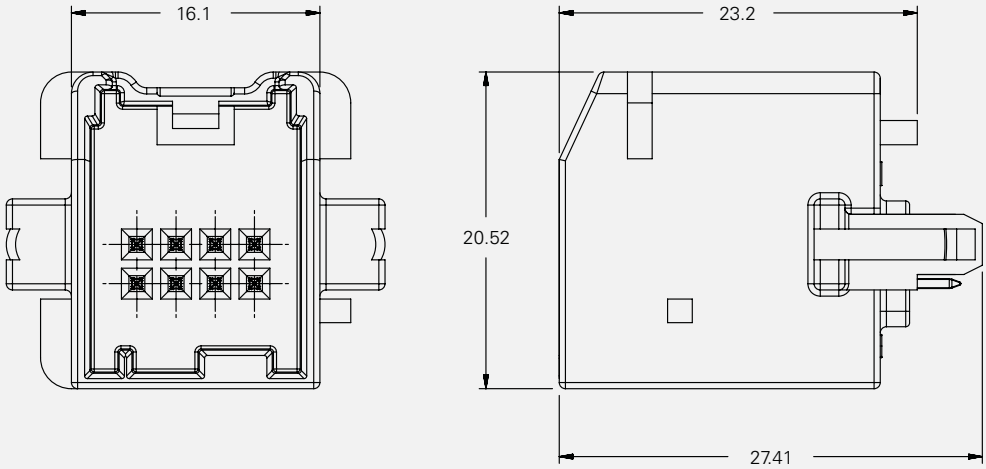


*Dimensions shown in millimeters.*

| Part Number | Material | Color | Index | USCAR Cross-Reference | Mating Connector | |
|---|---|---|---|---|---|---|
| | | | | | MicroHVT | Micro64 |
| 15423716 | PPA GF33 HS | Black | 8A | 064-U-008-2-A02 | PE107576 | 15406141 |
| 15423717 | PPA GF33 HS | Gray | 8B | 064-U-008-2-B02 | PE107577 | 15406142 |
| 15423718 | PPA GF33 HS | Brown | 8C | 064-U-008-2-C02 | PE107578 | – |
| 15423719 | PPA GF33 HS | Green | 8D | 064-U-008-2-D02 | PE107579 | – |
| 15423720 | PPA GF33 HS | Dark Blue | 8E | 064-U-008-2-E02 | PE107580 | – |
| 15423721 | PPA GF33 HS | Natural | 8F | 064-U-008-2-F02 | PE107581 | – |

*This catalog includes products which are not yet production released.*
*All catalog parts are available from low volume tooling.*
*Many catalog parts are available from high volume production tooling.*
*For parts availability, lead times and additional product information, contact Delphi Connection Systems at 248.813.2334.*

**NOTE:** Specifications in this catalog are for general reference only and are subject to change without notice. To verify product information, please contact a Delphi representative.

# 064 Header
# Two-Row – Single Module

## 10-way Unsealed - Right Angle

**Shown: Index 10A**

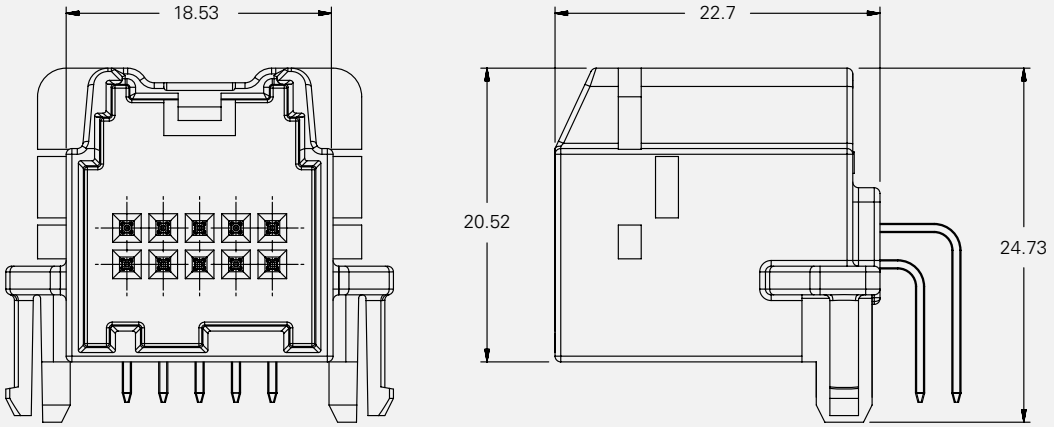


*Dimensions shown in millimeters.*

| Part Number | Material | Color | Index | USCAR Cross-Reference | Mating Connector | |
|---|---|---|---|---|---|---|
| | | | | | MicroHVT | Micro64 |
| 15420156 | PPA GF33 HS | Black | 10A | 064-U-010-2-A02 | PE107582 | 15431080 |
| 15420157 | PPA GF33 HS | Gray | 10B | 064-U-010-2-B02 | PE107583 | 15431081 |
| 15420158 | PPA GF33 HS | Brown | 10C | 064-U-010-2-C02 | PE107584 | – |
| 15420159 | PPA GF33 HS | Green | 10D | 064-U-010-2-D02 | PE107585 | – |
| 15420160 | PPA GF33 HS | Dark Blue | 10E | 064-U-010-2-E02 | PE107586 | – |
| 15420161 | PPA GF33 HS | Natural | 10F | 064-U-010-2-F02 | PE107587 | – |

*This catalog includes products which are not yet production released.*
*All catalog parts are available from low volume tooling.*
*Many catalog parts are available from high volume production tooling.*
*For parts availability, lead times and additional product information, contact Delphi Connection Systems at 248.813.2334.*

**NOTE:** Specifications in this catalog are for general reference only and are subject to change without notice. To verify product information, please contact a Delphi representative.

# 064 Header
# Two-Row – Single Module

## 10-way Unsealed - Straight

**Shown: Index 10A**

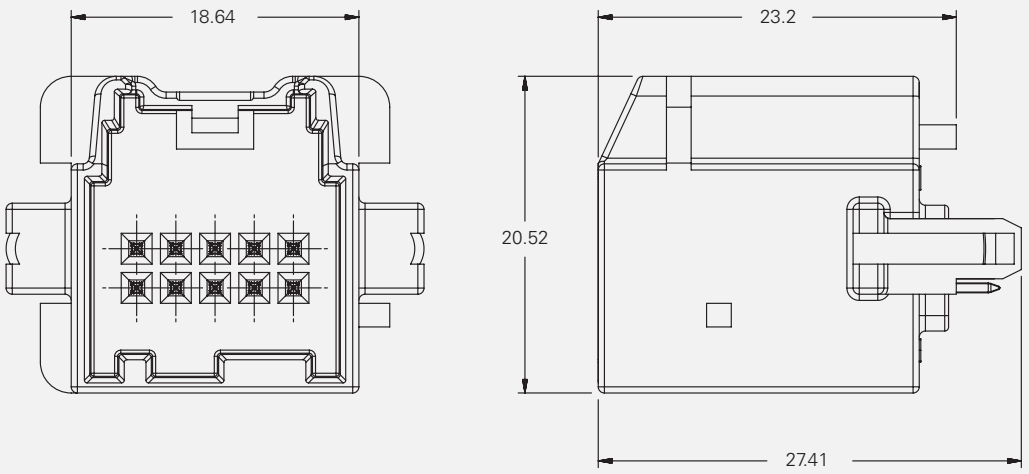


*Dimensions shown in millimeters.*

| Part Number | Material | Color | Index | USCAR Cross-Reference | Mating Connector | |
|---|---|---|---|---|---|---|
| | | | | | MicroHVT | Micro64 |
| 15423722 | PPA GF33 HS | Black | 10A | 064-U-010-2-A02 | PE107582 | 15431080 |
| 15423723 | PPA GF33 HS | Gray | 10B | 064-U-010-2-B02 | PE107583 | 15431081 |
| 15423724 | PPA GF33 HS | Brown | 10C | 064-U-010-2-C02 | PE107584 | – |
| 15423725 | PPA GF33 HS | Green | 10D | 064-U-010-2-D02 | PE107585 | – |
| 15423726 | PPA GF33 HS | Dark Blue | 10E | 064-U-010-2-E02 | PE107586 | – |
| 15423727 | PPA GF33 HS | Natural | 10F | 064-U-010-2-F02 | PE107587 | – |

*This catalog includes products which are not yet production released.*
*All catalog parts are available from low volume tooling.*
*Many catalog parts are available from high volume production tooling.*
*For parts availability, lead times and additional product information, contact Delphi Connection Systems at 248.813.2334.*

**NOTE:** Specifications in this catalog are for general reference only and are subject to change without notice. To verify product information, please contact a Delphi representative.

# 064 Header
# Two-Row – Single Module

## 12-way Unsealed - Right Angle

**Shown: Index 12A**

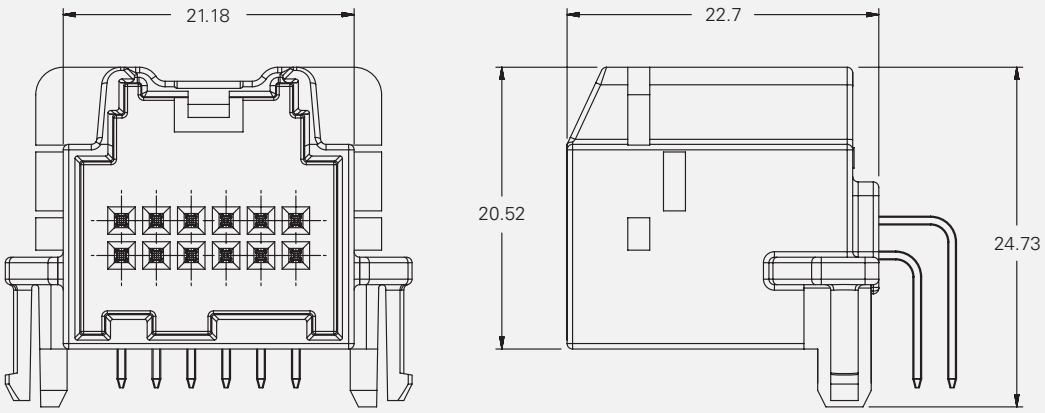


*Dimensions shown in millimeters.*

| Part Number | Material | Color | Index | USCAR Cross-Reference | Mating Connector |
|---|---|---|---|---|---|
| | | | | | MicroHVT |
| 15420162 | PPA GF33 HS | Black | 12A | 064-U-012-2-A02 | 15483208 |
| 15420163 | PPA GF33 HS | Gray | 12B | 064-U-012-2-B02 | PE107589 |
| 15420164 | PPA GF33 HS | Brown | 12C | 064-U-012-2-C02 | PE107590 |
| 15420165 | PPA GF33 HS | Green | 12D | 064-U-012-2-D02 | PE107591 |
| 15420166 | PPA GF33 HS | Dark Blue | 12E | 064-U-012-2-E02 | PE107592 |
| 15420167 | PPA GF33 HS | Natural | 12F | 064-U-012-2-F02 | PE107593 |

*This catalog includes products which are not yet production released.*
*All catalog parts are available from low volume tooling.*
*Many catalog parts are available from high volume production tooling.*
*For parts availability, lead times and additional product information, contact Delphi Connection Systems at 248.813.2334.*

**NOTE:** Specifications in this catalog are for general reference only and are subject to change without notice. To verify product information, please contact a Delphi representative.

# 064 Header
# Two-Row – Single Module

## 12-way Unsealed - Straight

**Shown: Index 12A**

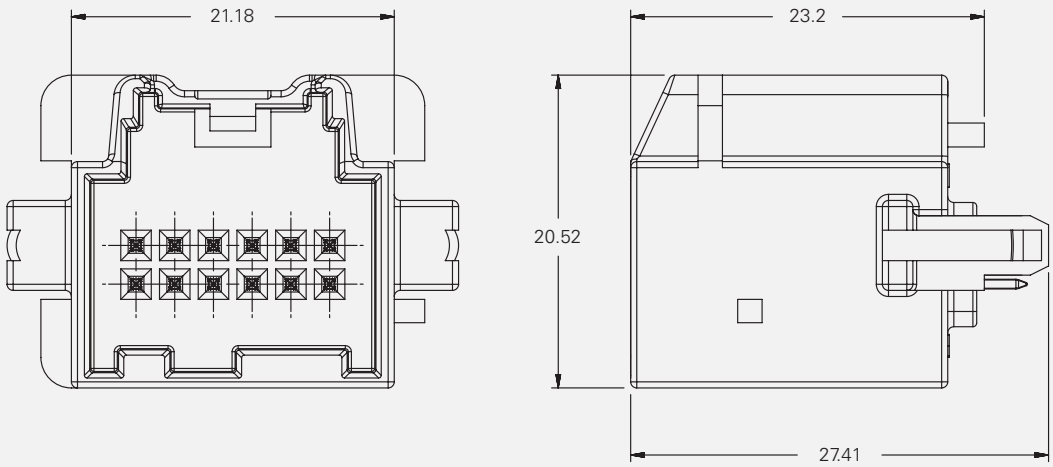


*Dimensions shown in millimeters.*

| Part Number | Material | Color | Index | USCAR Cross-Reference | Mating Connector |
|---|---|---|---|---|---|
| | | | | | MicroHVT |
| 15423728 | PPA GF33 HS | Black | 12A | 064-U-012-2-A02 | 15483208 |
| 15423729 | PPA GF33 HS | Gray | 12B | 064-U-012-2-B02 | PE107589 |
| 15423730 | PPA GF33 HS | Brown | 12C | 064-U-012-2-C02 | PE107590 |
| 15423731 | PPA GF33 HS | Green | 12D | 064-U-012-2-D02 | PE107591 |
| 15423732 | PPA GF33 HS | Dark Blue | 12E | 064-U-012-2-E02 | PE107592 |
| 15423733 | PPA GF33 HS | Natural | 12F | 064-U-012-2-F02 | PE107593 |

*This catalog includes products which are not yet production released.*
*All catalog parts are available from low volume tooling.*
*Many catalog parts are available from high volume production tooling.*
*For parts availability, lead times and additional product information, contact Delphi Connection Systems at 248.813.2334.*

**NOTE:** Specifications in this catalog are for general reference only and are subject to change without notice. To verify product information, please contact a Delphi representative.

# 064 Header
# Two-Row – Single Module

## 16-way Unsealed - Right Angle

**Shown: Index 16A**

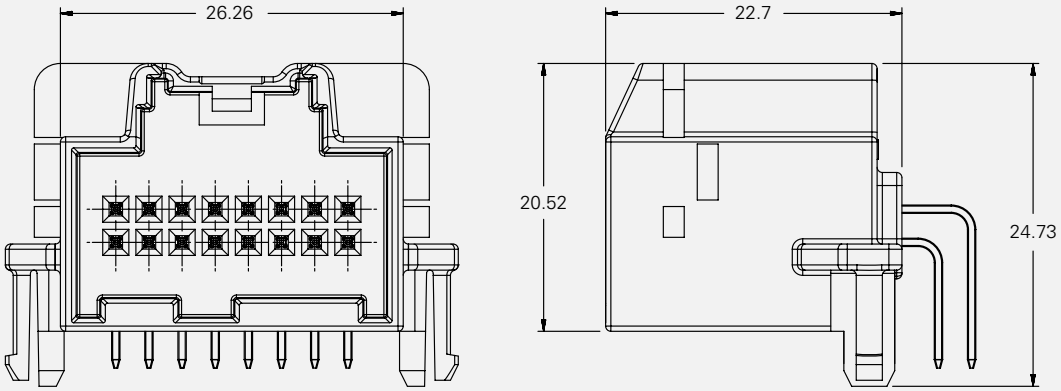


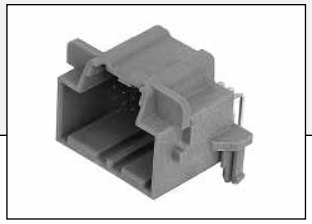

*Dimensions shown in millimeters.*

| Part Number | Material | Color | Index | USCAR Cross-Reference | Mating Connector | |
|---|---|---|---|---|---|---|
| | | | | | MicroHVT | Micro64 |
| 15420168 | PPA GF33 HS | Black | 16A | 064-U-016-2-A02 | PE107600 | 15394150 |
| 15420169 | PPA GF33 HS | Gray | 16B | 064-U-016-2-B02 | PE107601 | 15394149 |
| 15420170 | PPA GF33 HS | Brown | 16C | 064-U-016-2-C02 | PE107602 | 15394151 |
| 15420171 | PPA GF33 HS | Green | 16D | 064-U-016-2-D02 | PE107603 | 15394152 |
| 15420172 | PPA GF33 HS | Dark Blue | 16E | 064-U-016-2-E02 | PE107604 | 15394153 |
| 15420173 | PPA GF33 HS | Natural | 16F | 064-U-016-2-F02 | PE107605 | 15394154 |

*This catalog includes products which are not yet production released.*
*All catalog parts are available from low volume tooling.*
*Many catalog parts are available from high volume production tooling.*
*For parts availability, lead times and additional product information, contact Delphi Connection Systems at 248.813.2334.*

**NOTE:** Specifications in this catalog are for general reference only and are subject to change without notice. To verify product information, please contact a Delphi representative.

# 064 Header
# Two-Row – Single Module

## 16-way Unsealed - Straight

**Shown: Index 16A**

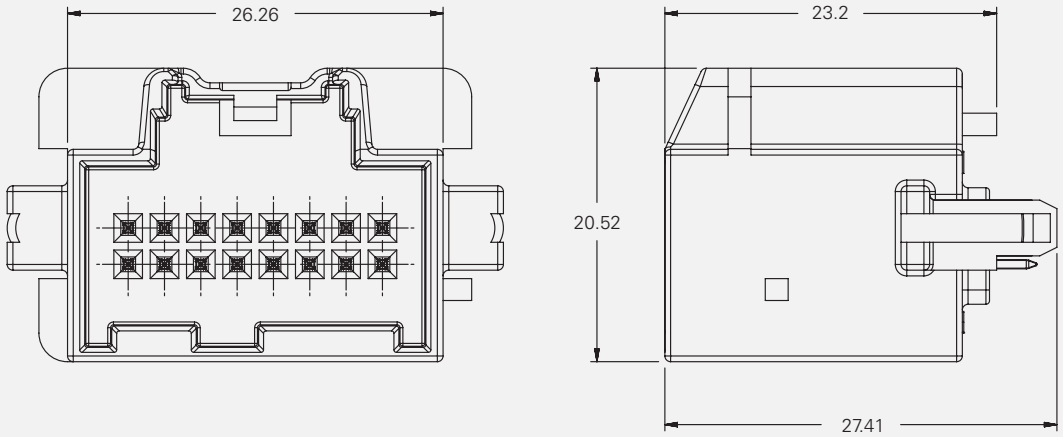


*Dimensions shown in millimeters.*

| Part Number | Material | Color | Index | USCAR Cross-Reference | Mating Connector | |
|---|---|---|---|---|---|---|
| | | | | | MicroHVT | Micro64 |
| 15423734 | PPA GF33 HS | Black | 16A | 064-U-016-2-A02 | PE107600 | 15394150 |
| 15496639 | PPA GF33 HS | Gray | 16B | 064-U-016-2-B02 | PE107601 | 15394149 |
| 15423736 | PPA GF33 HS | Brown | 16C | 064-U-016-2-C02 | PE107602 | 15394151 |
| 15423737 | PPA GF33 HS | Green | 16D | 064-U-016-2-D02 | PE107603 | 15394152 |
| 15423738 | PPA GF33 HS | Dark Blue | 16E | 064-U-016-2-E02 | PE107604 | 15394153 |
| 15423739 | PPA GF33 HS | Natural | 16F | 064-U-016-2-F02 | PE107605 | 15394154 |

*This catalog includes products which are not yet production released.*
*All catalog parts are available from low volume tooling.*
*Many catalog parts are available from high volume production tooling.*
*For parts availability, lead times and additional product information, contact Delphi Connection Systems at 248.813.2334.*

**NOTE:** Specifications in this catalog are for general reference only and are subject to change without notice. To verify product information, please contact a Delphi representative.

# 064 Header
# Two-Row – Combination Modules

## 16-way Unsealed - Right Angle

**Shown: Index 8A + 8B**

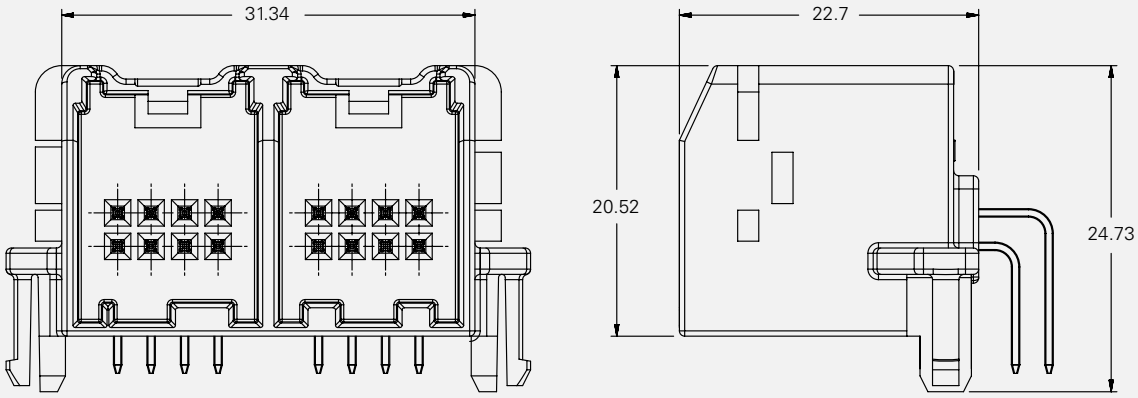


*Dimensions shown in millimeters.*

| Part Number | Material | Color | Module | Index | USCAR Cross-Reference | Mating Connector | |
|---|---|---|---|---|---|---|---|
| | | | | | | MicroHVT | Micro64 |
| 15430292 | PPA GF33 HS | Black | Module 1 | 8A | 064-U-008-2-A02 | PE107576 | 15406141 |
| | | | Module 2 | 8B | 064-U-008-2-B02 | PE107577 | 15406142 |

*This catalog includes products which are not yet production released.*
*All catalog parts are available from low volume tooling.*
*Many catalog parts are available from high volume production tooling.*
*For parts availability, lead times and additional product information, contact Delphi Connection Systems at 248.813.2334.*

**NOTE:** Specifications in this catalog are for general reference only and are subject to change without notice. To verify product information, please contact a Delphi representative.

# 064 Header
# Two-Row – Combination Modules

## 16-way Unsealed - Straight

**Shown: Index 8A + 8B**

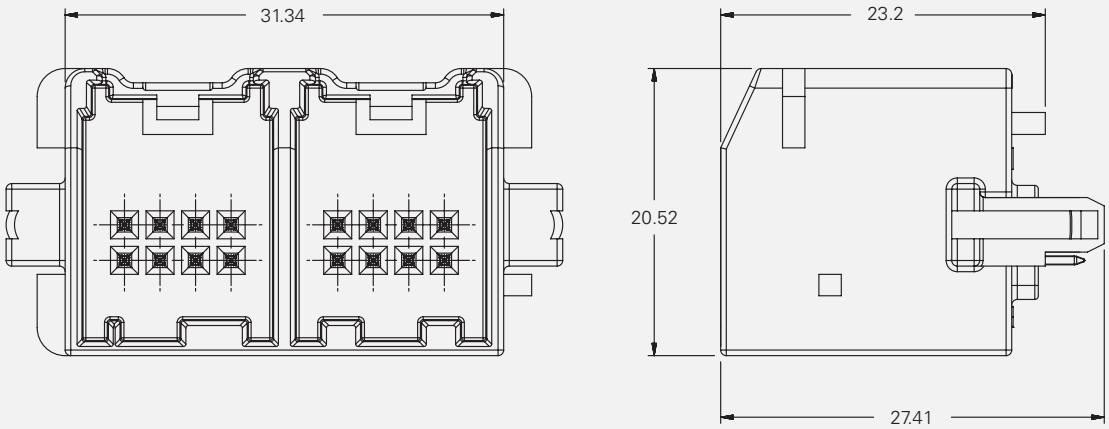


*Dimensions shown in millimeters.*

| Part Number | Material | Color | Module | Index | USCAR Cross-Reference | Mating Connector | |
|---|---|---|---|---|---|---|---|
| | | | | | | MicroHVT | Micro64 |
| 15430291 | PPA GF33 HS | Black | Module 1 | 8A | 064-U-008-2-A02 | PE107576 | 15406141 |
| | | | Module 2 | 8B | 064-U-008-2-B02 | PE107577 | 15406142 |

*This catalog includes products which are not yet production released.*
*All catalog parts are available from low volume tooling.*
*Many catalog parts are available from high volume production tooling.*
*For parts availability, lead times and additional product information, contact Delphi Connection Systems at 248.813.2334.*

**NOTE:** Specifications in this catalog are for general reference only and are subject to change without notice. To verify product information, please contact a Delphi representative.

# 064 Header
# Two-Row – Combination Modules

## 24-way Unsealed - Right Angle

**Shown: Index 8A + 16A**

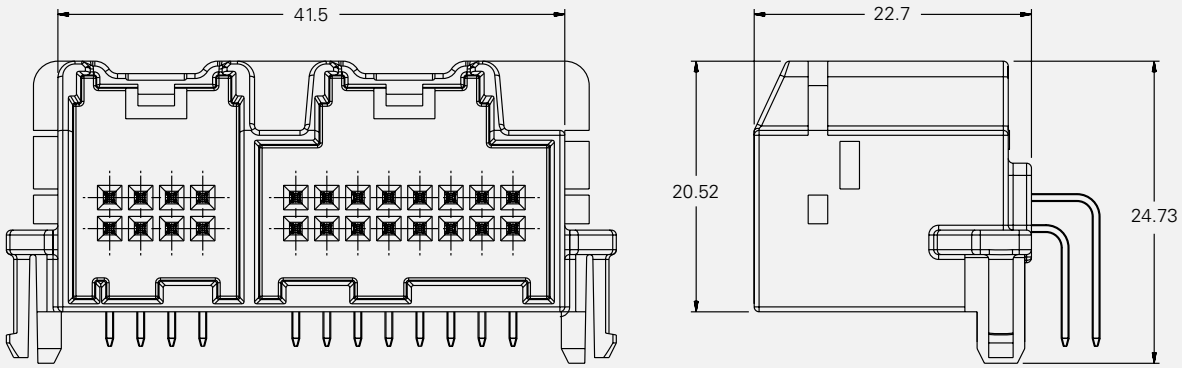


*Dimensions shown in millimeters.*

| Part Number | Material | Color | Module | Index | USCAR Cross-Reference | Mating Connector | |
|---|---|---|---|---|---|---|---|
| | | | | | | MicroHVT | Micro64 |
| 15435923 | PPA GF33 HS | Black | Module 1 | 8A | 064-U-008-2-A02 | PE107576 | 15406141 |
| | | | Module 2 | 16A | 064-U-016-2-A02 | PE107600 | 15394150 |

*This catalog includes products which are not yet production released.*
*All catalog parts are available from low volume tooling.*
*Many catalog parts are available from high volume production tooling.*
*For parts availability, lead times and additional product information, contact Delphi Connection Systems at 248.813.2334.*

**NOTE:** Specifications in this catalog are for general reference only and are subject to change without notice. To verify product information, please contact a Delphi representative.

# 064 Header
# Two-Row – Combination Modules

## 24-way Unsealed - Straight

**Shown: Index 8A + 16A**

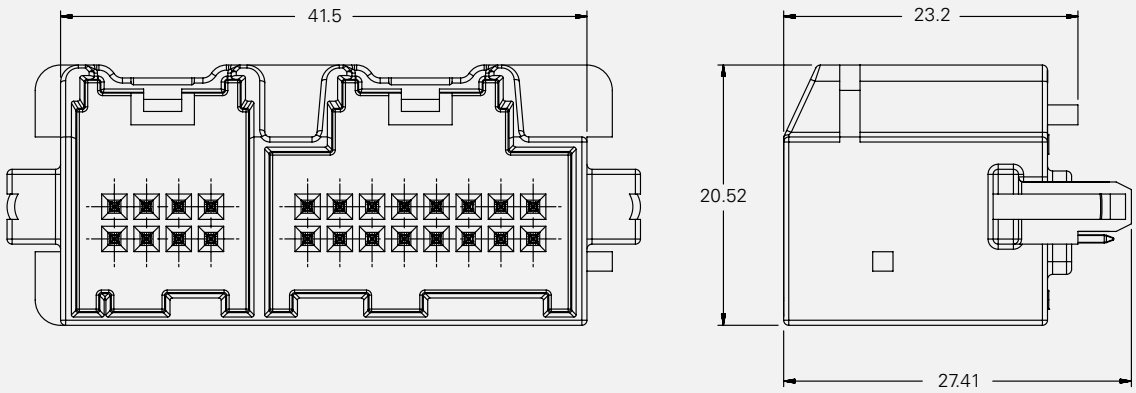


*Dimensions shown in millimeters.*

| Part Number | Material | Color | Module | Index | USCAR Cross-Reference | Mating Connector | |
|---|---|---|---|---|---|---|---|
| | | | | | | MicroHVT | Micro64 |
| 15437441 | PPA GF33 HS | Black | Module 1 | 8A | 064-U-008-2-A02 | PE107576 | 15406141 |
| | | | Module 2 | 16A | 064-U-016-2-A02 | PE107600 | 15394150 |

*This catalog includes products which are not yet production released.*
*All catalog parts are available from low volume tooling.*
*Many catalog parts are available from high volume production tooling.*
*For parts availability, lead times and additional product information, contact Delphi Connection Systems at 248.813.2334.*

**NOTE:** Specifications in this catalog are for general reference only and are subject to change without notice. To verify product information, please contact a Delphi representative.

# 064 Header
# Two-Row – Combination Modules

## 32-way Unsealed - Right Angle

**Shown: Index 16A + 16B**

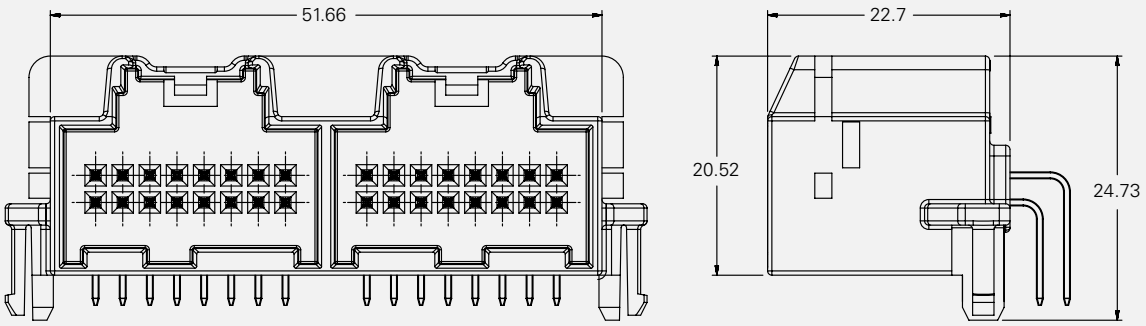


*Dimensions shown in millimeters.*

| Part Number | Material | Color | Module | Index | USCAR Cross-Reference | Mating Connector | |
|---|---|---|---|---|---|---|---|
| | | | | | | MicroHVT | Micro64 |
| 15423681 | PPA GF33 HS | Black | Module 1 | 16A | 064-U-016-2-A02 | PE107600 | 15394150 |
| | | | Module 2 | 16B | 064-U-016-2-B02 | PE107601 | 15394149 |

*This catalog includes products which are not yet production released.*
*All catalog parts are available from low volume tooling.*
*Many catalog parts are available from high volume production tooling.*
*For parts availability, lead times and additional product information, contact Delphi Connection Systems at 248.813.2334.*

**NOTE:** Specifications in this catalog are for general reference only and are subject to change without notice. To verify product information, please contact a Delphi representative.

# 064 Header
# Two-Row – Combination Modules

## 32-way Unsealed - Straight

**Shown: Index 16A + 16B**

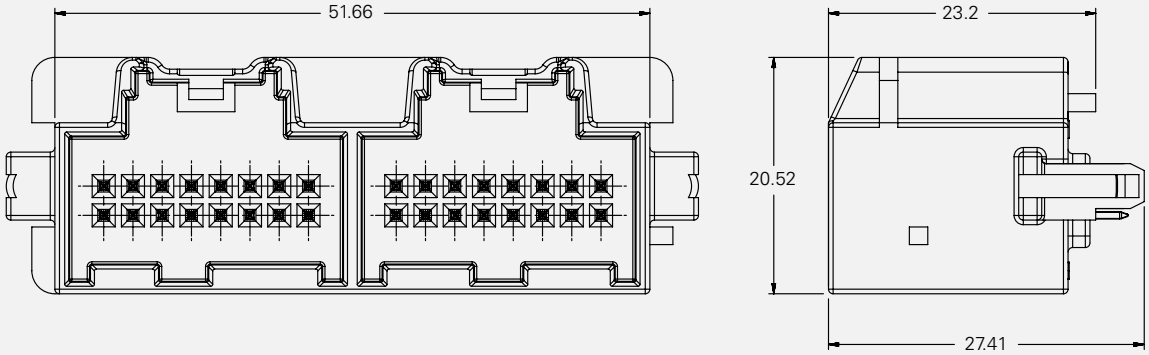


*Dimensions shown in millimeters.*

| Part Number | Material | Color | Module | Index | USCAR Cross-Reference | Mating Connector | |
|---|---|---|---|---|---|---|---|
| | | | | | | MicroHVT | Micro64 |
| 15423682 | PPA GF33 HS | Black | Module 1 | 16A | 064-U-016-2-A02 | PE107600 | 15394150 |
| | | | Module 2 | 16B | 064-U-016-2-B02 | PE107601 | 15394149 |

*This catalog includes products which are not yet production released.*
*All catalog parts are available from low volume tooling.*
*Many catalog parts are available from high volume production tooling.*
*For parts availability, lead times and additional product information, contact Delphi Connection Systems at 248.813.2334.*

**NOTE:** Specifications in this catalog are for general reference only and are subject to change without notice. To verify product information, please contact a Delphi representative.

# 064 Header
# Two-Row – Combination Modules

## 40-way Unsealed - Right Angle

**Shown: Index 8A + 16A + 16B**

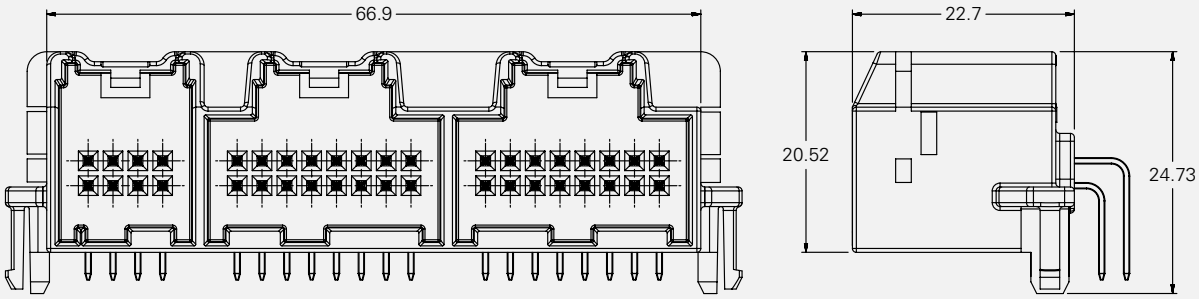


*Dimensions shown in millimeters.*

| Part Number | Material | Color | Module | Index | USCAR Cross-Reference | Mating Connector | |
|---|---|---|---|---|---|---|---|
| | | | | | | MicroHVT | Micro64 |
| 15422816 | PPA GF33 HS | Black | Module 1 | 8A | 064-U-008-2-A02 | PE107576 | 15406141 |
| | | | Module 2 | 16A | 064-U-016-2-A02 | PE107600 | 15394150 |
| | | | Module 3 | 16B | 064-U-016-2-B02 | PE107601 | 15394149 |

*This catalog includes products which are not yet production released.*
*All catalog parts are available from low volume tooling.*
*Many catalog parts are available from high volume production tooling.*
*For parts availability, lead times and additional product information, contact Delphi Connection Systems at 248.813.2334.*

**NOTE:** Specifications in this catalog are for general reference only and are subject to change without notice. To verify product information, please contact a Delphi representative.

# 064 Header
# Two-Row – Combination Modules

## 40-way Unsealed - Straight

**Shown: Index 8A + 16A + 16B**

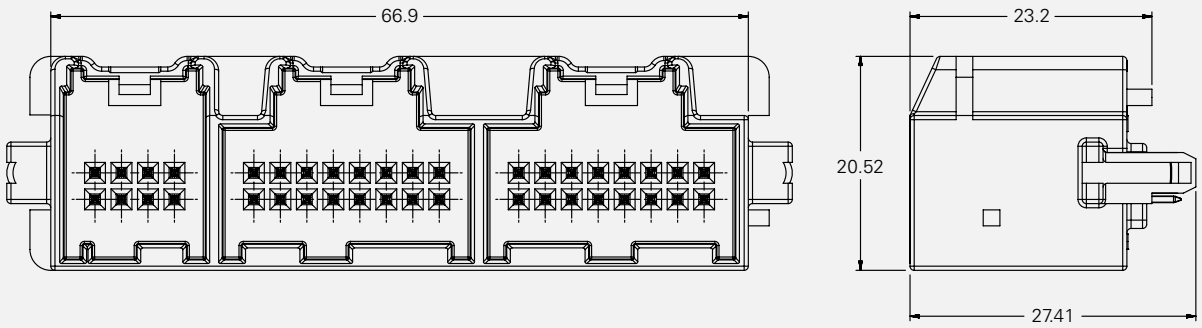


*Dimensions shown in millimeters.*

| Part Number | Material | Color | Module | Index | USCAR Cross-Reference | Mating Connector | |
|---|---|---|---|---|---|---|---|
| | | | | | | MicroHVT | Micro64 |
| 15423679 | PPA GF33 HS | Black | Module 1 | 8A | 064-U-008-2-A02 | PE107576 | 15406141 |
| | | | Module 2 | 16A | 064-U-016-2-A02 | PE107600 | 15394150 |
| | | | Module 3 | 16B | 064-U-016-2-B02 | PE107601 | 15394149 |

*This catalog includes products which are not yet production released.*
*All catalog parts are available from low volume tooling.*
*Many catalog parts are available from high volume production tooling.*
*For parts availability, lead times and additional product information, contact Delphi Connection Systems at 248.813.2334.*

**NOTE:** Specifications in this catalog are for general reference only and are subject to change without notice. To verify product information, please contact a Delphi representative.

# 064 Header
# Two-Row – Combination Modules

## 42-way Unsealed - Right Angle

**Shown: Index 10A + 16A + 16B**

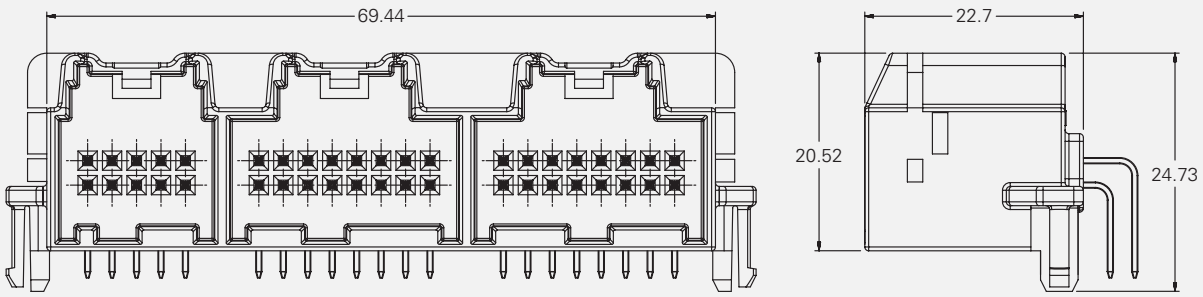


*Dimensions shown in millimeters.*

| Part Number | Material | Color | Module | Index | USCAR Cross-Reference | Mating Connector | |
|---|---|---|---|---|---|---|---|
| | | | | | | MicroHVT | Micro64 |
| 15422817 | PPA GF33 HS | Black | Module 1 | 10A | 064-U-010-2-A02 | PE107582 | 15431080 |
| | | | Module 2 | 16A | 064-U-016-2-A02 | PE107600 | 15394150 |
| | | | Module 3 | 16B | 064-U-016-2-B02 | PE107601 | 15394149 |

*This catalog includes products which are not yet production released.*
*All catalog parts are available from low volume tooling.*
*Many catalog parts are available from high volume production tooling.*
*For parts availability, lead times and additional product information, contact Delphi Connection Systems at 248.813.2334.*

**NOTE:** Specifications in this catalog are for general reference only and are subject to change without notice. To verify product information, please contact a Delphi representative.

# 064 Header
# Two-Row – Combination Modules

## 42-way Unsealed - Straight

**Shown: Index 10A + 16A + 16B**

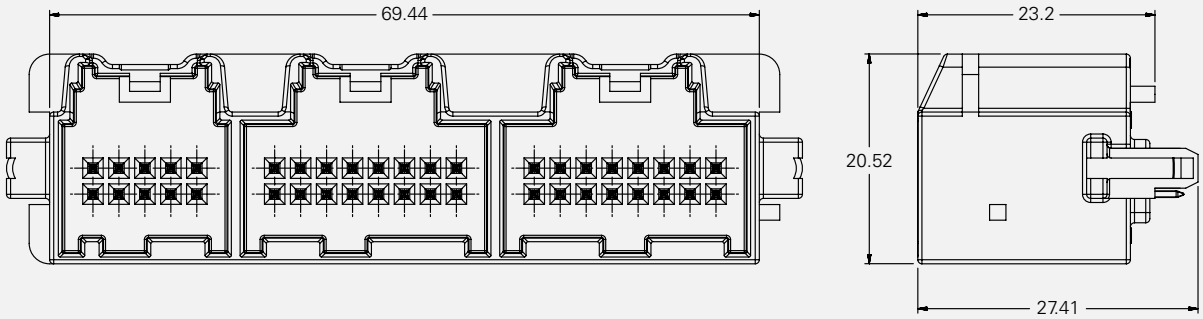


*Dimensions shown in millimeters.*

| Part Number | Material | Color | Module | Index | USCAR Cross-Reference | Mating Connector | |
|---|---|---|---|---|---|---|---|
| | | | | | | MicroHVT | Micro64 |
| 15423672 | PPA GF33 HS | Black | Module 1 | 10A | 064-U-010-2-A02 | PE107582 | 15431080 |
| | | | Module 2 | 16A | 064-U-016-2-A02 | PE107600 | 15394150 |
| | | | Module 3 | 16B | 064-U-016-2-B02 | PE107601 | 15394149 |

*This catalog includes products which are not yet production released.*
*All catalog parts are available from low volume tooling.*
*Many catalog parts are available from high volume production tooling.*
*For parts availability, lead times and additional product information, contact Delphi Connection Systems at 248.813.2334.*

**NOTE:** Specifications in this catalog are for general reference only and are subject to change without notice. To verify product information, please contact a Delphi representative.

# 064 Header
# Two-Row – Combination Modules

## 44-way Unsealed - Right Angle

**Shown: Index 12A + 16A + 16B**

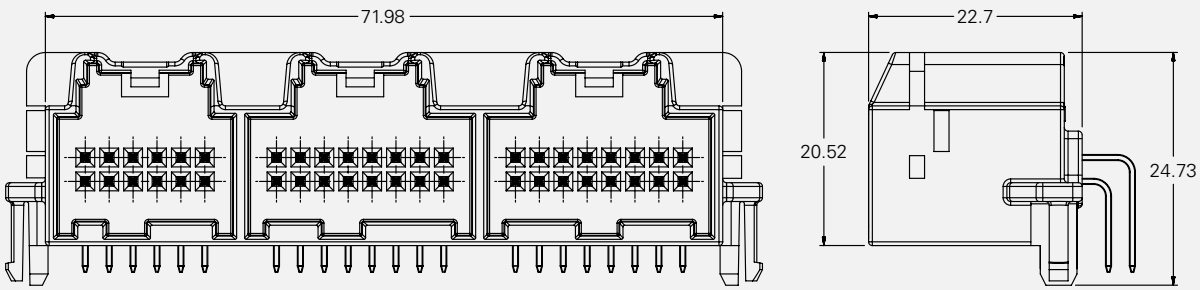


*Dimensions shown in millimeters.*

| Part Number | Material | Color | Module | Index | USCAR Cross-Reference | Mating Connector | |
|---|---|---|---|---|---|---|---|
| | | | | | | MicroHVT | Micro64 |
| 15422818 | PPA GF33 HS | Black | Module 1 | 12A | 064-U-012-2-A02 | 15483208 | — |
| | | | Module 2 | 16A | 064-U-016-2-A02 | PE107600 | 15394150 |
| | | | Module 3 | 16B | 064-U-016-2-B02 | PE107601 | 15394149 |

*This catalog includes products which are not yet production released.*
*All catalog parts are available from low volume tooling.*
*Many catalog parts are available from high volume production tooling.*
*For parts availability, lead times and additional product information, contact Delphi Connection Systems at 248.813.2334.*

**NOTE:** Specifications in this catalog are for general reference only and are subject to change without notice. To verify product information, please contact a Delphi representative.

# 064 Header
# Two-Row – Combination Modules

## 44-way Unsealed - Straight

**Shown: Index 12A + 16A + 16B**

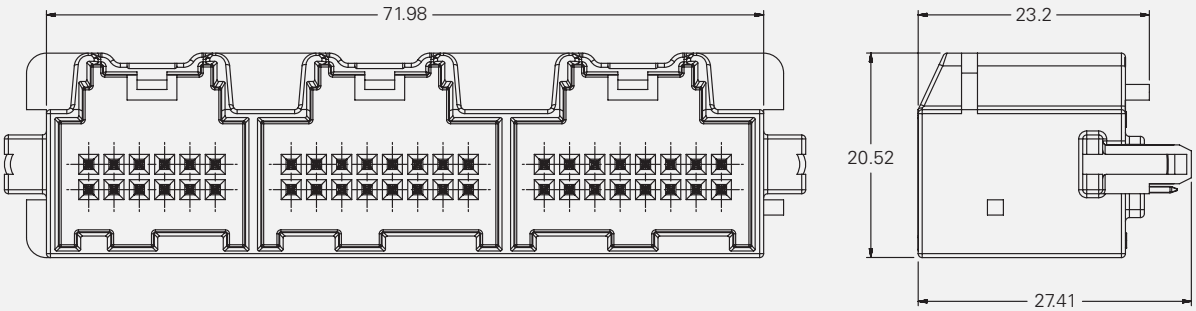


*Dimensions shown in millimeters.*

| Part Number | Material | Color | Module | Index | USCAR Cross-Reference | Mating Connector | |
|---|---|---|---|---|---|---|---|
| | | | | | | MicroHVT | Micro64 |
| 15423673 | PPA GF33 HS | Black | Module 1 | 12A | 064-U-012-2-A02 | 15483208 | — |
| | | | Module 2 | 16A | 064-U-016-2-A02 | PE107600 | 15394150 |
| | | | Module 3 | 16B | 064-U-016-2-B02 | PE107601 | 15394149 |

*This catalog includes products which are not yet production released.*
*All catalog parts are available from low volume tooling.*
*Many catalog parts are available from high volume production tooling.*
*For parts availability, lead times and additional product information, contact Delphi Connection Systems at 248.813.2334.*

**NOTE:** Specifications in this catalog are for general reference only and are subject to change without notice. To verify product information, please contact a Delphi representative.

# 064 Header
# Two-Row – Combination Modules

## 48-way Unsealed - Right Angle

**Shown: Index 16A + 16B + 16C**

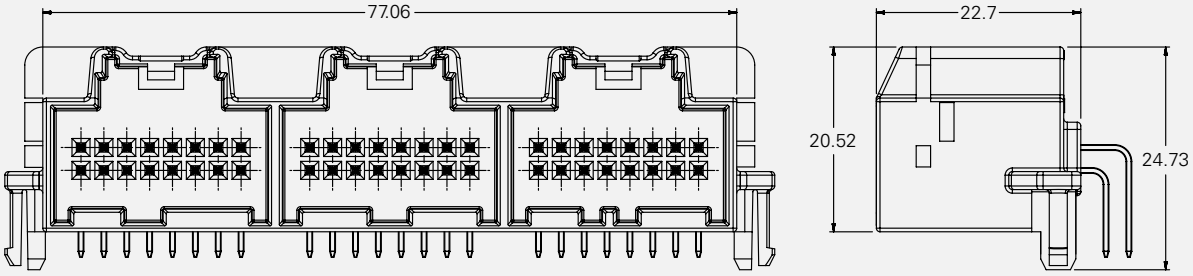


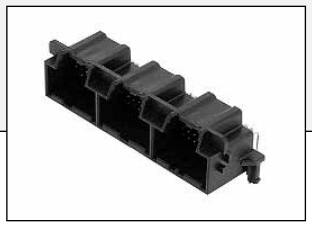

*Dimensions shown in millimeters.*

| Part Number | Material | Color | Module | Index | USCAR Cross-Reference | Mating Connector | |
|---|---|---|---|---|---|---|---|
| | | | | | | MicroHVT | Micro64 |
| 15422819 | PPA GF33 HS | Black | Module 1 | 16A | 064-U-016-2-A02 | PE107600 | 15394150 |
| | | | Module 2 | 16B | 064-U-016-2-B02 | PE107601 | 15394149 |
| | | | Module 3 | 16C | 064-U-016-2-C02 | PE107602 | 15394151 |

*This catalog includes products which are not yet production released.*
*All catalog parts are available from low volume tooling.*
*Many catalog parts are available from high volume production tooling.*
*For parts availability, lead times and additional product information, contact Delphi Connection Systems at 248.813.2334.*

**NOTE:** Specifications in this catalog are for general reference only and are subject to change without notice. To verify product information, please contact a Delphi representative.

# 064 Header
# Two-Row – Combination Modules

## 48-way Unsealed - Straight

**Shown: Index 16A + 16B + 16C**

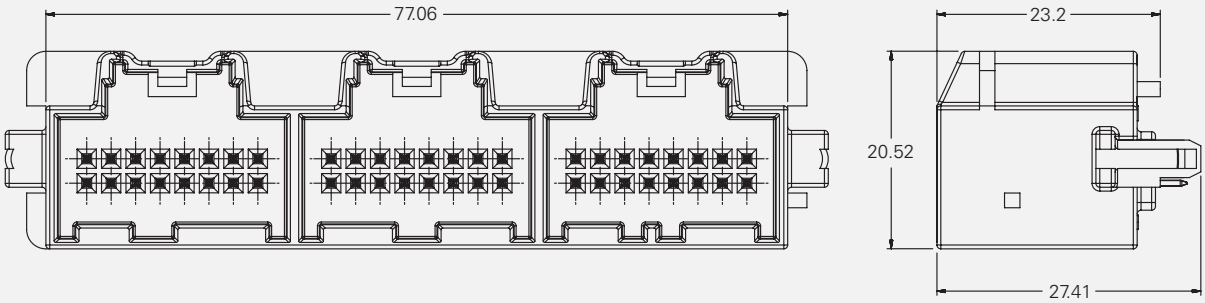


*Dimensions shown in millimeters.*

| Part Number | Material | Color | Module | Index | USCAR Cross-Reference | Mating Connector | |
|---|---|---|---|---|---|---|---|
| | | | | | | MicroHVT | Micro64 |
| 15423674 | PPA GF33 HS | Black | Module 1 | 16A | 064-U-016-2-A02 | PE107600 | 15394150 |
| | | | Module 2 | 16B | 064-U-016-2-B02 | PE107601 | 15394149 |
| | | | Module 3 | 16C | 064-U-016-2-C02 | PE107602 | 15394151 |

*This catalog includes products which are not yet production released.*
*All catalog parts are available from low volume tooling.*
*Many catalog parts are available from high volume production tooling.*
*For parts availability, lead times and additional product information, contact Delphi Connection Systems at 248.813.2334.*

**NOTE:** Specifications in this catalog are for general reference only and are subject to change without notice. To verify product information, please contact a Delphi representative.

# 064 Header
# Two-Row – Combination Modules

## 64-way Unsealed - Right Angle

**Shown: Index 16A + 16B + 16C + 16D**

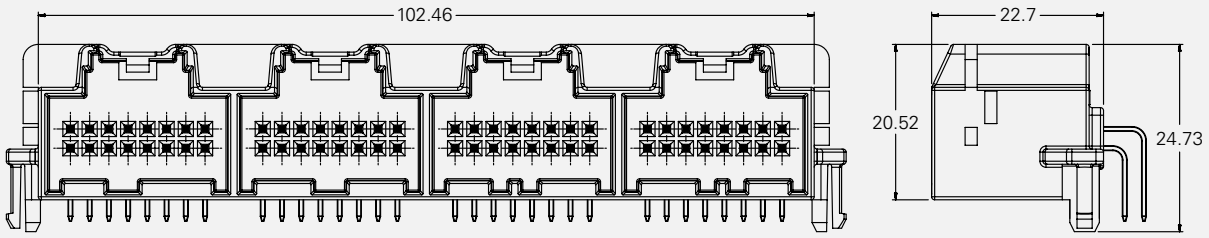


*Dimensions shown in millimeters.*

| Part Number | Material | Color | Module | Index | USCAR Cross-Reference | Mating Connector | |
|---|---|---|---|---|---|---|---|
| | | | | | | MicroHVT | Micro64 |
| 15459505 | PPA GF33 HS | Black | Module 1 | 16A | 064-U-016-2-A02 | PE107600 | 15394150 |
| | | | Module 2 | 16B | 064-U-016-2-B02 | PE107601 | 15394149 |
| | | | Module 3 | 16C | 064-U-016-2-C02 | PE107602 | 15394151 |
| | | | Module 4 | 16D | 064-U-016-2-D02 | PE107603 | 15394152 |

*This catalog includes products which are not yet production released.*
*All catalog parts are available from low volume tooling.*
*Many catalog parts are available from high volume production tooling.*
*For parts availability, lead times and additional product information, contact Delphi Connection Systems at 248.813.2334.*

**NOTE:** Specifications in this catalog are for general reference only and are subject to change without notice. To verify product information, please contact a Delphi representative.

# 064 Header
# Two-Row – Combination Modules

## 64-way Unsealed - Straight

**Shown: Index 16A + 16B + 16C + 16D**

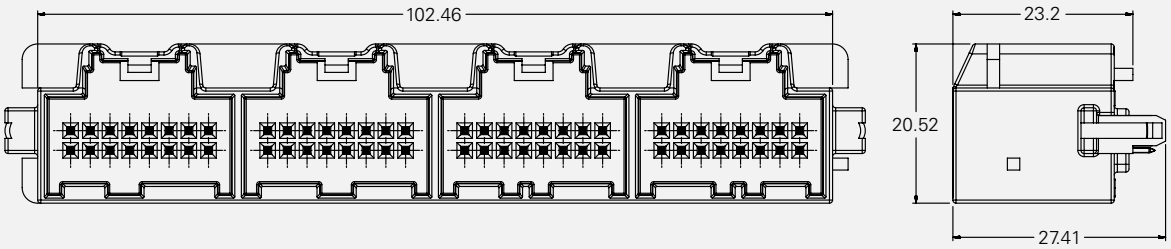


*Dimensions shown in millimeters.*

| Part Number | Material | Color | Module | Index | USCAR Cross-Reference | Mating Connector | |
|---|---|---|---|---|---|---|---|
| | | | | | | MicroHVT | Micro64 |
| 15459504 | PPA GF33 HS | Black | Module 1 | 16A | 064-U-016-2-A02 | PE107600 | 15394150 |
| | | | Module 2 | 16B | 064-U-016-2-B02 | PE107601 | 15394149 |
| | | | Module 3 | 16C | 064-U-016-2-C02 | PE107602 | 15394151 |
| | | | Module 4 | 16D | 064-U-016-2-D02 | PE107603 | 15394152 |

*This catalog includes products which are not yet production released.*
*All catalog parts are available from low volume tooling.*
*Many catalog parts are available from high volume production tooling.*
*For parts availability, lead times and additional product information, contact Delphi Connection Systems at 248.813.2334.*

**NOTE:** Specifications in this catalog are for general reference only and are subject to change without notice. To verify product information, please contact a Delphi representative.

# Mixed Series – Amplified Header Two-Row – Combination Modules

## 40-way Unsealed - Right Angle

**Shown: Index 16A + 16A + 8A**

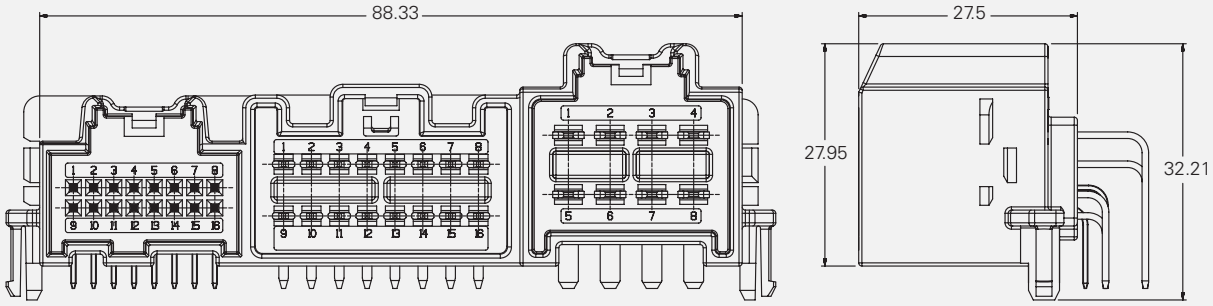


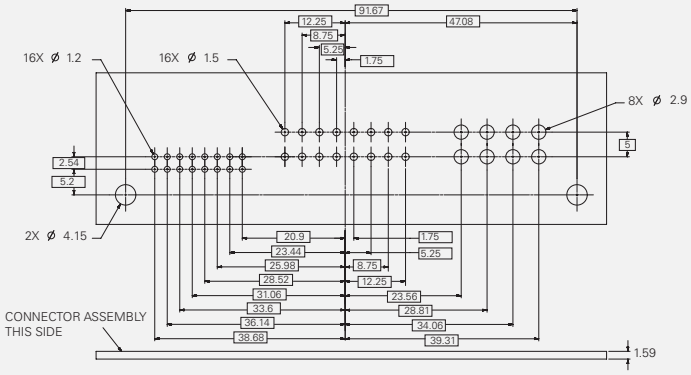


*Dimensions shown in millimeters.*

| Part Number | Material | Color | Module | Index | USCAR Cross-Reference | Mating Connector |
|---|---|---|---|---|---|---|
| PE114929 | PBT GF30 | Black | Module 1 | 16A | 064-U-016-2-A02 | 15394150 |
| | | | Module 2 | 16A | 150-U-016-2-A01 | 10734461 |
| | | | Module 3 | 8A | 280-U-008-2-A01 | 15465056 |

*This catalog includes products which are not yet production released.*
*All catalog parts are available from low volume tooling.*
*Many catalog parts are available from high volume production tooling.*
*For parts availability, lead times and additional product information, contact Delphi Connection Systems at 248.813.2334.*

**NOTE:** Specifications in this catalog are for general reference only and are subject to change without notice. To verify product information, please contact a Delphi representative.

# Mixed Series – Radio Header Two-Row – Combination Modules

## 30-way & 46-way Unsealed - Right Angle

**Shown: Index 14A + 16A**

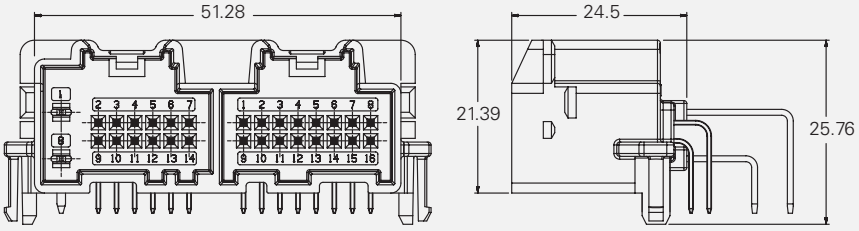


**Shown: Index 14A + 16A + 16B**

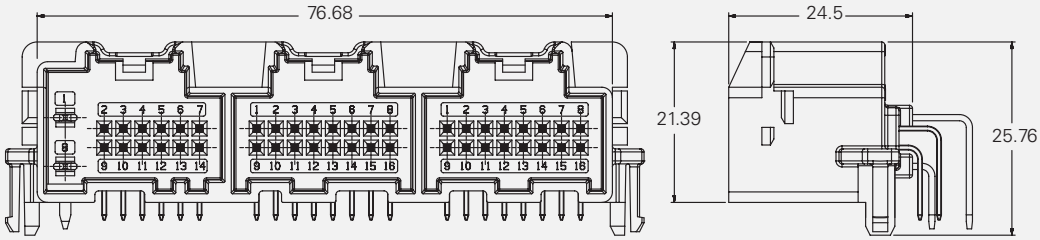


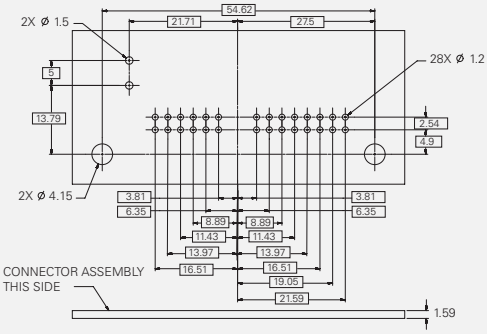


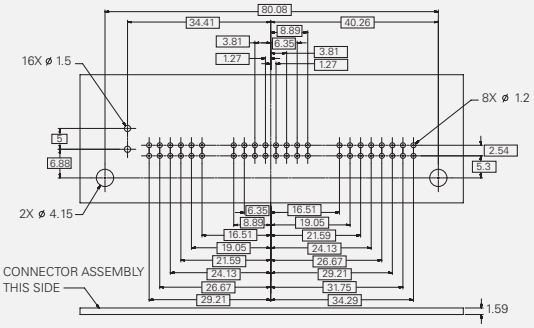


*Dimensions shown in millimeters.*

| | Part Number | Material | Color | Module | Index | USCAR Cross-Reference | Mating Connector |
|---|---|---|---|---|---|---|---|
| 30-way Radio Header | 15464948 | PBT GF30 | Black | Module 1 | 14A | 999-U-014-2-A01 | 15464950 |
| | | | | Module 2 | 16A | 064-U-016-2-A02 | 15394150 |
| 46-way Radio Header | PE108483 | PBT GF30 | Black | Module 1 | 14A | 999-U-014-2-A01 | 15464950 |
| | | | | Module 2 | 16A | 064-U-016-2-A02 | 15394150 |
| | | | | Module 3 | 16B | 064-U-016-2-B02 | 15394149 |

*This catalog includes products which are not yet production released.*
*All catalog parts are available from low volume tooling.*
*Many catalog parts are available from high volume production tooling.*
*For parts availability, lead times and additional product information, contact Delphi Connection Systems at 248.813.2334.*

**NOTE:** Specifications in this catalog are for general reference only and are subject to change without notice. To verify product information, please contact a Delphi representative.

# MicroHVT Female One-Row

## 4-way Unsealed

**Shown: Index 4A**

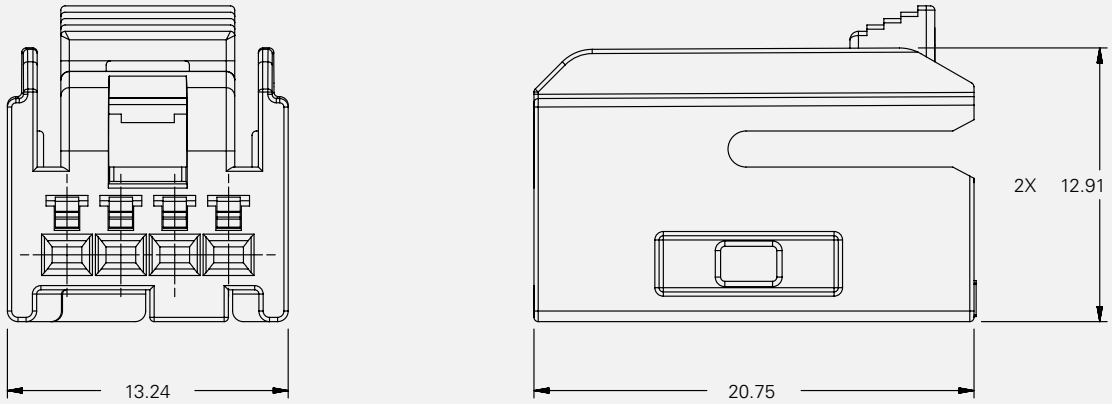


*Dimensions shown in millimeters.*

| Part Number | | Color | Index | USCAR Cross-Reference |
|---|---|---|---|---|
| Connector | Connector w/CPA | | | |
| 13513467 | 13513469 | Black | 4A | 064-U-004-1-A02 |
| PE107849 | PE107546 | Gray | 4B | 064-U-004-1-B02 |
| PE107850 | PE107547 | Brown | 4C | 064-U-004-1-C02 |
| PE107851 | PE107548 | Green | 4D | 064-U-004-1-D02 |
| PE107852 | PE107549 | Dark Blue | 4E | 064-U-004-1-E02 |
| 13531954 | 13531958 | Natural | 4F | 064-U-004-1-F02 |
| **Secondary Lock:** MicroHVT 4F - 13513473 | | | | |

*This catalog includes products which are not yet production released.*
*All catalog parts are available from low volume tooling.*
*Many catalog parts are available from high volume production tooling.*
*For parts availability, lead times and additional product information, contact Delphi Connection Systems at 248.813.2334.*

**NOTE:** Specifications in this catalog are for general reference only and are subject to change without notice. To verify product information, please contact a Delphi representative.

# MicroHVT Female One-Row

## 5-way Unsealed

**Shown: Index 5A**

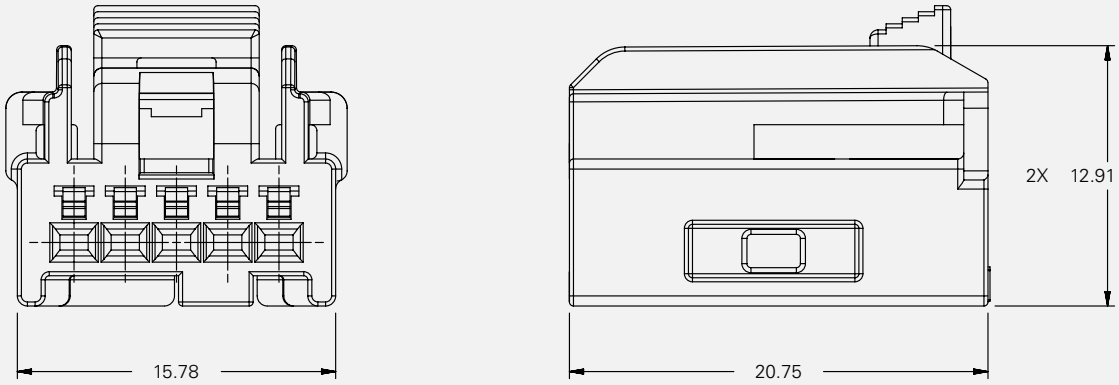


*Dimensions shown in millimeters.*

| Part Number | | Color | Index | USCAR Cross-Reference |
|---|---|---|---|---|
| Connector | Connector w/CPA | | | |
| PE102004 | PE107551 | Black | 5A | 064-U-005-1-A02 |
| PE102005 | PE107552 | Gray | 5B | 064-U-005-1-B02 |
| PE102006 | PE107553 | Brown | 5C | 064-U-005-1-C02 |
| PE102007 | PE107554 | Green | 5D | 064-U-005-1-D02 |
| PE102008 | PE107555 | Dark Blue | 5E | 064-U-005-1-E02 |
| PE102009 | PE107556 | Natural | 5F | 064-U-005-1-F02 |
| **Secondary Lock:** MicroHVT 5F - PE102090 | | | | |

*This catalog includes products which are not yet production released.*
*All catalog parts are available from low volume tooling.*
*Many catalog parts are available from high volume production tooling.*
*For parts availability, lead times and additional product information, contact Delphi Connection Systems at 248.813.2334.*

**NOTE:** Specifications in this catalog are for general reference only and are subject to change without notice. To verify product information, please contact a Delphi representative.

# MicroHVT Female One-Row

## 6-way Unsealed

**Shown: Index 6A**

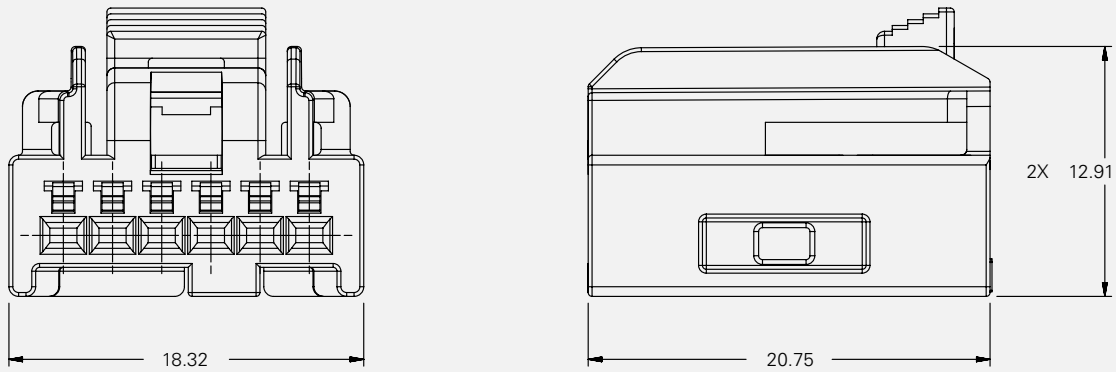


*Dimensions shown in millimeters.*

| Part Number | | Color | Index | USCAR Cross-Reference |
|---|---|---|---|---|
| Connector | Connector w/CPA | | | |
| 15499926 | 15499927 | Black | 6A | 064-U-006-1-A02 |
| PE102012 | PE107558 | Gray | 6B | 064-U-006-1-B02 |
| PE102013 | PE107559 | Brown | 6C | 064-U-006-1-C02 |
| PE102014 | PE107560 | Green | 6D | 064-U-006-1-D02 |
| PE102015 | PE107561 | Dark Blue | 6E | 064-U-006-1-E02 |
| PE102016 | PE107562 | Natural | 6F | 064-U-006-1-F02 |
| **Secondary Lock:** MicroHVT 6F - 13513474 | | | | |

*This catalog includes products which are not yet production released.*
*All catalog parts are available from low volume tooling.*
*Many catalog parts are available from high volume production tooling.*
*For parts availability, lead times and additional product information, contact Delphi Connection Systems at 248.813.2334.*

**NOTE:** Specifications in this catalog are for general reference only and are subject to change without notice. To verify product information, please contact a Delphi representative.

# MicroHVT Female One-Row

## 7-way Unsealed

**Shown: Index 7A**

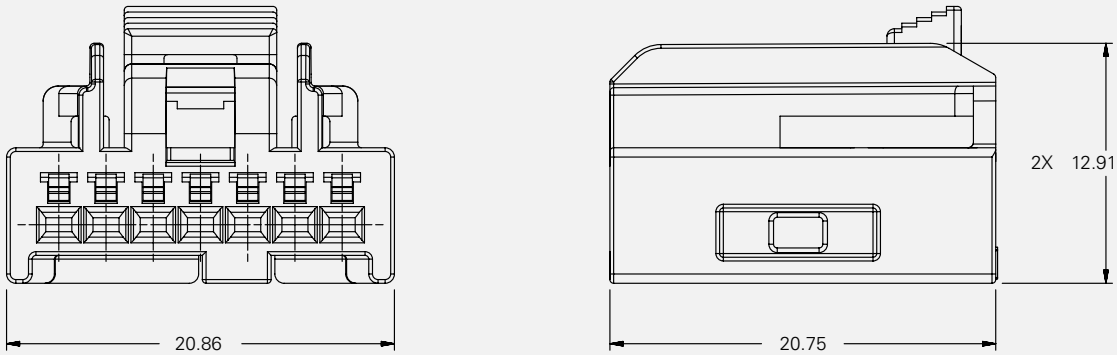


*Dimensions shown in millimeters.*

| Part Number | | Color | Index | USCAR Cross-Reference |
|---|---|---|---|---|
| Connector | Connector w/CPA | | | |
| PE102018 | PE107563 | Black | 7A | 064-U-007-1-A02 |
| PE102019 | PE107564 | Gray | 7B | 064-U-007-1-B02 |
| PE102020 | PE107565 | Brown | 7C | 064-U-007-1-C02 |
| PE102021 | PE107566 | Green | 7D | 064-U-007-1-D02 |
| PE102022 | PE107567 | Dark Blue | 7E | 064-U-007-1-E02 |
| PE102023 | PE107568 | Natural | 7F | 064-U-007-1-F02 |
| **Secondary Lock:** MicroHVT 7F - PE102092 | | | | |

*This catalog includes products which are not yet production released.*
*All catalog parts are available from low volume tooling.*
*Many catalog parts are available from high volume production tooling.*
*For parts availability, lead times and additional product information, contact Delphi Connection Systems at 248.813.2334.*

**NOTE:** Specifications in this catalog are for general reference only and are subject to change without notice. To verify product information, please contact a Delphi representative.

# MicroHVT Female One-Row

## 8-way Unsealed

**Shown: Index 8A**

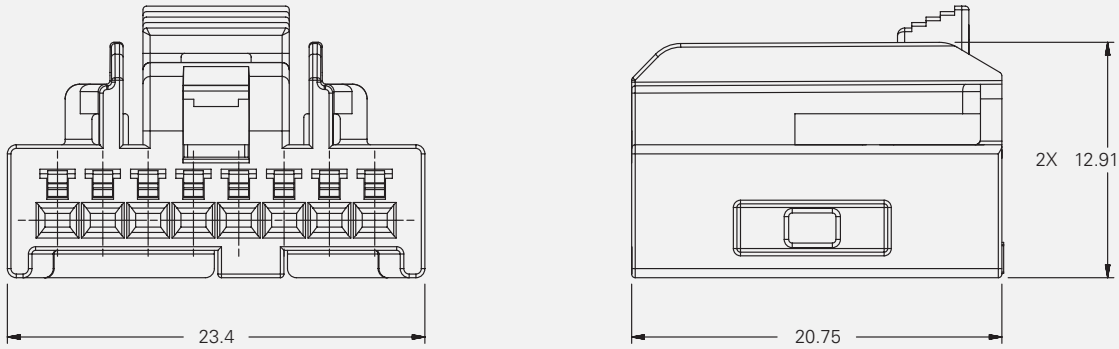


*Dimensions shown in millimeters.*

| Part Number | | Color | Index | USCAR Cross-Reference |
|---|---|---|---|---|
| Connector | Connector w/CPA | | | |
| 13513468 | 13513470 | Black | 8A | 064-U-008-1-A02 |
| PE107855 | PE107570 | Gray | 8B | 064-U-008-1-B02 |
| PE107856 | PE107571 | Brown | 8C | 064-U-008-1-C02 |
| PE107857 | PE107572 | Green | 8D | 064-U-008-1-D02 |
| PE107858 | PE107573 | Dark Blue | 8E | 064-U-008-1-E02 |
| PE107859 | PE107574 | Natural | 8F | 064-U-008-1-F02 |
| **Secondary Lock:** MicroHVT 8F - 13513475 | | | | |

*This catalog includes products which are not yet production released.*
*All catalog parts are available from low volume tooling.*
*Many catalog parts are available from high volume production tooling.*
*For parts availability, lead times and additional product information, contact Delphi Connection Systems at 248.813.2334.*

**NOTE:** Specifications in this catalog are for general reference only and are subject to change without notice. To verify product information, please contact a Delphi representative.

# MicroHVT Female Two-Row

## 8-way Unsealed

**Shown: Index 8A**

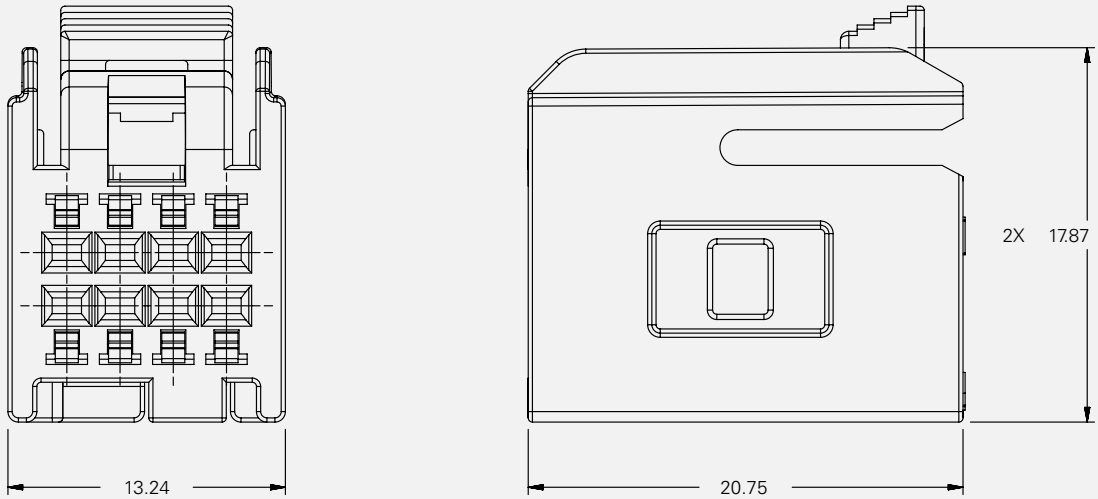


*Dimensions shown in millimeters.*

| Part Number | | Color | Index | USCAR Cross-Reference |
|---|---|---|---|---|
| Connector | Connector w/CPA | | | |
| PE107861 | PE107576 | Black | 8A | 064-U-008-2-A02 |
| PE107862 | PE107577 | Gray | 8B | 064-U-008-2-B02 |
| PE107863 | PE107578 | Brown | 8C | 064-U-008-2-C02 |
| PE107864 | PE107579 | Green | 8D | 064-U-008-2-D02 |
| PE107866 | PE107580 | Dark Blue | 8E | 064-U-008-2-E02 |
| PE107867 | PE107581 | Natural | 8F | 064-U-008-2-F02 |
| **Secondary Lock:** MicroHVT 8F - PE101938 | | | | |

*This catalog includes products which are not yet production released.*
*All catalog parts are available from low volume tooling.*
*Many catalog parts are available from high volume production tooling.*
*For parts availability, lead times and additional product information, contact Delphi Connection Systems at 248.813.2334.*

**NOTE:** Specifications in this catalog are for general reference only and are subject to change without notice. To verify product information, please contact a Delphi representative.

# MicroHVT Female Two-Row

## 10-way Unsealed

**Shown: Index 10A**

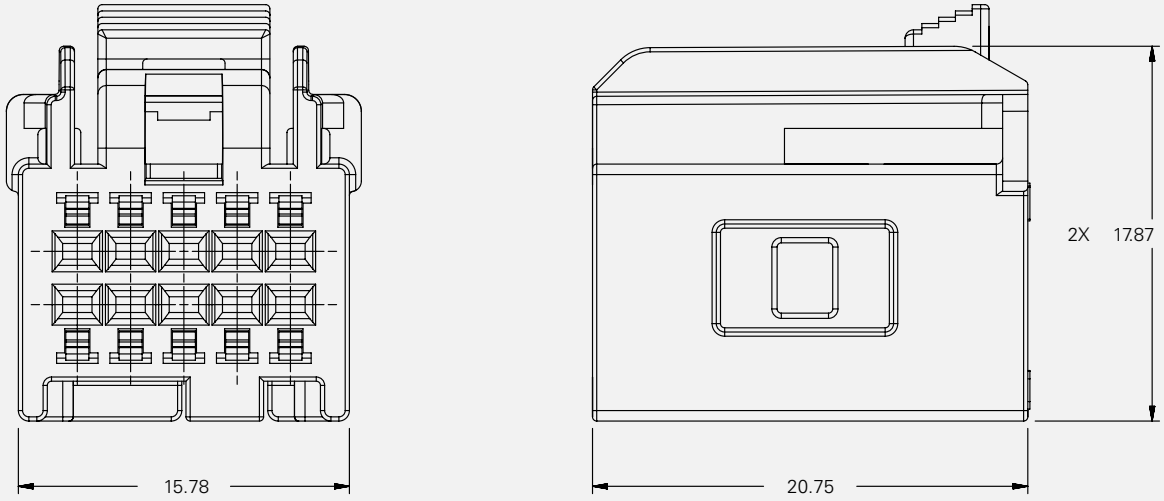


*Dimensions shown in millimeters.*

| Part Number | | Color | Index | USCAR Cross-Reference |
|---|---|---|---|---|
| Connector | Connector w/CPA | | | |
| PE102025 | PE107582 | Black | 10A | 064-U-010-2-A02 |
| PE102026 | PE107583 | Gray | 10B | 064-U-010-2-B02 |
| PE102027 | PE107584 | Brown | 10C | 064-U-010-2-C02 |
| PE102028 | PE107585 | Green | 10D | 064-U-010-2-D02 |
| PE102029 | PE107586 | Dark Blue | 10E | 064-U-010-2-E02 |
| PE102030 | PE107587 | Natural | 10F | 064-U-010-2-F02 |
| **Secondary Lock:** MicroHVT 10F - PE102094 | | | | |

*This catalog includes products which are not yet production released.*
*All catalog parts are available from low volume tooling.*
*Many catalog parts are available from high volume production tooling.*
*For parts availability, lead times and additional product information, contact Delphi Connection Systems at 248.813.2334.*

**NOTE:** Specifications in this catalog are for general reference only and are subject to change without notice. To verify product information, please contact a Delphi representative.

# MicroHVT Female Two-Row

## 12-way Unsealed

**Shown: Index 12A**

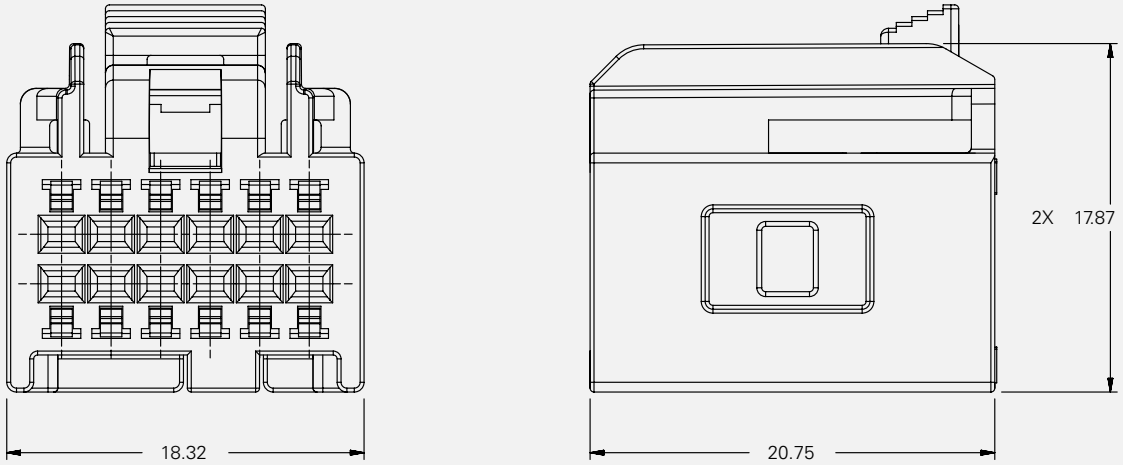


*Dimensions shown in millimeters.*

| Part Number | | Color | Index | USCAR Cross-Reference |
|---|---|---|---|---|
| Connector | Connector w/CPA | | | |
| 15477027 | 15483208 | Black | 12A | 064-U-012-2-A02 |
| PE102033 | PE107589 | Gray | 12B | 064-U-012-2-B02 |
| PE102034 | PE107590 | Brown | 12C | 064-U-012-2-C02 |
| PE102035 | PE107591 | Green | 12D | 064-U-012-2-D02 |
| PE102036 | PE107592 | Dark Blue | 12E | 064-U-012-2-E02 |
| PE102037 | PE107593 | Natural | 12F | 064-U-012-2-F02 |
| **Secondary Lock:** MicroHVT 12F - 15477037 | | | | |

*This catalog includes products which are not yet production released.*
*All catalog parts are available from low volume tooling.*
*Many catalog parts are available from high volume production tooling.*
*For parts availability, lead times and additional product information, contact Delphi Connection Systems at 248.813.2334.*

**NOTE:** Specifications in this catalog are for general reference only and are subject to change without notice. To verify product information, please contact a Delphi representative.

# MicroHVT Female Two-Row

## 16-way Unsealed

**Shown: Index 16A**

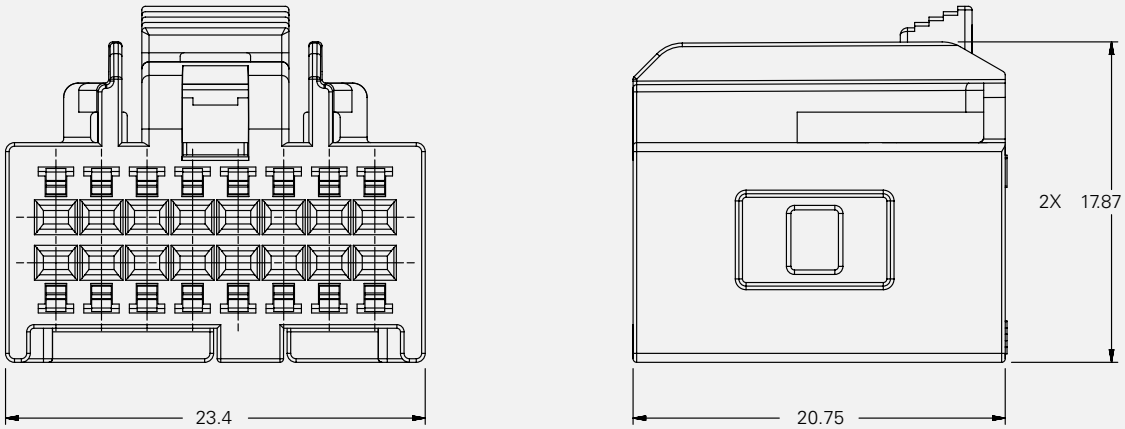


*Dimensions shown in millimeters.*

| Part Number | | Color | Index | USCAR Cross-Reference |
|---|---|---|---|---|
| Connector | Connector w/CPA | | | |
| PE107868 | PE107600 | Black | 16A | 064-U-016-2-A02 |
| PE107869 | PE107601 | Gray | 16B | 064-U-016-2-B02 |
| PE107870 | PE107602 | Brown | 16C | 064-U-016-2-C02 |
| PE107871 | PE107603 | Green | 16D | 064-U-016-2-D02 |
| PE107872 | PE107604 | Dark Blue | 16E | 064-U-016-2-E02 |
| PE107873 | PE107605 | Natural | 16F | 064-U-016-2-F02 |
| **Secondary Lock:** MicroHVT 16F - PE101003 | | | | |

*This catalog includes products which are not yet production released.*
*All catalog parts are available from low volume tooling.*
*Many catalog parts are available from high volume production tooling.*
*For parts availability, lead times and additional product information, contact Delphi Connection Systems at 248.813.2334.*

NOTE: Specifications in this catalog are for general reference only and are subject to change without notice. To verify product information, please contact a Delphi representative.

# MicroHVT Female Terminals

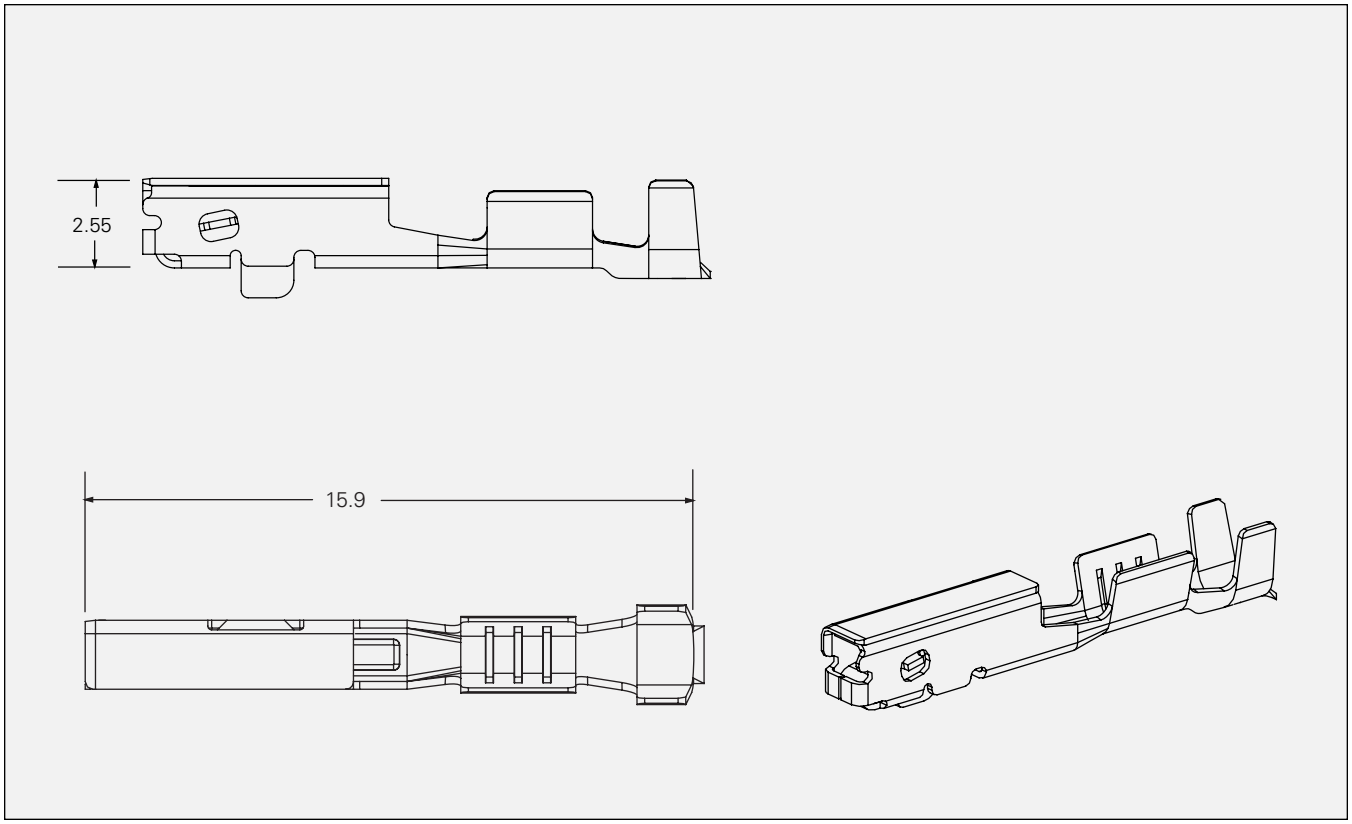


*Dimensions shown in millimeters.*

| Part Number | Typical Cable Applications | Cable OD | Base Material | Plating |
|---|---|---|---|---|
| 15445904 | 0.35 $mm^2$ - 0.50 $mm^2$ TWP (SAE J-1128) | 1.47 - 1.83 | CDA 425 Tin Brass Extra Hard | Tin |
| 15445905 | 0.75 $mm^2$ FLRY-A (DIN 72551)<br>0.80 $mm^2$ TXL Reduced Wall (SAE J-1128) | 1.70 - 1.90 | CDA 425 Tin Brass Extra Hard | Tin |

*This catalog includes products which are not yet production released.*
*All catalog parts are available from low volume tooling.*
*Many catalog parts are available from high volume production tooling.*
*For parts availability, lead times and additional product information, contact Delphi Connection Systems at 248.813.2334.*

NOTE: Specifications in this catalog are for general reference only and are subject to change without notice. To verify product information, please contact a Delphi representative.

# Micro64 Female Two-Row

## 8-way Unsealed

**Shown: Index 8A**

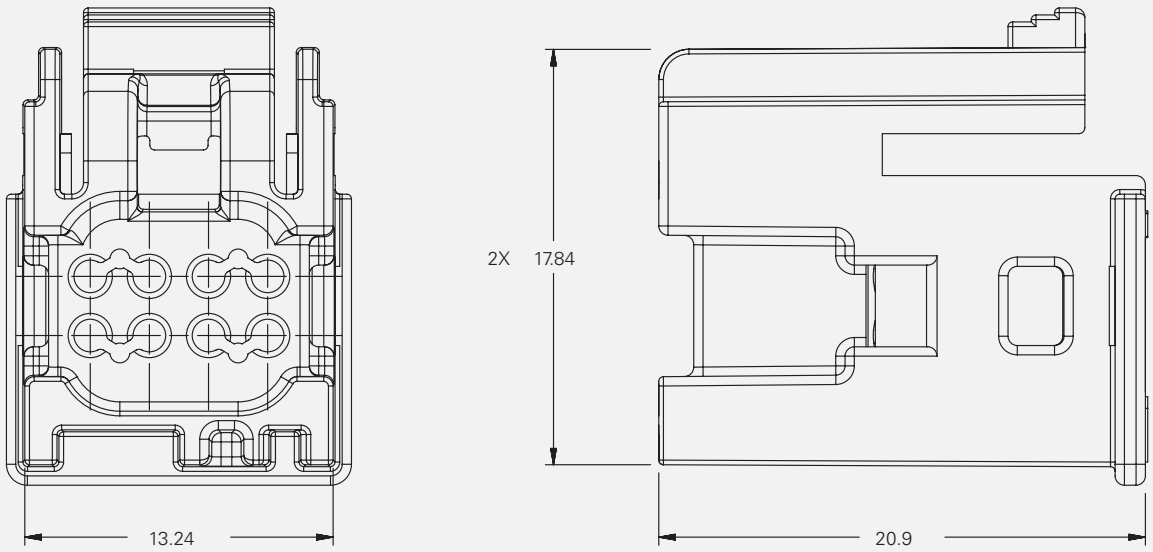


*Dimensions shown in millimeters.*

| Part Number | | Color | Index | USCAR Cross-Reference |
|---|---|---|---|---|
| Connector | Connector w/CPA | | | |
| 15480081 | 15406141 | Black | 8A | 064-U-008-2-A02 |
| 15480082 | 15406142 | Gray | 8B | 064-U-008-2-B02 |
| **Secondary Lock:** Micro64 8F - 15404970 | | | | |

*This catalog includes products which are not yet production released.*
*All catalog parts are available from low volume tooling.*
*Many catalog parts are available from high volume production tooling.*
*For parts availability, lead times and additional product information, contact Delphi Connection Systems at 248.813.2334.*

**NOTE:** Specifications in this catalog are for general reference only and are subject to change without notice. To verify product information, please contact a Delphi representative.

# Micro64 Female Two-Row

## 10-way Unsealed

**Shown: Index 10A**

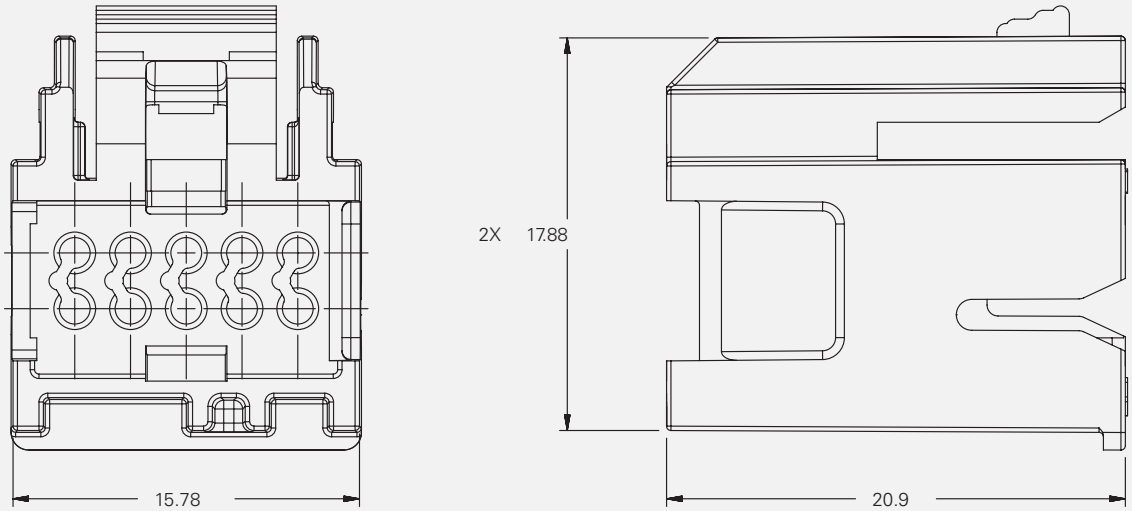


*Dimensions shown in millimeters.*

| Part Number | | Color | Index | USCAR Cross-Reference |
|---|---|---|---|---|
| Connector | Connector w/CPA | | | |
| 15479266 | 15431080 | Black | 10A | 064-U-010-2-A02 |
| 15479267 | 15431081 | Gray | 10B | 064-U-010-2-B02 |
| **Secondary Lock:** Micro64 10F - 15433830 | | | | |

*This catalog includes products which are not yet production released.*
*All catalog parts are available from low volume tooling.*
*Many catalog parts are available from high volume production tooling.*
*For parts availability, lead times and additional product information, contact Delphi Connection Systems at 248.813.2334.*

**NOTE:** Specifications in this catalog are for general reference only and are subject to change without notice. To verify product information, please contact a Delphi representative.

# Micro64 Female Two-Row

## 16-way Unsealed

**Shown: Index 16A**

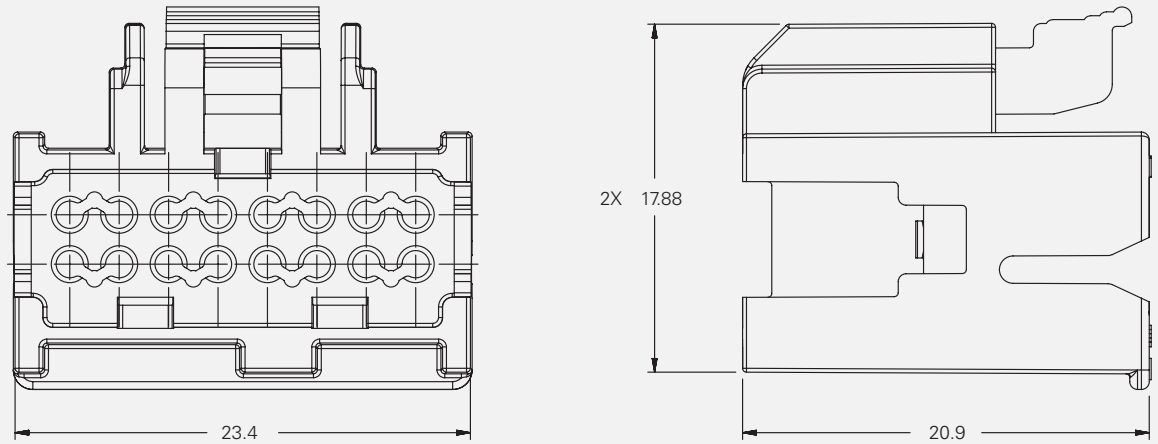


*Dimensions shown in millimeters.*

| Part Number | | Color | Index | USCAR Cross-Reference |
|---|---|---|---|---|
| Connector | Connector w/CPA | | | |
| 15416970 | 15394150 | Black | 16A | 064-U-016-2-A02 |
| 15429805 | 15394149 | Gray | 16B | 064-U-016-2-B02 |
| 15429806 | 15394151 | Brown | 16C | 064-U-016-2-C02 |
| 15429807 | 15394152 | Green | 16D | 064-U-016-2-D02 |
| 15429808 | 15394153 | Dark Blue | 16E | 064-U-016-2-E02 |
| 15429809 | 15394154 | Natural | 16F | 064-U-016-2-F02 |
| **Secondary Lock:** Micro64 16F - 15359196 | | | | |

*This catalog includes products which are not yet production released.*
*All catalog parts are available from low volume tooling.*
*Many catalog parts are available from high volume production tooling.*
*For parts availability, lead times and additional product information, contact Delphi Connection Systems at 248.813.2334.*

**NOTE:** Specifications in this catalog are for general reference only and are subject to change without notice. To verify product information, please contact a Delphi representative.

# Micro64 Female Terminals

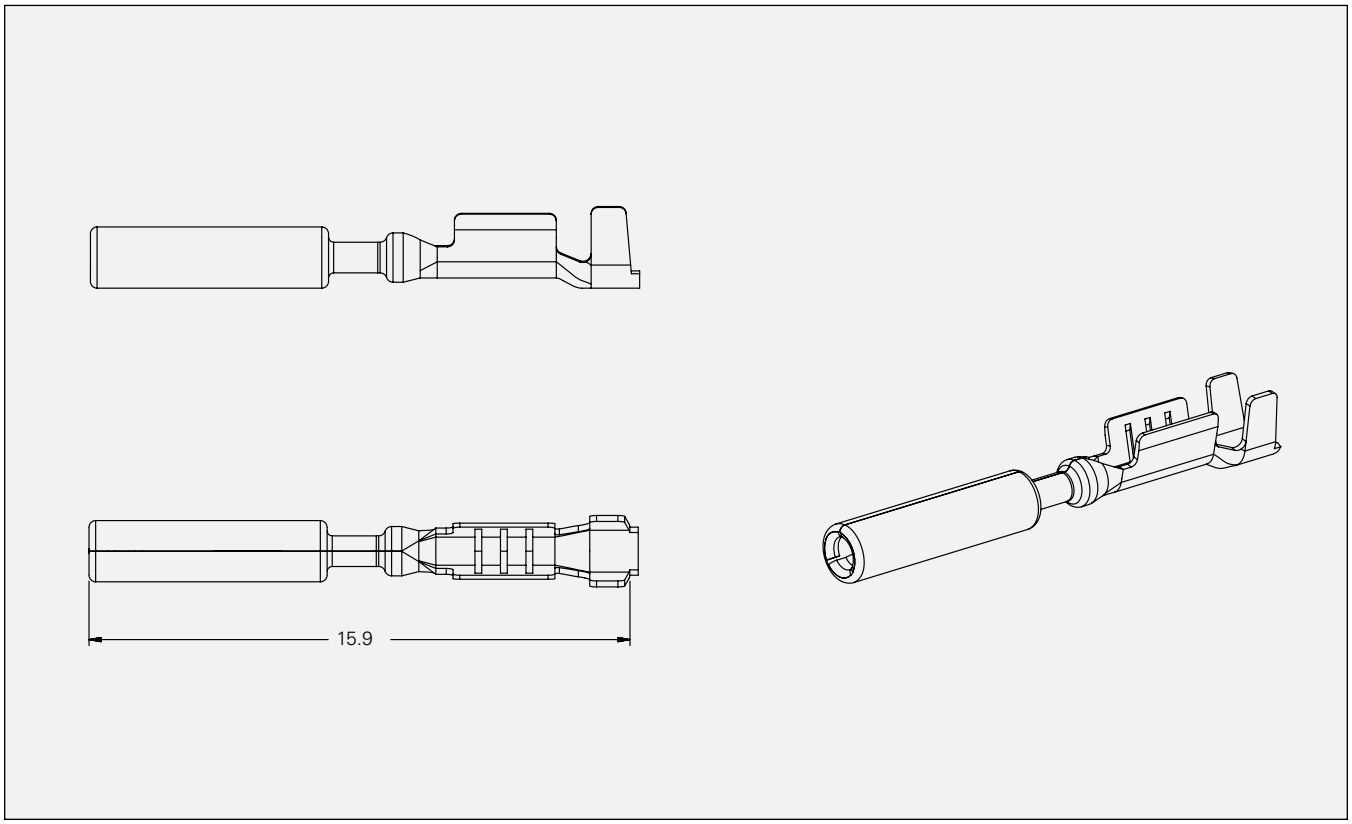


*Dimensions shown in millimeters.*

| Part Number | Typical Cable Applications | Cable OD | Base Material | Plating |
|---|---|---|---|---|
| 15394147 | 0.35 $mm^2$ TWP (SAE J-1128) | 1.47 - 1.63 | CDA 19025 copper alloy half hard | Tin |
| 15401440 | 0.50 $mm^2$ TWP (SAE J-1128)<br>0.75 $mm^2$ FLRY-A (DIN 72551)<br>0.80 $mm^2$ TXL Reduced Wall (SAE J-1128) | 1.64 - 1.90 | CDA 19025 copper alloy half hard | Tin |

*This catalog includes products which are not yet production released.*
*All catalog parts are available from low volume tooling.*
*Many catalog parts are available from high volume production tooling.*
*For parts availability, lead times and additional product information, contact Delphi Connection Systems at 248.813.2334.*

NOTE: Specifications in this catalog are for general reference only and are subject to change without notice. To verify product information, please contact a Delphi representative.

# 0.8, 1.5, 2.8, 4.8, 6.3 and Mixed

Available in both in-line and device connections for all underhood vehicle applications. By utilizing multiple contact points, the system offers exceptional electrical stability, even in high vibration applications.

Available in both device and in-line connection systems for all vehicle applications. Exceptional performance in both high and low current applications.

## Ducon Features

- High current performance
- Multiple contact points
- Small overall dimensions
- Low energy, low voltage capability
- Excellent resistance to temperature, chemicals, abrasion and vibration
- Terminal Position Assurance (TPA)
- Rugged two piece terminal construction

# 0.8

## Cross Sectional View

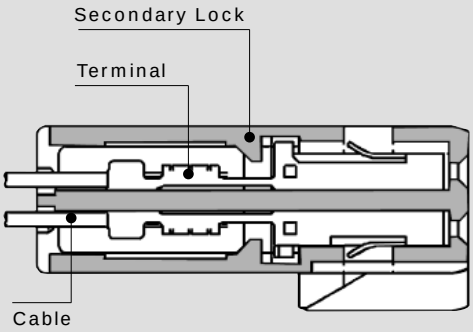


**Female Connector**

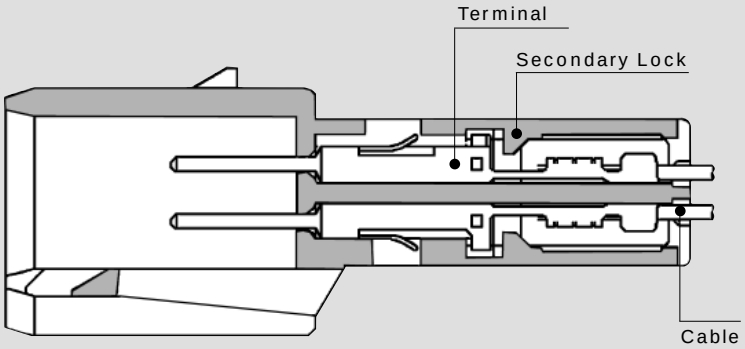


**Male Connector**

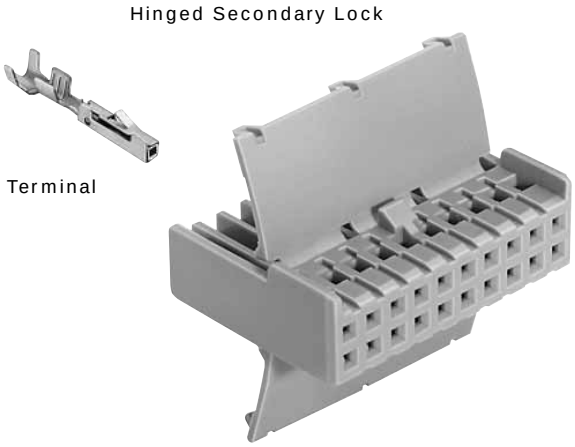


**Female Connector**

| 0.8 Female Terminal Unsealed | | | |
|---|---|---|---|
| **Part #** | **Cable Range (mm²)** | **Material** | **Plating** |
| 12131423 | 1.0-0.5 | Copper Nickel Silicon Alloy | Tin |

| 0.8 Female Connector Unsealed | | | |
|---|---|---|---|
| **# Cavities** | **Connector** | **Color** | **Material** |
| 20 | 15344037 | Gray | PA6 |

**NOTE:** Specifications in this catalog are for general reference only and are subject to change without notice. To verify product information, please contact a Delphi representative.

# 0.8

## Unsealed System Application Information

### 0.8 Series Terminals – Tin Plated

CABLE RANGE (mm²): ..... 0.5-1.0

CURRENT RANGE (AMPS): ..... 0-15

TEMP RANGE °C: ..... -40 to 135

RESISTANCE: ..... <10mΩ@20mV

VOLTAGE DROP: ..... <4.0mV/amp

CENTERLINE SPACING (mm): ..... 3.0

BLADE WIDTH (mm): ..... 0.8

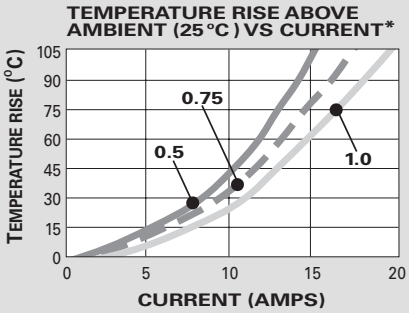


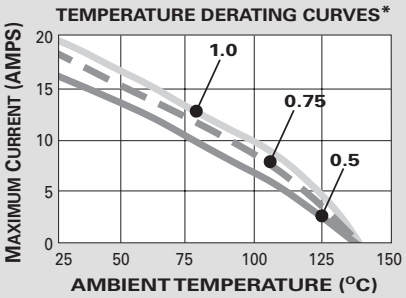


*The test data are based on single circuits in free space and were generated using a "Lumped Resistance" model. This model does not account for all of the variables that would be present in an actual application. For actual product performance, contact your regional representative.

Hinged Secondary Lock

**Male Connector**

Male Terminal

### 0.8 Male Connector Unsealed

| # Cavities | Connector | Color | Material |
|---|---|---|---|
| 20 | 15344038 | Black | PA6 |

### 0.8 Male Terminal Unsealed

| Part # | Cable Range (mm²) | Material | Plating |
|---|---|---|---|
| 15327159 | 1.0-0.50 | Copper Nickel Silicon Alloy | Tin |

**SECTION NOTES:**

- Ducon Connection Systems have been validated using DIN Cable Standards.

**NOTE:** Specifications in this catalog are for general reference only and are subject to change without notice. To verify product information, please contact a Delphi representative.

# 0.8

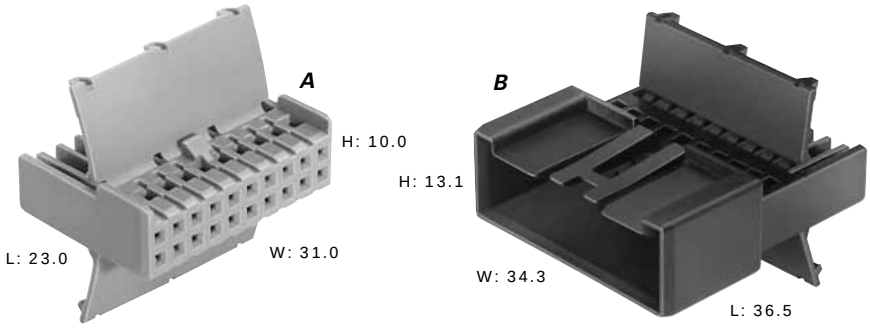


Total Mated Length: 44.5mm



**A. Part No: 15344037**

| | |
|---|---|
| Description: | Connector 20F |
| Size: | 23.0L x 10.0H x 31.0W |
| Color: | Gray |
| Material: | PA6 |
| Terminals: | See Page 5.2 |

**B. Part No: 15344038**

| | |
|---|---|
| Description: | Connector 20M |
| Size: | 36.5L x 13.1H x 34.3W |
| Color: | Black |
| Material: | PA6 |
| Terminals: | See Page 5.3 |

**NOTE:** Specifications in this catalog are for general reference only and are subject to change without notice. To verify product information, please contact a Delphi representative.

# 0.8 Device Connections

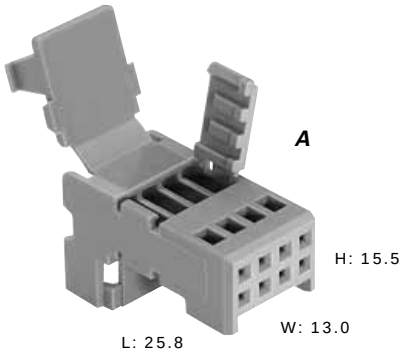


**A. Part No: 15327190**

| | |
|---|---|
| Description: | Connector 8F |
| Size: | 25.8L x 15.5H x 13.0W |
| Color: | Gray |
| Material: | PA66 |
| Terminals: | See Page 5.2 |



**NOTE:** Specifications in this catalog are for general reference only and are subject to change without notice. To verify product information, please contact a Delphi representative.

# 1.5

## Cross Sectional View

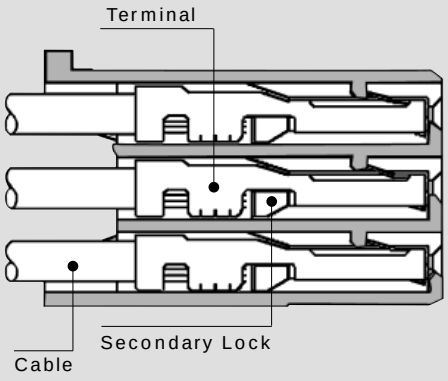


**Female Connector**

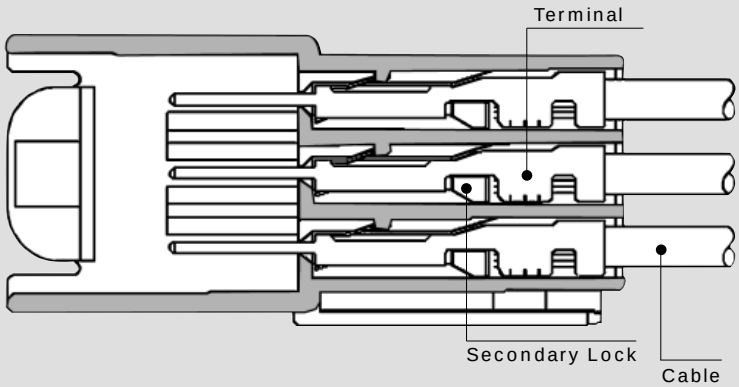


**Male Connector**

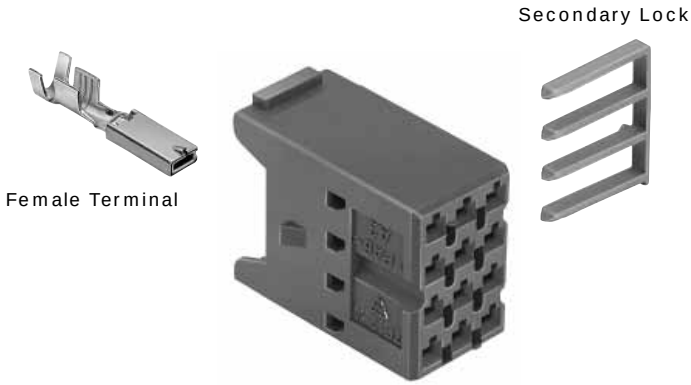


**Female Connector**

| 1.5 Female Terminals Unsealed | | | |
|---|---|---|---|
| **Part #** | **Cable Range (mm²)** | **Material** | **Plating** |
| 12147302 | 1.0-0.5 | Copper Nickel Silicon Alloy | Tin |
| 12147303 | 2.5-1.5 | Copper Nickel Silicon Alloy | Tin |

| 1.5 Female Connectors Unsealed | | | | |
|---|---|---|---|---|
| **# Cavities** | **Connector** | **Color** | **Material** | **Secondary Lock** |
| 9 | 15336766 | Blue | PA6 | 15354674 |
| 12 | 12185284 | Green | PA6 | 12198533 |
| 15 | 12185081 | Black | PA6 | 12185080 |

**NOTE:** Specifications in this catalog are for general reference only and are subject to change without notice. To verify product information, please contact a Delphi representative.

# 1.5

## Unsealed System Application Information

### 1.5 Series Terminals – Tin Plated

CABLE RANGE (mm²): ..... 0.5-2.5

CURRENT RANGE (AMPS): ..... 25

TEMP RANGE °C: ..... -40 to 135

RESISTANCE: ..... <10mΩ@20mV

VOLTAGE DROP: ..... <4.0mV/amp

CENTERLINE SPACING (mm): ..... 4.5

BLADE WIDTH (mm): ..... 1.5

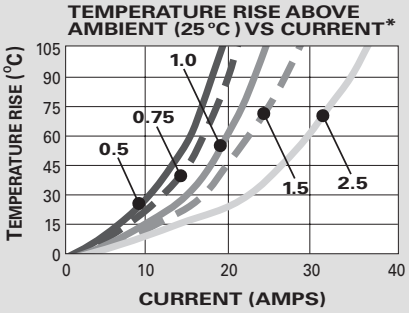


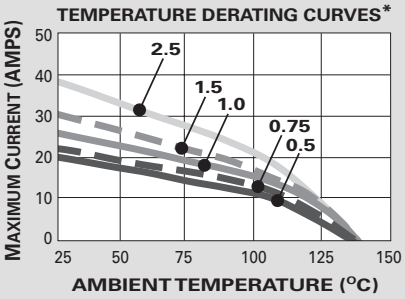


*The test data are based on single circuits in free space and were generated using a "Lumped Resistance" model. This model does not account for all of the variables that would be present in an actual application. For actual product performance, contact your regional support representative.

Secondary Lock

**Male Connector**

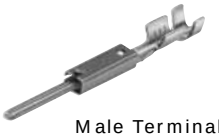

Male Terminal

### 1.5 Male Connectors Unsealed

| # Cavities | Connector | Color | Material | Secondary Lock |
|---|---|---|---|---|
| 9 | 12185085 | Blue | PA6 | 15354674 |
| 12 | 12184963 | Green | PA6 | 12198533 |
| 15 | 12184934 | Black | PA6 | 12184935 |

### 1.5 Male Terminals Unsealed

| Part # | Cable Range (mm²) | Material | Plating |
|---|---|---|---|
| 12147299 | 1.0-0.5 | Copper Nickel Silicon Alloy | Tin |
| 12147300 | 2.5-1.5 | Copper Nickel Silicon Alloy | Tin |

**SECTION NOTES:**

- Ducon Connection Systems have been validated using DIN Cable Standards.

**NOTE:** Specifications in this catalog are for general reference only and are subject to change without notice. To verify product information, please contact a Delphi representative.

# 1.5

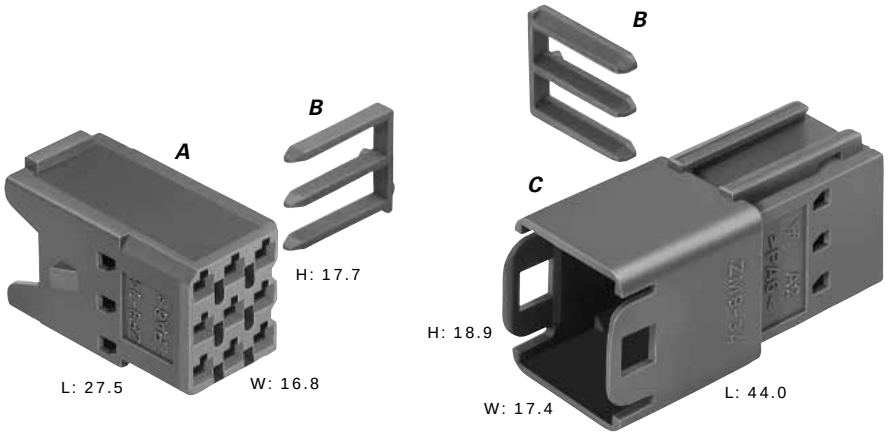


Total Mated Length: 50.5mm

## A. Part No: 15336766

| | |
|---|---|
| Description: | Connector 9F |
| Size: | 27.5L x 17.7H x 16.8W |
| Color: | Blue |
| Material: | PA6 |
| Terminals: | See Page 5.6 |

## B. Part No: 15354674

| | |
|---|---|
| Description: | Secondary Lock |
| Number Req: | 2 |
| Color: | Gray |
| Material: | PA6 15% GF |

## C. Part No: 12185085

| | |
|---|---|
| Description: | Connector 9M (Clip Slot) |
| Size: | 44.0L x 18.9H x 17.4W |
| Color: | Blue |
| Material: | PA6 |
| Terminals: | See Page 5.7 |

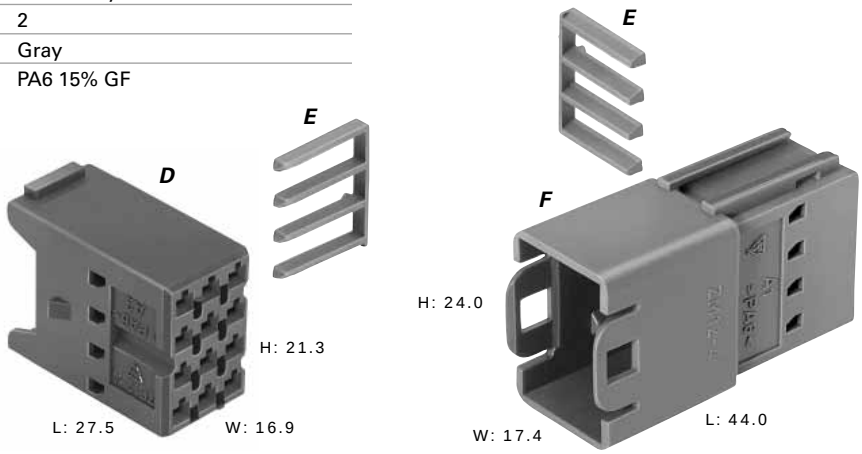


Total Mated Length: 50.5mm

## D. Part No: 12185284

| | |
|---|---|
| Description: | Connector 12F |
| Size: | 27.5L x 21.3H x 16.9W |
| Color: | Green |
| Material: | PA6 |
| Terminals: | See Page 5.6 |

## E. Part No: 12198533

| | |
|---|---|
| Description: | Secondary Lock |
| Number Req: | 2 |
| Color: | Gray |
| Material: | PA6 15% GF |

## F. Part No: 12184963

| | |
|---|---|
| Description: | Connector 12M (Clip Slot) |
| Size: | 44.0L x 24.0H x 17.4W |
| Color: | Green |
| Material: | PA6 |
| Terminals: | See Page 5.7 |

**NOTE:** Specifications in this catalog are for general reference only and are subject to change without notice. To verify product information, please contact a Delphi representative.

# 1.5

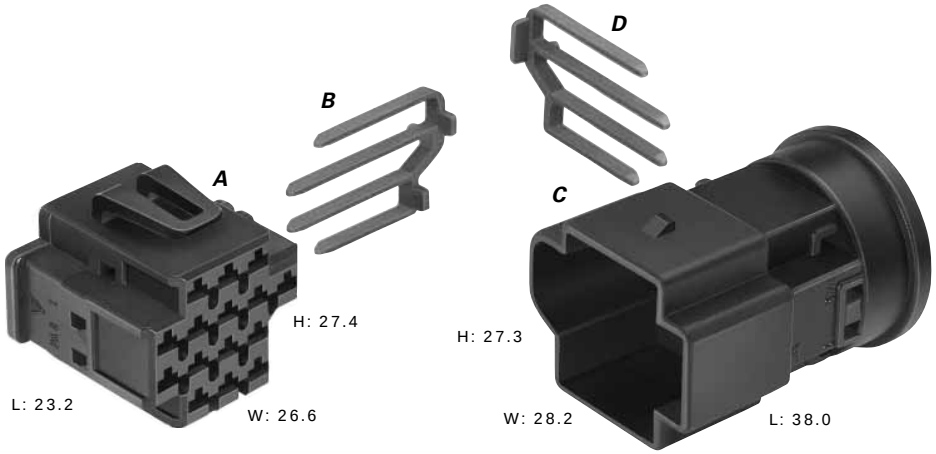


Total Mated Length: 47.0mm

### A. Part No: 12185081

| | |
|---|---|
| Description: | Connector 15F |
| Size: | 23.2L x 27.4H x 26.6W |
| Color: | Black |
| Material: | PA6 |
| Terminals: | See Page 5.6 |

### B. Part No: 12185080

| | |
|---|---|
| Description: | Secondary Lock |
| Color: | Gray |
| Material: | PA6 15% GF |

### C. Part No: 12184934

| | |
|---|---|
| Description: | Connector 15M |
| Size: | 38.0L x 27.3H x 28.2W |
| Color: | Black |
| Material: | PA6 |
| Terminals: | See Page 5.7 |

### D. Part No: 12184935

| | |
|---|---|
| Description: | Secondary Lock |
| Color: | Gray |
| Material: | PA6 15% GF |



**NOTE:** Specifications in this catalog are for general reference only and are subject to change without notice. To verify product information, please contact a Delphi representative.

# 2.8

## Cross Sectional View

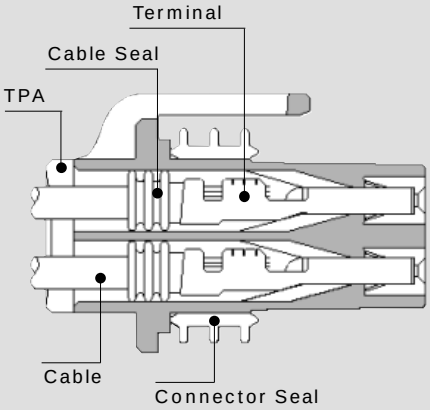


**Female Connector Assembly**

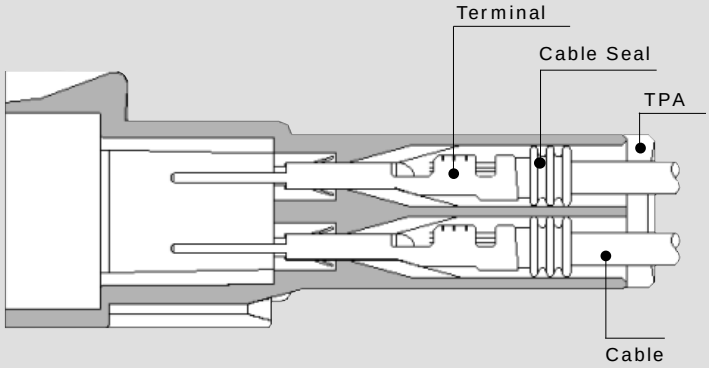


**Male Connector**

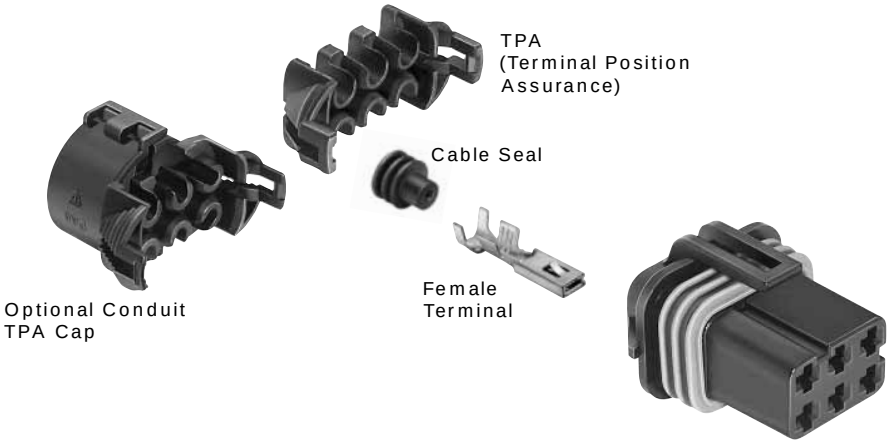

**Female Connector Assembly**

### 2.8 Female Terminals Sealed

| Part # | Cable Range (mm²) | Material | Plating |
|---|---|---|---|
| 12158098 | 1.5-0.5 | Copper Nickel Silicon Alloy | Tin |
| 12185008 | 2.5-1.5 | Copper Nickel Silicon Alloy | Tin |

### 2.8 Ducon Cable Seals

| Reel Part # | Loose Part # | Cable Dia. | Material | Color |
|---|---|---|---|---|
| 12089442 | 15324974 | 2.00-1.20 | Silicone | Blue |
| 10720769 | 15324976 | 2.40-1.60 | Silicone | White |
| 15363992 | 15324973 | 2.90-2.00 | Silicone | Dk. Red |

### 2.8 Female Connector Assembly Sealed

| # Cavities | Connector | Color | Material | TPA |
|---|---|---|---|---|
| 6 | 15344052 | Black | PA6 | 12185000 |
| Optional Conduit | TPA Cap | Black | PA6 | 10717815 |

**NOTE:** Specifications in this catalog are for general reference only and are subject to change without notice. To verify product information, please contact a Delphi representative.

# 2.8

## Sealed System Application Information

### 2.8 Series Terminals – Tin Plated

CABLE RANGE (mm²): ..... 0.5-2.5

CURRENT RANGE (AMPS): ..... 33

TEMP RANGE °C: ..... -40 to 135

RESISTANCE: ..... <10mΩ@20mV

VOLTAGE DROP: ..... <4.0mV/amp

CENTERLINE SPACING (mm): ..... 6.0

BLADE WIDTH (mm): ..... 2.8

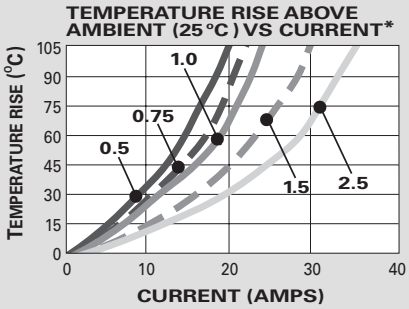


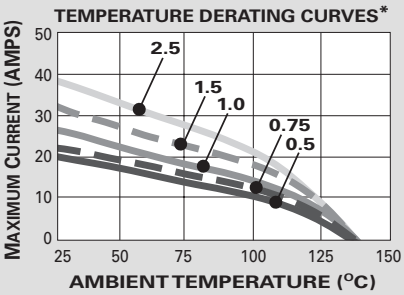


*The test data are based on single circuits in free space and were generated using a "Lumped Resistance" model. This model does not account for all of the variables that would be present in an actual application. For actual product performance, contact your regional support representative.

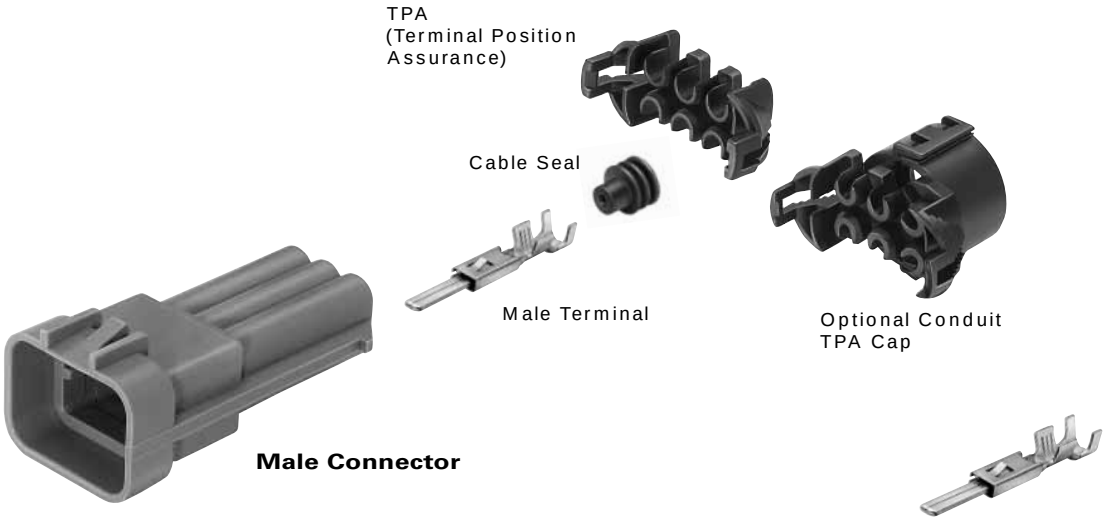


### 2.8 Male Connector Sealed

| # Cavities | Connector | Color | Material | TPA |
|---|---|---|---|---|
| 6 | 12185126 | Gray | PA6 | 12185000 |
| Optional Conduit | TPA Cap | Black | PA6 | 10717815 |

### 2.8 Male Terminals Sealed

| Part # | Cable Range (mm²) | Material | Plating |
|---|---|---|---|
| 12185129 | 1.5-0.5 | Copper Nickel Silicon Alloy | Tin |
| 12185237 | 2.5-1.5 | Copper Nickel Silicon Alloy | Tin |

### 2.8 Ducon Cavity Plugs*

| Part # | Cavity Inside Dia. | Material | Color |
|---|---|---|---|
| 15337197 | 5.2mm | Silicone | White |
| 10730124 | 5.2mm | Silicone | Green |

*Cavity plugs seal unused female and male cavities.

**SECTION NOTES:**

- Ducon Connection Systems have been validated using DIN Cable Standards.

**NOTE:** Specifications in this catalog are for general reference only and are subject to change without notice. To verify product information, please contact a Delphi representative.

# 2.8

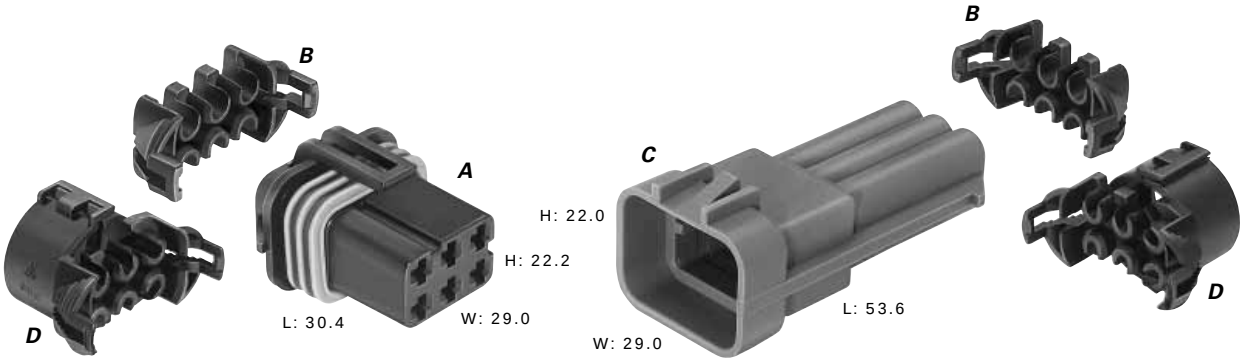


Total Mated Length: 67.0mm



### A. Part No: 15344052

| | |
|---|---|
| Description: | Connector Assembly 6F |
| Size: | 30.4L x 22.2H x 29.0W |
| Color: | Black |
| Material: | PA6 |
| Terminals: | See Page 5.10 |

### B. Part No: 12185000

| | |
|---|---|
| Description: | TPA |
| Number Req: | 2 |
| Color: | Black |
| Material: | PA6 |

### C. Part No: 12185126

| | |
|---|---|
| Description: | Connector 6M (Clip Slot) |
| Size: | 53.6L x 22.0H x 29.0W |
| Color: | Gray |
| Material: | PA6 |
| Terminals: | See Page 5.11 |

### D. Part No: 10717815 (Optional)

| | |
|---|---|
| Description: | Conduit TPA Cap |
| Number Req: | 2 |
| Color: | Black |
| Material: | PA6 |

**NOTE:** Specifications in this catalog are for general reference only and are subject to change without notice. To verify product information, please contact a Delphi representative.

# 2.8 Device Connections

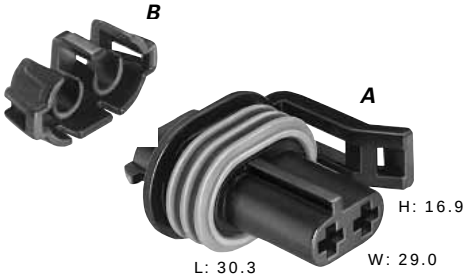


**A. Part No: 12185026* (Black)**
**15344040* (Blue)**
**15344042* (White)**

| | |
|---|---|
| Description: | Connector 2F |
| Size: | 30.3L x 16.9H x 29.0W |
| Material: | PA6 |
| Terminals: | See Page 5.10 |

*Different indexing features.

**B. Part No: 12185027**

| | |
|---|---|
| Description: | TPA |
| Color: | Black |
| Material: | PA6 |

**NOTE:** Specifications in this catalog are for general reference only and are subject to change without notice. To verify product information, please contact a Delphi representative.

# 4.8 Device Connections

## Unsealed System Application Information

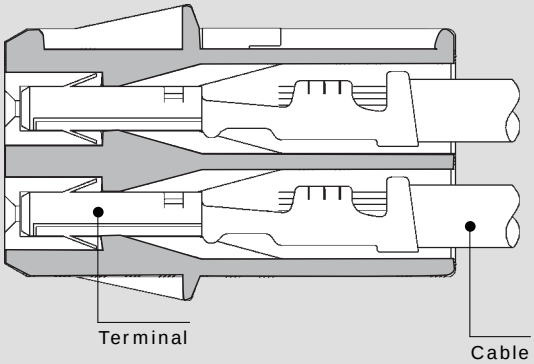


### 4.8 Series Terminals – Tin Plated

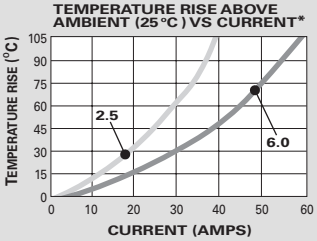


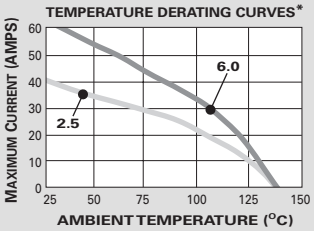


CABLE RANGE (mm²): ..... 0.5-6.0
CURRENT RANGE (AMPS): ..... 45
TEMP RANGE °C: ..... -40 to 135
RESISTANCE: ..... <10mΩ@20mV
VOLTAGE DROP: ..... <4.0mV/amp
CENTERLINE SPACING (mm): ..... 6.8
BLADE WIDTH (mm): ..... 4.8

*The test data are based on single circuits in free space and were generated using a "Lumped Resistance" model. This model does not account for all of the variables that would be present in an actual application. For actual product performance, contact your regional support representative.

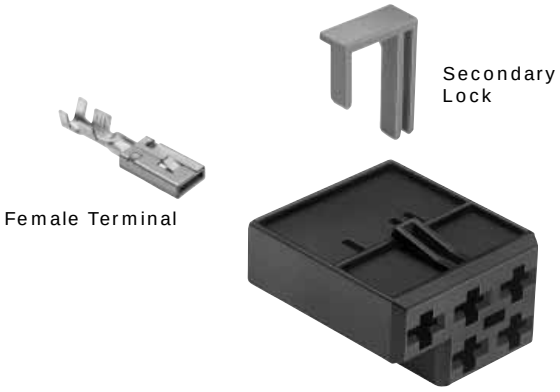


**Female Connector**

### 4.8 Female Terminals Unsealed

| Part # | Cable Range (mm²) | Material | Plating |
|---|---|---|---|
| 12185227 | 1.0-0.5 | Copper Nickel Silicon Alloy | Tin |
| 12147596 | 2.5-1.5 | Copper Nickel Silicon Alloy | Tin |
| 12147597 | 6.0-4.0 | Copper Nickel Silicon Alloy | Tin |

### 4.8 Female Connectors Unsealed

| # Cavities | Connector | Color | Material | Secondary Lock |
|---|---|---|---|---|
| 5 | 12147099 | Black | PA6 | 12147098 |
| 6 | 15344072 | Black | PA6 | 10717827 |
| 9 | 10740403 | Black | PA6 | 10740404 |
| 12 | 10717711 | Black | PA6 | 10717826 |

**NOTE:** Specifications in this catalog are for general reference only and are subject to change without notice. To verify product information, please contact a Delphi representative.

# 4.8 Device Connections

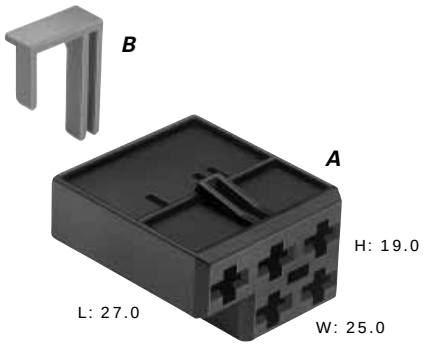


### A. Part No: 12147099

| | |
|---|---|
| Description: | Connector 5F |
| Size: | 27.0L x 19.0H x 25.0W |
| Color: | Black |
| Material: | PA6 |
| Terminals: | See Page 5.14 |
| Typical App: | Blower Switch, Heater |

### B. Part No: 12147098

| | |
|---|---|
| Description: | Secondary Lock |
| Color: | Gray |
| Material: | PA6 15% GF |

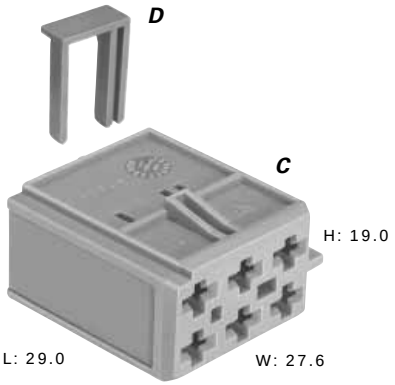


### C. Part No: 15344072

| | |
|---|---|
| Description: | Connector 6F |
| Size: | 29.0L x 19.0H x 27.6W |
| Color: | Blue |
| Material: | PA6 |
| Terminals: | See Page 5.14 |
| Typical App: | Blower Switch, Heater |

### D. Part No: 10717827

| | |
|---|---|
| Description: | Secondary Lock |
| Color: | Gray |
| Material: | PA6 15% GF |

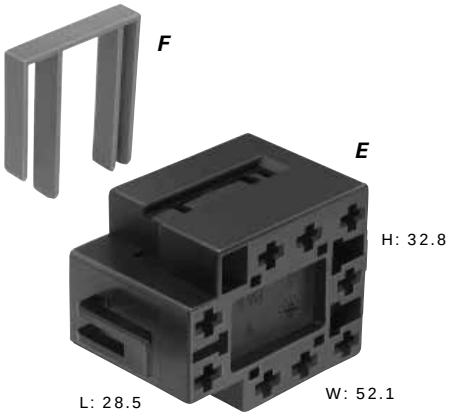


### E. Part No: 10740403

| | |
|---|---|
| Description: | Connector 9F |
| Size: | 28.5L x 32.8H x 52.1W |
| Color: | Black |
| Material: | PA6 |
| Terminals: | See Page 5.14 |
| Typical App: | Blower Switch |

### F. Part No: 10740404

| | |
|---|---|
| Description: | Secondary Lock |
| Color: | Gray |
| Material: | PA6 15% GF |

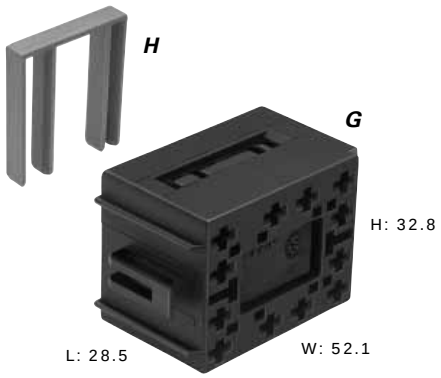


### G. Part No: 10717711

| | |
|---|---|
| Description: | Connector 12F |
| Size: | 28.5L x 32.8H x 52.1W |
| Color: | Black |
| Material: | PA6 |
| Terminals: | See Page 5.14 |
| Typical App: | Blower Switch |

### H. Part No: 10717826

| | |
|---|---|
| Description: | Secondary Lock |
| Color: | Gray |
| Material: | PA6 15% GF |

**NOTE:** Specifications in this catalog are for general reference only and are subject to change without notice. To verify product information, please contact a Delphi representative.

# 6.3

## Cross Sectional View

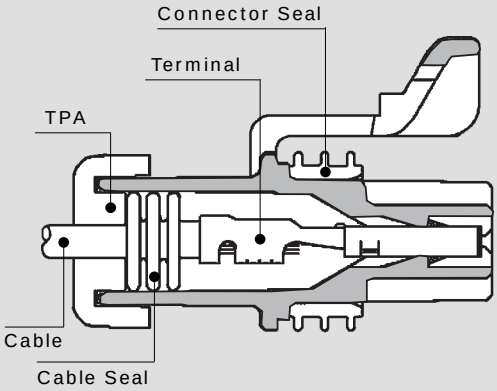


**Female Connector Assembly**

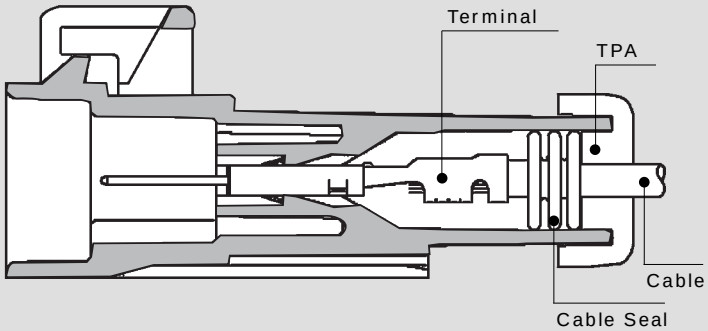


**Male Connector**

TPA
(Terminal Position
Assurance)

Female
Terminal

**Female Connector**

### 6.3 Female Terminals Sealed

| Part # | Cable Range (mm²) | Material | Plating |
|---|---|---|---|
| 12147473 | 2.5-1.5 | Copper Nickel Silicon Alloy | Tin |
| 12147474 | 6.0-4.0 | Copper Nickel Silicon Alloy | Tin |

### 6.3 Ducon Cable Seals

| Reel Part # | Loose Part # | Cable Dia. | Material | Color |
|---|---|---|---|---|
| 10730240 | 15324997 | 2.40-1.60 | Silicone | Lt. Brown |
| 12059259 | 15324995 | 2.90-2.00 | Silicone | Dk. Red |
| 10730241 | 15324994 | 3.80-2.80 | Silicone | Gray |
| 15344032 | 15324996 | 4.50-3.60 | Silicone | Blue |

### 6.3 Female Connector Assembly Sealed

| # Cavities | Connector | Color | Material | TPA |
|---|---|---|---|---|
| 2 | 12147067 | Gray | PA66 | 12147060 |

**NOTE:** Specifications in this catalog are for general reference only and are subject to change without notice. To verify product information, please contact a Delphi representative.

# 6.3

## Sealed System Application Information

CABLE RANGE (mm²): ..... 1.5-6.0

CURRENT RANGE (AMPS): ..... 55

TEMP RANGE °C: ..... -40 to 135

RESISTANCE: ..... <10mΩ@20mV

VOLTAGE DROP: ..... <4.0mV/amp

CENTERLINE SPACING (mm): ..... 10.8

BLADE WIDTH (mm): ..... 6.3

### 6.3 Series Terminals – Tin Plated

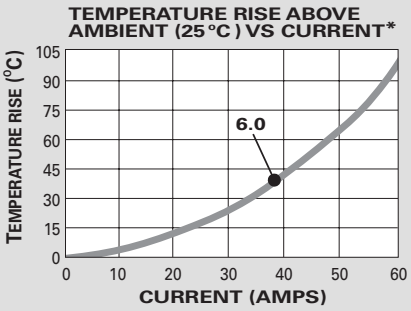


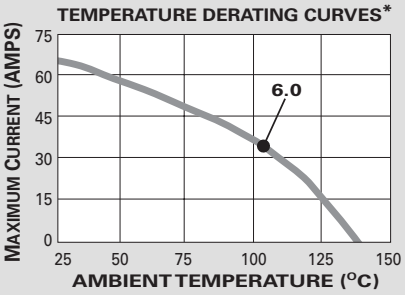


*The test data are based on single circuits in free space and were generated using a "Lumped Resistance" model. This model does not account for all of the variables that would be present in an actual application. For actual product performance, contact your regional support representative.

TPA
(Terminal Position Assurance)

Male Terminal

Male Connector

### 6.3 Male Terminals Sealed

| Part # | Cable Range (mm²) | Material | Plating |
|---|---|---|---|
| 15344632 | 2.5-1.5 | Copper Nickel Silicon Alloy | Tin |
| 15344631 | 6.0-4.0 | Copper Nickel Silicon Alloy | Tin |

### 6.3 Male Connector Sealed

| # Cavities | Connector | Color | Material | TPA |
|---|---|---|---|---|
| 2 | 15344054 | Black | PA66 | 12147060 |

### 6.3 Ducon Cavity Plug*

| Part # | Cavity Inside Dia. | Material | Color |
|---|---|---|---|
| 12059255 | 9.8mm | Silicone | Green |

*Cavity plugs seal unused female and male cavities.

**SECTION NOTES:**

- Ducon Connection Systems have been validated using DIN Cable Standards.

**NOTE:** Specifications in this catalog are for general reference only and are subject to change without notice. To verify product information, please contact a Delphi representative.

# 6.3

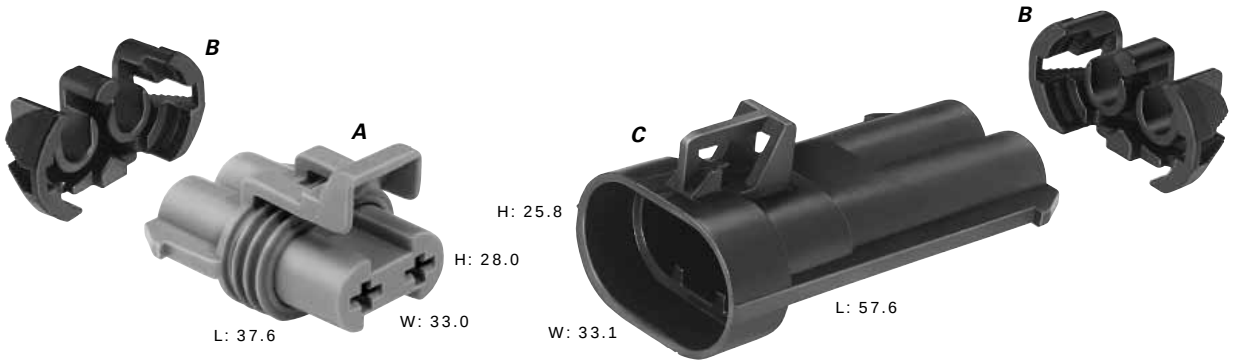


Total Mated Length: 80.0mm

### A. Part No: 12147067

| | |
|---|---|
| Description: | Connector 2F Assembly |
| Size: | 37.6L x 28.0H x 33.0W |
| Color: | Gray |
| Material: | PA66 |
| Terminals: | See Page 5.16 |

### B. Part No: 12147060

| | |
|---|---|
| Description: | TPA |
| Number Req: | 2 |
| Color: | Black |
| Material: | PA6 |

### C. Part No: 15344054

| | |
|---|---|
| Description: | Connector 2M (Clip Slot) |
| Size: | 57.6L x 25.8H x 33.1W |
| Color: | Black |
| Material: | PA66 |
| Terminals: | See Page 5.17 |

**NOTE:** Specifications in this catalog are for general reference only and are subject to change without notice. To verify product information, please contact a Delphi representative.

# Mixed

## Sealed System Application Information

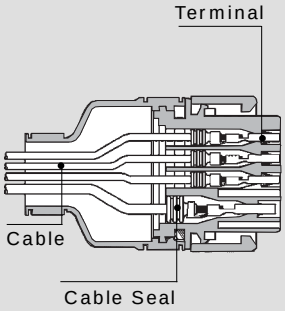


**Female Connector Assembly**

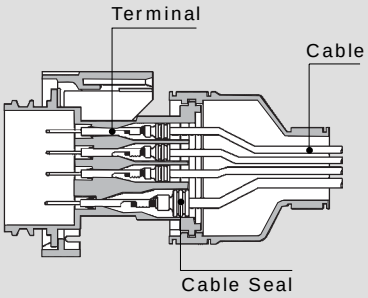


**Male Connector**

### 1.5 Series Terminals – Tin Plated

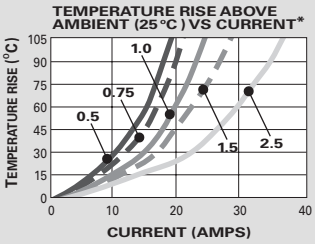


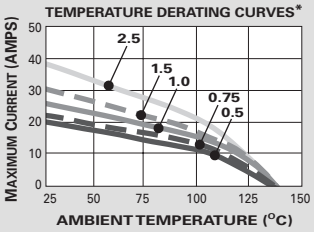


CABLE RANGE (mm²): ..... 0.5-1.0
CURRENT RANGE (AMPS): ..... 25
TEMP RANGE °C: ..... -40 to 135
RESISTANCE: ..... <10mΩ@20mV

VOLTAGE DROP: ..... <4.0mV/amp
CENTERLINE SPACING (mm): .....
..... Connector Dependent
BLADE WIDTH (mm): ..... 1.5

*The test data are based on single circuits in free space and were generated using a "Lumped Resistance" model. This model does not account for all of the variables that would be present in an actual application. For actual product performance, contact your regional support representative.

### 1.5 Female Terminals Sealed

| Part # | Cable Range (mm²) | Material | Plating |
|---|---|---|---|
| 12158097 | 1.0-0.5 | Copper Nickel Silicon Alloy | Tin |
| 10717964 | 2.5-1.5 | Copper Nickel Silicon Alloy | Tin |

### 2.8 Female Terminals Sealed

| Part # | Cable Range (mm²) | Material | Plating |
|---|---|---|---|
| 12158098 | 1.0-0.5 | Copper Nickel Silicon Alloy | Tin |
| 12185008 | 2.5-1.5 | Copper Nickel Silicon Alloy | Tin |

### 4.8 Female Terminals Sealed

| Part # | Cable Range (mm²) | Material | Plating |
|---|---|---|---|
| 12185009 | 1.0-0.5 | Copper Nickel Silicon Alloy | Tin |
| 12185550 | 2.5-1.5 | Copper Nickel Silicon Alloy | Tin |
| 10717927 | 6.0-4.0 | Copper Nickel Silicon Alloy | Tin |

### 1.5 & 2.8 Ducon Cable Seals

| Reel Part # | Loose Part # | Cable Dia. | Material | Color |
|---|---|---|---|---|
| 12089442 | 15324974 | 2.00-1.20 | Silicone | Blue |
| 10720769 | 15324976 | 2.40-1.60 | Silicone | White |
| 15363992 | 15324973 | 2.90-2.00 | Silicone | Dk. Red |

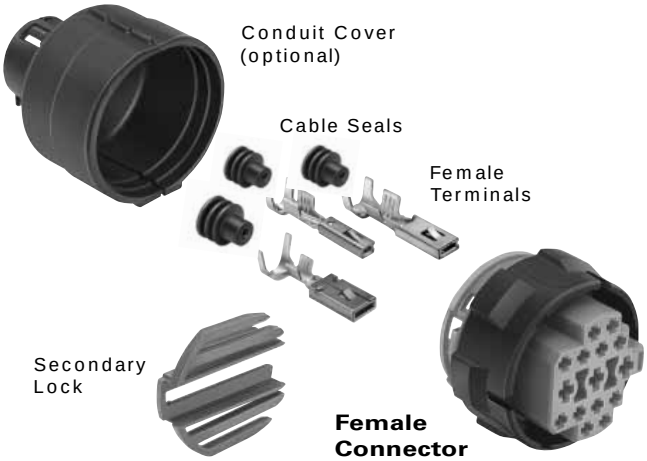


### Mixed Female Connector Assemblies Sealed

| # Cavities | Connector | Color | Material | Secondary Lock |
|---|---|---|---|---|
| 15 | 15344069 | Orange | PA66 | 12185005 |
| 20 | 12158095 | Blue | PA66 | 12158096 |

### 4.8 Ducon Cable Seals

| Reel Part # | Loose Part # | Cable Dia. | Material | Color |
|---|---|---|---|---|
| 12052931 | 15324991 | 2.00-1.20 | Silicone | Yellow |
| 12048433 | 15324988 | 2.90-2.00 | Silicone | White |
| 12052452 | 15324989 | 3.80-2.80 | Silicone | Red |
| 12052453 | 15324990 | 4.50-3.80 | Silicone | Violet |

**NOTE:** Specifications in this catalog are for general reference only and are subject to change without notice. To verify product information, please contact a Delphi representative.

# Mixed

## Sealed System Application Information

### 2.8 Series Terminals – Tin Plated

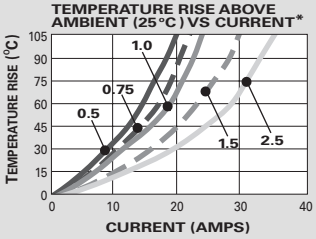


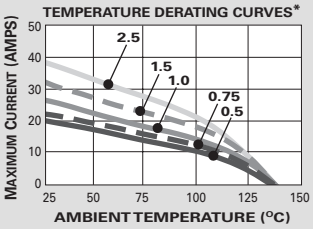


CABLE RANGE (mm²): ..... 0.5-1.0
CURRENT RANGE (AMPS): ..... 33
TEMP RANGE °C: ..... -40 to 135
RESISTANCE: ..... <10mΩ@20mV

VOLTAGE DROP: ..... <4.0mV/amp
CENTERLINE SPACING (mm): .....
..... Connector Dependent
BLADE WIDTH (mm): ..... 2.8

### 4.8 Series Terminals – Tin Plated

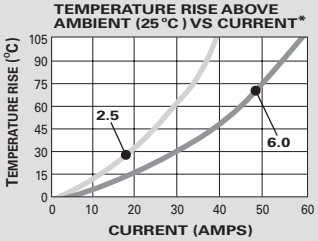


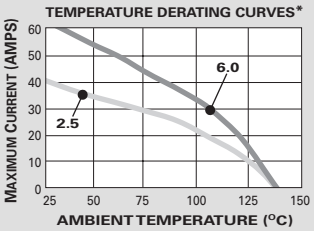


CABLE RANGE (mm²): ..... 0.5-2.5
CURRENT RANGE (AMPS): ..... 45
TEMP RANGE °C: ..... -40 to 135
RESISTANCE: ..... <10mΩ@20mV

VOLTAGE DROP: ..... <4.0mV/amp
CENTERLINE SPACING (mm): .....
..... Connector Dependent
BLADE WIDTH (mm): ..... 4.8

*The test data are based on single circuits in free space and were generated using a "Lumped Resistance" model. This model does not account for all of the variables that would be present in an actual application. For actual product performance, contact your regional support representative.

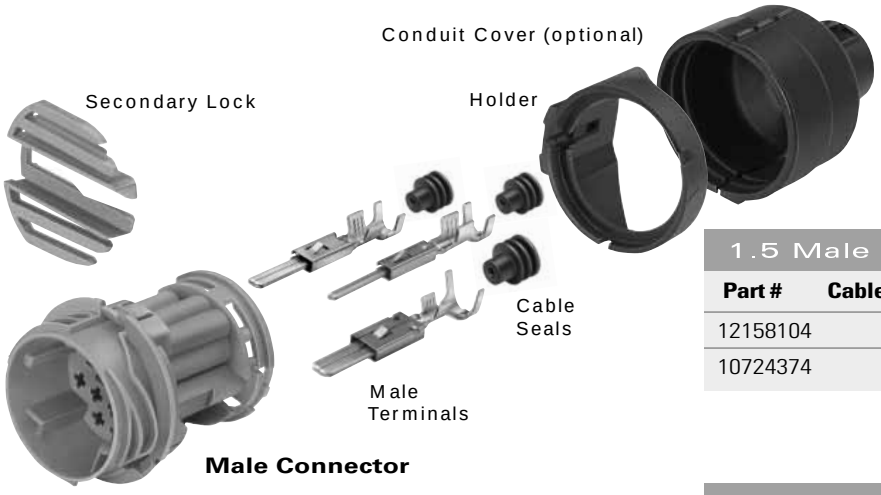

### 1.5 Male Terminals Sealed

| Part # | Cable Range (mm²) | Material | Plating |
|---|---|---|---|
| 12158104 | 1.0-0.5 | Copper Nickel Silicon Alloy | Tin |
| 10724374 | 2.5-1.5 | Copper Nickel Silicon Alloy | Tin |

### 2.8 Male Terminals Sealed

| Part # | Cable Range (mm²) | Material | Plating |
|---|---|---|---|
| 12185129 | 1.0-0.5 | Copper Nickel Silicon Alloy | Tin |
| 12185237 | 2.5-1.5 | Copper Nickel Silicon Alloy | Tin |

### 4.8 Male Terminals Sealed

| Part # | Cable Range (mm²) | Material | Plating |
|---|---|---|---|
| 12185235 | 1.0-0.5 | Copper Nickel Silicon Alloy | Tin |
| 12185236 | 2.5-1.5 | Copper Nickel Silicon Alloy | Tin |
| 10724435 | 6.0-4.0 | Copper Nickel Silicon Alloy | Tin |

### Mixed Male Connectors Sealed

| # Cavities | Connector | Color | Material | Secondary Lock |
|---|---|---|---|---|
| 15 | 10740396 | Orange | PA66 | 12185005 |
| 20 | 10717689 | Blue | PA66 | 12158096 |

1.5 & 2.8

4.8

### 1.5 & 2.8 Ducon Cavity Plugs*

| Part # | Cavity Inside Dia. | Material | Color |
|---|---|---|---|
| 15337197 | 5.2mm | Silicone | White |
| 10730124 | 5.2mm | Silicone | Green |

### 4.8 Ducon Cavity Plug*

| | | | |
|---|---|---|---|
| 12066082 | 8.5mm | Silicone | Green |

*Cavity plugs seal unused female and male cavities.

**SECTION NOTES:**

- Ducon Connection Systems have been validated using DIN Cable Standards.

**NOTE:** Specifications in this catalog are for general reference only and are subject to change without notice. To verify product information, please contact a Delphi representative.

# Mixed

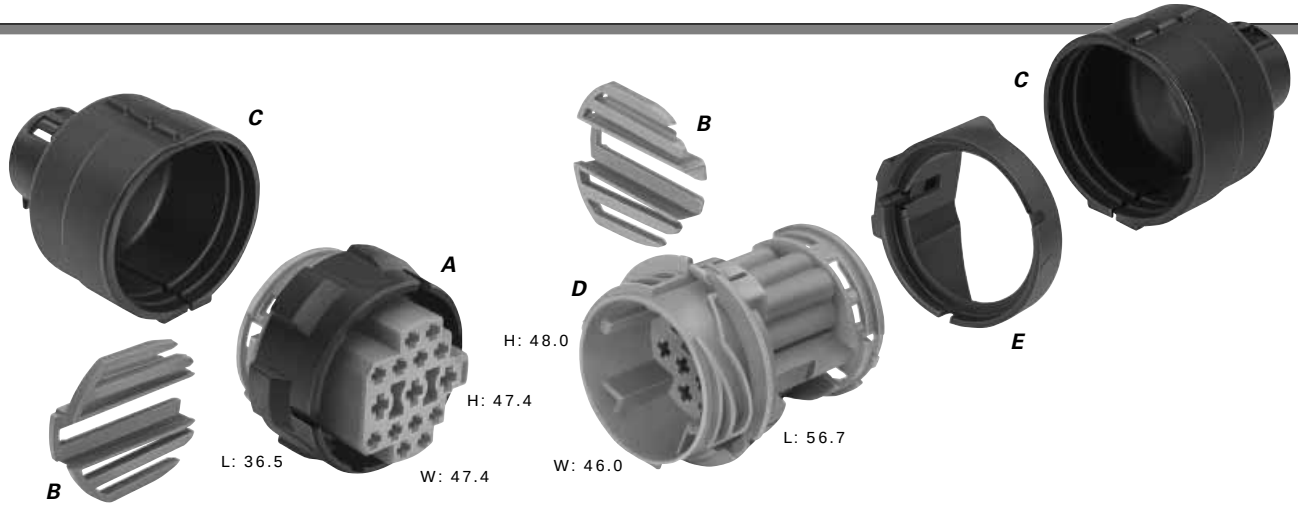


Total Mated Length: 148.0mm

**A. Part No: 15344069 (Orange)**

| | |
|---|---|
| Description: | Connector 15F |
| **Part No:** | **12185004 (Green)** |
| Description: | Connector 11F |
| **Part No:** | **15344061 (Brown)** |
| Description: | Connector 6F |
| Size: | 36.5L x 47.4H x 47.4W |
| Material: | PA66 |
| Terminals: | See Page 5.20 |
| Seals/Plugs: | See Page 5.20 |

**B. Part No: 12185005**

| | |
|---|---|
| Description: | Secondary Lock |
| Number Req: | 2 |
| Color: | Gray |
| Material: | PA6 15% GF |

**C. Part No: 12197134 (Optional)**

| | |
|---|---|
| Description: | Cover |
| Number Req: | 2 |
| Color: | Black |
| Material: | PA6 |
| Note: | Optional 90˚ cover available. |

**D. Part No: 10740396 (Orange)**

| | |
|---|---|
| Description: | Connector 15M |
| **Part No:** | **12185278 (Green)** |
| Description: | Connector 11M |
| **Part No:** | **15344060 (Brown)** |
| Description: | Connector 6M |
| Size: | 56.7L x 48.0H x 46.0W |
| Material: | PA66 |
| Terminals: | See Page 5.21 |

**E. Part No: 12185277 (Optional)**

| | |
|---|---|
| Description: | Holder |
| Color: | Black |
| Material: | PA6 15% GF |
| Note: | Other holders available. |

**KEY:**

✧ 2.8 SERIES
✻ 4.8 SERIES

Mixed connectors feature a combination of different terminal cavities, as indicated by the key.

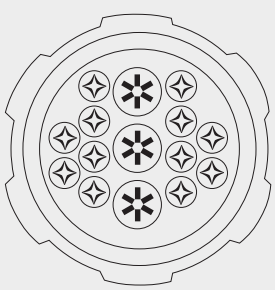

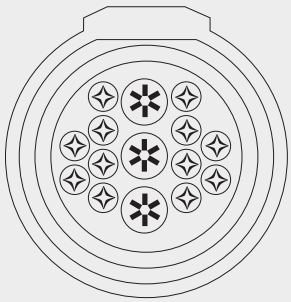

**NOTE:** Specifications in this catalog are for general reference only and are subject to change without notice. To verify product information, please contact a Delphi representative.

# Mixed

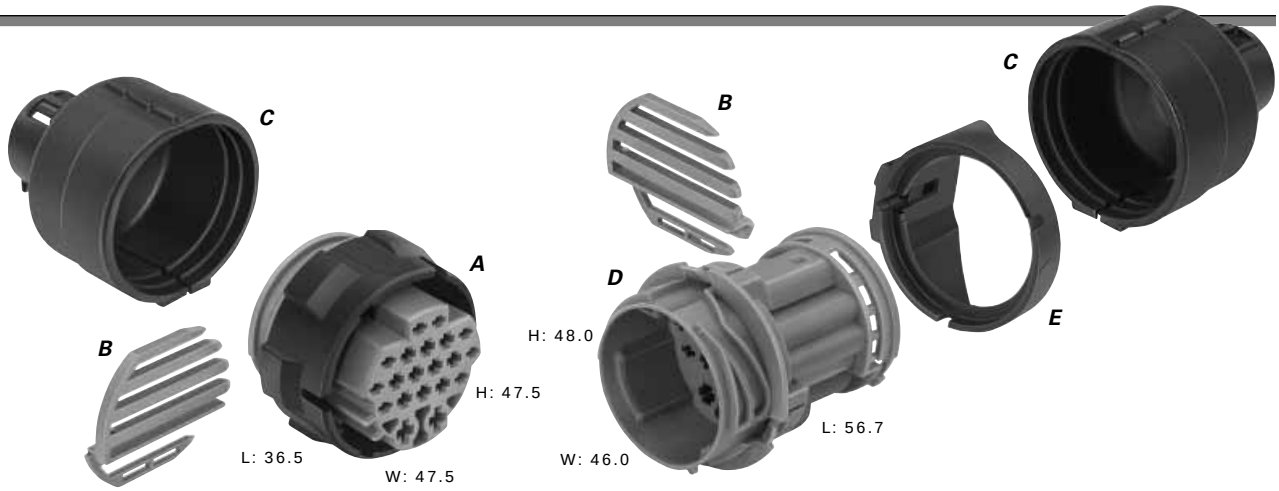


Total Mated Length: 148.0mm

### A. Part No: 12158095

| | |
|---|---|
| Description: | Connector 20F |
| Size: | 36.5L x 47.5H x 47.5W |
| Color: | Blue |
| Material: | PA66 |
| Terminals: | See Page 5.20 |
| Seals/Plugs: | See Page 5.20 |

### B. Part No: 12158096

| | |
|---|---|
| Description: | Secondary Lock |
| Number Req: | 2 |
| Color: | Gray |
| Material: | PA6 15% GF |

### C. Part No: 12197134 (Optional)

| | |
|---|---|
| Description: | Cover |
| Number Req: | 2 |
| Color: | Black |
| Material: | PA6 |
| Note: | Optional 90˚ cover available. |

### D. Part No: 10717689

| | |
|---|---|
| Description: | Connector 20M |
| Size: | 56.7L x 48.0H x 46.0W |
| Color: | Blue |
| Material: | PA66 |
| Terminals: | See Page 5.21 |
| Seals/Plugs: | See Page 5.21 |

### E. Part No: 12185277 (Optional)

| | |
|---|---|
| Description: | Holder |
| Color: | Black |
| Material: | PA6 15% GF |
| Note: | Other holders available. |

**KEY:**

✦ 1.5 SERIES
✧ 2.8 SERIES
✻ 4.8 SERIES

Mixed connectors feature a combination of different terminal cavities, as indicated by the key.

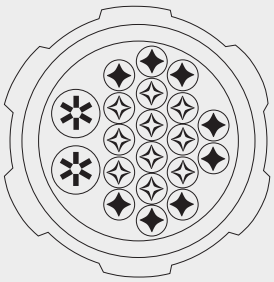

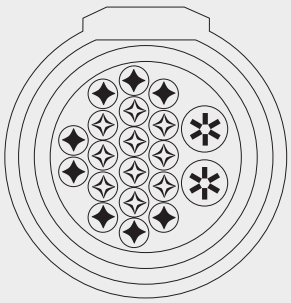

**NOTE:** Specifications in this catalog are for general reference only and are subject to change without notice. To verify product information, please contact a Delphi representative.

# Door Connections

## Sealed System Application Information

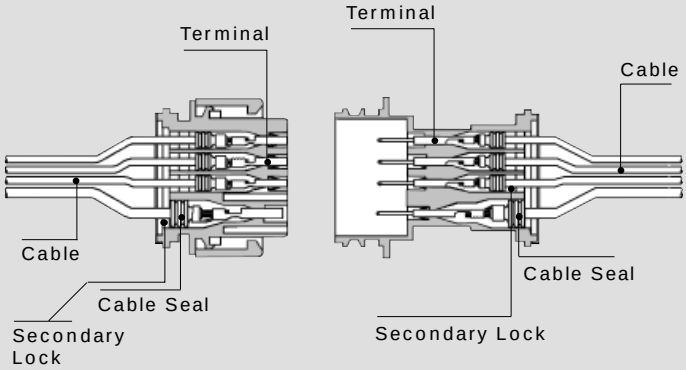


**Female Connector Assembly**

**Male Connector**

### 0.8 Series Terminals – Tin Plated

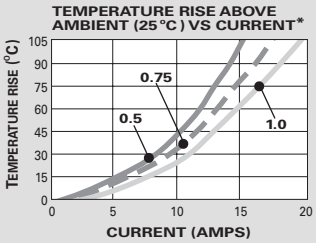


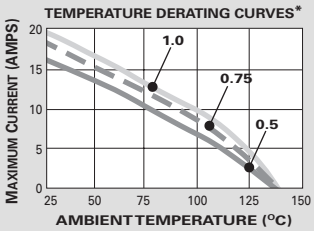


CABLE RANGE (mm²): ..... 0.5-1.0
CURRENT RANGE (AMPS): ..... 0-15
TEMP RANGE °C: ..... -40 to 135
RESISTANCE: ..... <10mΩ@20mV

VOLTAGE DROP: ..... <4.0mV/amp
CENTERLINE SPACING (mm): ..... 3.0
BLADE WIDTH (mm): ..... 0.8

*The test data are based on single circuits in free space and were generated using a "Lumped Resistance" model. This model does not account for all of the variables that would be present in an actual application. For actual product performance, contact your regional support representative.

### 0.8 Female Terminal Unsealed

| Part # | Cable Range (mm²) | Material | Plating |
|---|---|---|---|
| 12131423 | 1.0-0.5 | Copper Nickel Silicon Alloy | Tin |

### 0.8 Female Terminal Sealed

| Part # | Cable Range (mm²) | Material | Plating |
|---|---|---|---|
| 10717928 | 1.0-0.5 | Copper Nickel Silicon Alloy | Tin |

### 1.5 Female Terminals Unsealed

| Part # | Cable Range (mm²) | Material | Plating |
|---|---|---|---|
| 12147302 | 1.0-0.5 | Copper Nickel Silicon Alloy | Tin |
| 12147303 | 2.5-1.5 | Copper Nickel Silicon Alloy | Tin |

### 2.8 Female Terminals Unsealed

| Part # | Cable Range (mm²) | Material | Plating |
|---|---|---|---|
| 12147451 | 1.0-0.5 | Copper Nickel Silicon Alloy | Tin |
| 12147304 | 2.5-1.5 | Copper Nickel Silicon Alloy | Tin |

### 0.8 Ducon Cable Seal

| Part # | Cable Range (mm²) | Material | Color |
|---|---|---|---|
| 15344324 | 2.1-1.2 | Silicon | Dk. Red |

Door connectors provide environmental sealing in two ways:

1. Using sealed terminal systems.
2. Using unsealed terminal systems and protective grommets.

Contact your regional support representative for assistance in choosing the proper design for your application.

**Female Connector**

### Mixed Female Connectors Sealed

| # Cavities | Connector | Color | Material |
|---|---|---|---|
| 30 | 12147161 | Black | PA66 |
| 40 | 15327160 | Black | PA66 15% GF |

**NOTE:** Specifications in this catalog are for general reference only and are subject to change without notice. To verify product information, please contact a Delphi representative.

# Door Connections

## Sealed System Application Information

### 1.5 Series Terminals – Tin Plated

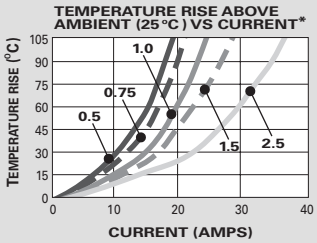


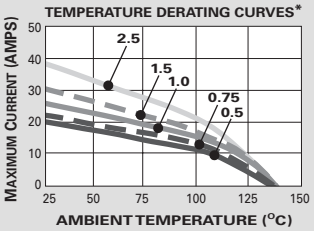


CABLE RANGE (mm²): ..... 0.5-1.0
CURRENT RANGE (AMPS): ..... 25
TEMP RANGE °C: ..... -40 to 135
RESISTANCE: ..... <10mΩ@20mV

VOLTAGE DROP: ..... <4.0mV/amp
CENTERLINE SPACING (mm): .....
..... Connector Dependent
BLADE WIDTH (mm): ..... 1.5

### 2.8 Series Terminals – Tin Plated

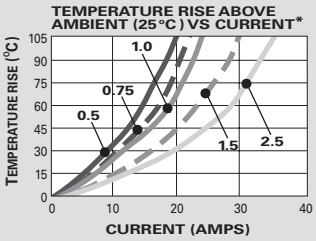


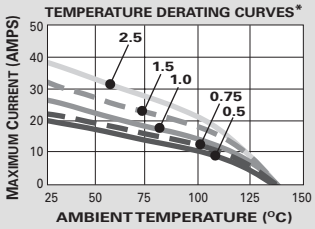


CABLE RANGE (mm²): ..... 0.5-2.5
CURRENT RANGE (AMPS): ..... 33
TEMP RANGE °C: ..... -40 to 135
RESISTANCE: ..... <10mΩ@20mV

VOLTAGE DROP: ..... <4.0mV/amp
CENTERLINE SPACING (mm): .....
..... Connector Dependent
BLADE WIDTH (mm): ..... 2.8

*The test data are based on single circuits in free space and were generated using a "Lumped Resistance" model. This model does not account for all of the variables that would be present in an actual application. For actual product performance, contact your regional support representatives.

**Male Connector**

### 0.8 Male Terminal Unsealed

| Part # | Cable Range (mm²) | Material | Plating |
|---|---|---|---|
| 15327159 | 1.0-0.5 | Copper Nickel Silicon Alloy | Tin |

### 0.8 Male Terminal Sealed

| Part # | Cable Range (mm²) | Material | Plating |
|---|---|---|---|
| 10724459 | 1.0-0.5 | Copper Nickel Silicon Alloy | Tin |

### 1.5 Male Terminals Unsealed

| Part # | Cable Range (mm²) | Material | Plating |
|---|---|---|---|
| 12147299 | 1.0-0.5 | Copper Nickel Silicon Alloy | Tin |
| 12147300 | 2.5-1.5 | Copper Nickel Silicon Alloy | Tin |

### 2.8 Male Terminals Unsealed

| Part # | Cable Range (mm²) | Material | Plating |
|---|---|---|---|
| 12147400 | 1.0-0.5 | Copper Nickel Silicon Alloy | Tin |
| 12147301 | 2.5-1.5 | Copper Nickel Silicon Alloy | Tin |

### Mixed Male Connectors Sealed

| # Cavities | Connector | Color | Material |
|---|---|---|---|
| 30 | 12147066 | Black | PA66 |
| 40 | 10730244 | Black | PA66 15% GF |

### 0.8 Ducon Cable Seal

| Part # | Cable Range (mm²) | Material | Color |
|---|---|---|---|
| 15344324 | 2.1-1.2 | Silicon | Dk. Red |

**NOTE:** Specifications in this catalog are for general reference only and are subject to change without notice. To verify product information, please contact a Delphi representative.

# Door Connections

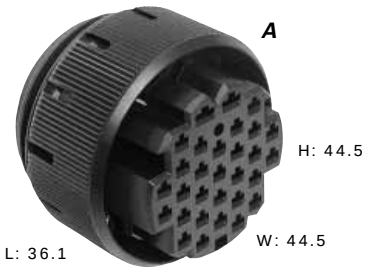


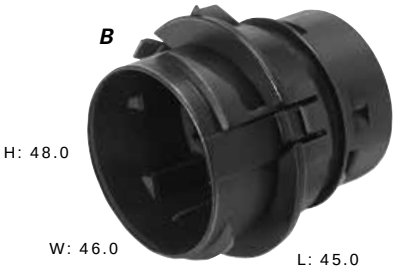


Total Mated Length: 59.6mm

### A. Part No: 12147161

| | |
|---|---|
| Description: | 1.5/2.8 Connector 30F |
| Size: | 36.1L x 44.5H x 44.5W |
| Color: | Black |
| Material: | PA66 |
| Terminals: | See Page 5.24 |

### B. Part No: 12147066

| | |
|---|---|
| Description: | 1.5/2.8 Connector 30M |
| Size: | 45.0L x 48.0H x 46.0W |
| Color: | Black |
| Material: | PA66 |
| Terminals: | See Page 5.25 |

**SECTION NOTES:**

- Contact your regional support representative.
- Door grommets available from manufacturer.

**KEY:**

✦ 1.5 SERIES
✧ 2.8 SERIES

Mixed connectors feature a combination of different terminal cavities, as indicated by the key.

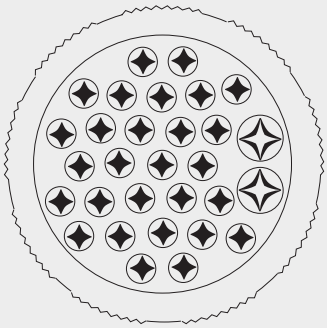

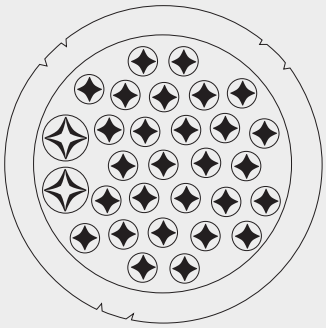

**NOTE:** Specifications in this catalog are for general reference only and are subject to change without notice. To verify product information, please contact a Delphi representative.

# Door Connections

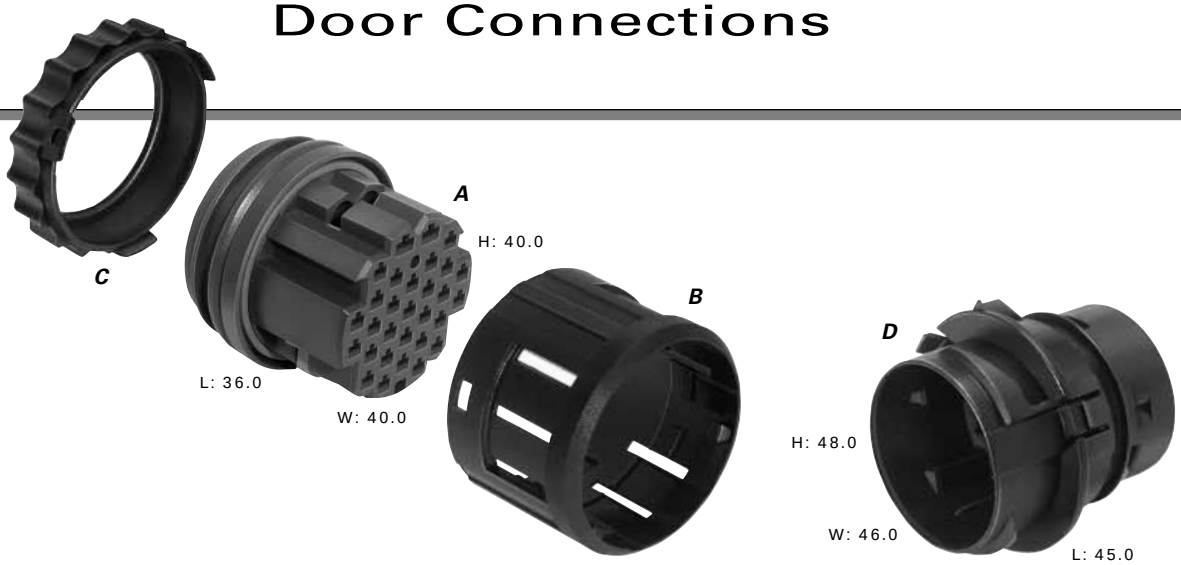


Total Mated Length: 71.6mm

### A. Part No: 12185088

| | |
|---|---|
| Description: | 1.5/2.8 Connector 30F |
| Size: | 36.0L x 40.0H x 40.0W |
| Color: | Black |
| Material: | PA66 |
| Terminals: | See Page 5.24 |

### B. Part No: 12185079

| | |
|---|---|
| Description: | Ring |
| Color: | Black |
| Material: | PA6 15% GF |

### C. Part No: 12185082

| | |
|---|---|
| Description: | Connector Ring |
| Color: | Black |
| Material: | PA6 15% GF |

### D. Part No: 12147066

| | |
|---|---|
| Description: | 1.5/2.8 Connector 30M |
| Size: | 45.0L x 48.0H x 46.0W |
| Color: | Black |
| Material: | PA66 |
| Terminals: | See Page 5.25 |

**SECTION NOTES:**

- Contact your regional support representative.
- Door grommets available from manufacturer.

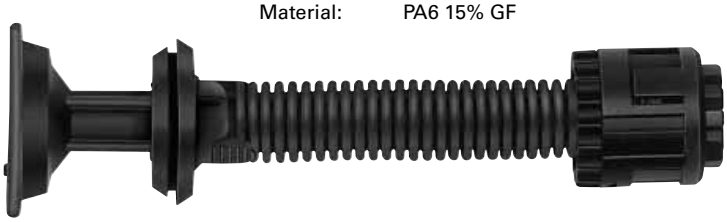

**KEY:**

✦ 1.5 SERIES
✧ 2.8 SERIES

Mixed connectors feature a combination of different terminal cavities, as indicated by the key.

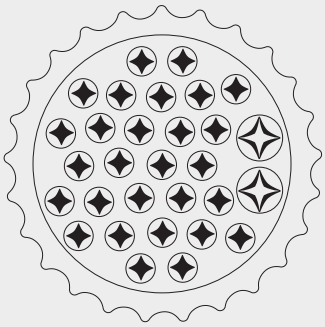

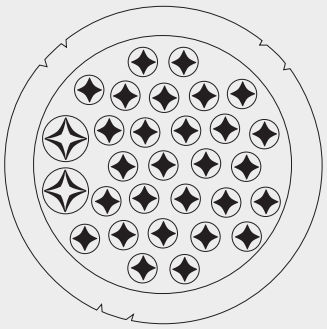

**NOTE:** Specifications in this catalog are for general reference only and are subject to change without notice. To verify product information, please contact a Delphi representative.

# Door Connections

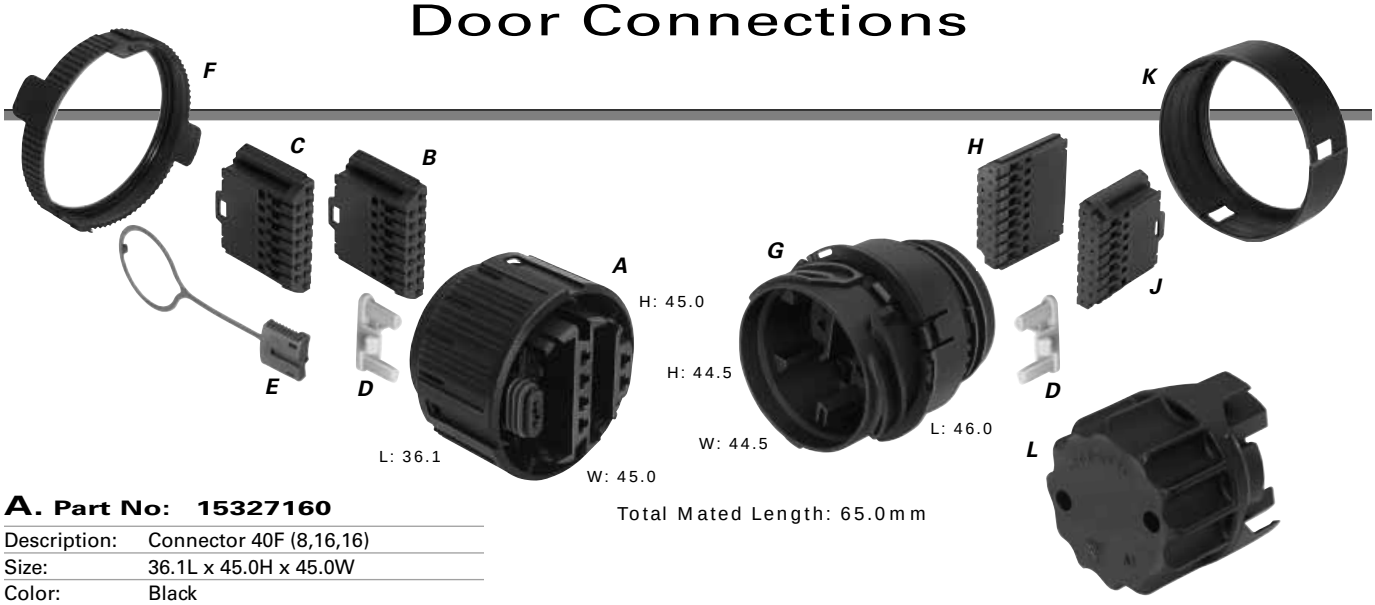


Total Mated Length: 65.0mm

### A. Part No: 15327160

| | |
|---|---|
| Description: | Connector 40F (8,16,16) |
| Size: | 36.1L x 45.0H x 45.0W |
| Color: | Black |
| Material: | PA66 15% GF |
| Terminals: | .8F, 2.8F, See Page 5.24 |
| Seals: | See Page 5.24 |

### B. Part No: 15327654

| | |
|---|---|
| Description: | Connector Module1 16F |
| Color: | Black |
| Material: | PA66 |

### C. Part No: 15327655

| | |
|---|---|
| Description: | Connector Module2 16F |
| Color: | Black |
| Material: | PA66 |

### D. Part No: 10717849

| | |
|---|---|
| Description: | TPA |
| Number Req: | 2 |
| Color: | Yellow |
| Material: | PA66 |

### E. Part No: 10717837

| | |
|---|---|
| Description: | CPA |
| Color: | Red |
| Material: | PA66 |

### F. Part No: 15327164

| | |
|---|---|
| Description: | Connector Ring |
| Color: | Black |
| Material: | PA66 15% GF |

### G. Part No: 10730244

| | |
|---|---|
| Description: | Connector 40M (8,16,16) |
| Size: | 46.0L x 44.5H x 44.5W |
| Color: | Black |
| Material: | PA66 15% GF |
| Terminals: | .8M, 2.8M, See Page 5.25 |
| Seals: | See Page 5.25 |

### H. Part No: 15327154

| | |
|---|---|
| Description: | Connector Module1 16M |
| Color: | Black |
| Material: | PA66 |

### J. Part No: 15327155

| | |
|---|---|
| Description: | Connector Module2 16M |
| Color: | Black |
| Material: | PA66 |

### K. Part No: 15327153

| | |
|---|---|
| Description: | Cover |
| Color: | Black |
| Material: | PA66 15% GF |

### L. Part No: 10728148

| | |
|---|---|
| Description: | TMS Cover |
| Color: | Black |
| Material: | PA66 15% GF |

**KEY:** ❍ 0.8 SERIES (Sealed)
✱ 0.8 SERIES (Unsealed)
✧ 2.8 SERIES

Mixed connectors feature a combination of different terminal cavities, as indicated by the key.

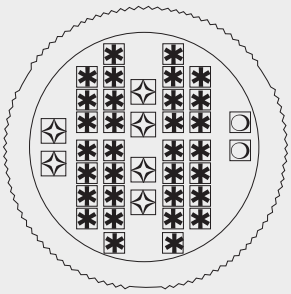

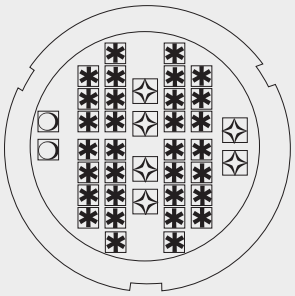

**NOTE:** Specifications in this catalog are for general reference only and are subject to change without notice. To verify product information, please contact a Delphi representative.

# Lamp Sockets, Splice Savers, Weather-Pack, VF & DS Connections

## Lamp Socket Features

- Advanced bulb to terminal interface technology
- Accommodates a wide variety of bulbs—B1, C2 bayonet, W2, W3 wedge, H7 with GT280 interface
- Available sealed or unsealed systems
- Multiple focal lengths
- Right angle or axial mounting features with easy assembly and release provisions

## VF Series Features

- Accommodates a wide variety of devices
- Small overall dimensions
- Terminal Position Assurance (TPA)
- Connector Position Assurance (CPA)

## DS Series Features

- Fuel injector applications
- High sealing protection
- Reliable electrical interface
- Secure locking mechanism

## Weather-Pack Features

- Connector Position Assurance (CPA)
- Terminal Position Assurance (TPA)
- 20 Amps continuous maximum current rating
- Sealed system
- Pin and Sleeve configuration
- Dual locking tabs on terminals
- Low energy, low voltage capability
- -40˚C to 125˚C temperature range

## Splice Saver Features

- Eliminates the need for solder
- Flexible configuration
- Uses 280 Metri-Pack or 150 GT terminals
- Uses ISO or SAE compatible terminals
- Low profile connector with cap lock
- Available in sealed/unsealed and grounded/non-grounded versions

# Lamp Sockets

Lamp Sockets are a comprehensive and diverse product line featuring sophisticated connection systems technology. Available connection systems accommodate virtually every size and type of light bulb, as well as all varieties of bulb mounting features.

## Lamp Socket Application Guidelines

| Primary Use | Application | Socket Style | Bulb Base Type | Bulb Size | Typical Lamp Number | Part Number(s) | Page Number | Description |
|---|---|---|---|---|---|---|---|---|
| Stop, Turn, Backup and Cornering Lights | Sealed | Right Angle | W-3 Wedge | S-8 | 3156 | 12160393<br>15354859* | 6.4 | Single Filament |
| Stop/Tail, Park/Turn, Backup Lights and Cornering Lights | Sealed | Right Angle | W-3 Wedge | S-8 | 3057 | 12160394, 12160395<br>15354864*, 15354865* | 6.4 | Dual Filament |
| Stop/Tail, Park/Turn, Backup Lights and Cornering Lights | Sealed | Axial | W-3 Wedge | S-8 | 3057 | 12191243, 15435155 | 6.5 | Dual Filament |
| Glove Box, Ash Tray Instrument Illumination and Courtesy Lights | Unsealed | Axial | W-2 Wedge | T-3 1/4 | 194 | 12162223, 12059952 | 6.6 | Single Filament |
| Side Marker Lamps, Backup and Center High Mounted Stop Lights | Sealed<br>Sealed | Axial<br>Axial | W-2 Wedge<br>W-2 Wedge | T-3 1/4<br>T5 | 168<br>912 | 15317651, 15324946<br>15324946 | 6.7 | Single Filament<br>Single Filament |
| Side Marker Lamps, Backup and Center High Mounted Stop Lights | Sealed | Right Angle | W-2 Wedge | T-3 1/4 | 168 | 12146418 | 6.7 | Single Filament |
| Stop, Turn, Backup and Cornering Lights | Sealed | Right Angle | B-1 Bayonet | S-8 | 1156 | 12160386 | 6.8 | Single Filament |
| Stop/Tail, Park/Turn, Backup Lights and Cornering Lights | Sealed | Right Angle | C-2 Bayonet | S-8 | 2057 | 12160390, 12160392 | 6.8 | Dual Filament |

* High temperature equivalent systems for continuously powered major filament applications.

## Lamp Socket Bases

| Part # | Application | Description | Color | Material | TPA | Insert | Seal |
|---|---|---|---|---|---|---|---|
| 12160393 | Sealed | W-3 Right Angle Wedge Base | Lt. Gray | PA66 HS IM | – | 12177161 | 12129909* |
| 12160394 | Sealed | W-3 Right Angle Wedge Base | Cream | PA66 HS IM | – | 12177163 | 12129909* |
| 12160395 | Sealed | W-3 Right Angle Wedge Base | Md. Gray | PA66 HS IM | – | 12177163 | 12129909* |
| 12191243 | Sealed | W-3 Axial Wedge Base | Dk. Gray | PA66 HS IM 14% GF | 15305473 | – | 12129909* |
| 15435155 | Sealed | W-3 Axial Wedge Base | Gray | PA66 HS IM 14% GF | 15305473 | – | 12129909* |
| 12162223 | Unsealed | W-2 Axial Wedge Base | Clear | PC | 12052490 | – | – |
| 12059952 | Unsealed | W-2 Axial Wedge Base | Black | PA66 HS IM | 15324722 | – | – |
| 15324946 | Sealed | W-2 Axial Wedge Base | Dk. Gray | PA66 HS IM 14% GF | 12110054 | – | Part of 15324946 Asm |
| 15317651 | Sealed | W-2 Axial Wedge Base | Lt. Gray | PA66 HS 33% GF | 12191522 | – | 15317652 |
| 12146418 | Sealed | W-2 Right Angle Wedge Base | Lt. Gray | PA66 HS IM | – | 15324428 | 12146398 |
| 12160386 | Sealed | B-1 Right Angle Bayonet Base | Lt. Gray | PA66 HS IM | 12129057 | – | 12129909* |
| 12160390 | Sealed | C-2 Right Angle Bayonet Base | Cream | PA66 HS IM | 12129051 | – | 12129909* |
| 12160392 | Sealed | C-2 Right Angle Bayonet Base | Md. Gray | PA66 HS IM | 12129051 | – | 12129909* |

* When an unsealed application is required, use gasket 12020720 in place of seal 12129909.

**NOTE:** Specifications in this catalog are for general reference only and are subject to change without notice. To verify product information, please contact a Delphi representative.

# Lamp Sockets

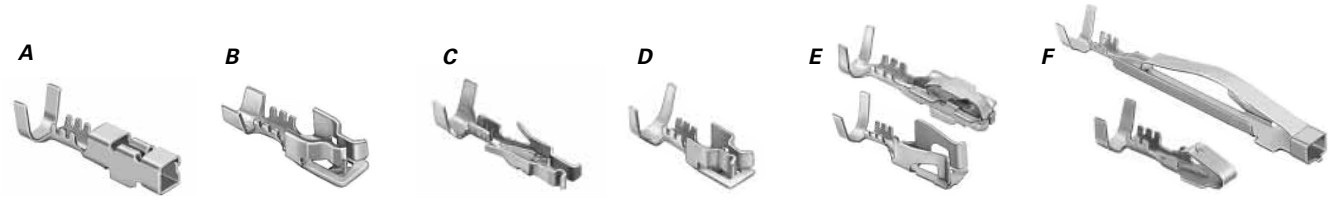


## Lamp Socket Terminals

| Series | Type | Application | Cable Seal Series | Terminal Part # | Cable Range | Material | Plating |
|---|---|---|---|---|---|---|---|
| **A** | | | | | | | |
| W-2, W-3 Right Angle | – | Sealed | 280 | 12066639 | 2.0-1.0 | Tin Brass | Tin |
| W-2, W-3 Right Angle | – | Sealed | 280 | 12066638 | 0.80-0.50 | Tin Brass | Tin |
| W-2, W-3 Right Angle | – | Sealed | 280 | 12186320 | 0.50-0.35 | Tin Brass | Tin |
| **B** | | | | | | | |
| W-2 Axial | – | Unsealed | – | 12089139 | 0.80-0.50 | Brass | Copper/Tin |
| W-2 Axial | – | Unsealed | – | 12089137 | 3.0 | Brass | Copper/Tin |
| **C** | | | | | | | |
| W-2 Axial | – | Sealed | 280 | 12176852 | 1.0-0.80 | Brass | Tin |
| W-2 Axial | – | Sealed | 280 | 12176853 | 0.50-0.35 | Brass | Tin |
| **D** | | | | | | | |
| W-2 Axial | – | Sealed | 480 | 12124471 | 1.0-0.80 | Brass | Copper/Tin |
| W-2 Axial | – | Sealed | 480 | 12124598 | 0.50-0.35 | Brass | Copper/Tin |
| **E** | | | | | | | |
| W-3 Axial | Contact | Sealed | 280 | 12092058 | 0.80-0.50 | Tin Brass | Tin |
| W-3 Axial | Contact | Sealed | 280 | 12088187 | 0.50-0.35 | Tin Brass | Tin |
| W-3 Axial | Ground | Sealed | 630 | 12092030 | 0.80-0.50 | Tin Brass | Tin |
| **F** | | | | | | | |
| B-1, C-2 | Contact | Sealed | 280 | 12129052 | 1.0-0.80 | Stainless Steel | Tin |
| B-1, C-2 | Contact | Sealed | 280 | 15304622 | 0.50-0.35 | Stainless Steel | Tin |
| B-1, C-2 | Ground | Sealed | 280 | 12129053 | 1.0-0.80 | Tin Brass | Tin |
| B-1, C-2 | Ground | Sealed | 280 | 15304621 | 0.50-0.35 | Tin Brass | Tin |

## Metri-Pack Cable Seals

| Series | Reel Part # | Loose Part # | Cable Diameter | Material | Color |
|---|---|---|---|---|---|
| 280 | 12015284 | 15324982 | 2.85-2.03 | Silicone | Green |
| 280 | 12034365 | 15324983 | 1.70-1.29 | Silicone | Dk. Red |
| 280 | 12041352 | 15324984 | 2.42-2.03 | Silicone | Tan |
| 280 | 12089444 | 15324985 | 2.15-1.60 | Silicone | Purple |
| 480 | 12048433 | 15324988 | 2.85-2.01 | Silicone | White |
| 480 | 12052931 | 15324991 | 2.15-1.60 | Silicone | Yellow |
| 630 | 12077760 | 15324997 | 2.40-1.65 | Silicone | Tan |

**NOTE:** Specifications in this catalog are for general reference only and are subject to change without notice. To verify product information, please contact a Delphi representative.

# Lamp Sockets

### A. Part No: 12160393 (Lt. Gray)
### 15326290 (Cream)
### 15326291* (Cream)

| | |
|---|---|
| Description: | W-3 Right Angle Wedge Base |
| Size: | 26.7 Hole Dia. x 31.9L x 51.7H x 40.0W |
| Material: | PA66 HS IM |
| Terminals: | See A, Page 6.3 |
| Seals: | 280 Metri-Pack Cable Seals |
| Typical Lamp: | #3156 |
| *Note: | Focal Length: 29.14mm. |

### B. Part No: 12129909**

| | |
|---|---|
| Description: | Seal |
| Color: | Black |
| Material: | EPDM |

### C. Part No: 12177161

| | |
|---|---|
| Description: | Insert with Terminals |
| Color: | Lt. Gray |
| Material: | PA66 HS IM |

### D. Part No: 12160394

| | |
|---|---|
| Description: | W-3 Right Angle Wedge Base |
| Size: | 26.7 Hole Dia. x 31.9L x 51.7H x 40.0W |
| Color: | Cream |
| Material: | PA66 HS IM |
| Terminals: | See A, Page 6.3 |
| Seals: | 280 Metri-Pack Cable Seals |
| Typical Lamp: | #3057 |

### E. Part No: 12129909**

| | |
|---|---|
| Description: | Seal |
| Color: | Black |
| Material: | EPDM |

### F. Part No: 12177163

| | |
|---|---|
| Description: | Insert with Terminals |
| Color: | Beige |
| Material: | PA66 HS IM |

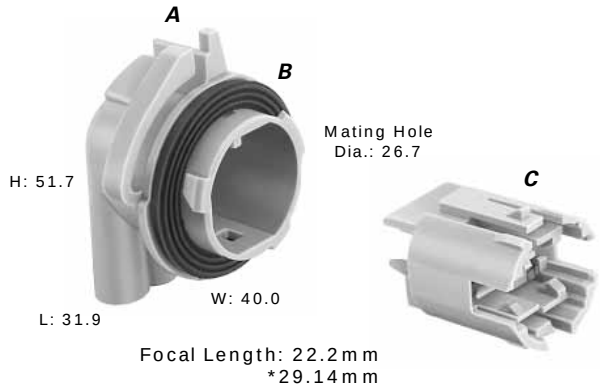


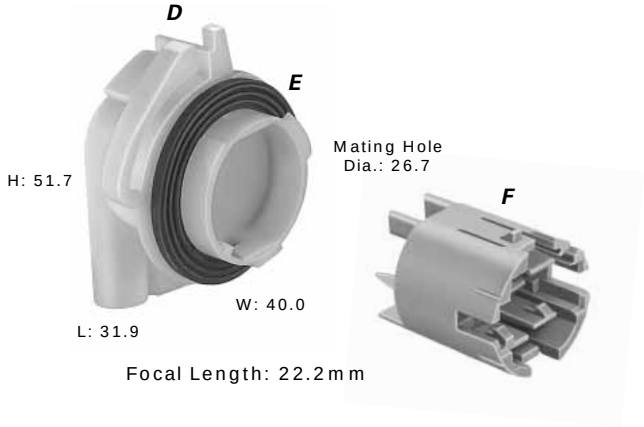


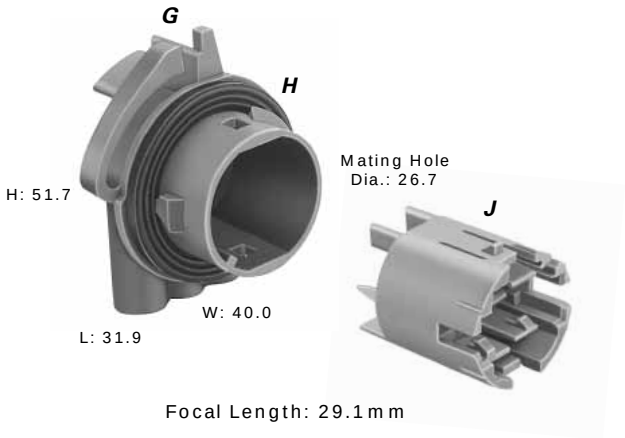


### G. Part No: 12160395

| | |
|---|---|
| Description: | W-3 Right Angle Wedge Base |
| Size: | 26.7 Hole Dia. x 31.9L x 51.7H x 40.0W |
| Color: | Md. Gray |
| Material: | PA66 HS IM |
| Terminals: | See A, Page 6.3 |
| Seals: | 280 Metri-Pack Cable Seals |
| Typical Lamp: | #3057 |

### H. Part No: 12129909*

| | |
|---|---|
| Description: | Seal |
| Color: | Black |
| Material: | EPDM |

### J. Part No: 12177163

| | |
|---|---|
| Description: | Insert |
| Color: | Beige |
| Material: | PA66 HS IM |

**When an unsealed application is required, use gasket 12020720 in place of seal 12129909.

**NOTE:** Specifications in this catalog are for general reference only and are subject to change without notice. To verify product information, please contact a Delphi representative.

# Lamp Sockets

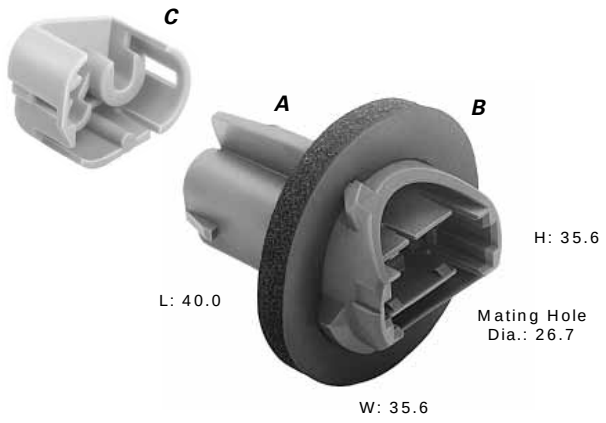


Focal Length: 29.1mm

### A. Part No: 12191243

| | |
|---|---|
| Description: | W-3 Axial Wedge Base |
| Size: | 26.7 Hole Dia. x 40.0L x 35.6H x 35.6W |
| Color: | Dk. Gray |
| Material: | PA66 HS IM 14% GF |
| Terminals: | See E, Page 6.3 (2 Contacts, 1 Ground) |
| Seals: | 280 and 630 Metri-Pack Cable Seals |
| Typical Lamp: | #3057 |

### B. Part No: 12129909*

| | |
|---|---|
| Description: | Seal |
| Color: | Black |
| Material: | EPDM |

### C. Part No: 15305473

| | |
|---|---|
| Description: | TPA |
| Color: | Lt. Gray |
| Material: | PA66 HS IM |

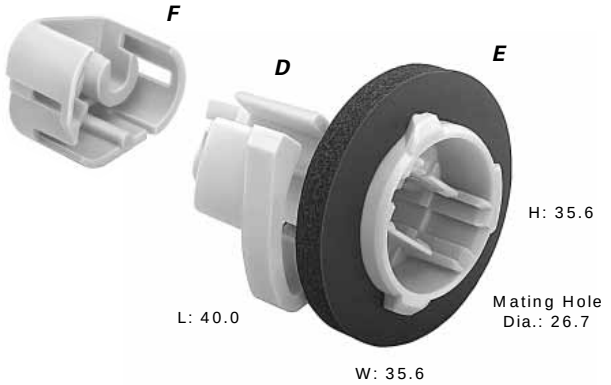


Focal Length: 22.2mm

### D. Part No: 15435155 (Gray)
### 15485094 (Black)

| | |
|---|---|
| Description: | W-3 Axial Wedge Base |
| Size: | 26.7 Hole Dia. x 40.0L x 35.6H x 35.6W |
| Material: | PA66 HS IM 14% GF |
| Terminals: | See E, Page 6.3 (2 Contacts, 1 Ground) |
| Seals: | 280 and 630 Metri-Pack Cable Seals |
| Typical Lamp: | #3057 |

### E. Part No: 12129909*

| | |
|---|---|
| Description: | Seal |
| Color: | Black |
| Material: | EPDM |

### F. Part No: 15305473

| | |
|---|---|
| Description: | TPA |
| Color: | Lt. Gray |
| Material: | PA66 HS IM |

* When an unsealed application is required, use gasket 12020720 (pictured) in place of seal 12129909.



**NOTE:** Specifications in this catalog are for general reference only and are subject to change without notice. To verify product information, please contact a Delphi representative.

# Lamp Sockets

## A. Part No: 12162223 (Clear)
## 12162222 (White)

| | |
|---|---|
| Description: | W-2 Axial Wedge Base |
| Size: | 10.4 Hole Dia. x 53.0L x 18.0H x 32.6W |
| Material: | PC |
| Terminals: | See B, Page 6.3 |
| Typical Lamp: | #194 |

## B. Part No: 12052490

| | |
|---|---|
| Description: | TPA |
| Color: | Black |
| Material: | PA6 |

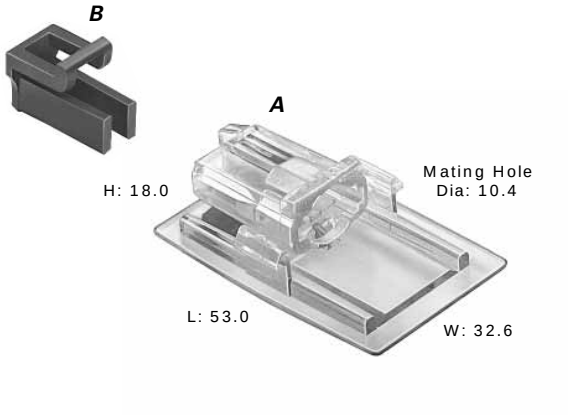


## C. Part No: 12059952

| | |
|---|---|
| Description: | W-2 Axial Wedge Base |
| Size: | 15.7 Hole Dia. x 27.0L x 24.6H x 24.6W |
| Color: | Black |
| Material: | PA66 HS IM |
| Terminals: | See B, Page 6.3 |
| Typical Lamp: | #194 |

## D. Part No: 15324722

| | |
|---|---|
| Description: | TPA |
| Color: | Red |
| Material: | PBT HS IM |

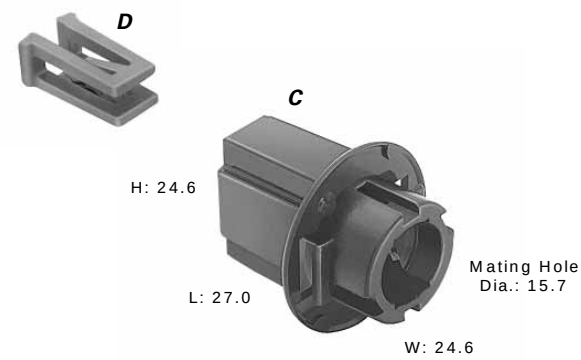


**NOTE:** Specifications in this catalog are for general reference only and are subject to change without notice. To verify product information, please contact a Delphi representative.

# Lamp Sockets

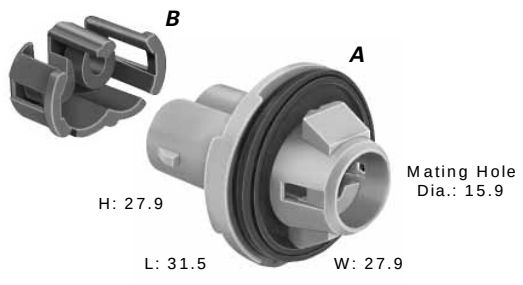


Focal Length: 15.5mm

### A. Part No: 15324946*

| | |
|---|---|
| Description: | W-2 Axial Wedge Base |
| Size: | 15.9 Hole Dia. x 31.5L x 27.9H x 27.9W |
| Color: | Dk. Gray |
| Material: | PA66 HS IM 14% GF |
| Terminals: | See D, Page 6.3 |
| Seals: | 480 Metri-Pack Cable Seals |
| Typical Lamp: | #168 or #912 |

### B. Part No: 12110054

| | |
|---|---|
| Description: | TPA |
| Color: | Black |
| Material: | PA66 HS IM |

*12146398 seal part of 15324946 assembly

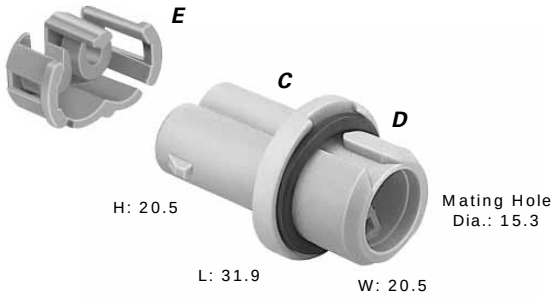


Focal Length: 15.5mm

### C. Part No: 15317651

| | |
|---|---|
| Description: | W-2 Axial Wedge Base |
| Size: | 15.3 Hole Dia. x 31.9L x 20.5H x 20.5W |
| Color: | Lt. Gray |
| Material: | PA66 HS 33% GF |
| Terminals: | See C, Page 6.3 |
| Seals: | 280 Metri-Pack Cable Seals |
| Typical Lamp: | #194 |

### D. Part No: 15317652

| | |
|---|---|
| Description: | O-Ring |
| Color: | Black |
| Material: | EPDM |

### E. Part No: 12191522

| | |
|---|---|
| Description: | TPA |
| Color: | Blue |
| Material: | PA66 HS IM |

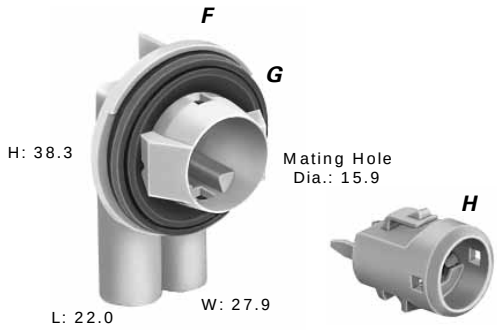


Focal Length: 15.5mm

### F. Part No: 12146418

| | |
|---|---|
| Description: | W-2 Right Angle Wedge Base |
| Size: | 15.9 Hole Dia. x 22.0L x 38.3H x 27.9W |
| Color: | Lt. Gray |
| Material: | PA66 HS IM |
| Terminals: | See A, Page 6.3 |
| Seals: | 280 Metri-Pack Cable Seals |
| Typical Lamp: | #168 |

### G. Part No: 12146398

| | |
|---|---|
| Description: | Seal |
| Color: | Black |
| Material: | Santoprene |

### H. Part No: 15324428

| | |
|---|---|
| Description: | Insert |
| Color: | Lt. Gray |
| Material: | PA66 |

**NOTE:** Specifications in this catalog are for general reference only and are subject to change without notice. To verify product information, please contact a Delphi representative.

# Lamp Sockets

### A. Part No: 12160386

| | |
|---|---|
| Description: | B-1 Right Angle Bayonet Base |
| Size: | 26.8 Hole Dia. x 27.2L x 62.6H x 41.1W |
| Color: | Lt. Gray |
| Material: | PA66 HS IM |
| Terminals: | See F, Page 6.3 (1 Contact, 1 Ground) |
| Seals: | 280 Metri-Pack Cable Seals |
| Typical Lamp: | #1156 |

### B. Part No: 12129909*

| | |
|---|---|
| Description: | Seal |
| Color: | Black |
| Material: | EPDM |

### C. Part No: 12129057

| | |
|---|---|
| Description: | TPA |
| Color: | Blue |
| Material: | PA66 HS IM |

### D. Part No: 12160390

| | |
|---|---|
| Description: | C-2 Right Angle Bayonet Base |
| Size: | 26.8 Hole Dia. x 27.2L x 62.6H x 41.1W |
| Color: | Cream |
| Material: | PA66 HS IM |
| Terminals: | See F, Page 6.3 (2 Contacts, 1 Ground) |
| Seals: | 280 Metri-Pack Cable Seals |
| Typical Lamp: | #2057 |

### E. Part No: 12129909*

| | |
|---|---|
| Description: | Seal |
| Color: | Black |
| Material: | EPDM |

### F. Part No: 12129051

| | |
|---|---|
| Description: | TPA |
| Color: | Blue |
| Material: | PA66 HS IM |

### G. Part No: 12160392

| | |
|---|---|
| Description: | C-2 Right Angle Bayonet Base |
| Size: | 26.8 Hole Dia. x 21.6L x 62.6H x 41.1W |
| Color: | Md. Gray |
| Material: | PA66 HS IM |
| Terminals: | See F, Page 6.3 (2 Contacts, 1 Ground) |
| Seals: | 280 Metri-Pack Cable Seals |
| Typical Lamp: | #2057 |

### H. Part No: 12129909*

| | |
|---|---|
| Description: | Seal |
| Color: | Black |
| Material: | EPDM |

### J. Part No: 12129051

| | |
|---|---|
| Description: | TPA |
| Color: | Blue |
| Material: | PA66 HS IM |

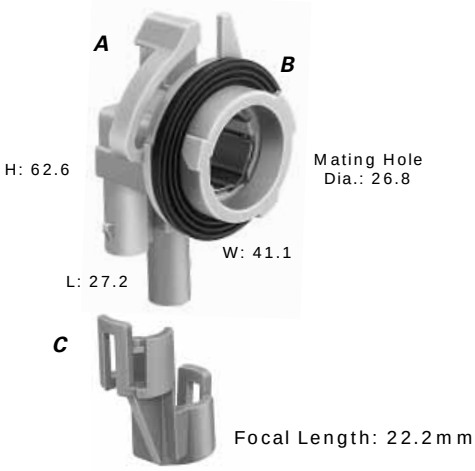


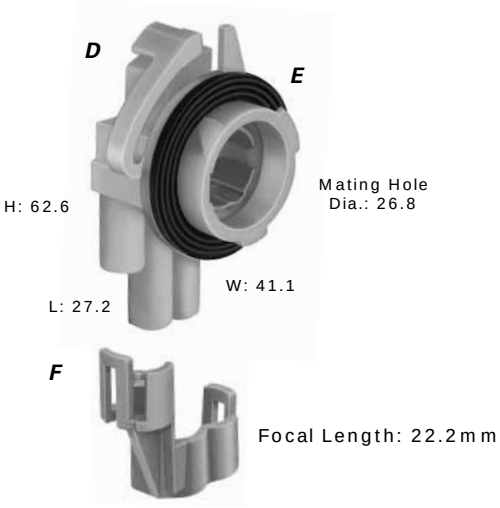


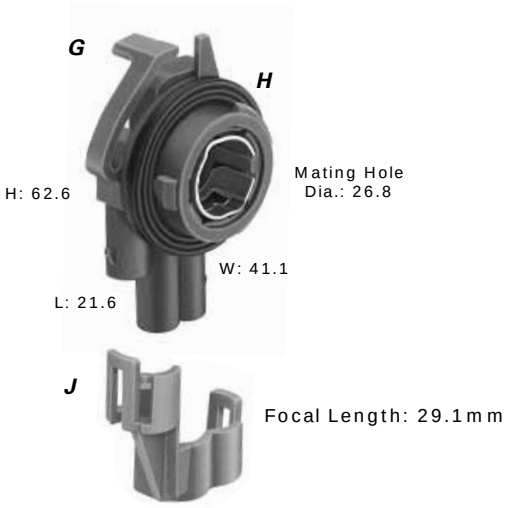


* When an unsealed application is required, use gasket 12020720 in place of seal 12129909.

**NOTE:** Specifications in this catalog are for general reference only and are subject to change without notice. To verify product information, please contact a Delphi representative.

# Splice Savers

## Unsealed System Application Information

### GT 150 Series Terminals – Tin Plated

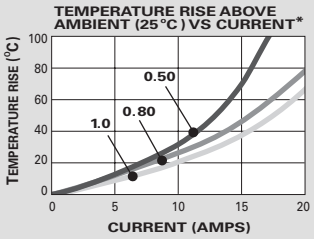


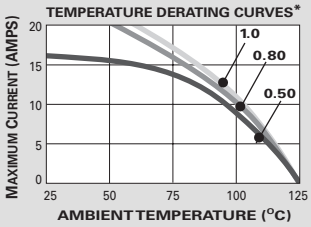


CABLE RANGE (mm²): ..... 0.35-1.0
CURRENT RANGE (AMPS): ..... 0-15
TEMP RANGE °C: ..... -40 to 125
RESISTANCE: ..... <10mΩ@20mV

VOLTAGE DROP: ... <10.0mV/amp
CENTERLINE SPACING (mm): ..... 3.4
BLADE WIDTH (mm): ..... 1.5

### 280 Series Terminals – Tin Plated

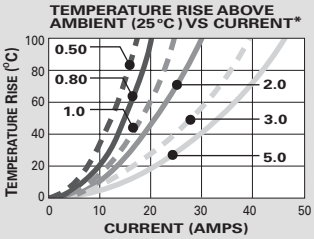


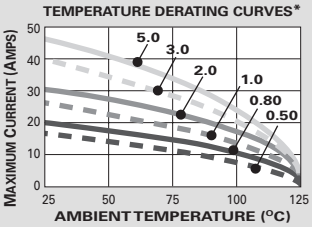


CABLE RANGE (mm²): ..... 0.35-5.0
CURRENT RANGE (AMPS): ..... 0-30
TEMP RANGE °C: ..... -40 to 125
RESISTANCE: ..... <10mΩ@20mV

VOLTAGE DROP: ..... <5.0mV/amp
CENTERLINE SPACING (mm): .5.0/6.3
BLADE WIDTH (mm): ..... 2.8

*The test data are based on single circuits in free space and were generated using a "Lumped Resistance" model. This model does not account for all of the variables that would be present in an actual application. For actual product performance, contact your regional support representative.

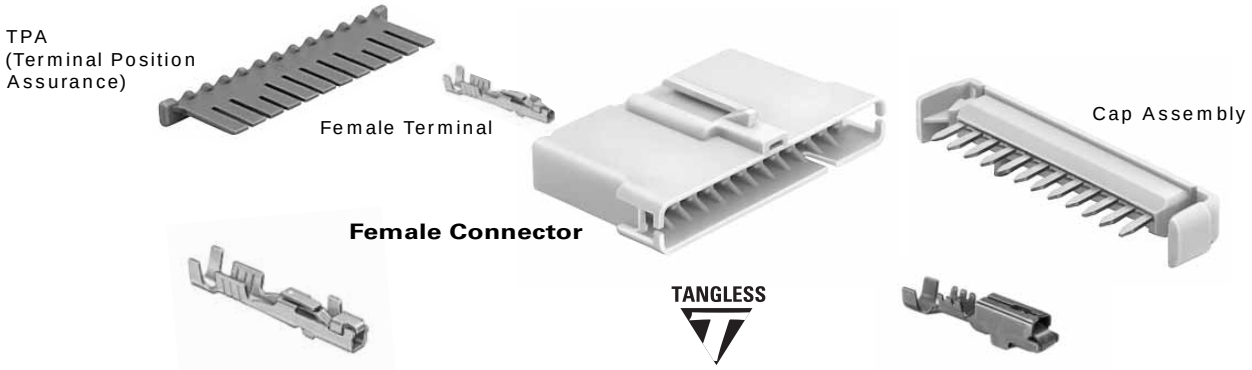


### GT 150 Female Terminals Unsealed

| Part # | Cable Range (mm²) | Material | Plating |
|---|---|---|---|
| 12191811 | 0.50 - 0.35 | Tin Brass | Tin |
| 12191812 | 1.0 - 0.75 | Tin Brass | Tin |

### 280 M/P Tangless Female Terminals Unsealed

| Part # | Cable Range (mm²) | Material | Plating |
|---|---|---|---|
| 12110842 | 3.0 - 2.0 | Tin Brass | Tin |
| 12110844 | 1.0 - 0.80 | Tin Brass | Tin |
| 12110843 | 0.50 - 0.35 | Tin Brass | Tin |
| 12129061 | 2.0-0.35 | Tin Brass | Tin |

### Splice Saver Connections Unsealed

| Cavity Description | Part # | Color | Material | TPA | Cap Assembly | Splice Configuration |
|---|---|---|---|---|---|---|
| 12Way GT 150 | 12191216 | Lt. Gray | PA66 HS IM | 12176462 | 12191217 | 1-12 Way |
| 12Way GT 150 | 12176460 | Black | PA66 HS IM | 12176462 | 12176469 | 2-6 Ways |
| 12Way 280 Metri-Pack Lg. Cavity | 12176473 | Black | PA66 HS IM | 12176475 | 12176478 | 4-3 Ways |
| 12Way 280 Metri-Pack | 15305288 | Black | PA66 HS IM | 12176513 | 15305289 | 2-6 Ways |
| 12Way 280 Metri-Pack | 15305291 | Black | PA66 HS IM | 12176513 | 15305292 | 1-12 Way |
| 12Way 280 Metri-Pack | 15305294 | Black | PA66 HS IM | 12176513 | 15305295 w/M6 Hole | 1-12 Way |
| 12Way 280 Metri-Pack | 15305294 | Black | PA66 HS IM | 12176513 | 15492655 w/M6 Bolt | 1-12 Way |
| 12Way 280 Metri-Pack | 15305294 | Black | PA66 HS IM | 12176513 | 15354635 w/M6 Bolt & Retainer | 1-12 Way |
| 12Way 280 Metri-Pack | 15305297 | Black | PA66 HS IM | 12176513 | 15305298 w/M10 Hole | 1-12 Way |

**NOTE:** Specifications in this catalog are for general reference only and are subject to change without notice. To verify product information, please contact a Delphi representative.

# Splice Savers

Splice Saver connectors are capable of providing one or several splices within a single connection assembly. Splicing is accomplished within the male cap assembly using a segmented bus blade.

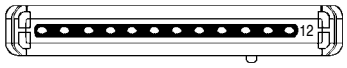


**12191217** Cap Assembly 1-12M Mates to Connector 12191216

**12176469** Cap Assembly 2-6M Mates to Connector 12176460

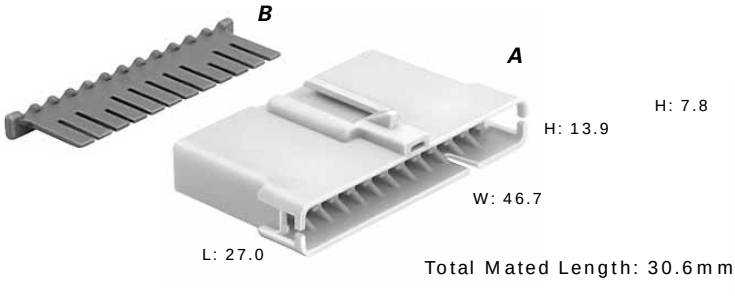


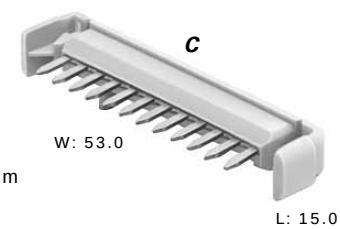


Total Mated Length: 30.6mm

### A. Part No: 12191216 (Lt. Gray) 12176460 (Black)

| | |
|---|---|
| Description: | Connector GT 150 12F |
| Size: | 27.0L x 13.9H x 46.7W |
| Material: | PA66 HS IM |
| Terminals: | See Page 6.10, GT 150 |

### B. Part No: 12176462

| | |
|---|---|
| Description: | TPA |
| Color: | Md. Gray |
| Material: | PA66 HS IM |

### C. Part No: 12191217 (Md. Gray, 1-12M) 12176469 (Lt. Gray, 2-6M)

| | |
|---|---|
| Description: | Cap Assembly |
| Size: | 15.0L x 7.8H x 53.0W |
| Material: | PA66 HS IM |

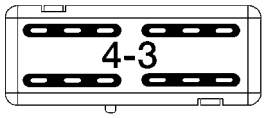


**12176478** Cap Assembly 4-3M Mates to Connector 12176473

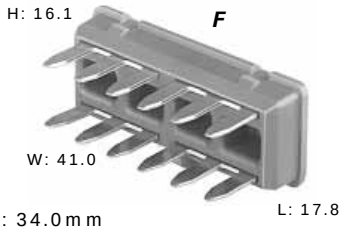


TANGLESS

Total Mated Length: 34.0mm

### D. Part No: 12176473

| | |
|---|---|
| Description: | Connector Metri-Pack 280 12F (Large Cavity) |
| Size: | 29.7L x 19.6H x 44.6W |
| Color: | Black |
| Material: | PA66 HS IM |
| Terminals: | See Page 6.10, 280 Metri-Pack Tangless |

### E. Part No: 12176475

| | |
|---|---|
| Description: | TPA |
| Color: | Gray |
| Material: | PA66 HS IM |

### F. Part No: 12176478

| | |
|---|---|
| Description: | Cap Assembly 4-3M |
| Size: | 17.8L x 16.1H x 41.0W |
| Color: | Brown |
| Material: | PA66 HS IM |

**NOTE:** Specifications in this catalog are for general reference only and are subject to change without notice. To verify product information, please contact a Delphi representative.

# Splice Savers

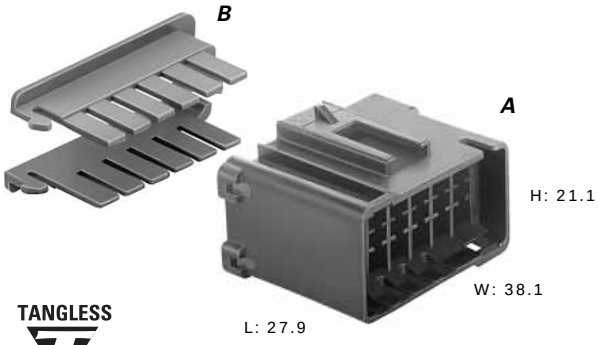


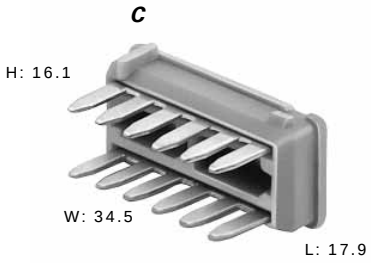


TANGLESS

Total Mated Length: 34.0mm

**A. Part No: 15305288**
**15305291**

| | |
|---|---|
| Description: | Connector 280 Metri-Pack 12F |
| Size: | 27.9L x 21.1H x 38.1W |
| Color: | Black |
| Material: | PA66 HS IM |
| Terminals: | See Page 6.10, 280 Metri-Pack Tangless |

**B. Part No: 12176513**

| | |
|---|---|
| Description: | TPA |
| Color: | Md. Gray |
| Material: | PA66 HS IM |

**C. Part No: 15305289**
**(Lt. Green, 2-6M)**
**15305292**
**(Cream, 1-12M)**

| | |
|---|---|
| Description: | Cap Assembly |
| Size: | 17.9L x 16.1H x 34.5W |
| Material: | PA66 HS IM |

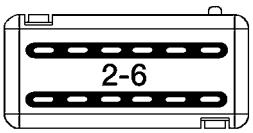


**15305289** Cap Assembly 2-6M Mates to Connector 15305288

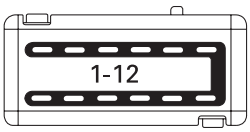


**15305292** Cap Assembly 1-12M Mates to Connector 15305291

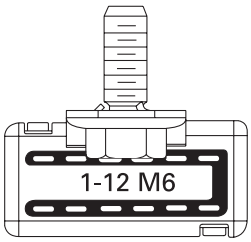


**15492655** Cap Assembly 1-12M with Bolt Mates to Connector 15305294

**15354635** Cap Assembly 1-12M with Bolt/Retainer Mates to Connector 15305294

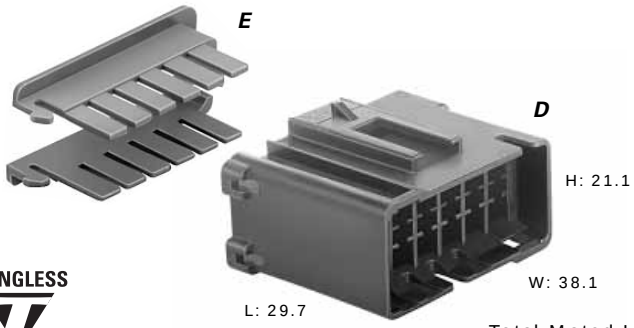


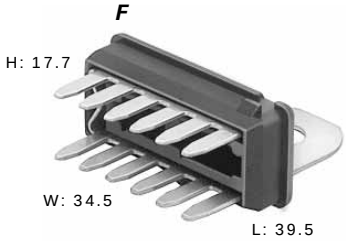


TANGLESS

Total Mated Length: 56.7mm

**D. Part No: 15305294**
**15305297**

| | |
|---|---|
| Description: | Connector 280 Metri-Pack 12F |
| Size: | 29.7L x 21.1H x 38.1W |
| Color: | Black |
| Material: | PA66 HS IM |
| Terminals: | See Page 6.10, 280 Metri-Pack Tangless |

**E. Part No: 12176513**

| | |
|---|---|
| Description: | TPA |
| Color: | Md. Gray |
| Material: | PA66 HS IM |

**F. Part No: 15492655**
**(Black, M6 Bolt Included)**
**15305295**
**(Black, M6 Hole)**
**15354635**
**(Black, M6 Bolt and Retainer Included)**
**15305298**
**(Beige, M10 Hole)**

| | |
|---|---|
| Description: | Cap Assembly 1-12M |
| Size: | 39.5L x 17.7H x 34.5W |
| Material: | PA66 HS IM |

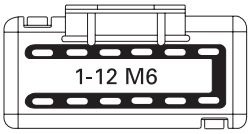


**15305295** Cap Assembly 1-12M Mates to Connector 15305294

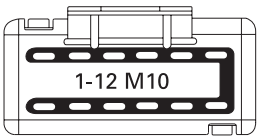


**15305298** Cap Assembly 1-12M Mates to Connector 15305297

**NOTE:** Specifications in this catalog are for general reference only and are subject to change without notice. To verify product information, please contact a Delphi representative.

# Splice Savers

## Sealed System Application Information

### GT 150 Series Terminals – Tin Plated

CABLE RANGE (mm²): ..... 0.35-1.0

CURRENT RANGE (AMPS): ..... 0-15

TEMP RANGE °C: ..... -40 to 125

RESISTANCE: ..... <10mΩ@20mV

VOLTAGE DROP: .... <10.0mV/amp

CENTERLINE SPACING (mm): ..... 4.5

BLADE WIDTH (mm): ..... 1.5

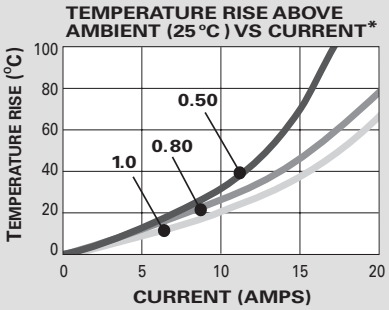


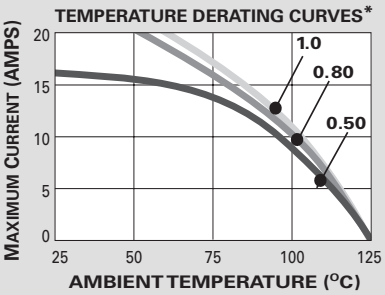


*The test data are based on single circuits in free space and were generated using a "Lumped Resistance" model. This model does not account for all of the variables that would be present in an actual application. For actual product performance, contact your regional support representative.

TPA (Terminal Position Assurance)

Cable Seal

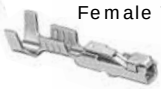

Female Terminal

Female Connector

Cap Assembly

### GT 150 Female Terminals Sealed

| Part # | Cable Range (mm²) | Material | Plating |
|---|---|---|---|
| 12191818 | 0.50 - 0.35 | Tin Brass | Tin |
| 12191819 | 1.0 - 0.75 | Tin Brass | Tin |

### GT 150 Cable Seals

| Reel Part # | Loose Part # | Cable Range (mm²) | Material | Color |
|---|---|---|---|---|
| 12191152 | 15366021 | 1.20 - 1.90 | Silicone | White |
| 12191153 | 15366060 | 1.86 - 2.40 | Silicone | Blue |

### GT 150 Cavity Plug*

| Part # | Cavity Diameter | Material | Color |
|---|---|---|---|
| 15305171 | 4.0 mm | Silicone | Green |

*Cavity plugs seal unused female and male cavities.

### Splice Saver Connections Sealed

| Cavity Description | Part # | Color | Material | TPA | Cap Assembly | Splice Configuration |
|---|---|---|---|---|---|---|
| 6Way GT 150 | 12191910 | Black | PA66 HS IM 14% GF | 12191911 | 12191914 w/Seal | 1-6 Way |
| 12Way GT 150 | 12191900 | Black | PA66 HS IM14% GF | 12191901 | 12191904 w/Seal | 1-12 Way |
| 12Way GT 150 | 12191905 | Black | PA66 HS IM14% GF | 12191901 | 12191908 w/Seal | 3-4 Ways |

**NOTE:** Specifications in this catalog are for general reference only and are subject to change without notice. To verify product information, please contact a Delphi representative.

# Splice Savers

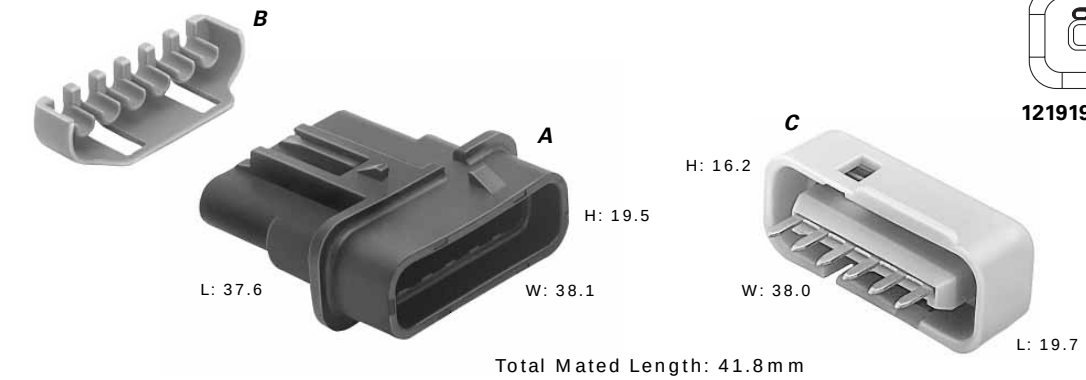


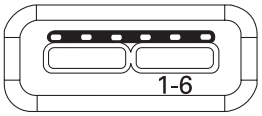


**12191914** Cap Assembly 1-6M Mates to Connector 12191910

### A. Part No: 12191910

| | |
|---|---|
| Description: | Connector 150 GT 6F |
| Size: | 37.6L x 19.5H x 38.1W |
| Color: | Black |
| Material: | PA66 HS IM 14% GF |
| Terminals: | See Page 6.13 |
| Seals/Plugs: | See Page 6.13 |

### C. Part No: 12191914

| | |
|---|---|
| Description: | Cap Assembly 1-6M (w/Seal) |
| Size: | 19.7L x 16.2H x 38.0W |
| Color: | Lt. Green |
| Material: | PA66 HS IM |

### B. Part No: 12191911

| | |
|---|---|
| Description: | TPA |
| Color: | Md. Gray |
| Material: | PA66 HS IM |

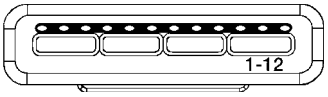


**12191904** Cap Assembly 1-12M w/Seal Mates to Connector 12191900

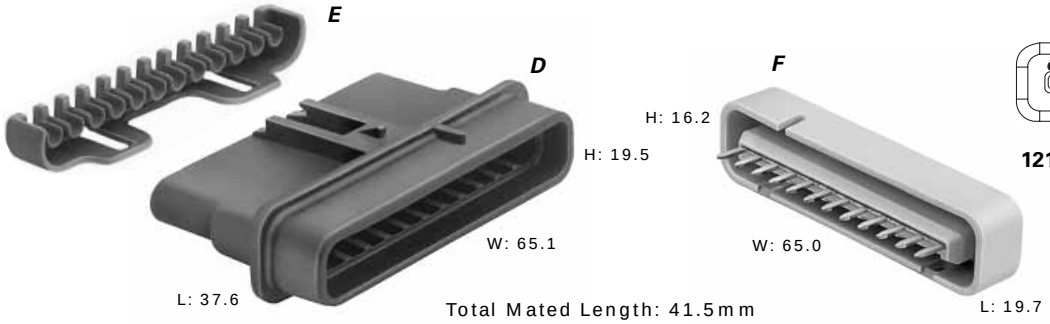


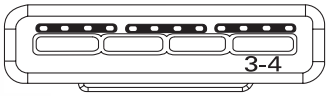


**12191908** Cap Assembly 3-4M w/Seal Mates to Connector 12191905

### D. Part No: 12191900 12191905

| | |
|---|---|
| Description: | Connector 150 GT 12F |
| Size: | 37.6L x 19.5H x 65.1W |
| Color: | Black |
| Material: | PA66 HS IM 14% GF |
| Terminals: | See Page 6.13 |
| Seals/Plugs: | See Page 6.13 |

### E. Part No: 12191901

| | |
|---|---|
| Description: | TPA |
| Color: | Md. Gray |
| Material: | PA66 HS IM |

### F. Part No: 12191904 (Cream 1-12M w/Seal) 12191908 (Blue 3-4M w/Seal)

| | |
|---|---|
| Description: | Cap Assembly |
| Size: | 19.7L x 16.2H x 65.0W |
| Material: | PA66 HS IM |

**NOTE:** Specifications in this catalog are for general reference only and are subject to change without notice. To verify product information, please contact a Delphi representative.

# Weather-Pack

## Cross Sectional View

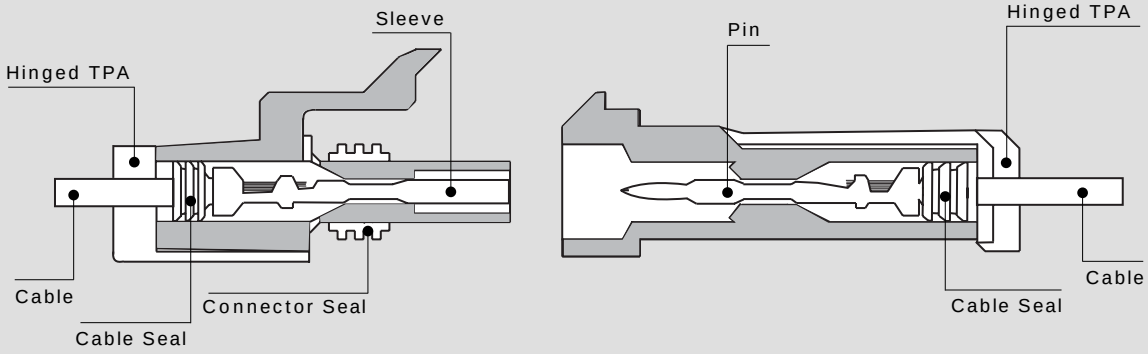


**Female Connector Assembly** **Male Connector**

Cable Seal

Female Terminal (Sleeve)

**Female Connector Assembly**

### Weather-Pack Female Terminals (Sleeve) Sealed*

| Sleeve Part # | Cable Range (mm²) | Material | Plating |
|---|---|---|---|
| 12124581 | 3.0 | Tin Brass | Tin |
| 12124580 | 2.0-1.0 | Tin Brass | Tin |
| 12089188 | 0.80-0.50 | Tin Brass | Tin |
| 12020801 | 0.35 | Tin Brass | Tin |

* Use of the Weather-Pack 6060 gauge as a process control aid is recommended for Weather-Pack terminals. See page 10.5 in the Application Tooling section for details.

### Weather-Pack Cable Seals

| Reel Part # | Loose Part # | Cable Dia. | Material | Color |
|---|---|---|---|---|
| 12015360 | 15324981 | 4.30-3.45 | Silicone | Blue |
| 12015359 | 15324980 | 3.49-2.81 | Silicone | Gray |
| 12015284 | 15324982 | 2.85-2.03 | Silicone | Green |
| 12041352 | 15324984 | 2.42-2.03 | Silicone | Tan |
| 12089444 | 15324985 | 2.15-1.60 | Silicone | Purple |
| 12034365 | 15324983 | 1.70-1.29 | Silicone | Dk.Red |

### Weather-Pack Female Connector Assemblies Sealed

| # Cavities | Connector Assembly | Color | Material |
|---|---|---|---|
| 1 | 12015791 | Black | PA6 |
| 2 | 12015792 | Black | PA66 HS IM |
| 3 | 12020829 | Black | PA66 HS IM |
| 4 | 12015798 | Black | PA6 |
| 4 | 12020832 | Black | PA66 HS IM |
| 6 | 12020926 | Black | PA66 HS IM |
| 22 | 15492531 | Black | PA6 |

**NOTE:** Specifications in this catalog are for general reference only and are subject to change without notice. To verify product information, please contact a Delphi representative.

# Weather-Pack

## Sealed System Application Information

CABLE RANGE (mm²): ..... 0.35-3.0

CURRENT RANGE (AMPS): ..... 0-20

TEMP RANGE °C: ..... -40 to 125

RESISTANCE: ..... <10m @20mV

VOLTAGE DROP: ..... <3.0mV/amp

CENTERLINE SPACING (mm): ..... 7.7

BLADE WIDTH (mm): ... Pin and Sleeve

### Weather-Pack Terminals – Tin Plated

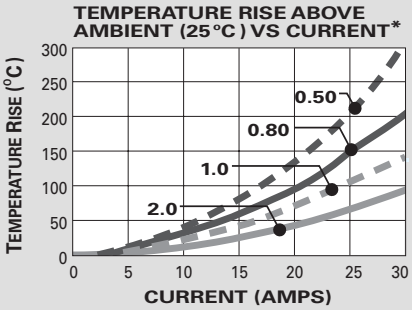


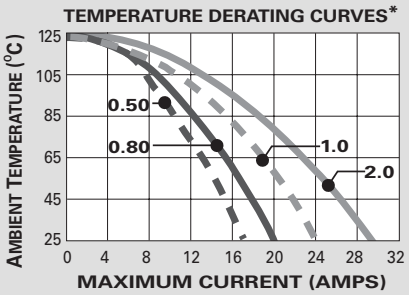


*The test data are based on single circuits in free space and were generated using a "Lumped Resistance" model. This model does not account for all of the variables that would be present in an actual application. For actual product performance, contact your regional support representative.

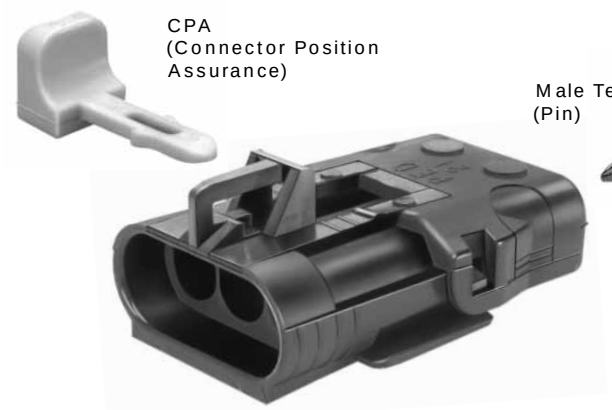


Male Connector

### Weather-Pack Male Terminals (Pin) Sealed*

| Pin Part # | Cable Range (mm²) | Material | Plating |
|---|---|---|---|
| 12124587 | 3.0 | Tin Brass | Tin |
| 12124582 | 2.0-1.0 | Tin Brass | Tin |
| 12089040 | 0.80-0.50 | Tin Brass | Tin |
| 12089307 | 0.35-0.22 | Tin Brass | Tin |

*Use of the Weather-Pack 6060 gauge as a process control aid is recommended for Weather-Pack terminals. See page 10.5 in the Application Tooling section for details.

### Weather-Pack Male Connectors Sealed

| # Cavities | Connector | Color | Material |
|---|---|---|---|
| 1 | 12010996 | Black | PA66 HS IM |
| 2 | 12010973 | Black | PA6 |
| 3 | 12020827 | Cream | PA66 HS IM |
| 4 | 12015024 | Black | PA6 |
| 4 | 12020830 | Black | PA66 HS IM |
| 6 | 12020786 | Black | PA66 HS IM |
| 22 | 15492521 | Black | PA66 HS IM |

### Weather-Pack Cavity Plug*

| Part # | Cavity Inside Dia. | Material | Color |
|---|---|---|---|
| 12010300 | 6.7mm | Silicone | Green |

*Cavity plugs seal unused female and male cavities.

**SECTION NOTES:**

- Due to rigid tolerances of connector cavities, it is critical to meet all crimp dimensions as specified.
- Different color and connector indexing features are also available.

**NOTE:** Specifications in this catalog are for general reference only and are subject to change without notice. To verify product information, please contact a Delphi representative.

# Weather-Pack

An environmentally sealed connection system that utilizes triple-rib peripheral silicone rubber seals and individual towers to provide terminal isolation for connector alignment. Weather-Pack sealed systems are ideally suited for critical applications that require protection from environmental hazards.

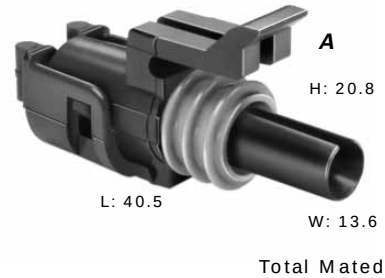


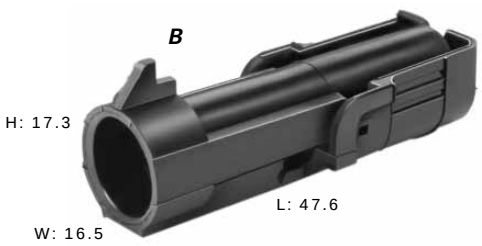


Total Mated Length: 64.5mm

**A. Part No: 12015791**

| | |
|---|---|
| Description: | Connector Assembly 1F |
| Size: | 40.5L x 20.8H x 13.6W |
| Color: | Black |
| Material: | PA6 |
| Terminals: | See Page 6.16 |
| Seals/Plugs: | See Page 6.16, 6.17 |

**B. Part No: 12010996**

| | |
|---|---|
| Description: | Connector 1M |
| Size: | 47.6L x 17.3H x 16.5W |
| Color: | Black |
| Material: | PA66 HS IM |
| Terminals: | See Page 6.17 |
| Seals/Plugs: | See Page 6.16, 6.17 |

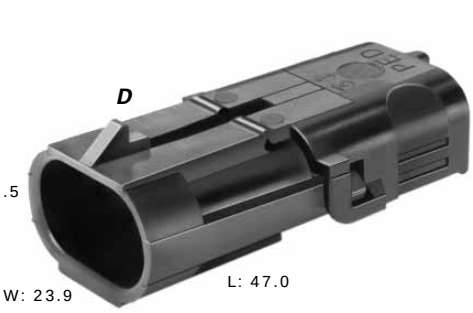


Total Mated Length: 68.3mm

**C. Part No: 12015792 (Black)**
PA66 HS IM
**12103784 (Lt. Gray)**
PA6

| | |
|---|---|
| Description: | Connector Assembly 2F |
| Size: | 40.8L x 20.8H x 21.5W |
| Terminals: | See Page 6.16 |
| Seals/Plugs: | See Page 6.16, 6.17 |

**D. Part No: 12010973 (Black)**
PA6
**12034074 (Md. Gray)**
PA66 HS IM

| | |
|---|---|
| Description: | Connector 2M (Clip Slot) |
| Size: | 47.0L x 17.5H x 23.9W |
| Terminals: | See Page 6.17 |
| Seals/Plugs: | See Page 6.16, 6.17 |

**NOTE:** Specifications in this catalog are for general reference only and are subject to change without notice. To verify product information, please contact a Delphi representative.

# Weather-Pack

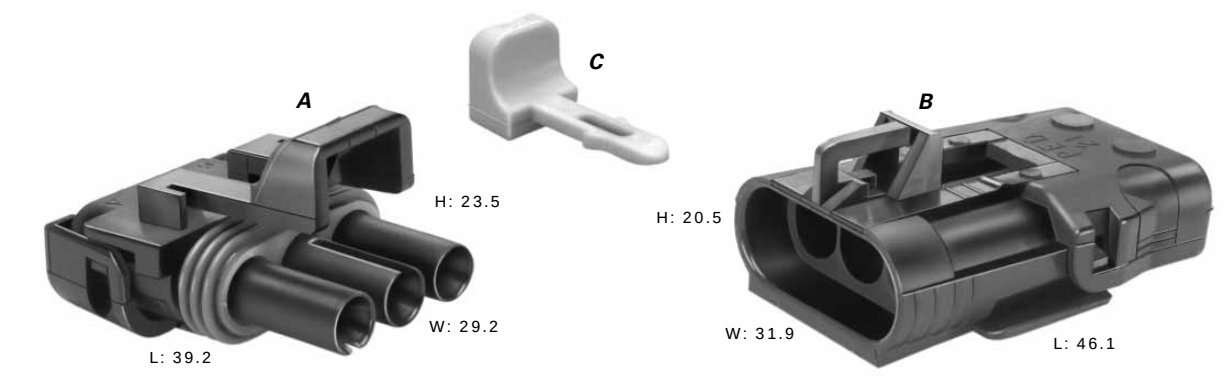


Total Mated Length: 65.8mm

### A. Part No: 12020829

| | |
|---|---|
| Description: | Connector Assembly 3F |
| Size: | 39.2L x 23.5H x 29.2W |
| Color: | Black |
| Material: | PA66 HS IM |
| Terminals: | See Page 6.16 |
| Seals/Plugs: | See Page 6.16, 6.17 |

### B. Part No: 12020827

| | |
|---|---|
| Description: | Connector 3M (Clip Slot) |
| Size: | 46.1L x 20.5H x 31.9W |
| Color: | Cream |
| Material: | PA66 HS IM |
| Terminals: | See Page 6.17 |
| Seals/Plugs: | See Page 6.16, 6.17 |

### C. Part No: 12020833

| | |
|---|---|
| Description: | CPA |
| Color: | Gray |
| Material: | PBT |

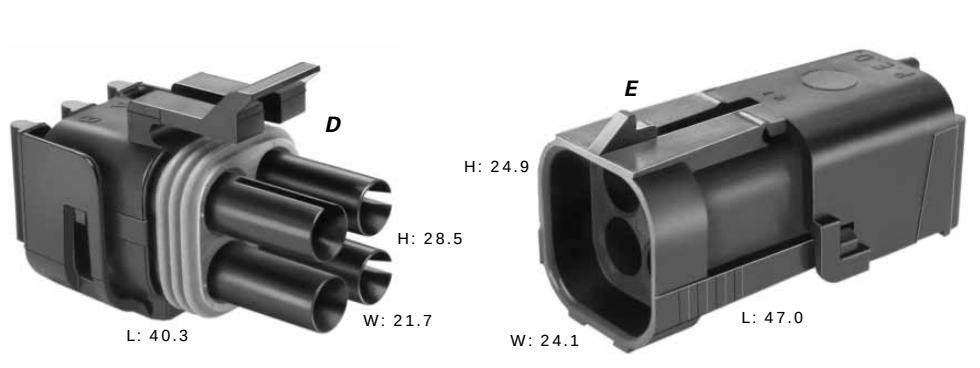


Total Mated Length: 68.3mm

### D. Part No: 12015798

| | |
|---|---|
| Description: | Connector Assembly 4F |
| Size: | 40.3L x 28.5H x 21.7W |
| Color: | Black |
| Material: | PA6 |
| Terminals: | See Page 6.16 |
| Seals/Plugs: | See Page 6.16, 6.17 |

### E. Part No: 12015024

| | |
|---|---|
| Description: | Connector 4M (Clip Slot) |
| Size: | 47.0L x 24.9H x 24.1W |
| Color: | Black |
| Material: | PA6 |
| Terminals: | See Page 6.17 |
| Seals/Plugs: | See Page 6.16, 6.17 |

**NOTE:** Specifications in this catalog are for general reference only and are subject to change without notice. To verify product information, please contact a Delphi representative.

# Weather-Pack

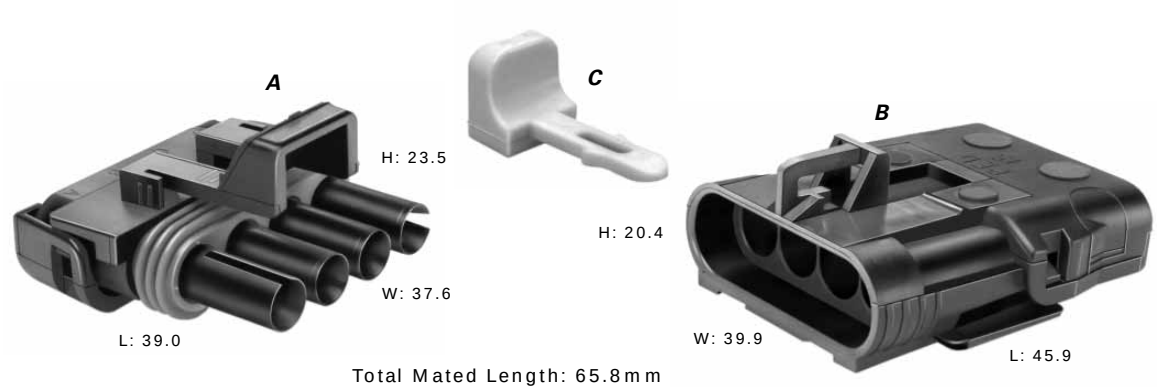


### A. Part No: 12020832

| | |
|---|---|
| Description: | Connector Assembly 4F |
| Size: | 39.0L x 23.5H x 37.6W |
| Color: | Black |
| Material: | PA66 HS IM |
| Terminals: | See Page 6.16 |
| Seals/Plugs: | See Page 6.16, 6.17 |

### B. Part No: 12020830

| | |
|---|---|
| Description: | Connector 4M (Clip Slot) |
| Size: | 45.9L x 20.4H x 39.9W |
| Color: | Black |
| Material: | PA66 HS IM |
| Terminals: | See Page 6.17 |
| Seals/Plugs: | See Page 6.16, 6.17 |

### C. Part No: 12020833

| | |
|---|---|
| Description: | CPA |
| Color: | Gray |
| Material: | PBT |

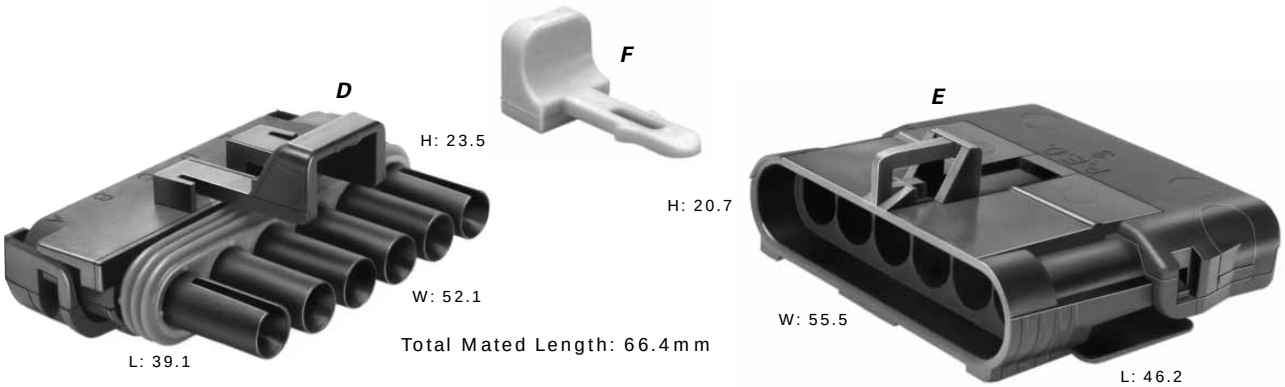


### D. Part No: 12020926

| | |
|---|---|
| Description: | Connector Assembly 6F |
| Size: | 39.1L x 23.5H x 52.1W |
| Color: | Black |
| Material: | PA66 HS IM |
| Terminals: | See Page 6.16 |
| Seals/Plugs: | See Page 6.16, 6.17 |

### E. Part No: 12020786

| | |
|---|---|
| Description: | Connector 6M (Clip Slot) |
| Size: | 46.2L x 20.7H x 55.5W |
| Color: | Black |
| Material: | PA66 HS IM |
| Terminals: | See Page 6.17 |
| Seals/Plugs: | See Page 6.16, 6.17 |

### F. Part No: 12020833

| | |
|---|---|
| Description: | CPA |
| Color: | Gray |
| Material: | PBT |

**NOTE:** Specifications in this catalog are for general reference only and are subject to change without notice. To verify product information, please contact a Delphi representative.

# Weather-Pack

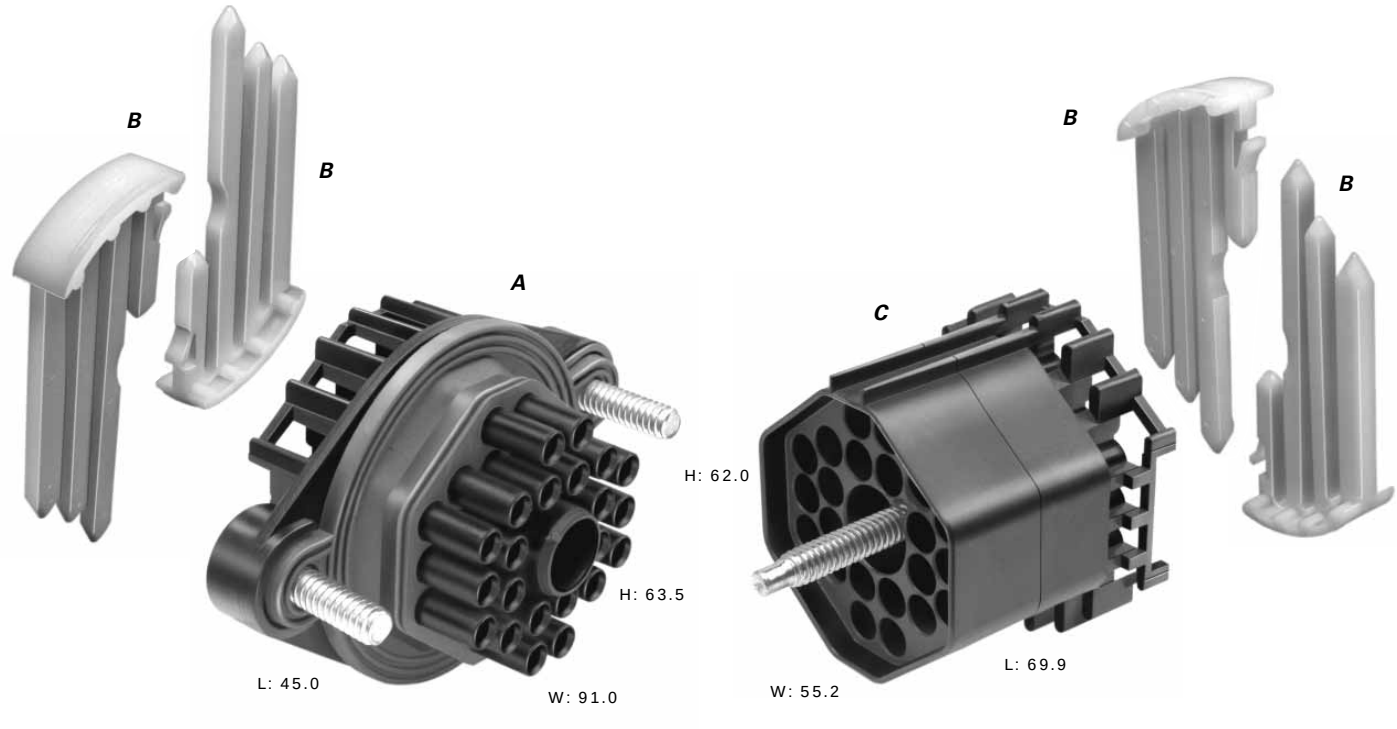


Total Mated Length: 77.3mm

### A. Part No: 15492531

| | |
|---|---|
| Description: | Connector Assembly 22F |
| Size: | 45.0L x 63.5H x 91.0W |
| Color: | Black |
| Material: | PA6 |
| Terminals: | See Page 6.16 |
| Seals/Plugs: | See Page 6.16, 6.17 |
| Application: | Pass-Through |

### B. Part No: 12010852

| | |
|---|---|
| Description: | Secondary Lock |
| Number Req: | 4 |
| Color: | Natural |
| Material: | PA6 |

### C. Part No: 15492521

| | |
|---|---|
| Description: | Connector Assembly 22M |
| Size: | 69.9L x 62.0H x 55.2W |
| Color: | Black |
| Material: | PA66 HS IM |
| Terminals: | See Page 6.17 |
| Seals/Plugs: | See Page 6.16, 6.17 |
| Application: | Pass-Through |

**NOTE:** Specifications in this catalog are for general reference only and are subject to change without notice. To verify product information, please contact a Delphi representative.

# VF Connections

## Unsealed System Application Information

### 280 Series Terminals – Tin Plated

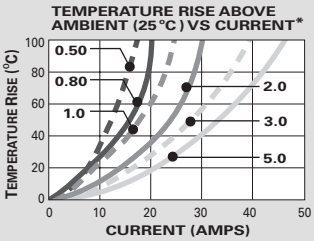


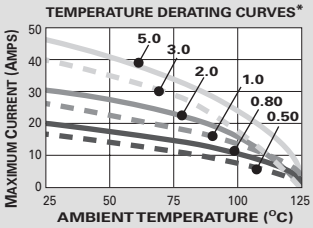


CABLE RANGE (mm²): ..... 0.5-2.5
CURRENT RANGE (AMPS): ..... 19
TEMP RANGE °C: ..... -40 to 125
RESISTANCE: ..... <10mΩ@20mV

VOLTAGE DROP: ..... <4.0mV/amp
CENTERLINE SPACING (mm): ..... 5.0
BLADE WIDTH (mm): ..... 2.8

### 630 Series Terminals – Tin Plated

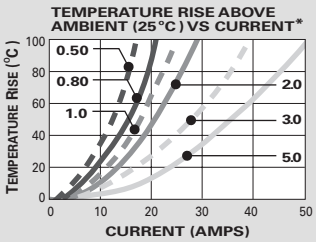


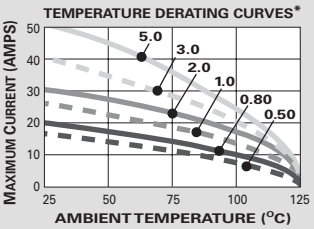


CABLE RANGE (mm²): ..... 0.5-2.5
CURRENT RANGE (AMPS): ..... 33
TEMP RANGE °C: ..... -40 to 135
RESISTANCE: ..... <10mΩ@20mV

VOLTAGE DROP: ..... <4.0mV/amp
CENTERLINE SPACING (mm): ..... 8.0
BLADE WIDTH (mm): .....
..... 4.8 (6.3 ALSO POSSIBLE)

*The test data are based on single circuits in free space and were generated using a "Lumped Resistance" model. This model does not account for all of the variables that would be present in an actual application. For actual product performance, contact your regional support representative.

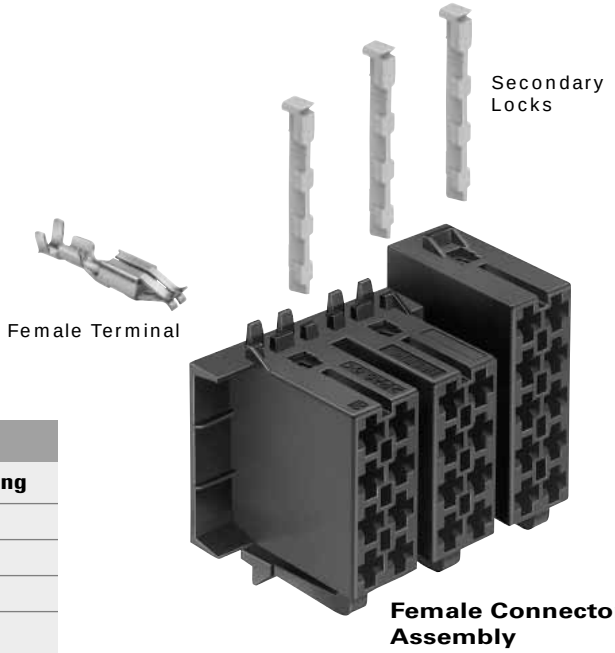


| VF 280 Female Terminals Unsealed | | | |
|---|---|---|---|
| **Part #** | **Cable Range (mm²)** | **Material** | **Plating** |
| 12157735 | 1.0-0.50 | Brass | Tin |
| 12197559 | 2.5-1.0 | Brass | Tin |
| 12198151 | 1.0-0.50 | Bronze | Tin |
| 12157736 | 2.5-1.0 | Bronze | Tin |

| VF 630 Female Terminals Unsealed | | | |
|---|---|---|---|
| **Part #** | **Cable Range (mm²)** | **Material** | **Plating** |
| 15327398 | 1.0-0.50 | Bronze | Tin |
| 15327399 | 1.0-0.50 | STOL 76 | Tin |
| 15327400 | 2.5-1.0 | STOL 76 | Tin |

| VF Female Connector Assemblies Unsealed | | | |
|---|---|---|---|
| **# Cavities** | **Conn. Assembly** | **Color** | **Material** |
| 9 | 12198409 | Black | PA66 15% GF |
| 12 | 15327221 | Black | PA66 HS IM |
| 16 | 15363852 | Black | PA66 |
| 25 | 15363846 | Yellow | PA66 |
| 26 | 15327416 | Black | PA66 |

**NOTE:** Specifications in this catalog are for general reference only and are subject to change without notice. To verify product information, please contact a Delphi representative.

# VF Connections

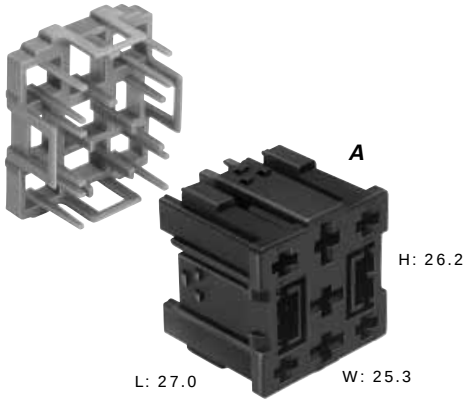


**A. Part No: 12198409**

| | |
|---|---|
| Description: | Connector Assembly 9F |
| Size: | 27.0L x 26.2H x 25.3W |
| Color: | Black |
| Material: | PA66 15% GF |
| Terminals: | See Page 6.22 |
| Typical App: | Relay Base |

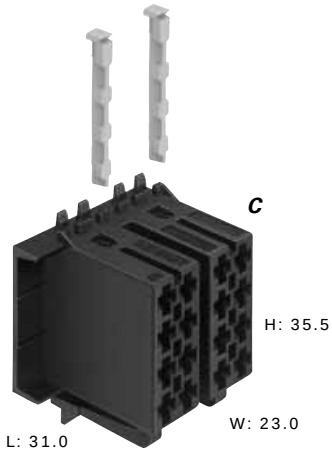


**C. Part No: 15363852**

| | |
|---|---|
| Description: | Connector Assembly 16F |
| Size: | 31.0L x 35.5H x 23.0W |
| Color: | Black |
| Material: | PA66 |
| Terminals: | See Page 6.22 |
| Typical App: | Radio |

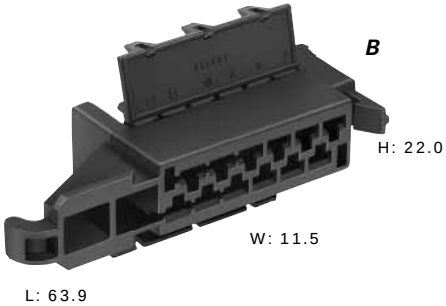


**B. Part No: 15327221**

| | |
|---|---|
| Description: | Connector Assembly 12F |
| Size: | 63.9L x 22.0H x 11.5W |
| Color: | Black |
| Material: | PA66 HS IM |
| Terminals: | See Page 6.22 |
| Typical App: | Turn Lights |

**NOTE:** Specifications in this catalog are for general reference only and are subject to change without notice. To verify product information, please contact a Delphi representative.

# VF Connections

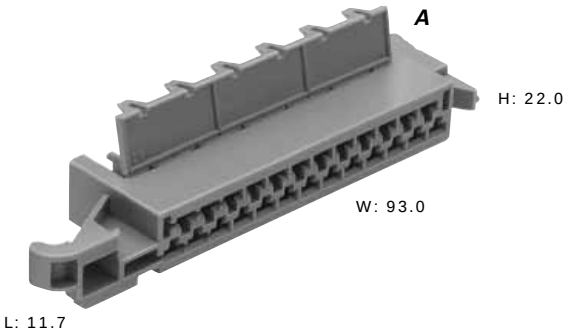


**A. Part No: 15363846**

| | |
|---|---|
| Description: | Connector 25F |
| Size: | 93.0L x 22.0H x 11.7W |
| Color: | Yellow |
| Material: | PA66 |
| Terminals: | See Page 6.22 |
| Typical App: | Alarm |

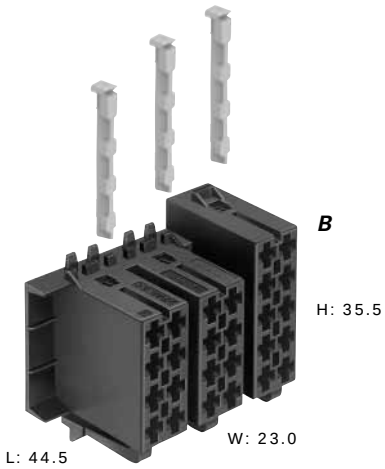


**B. Part No: 15327416**

| | |
|---|---|
| Description: | Connector Assembly 26F |
| Size: | 44.5L x 35.5H x 23.0W |
| Color: | Black |
| Material: | PA66 |
| Terminals: | See Page 6.22 |
| Typical App: | Radio |

**NOTE:** Specifications in this catalog are for general reference only and are subject to change without notice. To verify product information, please contact a Delphi representative.

# VF Device Connections

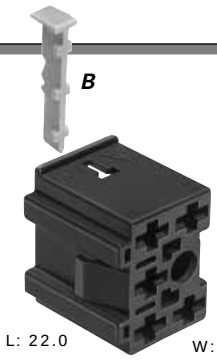


### A. Part No: 15344630

| | |
|---|---|
| Description: | Connector 5F |
| Size: | 22.0L x 25.4H x 21.0W |
| Color: | Black |
| Material: | PA66 |
| Terminals: | See Page 6.22 |
| Typical App: | 5-Way Switch |

### B. Part No: 12147500

| | |
|---|---|
| Description: | Secondary Lock |
| Color: | Yellow |
| Material: | PA66 25% GF |

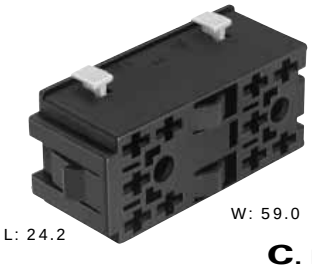


### C. Part No: 12147496

| | |
|---|---|
| Description: | Connector Assembly 10F |
| Size: | 24.2L x 25.2H x 59.0W |
| Color: | Black |
| Material: | PA66 |
| Terminals: | See Page 6.22 |
| Typical App: | Double 5-Way Switch |

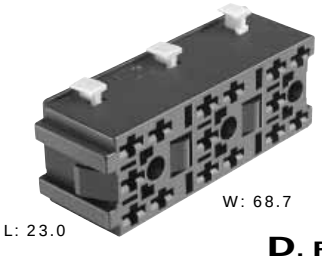


### D. Part No: 12147497

| | |
|---|---|
| Description: | Connector Assembly 15F |
| Size: | 23.0L x 25.4H x 68.7W |
| Color: | Black |
| Material: | PA66 |
| Terminals: | See Page 6.22 |
| Typical App: | Triple 5-Way Switch |

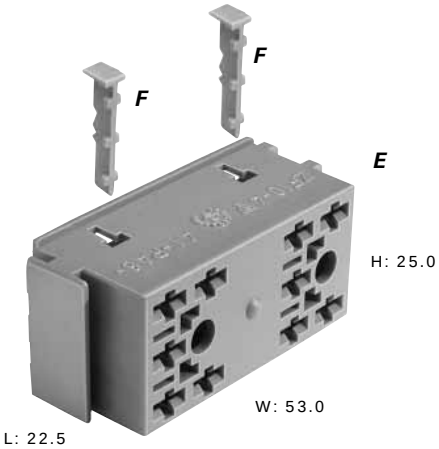


### E. Part No: 12185521

| | |
|---|---|
| Description: | Connector 10F |
| Size: | 22.5L x 25.0H x 53.0W |
| Color: | Blue |
| Material: | PA6 |
| Terminals: | See Page 6.22 |
| Typical App: | Double 5-Way Switch |

### F. Part No: 12185243

| | |
|---|---|
| Description: | Secondary Lock |
| Number Req: | 2 |
| Color: | Gray |
| Material: | PA6 15% GF |

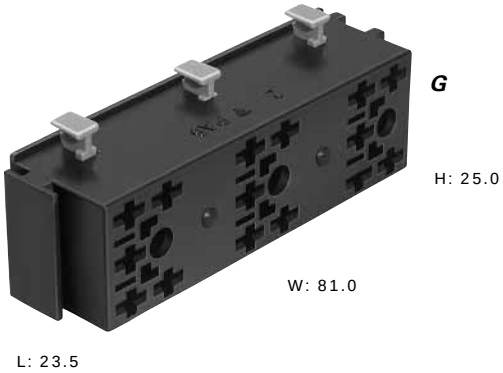


### G. Part No: 10740413

| | |
|---|---|
| Description: | Connector Assembly 15F |
| Size: | 23.5L x 25.0H x 81.0W |
| Color: | Black |
| Material: | PA6 |
| Terminals: | See Page 6.22 |
| Typical App: | Triple 5-Way Switch |

**NOTE:** Specifications in this catalog are for general reference only and are subject to change without notice. To verify product information, please contact a Delphi representative.

# DS Connections

## Sealed System Application Information

### 280 Series Terminals – Tin Plated

CABLE RANGE (mm²): ..... 0.5-2.5

CURRENT RANGE (AMPS): ..... 19

TEMP RANGE °C: ..... -40 to 125

RESISTANCE: ..... <10mΩ@20mV

VOLTAGE DROP: ..... <4.0mV/amp

CENTERLINE SPACING (mm): ..... 5.0

BLADE WIDTH (mm): ..... 2.8

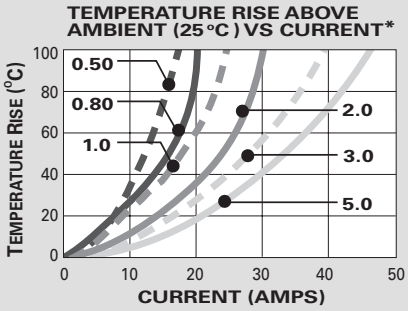


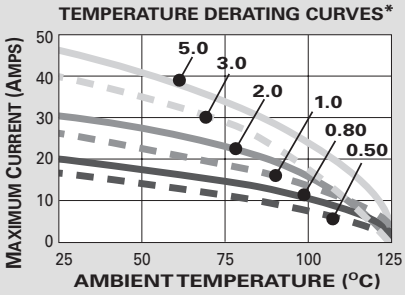


*The test data are based on single circuits in free space and were generated using a "Lumped Resistance" model. This model does not account for all of the variables that would be present in an actual application. For actual product performance, contact your regional support representative.

Cable Seal

Female Terminal

**Female Connector Assembly**

### DS 280 Female Terminals Sealed

| Part # | Cable Range (mm²) | Material | Plating |
|---|---|---|---|
| 12157739 | 1.0-0.50 | Bronze | Tin |
| 12157740 | 2.5-1.0 | Bronze | Tin |
| 15327192 | 1.0-0.50 | Bronze | Tin |
| 12198103 | 2.5-1.0 | Bronze | Tin |

### DS 280 Cable Seals

| Reel Part # | Loose Part # | Cable Dia. | Material | Color |
|---|---|---|---|---|
| 12015360 | 10720851 | 4.30-3.45 | Silicone | Blue |
| 12015359 | 15324980 | 3.49-2.81 | Silicone | Gray |
| 12015284 | 15324982 | 2.85-2.03 | Silicone | Green |
| 12041352 | 15324984 | 2.42-2.03 | Silicone | Tan |
| 12089444 | 15324985 | 2.15-1.60 | Silicone | Purple |
| 12034365 | 15324983 | 1.70-1.29 | Silicone | Dk.Red |

### DS Female Connector Assemblies Sealed

| # Cavities | Conn. Assembly | Color | Material |
|---|---|---|---|
| 2 | 12196895 | Black | PA66 30% GF |
| 2 | 15364309 | Black | PA66 30% GF |
| 3 | 12158456 | Black | PA66 30% GF |
| 3 | 15364318 | Yellow | PA66 30% GF |
| 5 | 12158457 | Black | PA66 30% GF |

**NOTE:** Specifications in this catalog are for general reference only and are subject to change without notice. To verify product information, please contact a Delphi representative.

# DS Connections

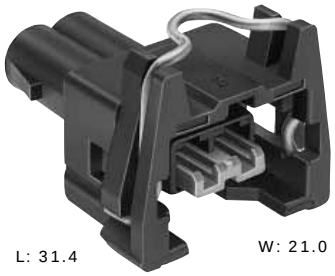


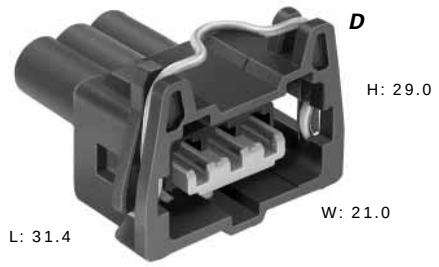


**A. Part No: 12196895**

| | |
|---|---|
| Description: | Connector Assembly 2F |
| Size: | 31.4L x 24.0H x 21.0W |
| Color: | Black |
| Material: | PA66 30% GF |
| Terminals: | See Page 6.26 |
| Seals: | See Page 6.26 |
| Typical App: | Injector |

**D. Part No: 12158456**

| | |
|---|---|
| Description: | Connector Assembly 3F |
| Size: | 31.4L x 29.0H x 21.0W |
| Color: | Black |
| Material: | PA66 30% GF |
| Terminals: | See Page 6.26 |
| Seals: | See Page 6.26 |
| Typical App: | Fuel Pump |

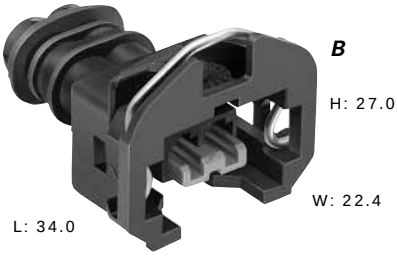


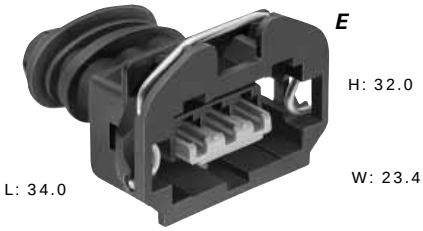


**B. Part No: 15364309**

| | |
|---|---|
| Description: | Connector Assembly 2F |
| Size: | 34.0L x 27.0H x 22.4W |
| Color: | Black |
| Material: | PA66 30% GF |
| Terminals: | See Page 6.26 |
| Seals: | See Page 6.26 |
| Typical App: | Injector |

**E. Part No: 15364318**

| | |
|---|---|
| Description: | Connector Assembly 3F |
| Size: | 34.0L x 32.0H x 23.4W |
| Color: | Black |
| Material: | PA66 30% GF |
| Terminals: | See Page 6.26 |
| Seals: | See Page 6.26 |
| Typical App: | Fuel Pump |

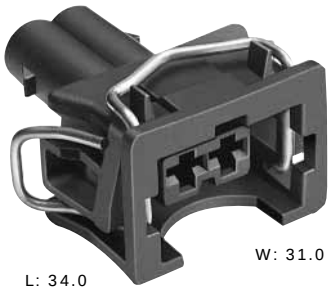


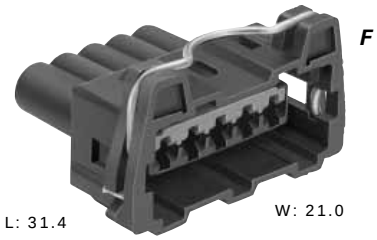


**C. Part No: 12084126**

| | |
|---|---|
| Description: | Connector Assembly 2F |
| Size: | 34.0L x 18.8H x 31.0W |
| Color: | Black |
| Material: | PA66 30% GF |
| Terminals: | See Page 6.26 |
| Typical App: | Injector |

**F. Part No: 12158457**

| | |
|---|---|
| Description: | Connector Assembly 5F |
| Size: | 31.4L x 39.0H x 21.0W |
| Color: | Black |
| Material: | PA66 30% GF |
| Terminals: | See Page 6.26 |
| Seals: | See Page 6.26 |
| Typical App: | Ignition System |

**NOTE:** Specifications in this catalog are for general reference only and are subject to change without notice. To verify product information, please contact a Delphi representative.

# Modular & Traditional

Delphi designs and manufactures various types of electrical centers to meet all unique customer requirements. Delphi's Electrical Centers can be custom designed or supplied from existing designs to meet your needs. Centers are available in Modular and Traditional style, and have the flexibility to accept both SAE and ISO approved device footprints.

## Electrical Center Features

- Centralizes all circuit protection within a wiring system
- Accommodates Mini-Relay and Micro-Relays as well as MINI® Fuses and MAXI™ Fuses
- Modular Electrical Centers create a unique electrical center by combining appropriate modules into a standardized base

# Modular

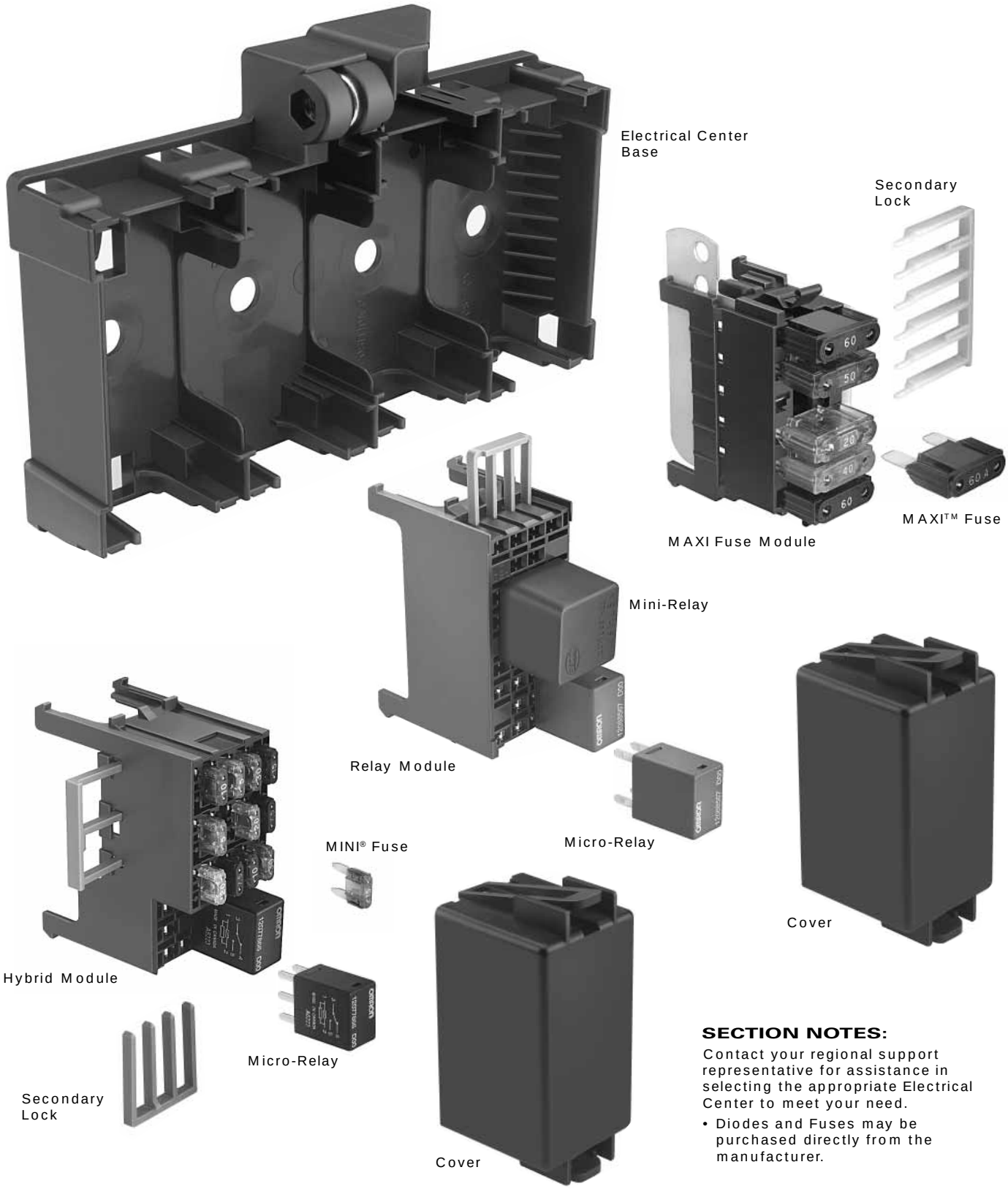


**SECTION NOTES:**

Contact your regional support representative for assistance in selecting the appropriate Electrical Center to meet your need.

- Diodes and Fuses may be purchased directly from the manufacturer.

**NOTE:** Specifications in this catalog are for general reference only and are subject to change without notice. To verify product information, please contact a Delphi representative.

# Modular

MINI Fuse Module

Diode

MINI® Fuse

## MINI® Fuse Modules

| Part # | Application | Color | Material | Secondary Lock | Cover | Latch |
|---|---|---|---|---|---|---|
| 12191544 | 20 MINI Fuses | Black | PA66 HS IM 14% GF | 12146947 | 15324032 | – |
| 12177145 | 28 MINI Fuses | Black | PA66 HS IM 14% GF | 12092507 | 12110043 | 15495959 |

## MAXI™ Fuse Modules

| Part # | Application | Color | Material | Secondary Lock | Cover | Latch |
|---|---|---|---|---|---|---|
| 12110129 | 6 MAXI Fuses RT Battery Feed | Black | PA66 HS 33% GF | 12077563 | – | – |
| 12077569 | 6 MAXI Fuses LT Battery Feed | Black | PA66 HS 33% GF | 12077563 | – | – |
| 12092231 | 8 MAXI Fuses RT Battery Feed | Black | PA66 HS 33% GF | 12077532 | 12077538 | 15495959 |
| 12092220 | 8 MAXI Fuses LT Battery Feed | Black | PA66 HS 33% GF | 12077532 | 12077538 | 15495959 |

Cover

## Relay Modules

| Part # | Application | Color | Material | Secondary Lock | Cover | Latch |
|---|---|---|---|---|---|---|
| 12077571 | 6 Micro-Relays | Black | PA66 HS IM | 12077572 | 12160897 | 15495959 |
| 15423524 | 2 Mini-Relays | Black | PA66 HS IM | 12033872 | 12160897 | 15495959 |
| 12146836 | 1 Mini/2 Micro-Relays | Black | PA66 HS IM | 12146835 | 15324032 | – |

## Hybrid Modules (Combination of Fuse and Relay Cavities)

| Part # | Application | Color | Material | Secondary Lock | Cover | Latch |
|---|---|---|---|---|---|---|
| 12160504 | MINI Fuse, Mini-Relay, Micro-Relay | Black | PA66 HS IM 14% GF | 12160541 | 12160897 | 15495959 |
| 12110594 | 6 MINI Fuses 4 Micro-Relays | Black | PA66 HS IM 14% GF | 12110595 | 12110602 | 15495959 |
| 12146815 | 12 MINI Fuses, 1 Mini-Relay or 2 Micro-Relays | Black | PA66 HS IM 14% GF | 12146816 12146817 | 15324032 | – |
| 12191848 | MINI Fuse, MAXI Fuse, Mini-Relay, Micro-Relay | Black | PA66 HS IM 14% GF | 12191849 | 15305152 | 15495959 |

## Electrical Center Bases

| Part # | Application | Color | Material |
|---|---|---|---|
| 12084910 | 1 Module | Black | PA6 |
| 12092741 | 3 Modules | Black | PA6 |
| 12092328 | 3 Modules w/Battery Feed | Black | PA6 |
| 12129121 | 4 Modules w/Battery Feed | Black | PA6 |
| 12110041 | 4 Modules | Black | PA6 |
| 12191497 | 1 Module | Black | PA6 |
| 12077534 | 1 Module w/Battery Feed | Black | PA6 |

**NOTE:** Specifications in this catalog are for general reference only and are subject to change without notice. To verify product information, please contact a Delphi representative.

# Modular

## 280 Metri-Pack Bus Bar Female Terminals Unsealed 15.0mm Centerline Spacing

| Base Part # to Order | Type | Cable Range ($mm^2$) | Part # After Termination | Material | Plating |
|---|---|---|---|---|---|
| 12160635 | 1Way | 5.0 | 12160643 | Beryllium Copper | Tin |
| 12160636 | 1Way | 3.0 - 2.0 | 12160644 | Beryllium Copper | Tin |
| 12160637 | 1Way | 1.0 - 0.80 | 12160645 | Beryllium Copper | Tin |
| 12160638 | 1Way | 0.50 - 0.35 | 12160646 | Beryllium Copper | Tin |
| 12160641 | 1Way | 1.0 - 0.80 (2 Req'd.) | 12160665 | Beryllium Copper | Tin |
| 12160640 | 1Way | 0.50 (2 Req'd.) | 12160663 | Beryllium Copper | Tin |
| 12160642 | 1Way | 0.35 (2 Req'd.) | 12160667 | Beryllium Copper | Tin |
| 12160635 | 2Way | 5.0 | 12160648 | Beryllium Copper | Tin |
| 12160636 | 2Way | 3.0 - 2.0 | 12160649 | Beryllium Copper | Tin |
| 12160637 | 2Way | 1.0 - 0.80 | 12160650 | Beryllium Copper | Tin |
| 12160641 | 2Way | 1.0 - 0.80 (2 Req'd.) | 12160666 | Beryllium Copper | Tin |
| 12160635 | 3Way | 5.0 | 12160652 | Beryllium Copper | Tin |
| 12160636 | 3Way | 3.0 - 2.0 | 12160653 | Beryllium Copper | Tin |
| 12160637 | 3Way | 1.0 - 0.80 | 12160654 | Beryllium Copper | Tin |
| 12160638 | 3Way | 0.50 - 0.35 | 12160655 | Beryllium Copper | Tin |
| 12160640 | 3Way | 0.50 (2 Req'd.) | 12160664 | Beryllium Copper | Tin |
| 12160635 | 4Way | 5.0 | 12160657 | Beryllium Copper | Tin |
| 12160636 | 4Way | 3.0 - 2.0 | 12160658 | Beryllium Copper | Tin |
| 12160635 | 5Way | 5.0 | 12160660 | Beryllium Copper | Tin |
| 12160636 | 5Way | 3.0 - 2.0 | 12160661 | Beryllium Copper | Tin |
| 12160635 | 6Way | 5.0 | 12160662 | Beryllium Copper | Tin |

## 280 Metri-Pack Bus Bar Female Terminals Unsealed 16.2mm Centerline Spacing

| Base Part # to Order | Type | Cable Range ($mm^2$) | Part # After Termination | Material | Plating |
|---|---|---|---|---|---|
| 12110710 | 2Way | 5.0 | 12110717 | Beryllium Copper | Tin |
| 12110709 | 2Way | 3.0 - 2.0 | 12110713 | Beryllium Copper | Tin |
| 12110708 | 2Way | 1.0 - 0.80 | 12110711 | Beryllium Copper | Tin |
| 12110710 | 3Way | 5.0 | 12110718 | Beryllium Copper | Tin |
| 12110709 | 3Way | 3.0 - 2.0 | 12110714 | Beryllium Copper | Tin |
| 12110708 | 3Way | 1.0 - 0.80 | 12110712 | Beryllium Copper | Tin |
| 12110710 | 4Way | 5.0 | 12110719 | Beryllium Copper | Tin |
| 12110709 | 4Way | 3.0- 2.0 | 12110715 | Beryllium Copper | Tin |
| 12110710 | 5Way | 5.0 | 12110720 | Beryllium Copper | Tin |
| 12110709 | 5Way | 3.0 - 2.0 | 12110716 | Beryllium Copper | Tin |

## 280 Metri-Pack Female Terminals Unsealed

| Part # | Cable Range ($mm^2$) | Material | Plating |
|---|---|---|---|
| 12015858 | 5.0 - 3.0 | Tin Brass | Tin |
| 12129494 | 3.0 - 2.0 | Tin Brass | Tin |
| 12066214 | 2.0 - 1.0 | Tin Brass | Tin |
| 12034046 | 0.80 - 0.50 | Tin Brass | Tin |
| 12052217 | 0.50 - 0.35 | Tin Brass | Tin |

**NOTE:** Specifications in this catalog are for general reference only and are subject to change without notice. To verify product information, please contact a Delphi representative.

# Modular

## 280 Metri-Pack Bus Bar Tangless Female Terminals Unsealed 16.2mm Centerline Spacing

TANGLESS

| Base Part # to Order | Type | Cable Range (mm²) | Part # After Termination | Material | Plating |
|---|---|---|---|---|---|
| 12110647 | 1Way | 5.0 | 12110657 | Beryllium Copper | Tin |
| 12110646 | 1Way | 3.0 - 2.0 | 12110652 | Beryllium Copper | Tin |
| 12110645 | 1Way | 1.0 - 0.80 | 12110649 | Beryllium Copper | Tin |
| 12110644 | 1Way | 0.50 - 0.35 | 12110648 | Beryllium Copper | Tin |
| 12110662 | 1Way | 1.0 - 0.80 (2 Req'd.) | 12110663 | Beryllium Copper | Tin |
| 12110664 | 1Way | 0.35 (2 Req'd.) | 12110665 | Beryllium Copper | Tin |
| 12110685 | 1Way | 0.50 (2 Req'd.) | 12110686 | Beryllium Copper | Tin |
| 12110647 | 2Way | 5.0 | 12110658 | Beryllium Copper | Tin |
| 12110646 | 2Way | 3.0 - 2.0 | 12110653 | Beryllium Copper | Tin |
| 12110645 | 2Way | 1.0 - 0.80 | 12110650 | Beryllium Copper | Tin |
| 12110647 | 3Way | 5.0 | 12110659 | Beryllium Copper | Tin |
| 12110646 | 3Way | 3.0 - 2.0 | 12110654 | Beryllium Copper | Tin |
| 12110645 | 3Way | 1.0 - 0.80 | 12110651 | Beryllium Copper | Tin |
| 12110647 | 4Way | 5.0 | 12110660 | Beryllium Copper | Tin |
| 12110646 | 4Way | 3.0 - 2.0 | 12110655 | Beryllium Copper | Tin |
| 12110647 | 5Way | 5.0 | 12110661 | Beryllium Copper | Tin |
| 12110646 | 5Way | 3.0 - 2.0 | 12110656 | Beryllium Copper | Tin |

## 280 Metri-Pack Tangless Female Terminals Unsealed

TANGLESS

| Part # | Cable Range (mm²) | Material | Plating |
|---|---|---|---|
| 12129425 | 5.0 - 3.0 | Tin Brass | Tin |
| 12129663 | 3.0 | Tin Brass | Tin |
| 12129424 | 2.0 - 1.0 | Tin Brass | Tin |
| 12110844 | 1.0 - 0.80 | Tin Brass | Tin |
| 12110843 | 0.50 - 0.35 | Tin Brass | Tin |
| 12129061 | 2.0 - 0.35 | Tin Brass | Tin |

## 480 Metri-Pack Relay Female Terminals Unsealed

| Part # | Cable Range (mm²) | Material | Plating |
|---|---|---|---|
| 12065892 | 3.0 - 2.0 | Silicon Bronze | Tin |
| 12065894 | 1.0 - 0.80 | Silicon Bronze | Tin |
| 12065893 | 0.50 - 0.35 | Silicon Bronze | Tin |
| 12103948 | 1.0 - 0.80 (2 Req'd.) | Silicon Bronze | Tin |
| 12089236 | 0.35 (2 Req'd.) | Silicon Bronze | Tin |

## 630 Metri-Pack Relay Female Terminals Unsealed

| Part # | Cable Range (mm²) | Material | Plating |
|---|---|---|---|
| 12084588 | 5.0 | Tin Brass | Tin |
| 12052227 | 3.0 | Tin Brass | Tin |
| 12015865 | 2.0 - 1.0 | Tin Brass | Tin |
| 12015864 | 1.0 - 0.80 | Tin Brass | Tin |
| 12052225 | 0.50 - 0.35 | Tin Brass | Tin |
| 12124559 | 0.80 - 0.50 (2 Req'd.) | Tin Brass | Tin |

**NOTE:** Specifications in this catalog are for general reference only and are subject to change without notice. To verify product information, please contact a Delphi representative.

# Modular

## 630 Metri-Pack Female Terminals Unsealed

| Part # | Cable Range ($mm^2$) | Material | Plating |
|---|---|---|---|
| 12084590 | 5.0 - 3.0 | Tin Brass | Tin |
| 12052224 | 3.0 | Tin Brass | Tin |
| 12084596 | 5.0 - 3.0 (2 Req'd.) | Tin Brass | Tin |
| 12015870 | 2.0 - 1.0 | Tin Brass | Tin |
| 12015869 | 0.80 - 0.50 | Tin Brass | Tin |
| 12020035 | 0.80 - 0.50 (2 Req'd.) | Tin Brass | Tin |
| 12052222 | 0.50 - 0.35 | Tin Brass | Tin |

## 800 MAXI Fuse Female Terminals Unsealed

| Part # | Cable Range ($mm^2$) | Material | Plating |
|---|---|---|---|
| 12110127 | 5.0 | Tin Brass | Silver/Nickel |
| 12092445 | 5.0 (2 Req'd.) | Tin Brass | Silver/Nickel |
| 12065916 | 3.0 - 2.0 | Tin Brass | Silver/Nickel |
| 12092444 | 3.0 (2 Req'd.) | Tin Brass | Silver/Nickel |
| 12110128 | 2.0 (2 Req'd.) | Tin Brass | Silver/Nickel |
| 12065915 | 1.0 - 0.80 | Tin Brass | Silver/Nickel |
| 12065918 | 1.0 (2 Req'd.) | Tin Brass | Silver/Nickel |

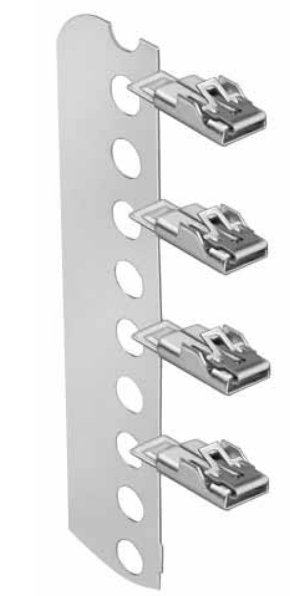

## 800 MAXI Fuse Bus Bar Female Terminals Unsealed

| Part # | Material | Plating |
|---|---|---|
| 12146564 | Copper Alloy/SST | Silver/Nickel |
| 12065930 | Copper Alloy/SST | Silver/Nickel |

Both required for Electrical Center 12146281, page 7.19

## Ring Terminals

| Stud Size | Hole Dia. | Part # | Cable Range ($mm^2$) | Material | Plating |
|---|---|---|---|---|---|
| M6 | 6.70 | 12103965 | 8.0 | Copper Alloy | Tin |
| M6 | 6.70 | 12103511 | 1.0 - 0.8 (2 Req'd.) | Copper Alloy | Tin |
| M6 | 6.70 | 12103512 | 5.0 | Copper Alloy | Tin |
| M6 | 6.70 | 12103513 | 3.0 - 2.0 | Copper Alloy | Tin |
| M6 | 6.70 | 12103514 | 1.0 - 0.80 | Copper Alloy | Tin |
| M8 | 8.50 | 12103502 | 8.0 | Copper Alloy | Tin |
| M8 | 8.50 | 12103504 | 5.0 | Copper Alloy | Tin |
| M8 | 8.50 | 12103506 | 3.0 - 2.0 | Copper Alloy | Tin |
| M8 | 8.50 | 12103508 | 1.0 - 0.80 | Copper Alloy | Tin |

**NOTE:** Specifications in this catalog are for general reference only and are subject to change without notice. To verify product information, please contact a Delphi representative.

# Modular

## 6.3 VF Female Terminals Unsealed

| Part # | Cable Range (mm²) | Material | Plating |
|---|---|---|---|
| 12185268 | 1.0-0.50 | Copper Nickel Silicone | Tin |
| 12185269 | 2.5 - 0.50 | Copper Nickel Silicone | Tin |
| 12157764 | 4.0 | Copper Nickel Silicone | Tin |

## AF Female Terminals Unsealed

| Part # | Cable Range (mm²) | Material |
|---|---|---|
| 12131456 | 1.0-0.50 | CuZn 30 |
| 12131448 | 2.5-1.5 | CuZn 30 |
| 12131455 | 6.0-4.0 | CuZn 30 |

## 280 Metri-Pack Tangless Female Terminals Sealed

TANGLESS

| Part # | Cable Range (mm²) | Material | Plating |
|---|---|---|---|
| 12110853 | 5.0 - 3.0 | Tin Brass | Tin |
| 12129409 | 2.0 | Tin Brass | Tin |

## 630 Metri-Pack Pull-to-Seat Female Terminals

| Part # | Cable Range (mm²) | Material | Plating |
|---|---|---|---|
| 12033997 | 3.0 | Tin Brass | Tin |
| 12066614 | 2.0 - 1.0 | Tin Brass | Tin |
| 12020156 | 0.80 - 0.50 | Tin Brass | Tin |

## 280 Metri-Pack Cable Seals

| Reel Part # | Loose Part # | Cable Dia. | Material | Color |
|---|---|---|---|---|
| 12015360 | 15324981 | 4.30-3.45 | Silicone | Blue |
| 12015359 | 15324980 | 3.49-2.81 | Silicone | Gray |
| 12015284 | 15324982 | 2.85-2.03 | Silicone | Green |
| 12041352 | 15324984 | 2.42-2.03 | Silicone | Tan |
| 12089444 | 15324985 | 2.15-1.60 | Silicone | Purple |
| 12034365 | 15324983 | 1.70-1.29 | Silicone | Dk. Red |

## 280 Metri-Pack Cavity Plug*

| Part # | Cavity Inside Dia. | Material | Color |
|---|---|---|---|
| 12010300 | 6.7mm | Silicone | Green |

*Cavity plugs seal unused female and male cavities.

## Pull-to-Seat Cable Seal Plugs*

| Part # | Description | Material | Color | Cable Range (mm²) | Type |
|---|---|---|---|---|---|
| 12065266 | Seal Plug | PA6 | Md. Gray | 1.85-1.65 | Machine Insertion |
| 12034413 | Seal Plug | PA6 | Black | 1.85-1.10 | Hand Insertion |

*Cavity plugs seal unused female and male cavities.

**NOTE:** Specifications in this catalog are for general reference only and are subject to change without notice. To verify product information, please contact a Delphi representative.

# Modular
# MINI® Fuse Modules

### A. Part No: 12191544

| | |
|---|---|
| Description: | MINI Fuse Module |
| Size: | 69.2L x 94.5H x 38.2W |
| Color: | Black |
| Material: | PA66 HS IM 14% GF |
| Terminals: | See Page 7.4 Bus Bar 15.0mm Centerline |
| Application: | 20 MINI® Fuses |

### B. Part No: 12146947

| | |
|---|---|
| Description: | Secondary Lock |
| Color: | Blue |
| Material: | PA66 HS |

### C. Part No: 15324032

| | |
|---|---|
| Description: | Cover |
| Size: | 53.4L x 102.0H x 45.9W |
| Color: | Black |
| Material: | PA6 |

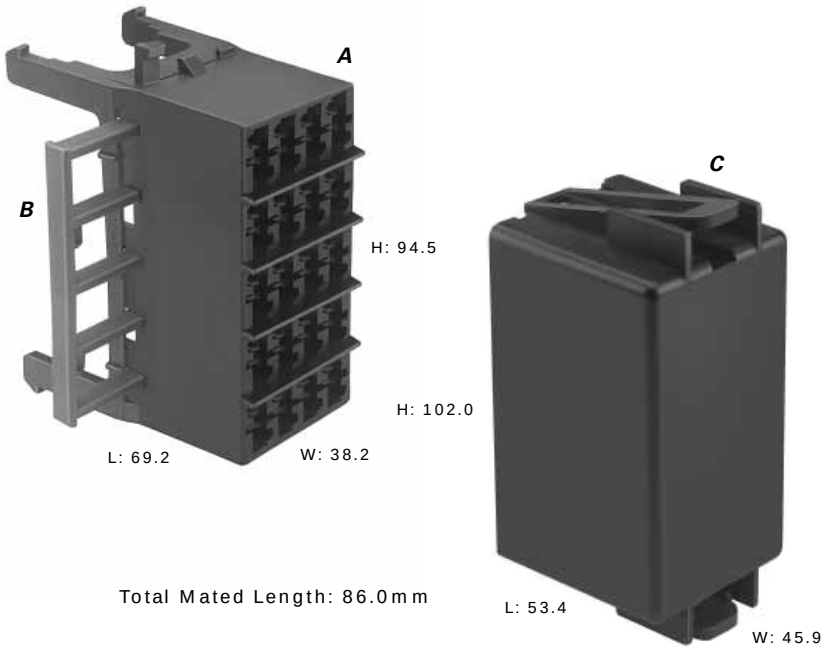


Total Mated Length: 86.0mm

### D. Part No: 12177145

| | |
|---|---|
| Description: | MINI Fuse Module |
| Size: | 69.2L x 113.0H x 38.2W |
| Color: | Black |
| Material: | PA66 HS IM 14% GF |
| Terminals: | See Page 7.4 Bus Bar 15.0mm Centerline |
| Application: | 28 MINI® Fuses |

### E. Part No: 12092507

| | |
|---|---|
| Description: | Secondary Lock |
| Color: | Blue |
| Material: | PBT IM |

### F. Part No: 15495959

| | |
|---|---|
| Description: | Latch |
| Number Req: | 2 |
| Color: | Black |
| Material: | 1050 Steel Annealed |

### G. Part No: 12110043

| | |
|---|---|
| Description: | Cover |
| Size: | 43.2L x 112.8H x 48.5W |
| Color: | Black |
| Material: | PA66 HS IM 14% GF |

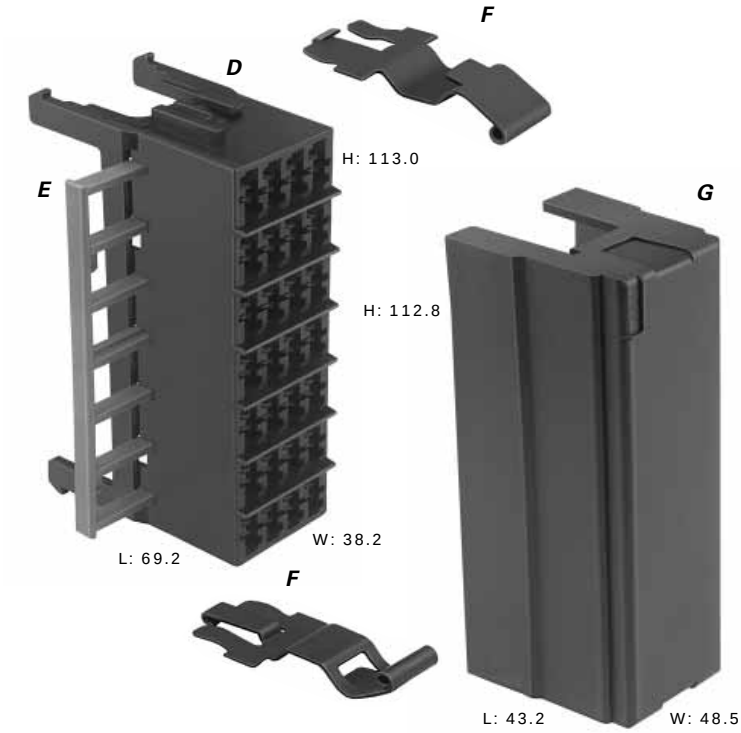


Total Mated Length: 77.6mm

**NOTE:** Specifications in this catalog are for general reference only and are subject to change without notice. To verify product information, please contact a Delphi representative.

# Modular
# MAXI™ Fuse Modules

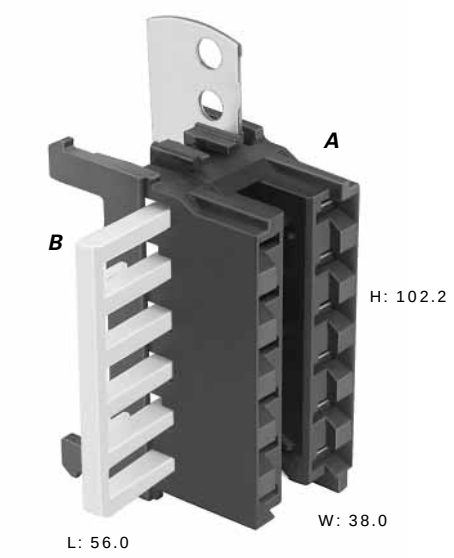


**A. Part No:** **12110129** (Right Battery Feed)
**12077569** (Left Battery Feed)
**12160829** (w/o Bus Bar)

| | |
|---|---|
| Description: | MAXI Fuse Assembly Module |
| Size: | 56.0L x 102.2H x 38.0W |
| Color: | Black |
| Material: | PA66 HS 33% GF |
| Terminals: | See Page 7.6, 800 MAXI Fuse Female |
| Application: | 6 MAXI Fuses |

**B. Part No:** **12077563**

| | |
|---|---|
| Description: | Secondary Lock |
| Color: | Natural |
| Material: | PA66 HS |

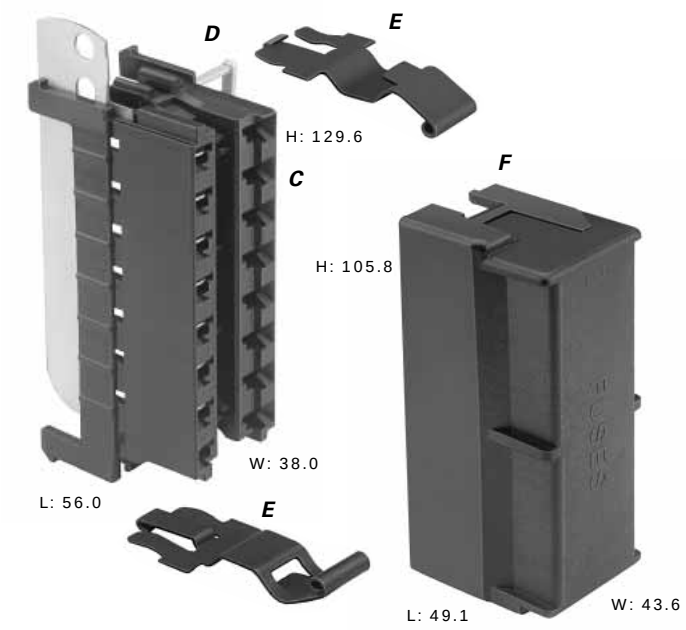


Total Mated Length: 77.5mm

**C. Part No:** **12092231** (Right Battery Feed)
**12092220** (Left Battery Feed. Base Design Req'd.)
**12110415** (w/o Bus Bar)

| | |
|---|---|
| Description: | MAXI Fuse Assembly Module |
| Size: | 56.0L x 129.6H x 38.0W |
| Color: | Black |
| Material: | PA66 HS 33% GF |
| Terminals: | See Page 7.6, 800 MAXI Fuse Female |
| Application: | 8 MAXI Fuses |

**D. Part No:** **12077532**

| | |
|---|---|
| Description: | Secondary Lock |
| Color: | Natural |
| Material: | PA66 HS IM |

**E. Part No:** **15495959**

| | |
|---|---|
| Description: | Latch |
| Number Req: | 2 |
| Color: | Black |
| Material: | 1050 Steel Annealed |

**F. Part No:** **12077538**

| | |
|---|---|
| Description: | Cover |
| Size: | 49.1L x 105.8H x 43.6W |
| Color: | Black |
| Material: | PA66 HS IM 14% GF |

**NOTE:** Specifications in this catalog are for general reference only and are subject to change without notice. To verify product information, please contact a Delphi representative.

# Modular Relay Modules

### A. Part No: 12077571

| | |
|---|---|
| Description: | Relay Module |
| Size: | 50.0L x 86.2H x 38.2W |
| Color: | Black |
| Material: | PA66 HS IM |
| Terminals: | See Page 7.5, 7.6, 480 Metri-Pack Relay and 630 Metri-Pack Female |
| Application: | 6 Micro-Relays (ISO) |

### B. Part No: 12077572

| | |
|---|---|
| Description: | Secondary Lock |
| Number Req: | 2 |
| Color: | Blue |
| Material: | PBT HS IM |

### C. Part No: 15495959

| | |
|---|---|
| Description: | Latch |
| Number Req: | 2 |
| Color: | Black |
| Material: | 1050 Steel Annealed |

### D. Part No: 12160897

| | |
|---|---|
| Description: | Cover |
| Size: | 49.0L x 82.6H x 43.0W |
| Color: | Black |
| Material: | PA6 |

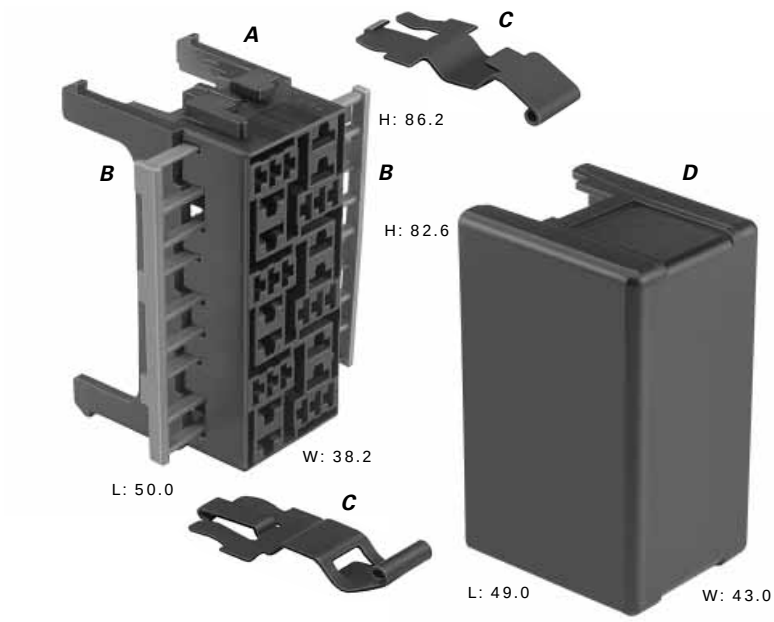


Total Mated Length: 78.2mm

### E. Part No: 15423524

| | |
|---|---|
| Description: | Relay Module |
| Size: | 50.0L x 86.8H x 37.6W |
| Color: | Black |
| Material: | PA66 HS IM |
| Terminals: | See Page 7.5, 630 Metri-Pack Relay |
| Application: | 2 Mini-Relays (ISO) |

### F. Part No: 12033872

| | |
|---|---|
| Description: | TPA |
| Number Req: | 2 |
| Color: | Natural |
| Material: | PA6 |

### G. Part No: 15495959

| | |
|---|---|
| Description: | Latch |
| Number Req: | 2 |
| Color: | Black |
| Material: | 1050 Steel Annealed |

### H. Part No: 12160897

| | |
|---|---|
| Description: | Cover |
| Size: | 49.0L x 82.6H x 43.0W |
| Color: | Black |
| Material: | PA6 |

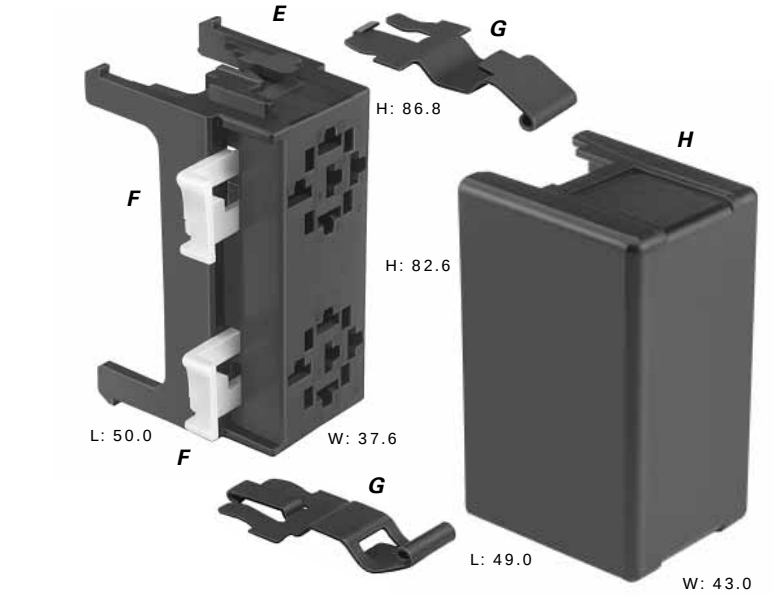


Total Mated Length: 78.2mm

**NOTE:** Specifications in this catalog are for general reference only and are subject to change without notice. To verify product information, please contact a Delphi representative.

# Modular
# Relay Modules

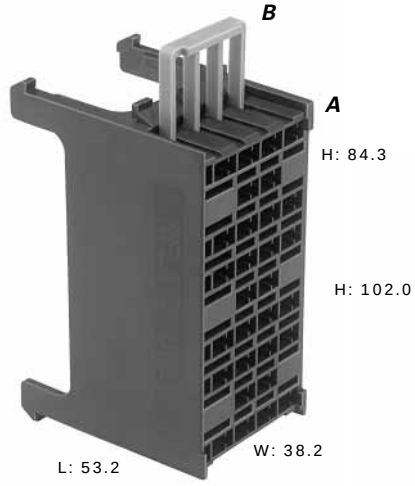

Total Mated Length: 82.1mm

TANGLESS

### A. Part No: 12146836†

| | |
|---|---|
| Description: | Relay Module |
| Size: | 53.2L x 84.3H x 38.2W |
| Color: | Black |
| Material: | PA66 HS IM |
| Terminals: | See Page 7.5, 280 Metri-Pack Tangless |
| Application: | 1 Mini-Relay / 2 Micro-Relays |

### B. Part No: 12146835

| | |
|---|---|
| Description: | Secondary Lock |
| Color: | Blue |
| Material: | PA66 HS IM |

### C. Part No: 15324032

| | |
|---|---|
| Description: | Cover |
| Size: | 53.4L x 102.0H x 45.9W |
| Color: | Black |
| Material: | PA6 |

† Do not use thin stock female terminals with 1.0mm² or larger cable.



**NOTE:** Specifications in this catalog are for general reference only and are subject to change without notice. To verify product information, please contact a Delphi representative.

# Modular
# Hybrid Modules

### A. Part No: 12160504

| | |
|---|---|
| Description: | Hybrid Module |
| Size: | 52.2L x 85.9H x 42.2W |
| Color: | Black |
| Material: | PA66 HS IM 14% GF |
| Terminals: | See Page 7.5, 280 Bus Bar 16.2mm Centerline Tangless |
| Application: | MINI® Fuse, Mini-Relay, Micro-Relay |
| Note: | Mylar overlays available upon request |

### B. Part No: 12160541

| | |
|---|---|
| Description: | Secondary Lock |
| Color: | Blue |
| Material: | PA66 HS IM |

### C. Part No: 15495959

| | |
|---|---|
| Description: | Latch |
| Number Req: | 2 |
| Color: | Black |
| Material: | 1050 Steel Annealed |

### D. Part No: 12160897

| | |
|---|---|
| Description: | Cover |
| Size: | 49.0L x 82.6H x 43.0W |
| Color: | Black |
| Material: | PA6 |

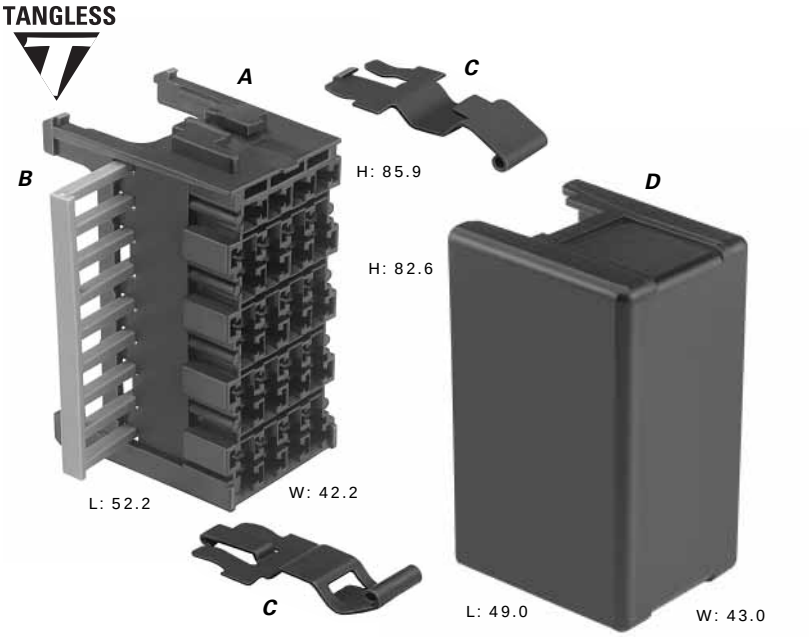


Total Mated Length: 80.4mm

### E. Part No: 12110594

| | |
|---|---|
| Description: | Hybrid Module |
| Size: | 67.3L x 75.5H x 38.2W |
| Color: | Black |
| Material: | PA66 HS IM 14% GF |
| Terminals: | See Page 7.4-7.6, 280 Bus Bar 15.0mm Centerline, 480 Metri-Pack Relay and 630 Metri-Pack Female |
| Application: | 6 MINI® Fuses / 4 Micro-Relays (ISO) |

### F. Part No: 12110595

| | |
|---|---|
| Description: | Secondary Lock |
| Color: | Blue |
| Material: | PA66 HS IM |

### G. Part No: 15495959

| | |
|---|---|
| Description: | Latch |
| Number Req: | 2 |
| Color: | Black |
| Material: | 1050 Steel Annealed |

### H. Part No: 12110602

| | |
|---|---|
| Description: | Cover |
| Size: | 49.0L x 82.6H x 43.0W |
| Color: | Black |
| Material: | PA66 HS IM |

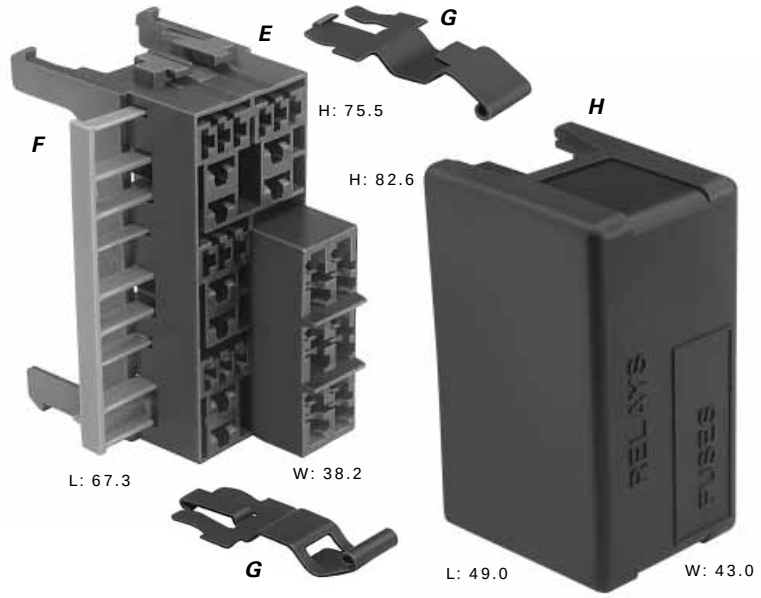


Total Mated Length: 70.3mm

**NOTE:** Specifications in this catalog are for general reference only and are subject to change without notice. To verify product information, please contact a Delphi representative.

# Modular
# Hybrid Modules

TANGLESS

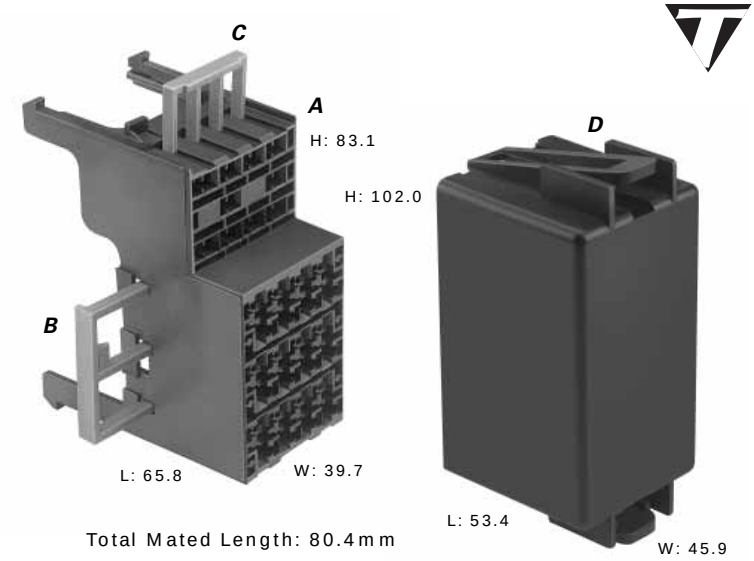


Total Mated Length: 80.4mm

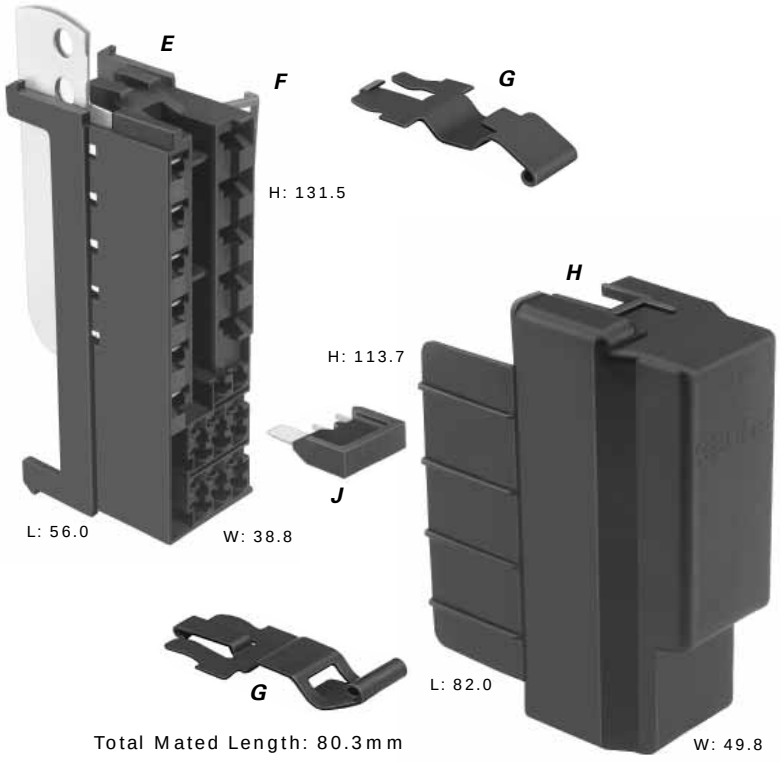


Total Mated Length: 80.3mm

### A. Part No: 12146815

| | |
|---|---|
| Description: | Hybrid Module |
| Size: | 65.8L x 83.1H x 39.7W |
| Color: | Black |
| Material: | PA66 HS IM 14% GF |
| Terminals: | See Page 7.5, 280 Bus Bar 16.2mm Centerline Tangless and 280 Metri-Pack Tangless |
| Application: | 12 MINI® Fuses / 1 Mini-Relay and 2 Micro-Relays |

### B. Part No: 12146816

| | |
|---|---|
| Description: | Secondary Lock |
| Color: | Blue |
| Material: | PA66 HS IM |

### C. Part No: 12146817

| | |
|---|---|
| Description: | Secondary Lock |
| Color: | Blue |
| Material: | PA66 HS IM |

### D. Part No: 15324032

| | |
|---|---|
| Description: | Cover |
| Size: | 53.4L x 102.0H x 45.9W |
| Color: | Black |
| Material: | PA6 |

### E. Part No: 12191848 12191847 (w/o Bus Bar)

| | |
|---|---|
| Description: | Hybrid Assembly Module |
| Size: | 56.0L x 131.5H x 38.8W |
| Color: | Black |
| Material: | PA66 HS IM 14% GF |
| Terminals: | See Page 7.4-7.6, 280 Bus Bar 15.0mm Centerline and 800 MAXI Fuse Female |
| Application: | MINI® Fuse, MAXI™ Fuse, Mini-Relay, Micro-Relay |

### F. Part No: 12191849

| | |
|---|---|
| Description: | Secondary Lock |
| Color: | Blue |
| Material: | PBT |

### G. Part No: 15495959

| | |
|---|---|
| Description: | Latch |
| Number Req: | 2 |
| Color: | Black |
| Material: | 1050 Steel Annealed |

### H. Part No: 15305152

| | |
|---|---|
| Description: | Cover |
| Size: | 82.0L x 113.7H x 49.8W |
| Color: | Black |
| Material: | PP |

### J. Part No: 12160674

| | |
|---|---|
| Description: | Shunt |
| Color: | Black |
| Material: | PA66 HS IM |
| Note: | Provides Bussing to MINI® Fuses from MAXI™ Fuses |

**NOTE:** Specifications in this catalog are for general reference only and are subject to change without notice. To verify product information, please contact a Delphi representative.

# Modular

## Electrical Center Base Application Guide

Use this guide to choose the proper base in combining fuse, relay, and hybrid module assemblies.

| | | Fuse Modules | | | | Relay Modules | | | Hybrid Modules | | | |
|---|---|---|---|---|---|---|---|---|---|---|---|---|
| | | Mini® Fuse | | Maxi™ Fuse | | | | | (Fuses & Relays) | | | |
| | BASE STYLE | 12191544 | 12177145 | 12110129<br>12077569<br>12160829 | 12092231<br>12110415 | 12077571 | 15423524 | 12146836 | 12160504 | 12110594 | 12191847<br>12146815 | 12191848 |
| | | Page 7.8 | Page 7.8 | Page 7.9 | Page 7.9 | Page 7.10 | Page 7.10 | Page 7.11 | Page 7.12 | Page 7.12 | Page 7.13 | Page 7.13 |
| A | 12084910 (1 Way) | ■ | | | | ■ | ■ | ■ | ■ | ■ | ■ | |
| B | 12191497 (1 Way) | | ■ | | | | | | | | | |
| C | 12077534 (1 Way w/ Battery Feed) | | | | ■ | | | | | | | ■ |
| D | 12092741 (3 Way) | ■ | | | | ■ | ■ | ■ | ■ | ■ | ■ | |
| E | 12092328 (3 Way w/ Battery Feed) | ■ | | ■ | | ■ | ■ | ■ | ■ | ■ | ■ | |
| F | 12129121 (4 Way w/ Battery Feed) | ■ | | ■ | | ■ | ■ | ■ | ■ | ■ | ■ | |
| G* | 12110041 (4 Way) | ■ | ■ | | | ■ | ■ | ■ | ■ | ■ | ■ | |

*Note: 1 MINI Fuse Module (12177145) and a combination of 3 other modules.

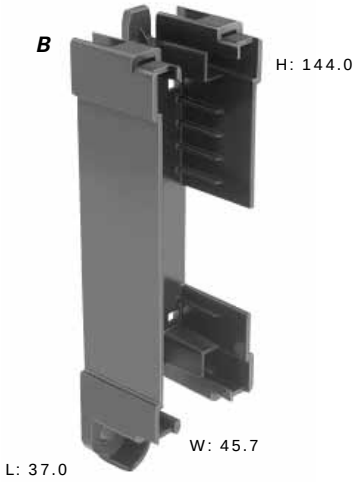


**A. Part No: 12084910**

| | |
|---|---|
| Description: | 1 Way Electrical Center Base |
| Size: | 35.7L x 118.5H x 47.2W |
| Color: | Black |
| Material: | PA6 |
| Application: | 1 Module |

**B. Part No: 12191497**

| | |
|---|---|
| Description: | 1 Way Electrical Center Base |
| Size: | 37.0L x 144.0H x 45.7W |
| Color: | Black |
| Material: | PA6 |
| Application: | 1 Module |

**NOTE:** Specifications in this catalog are for general reference only and are subject to change without notice. To verify product information, please contact a Delphi representative.

# Modular

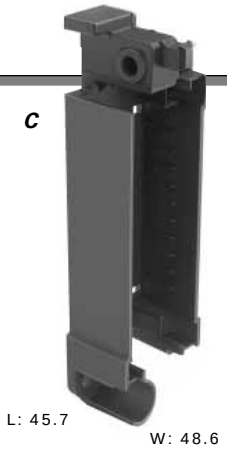


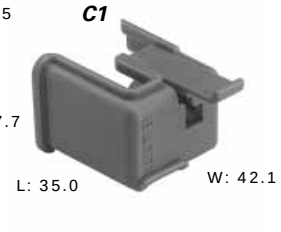


Total Mated Length: 80.3mm

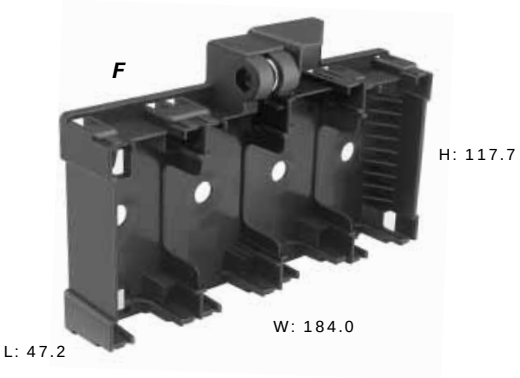


### C. Part No: 12077534

| | |
|---|---|
| Description: | 1 Way Electrical Center Base Assembly |
| Size: | 45.7L x 162.5H x 48.6W |
| Color: | Black |
| Material: | PA6 |
| Application: | 1 Module (w/ Battery Feed) |

### C1. Part No: 12092332 (Horizontal Wire Feed) 12092669 (Vertical Wire Feed)

| | |
|---|---|
| Description: | Battery Terminal Cover |
| Size: | 35.0L x 27.7H x 42.1W |
| Color: | Red |
| Material: | PA6 |

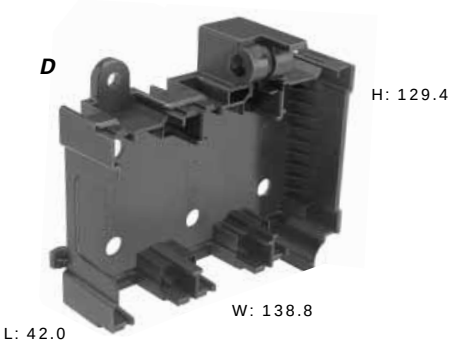


### D. Part No: 12092741

| | |
|---|---|
| Description: | 3 Way Electrical Center Base |
| Size: | 42.0L x 129.4H x 138.8W |
| Color: | Black |
| Material: | PA6 |
| Application: | 3 Modules |

### E. Part No: 12092328

| | |
|---|---|
| Description: | 3 Way Electrical Center Base Assembly |
| Size: | 42.0L x 129.4H x 138.8W |
| Color: | Black |
| Material: | PA6 |
| Application: | 3 Modules (w/ Battery Feed) |

### F. Part No: 12129121

| | |
|---|---|
| Description: | 4 Way Electrical Center Base Assembly |
| Size: | 47.2L x 117.7H x 184.0W |
| Color: | Black |
| Material: | PA6 |
| Application: | 4 Modules (w/ Battery Feed) |

### G. Part No: 12110041

| | |
|---|---|
| Description: | 4 Way Electrical Center Base |
| Size: | 34.9L x 122.8H x 224.4W |
| Color: | Black |
| Material: | PA6 |
| Application: | 1 MINI Fuse Module (12177145) and a combination of 3 other modules |

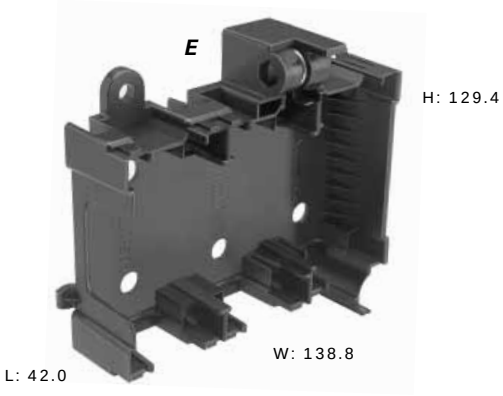


**NOTE:** Specifications in this catalog are for general reference only and are subject to change without notice. To verify product information, please contact a Delphi representative.

# Traditional

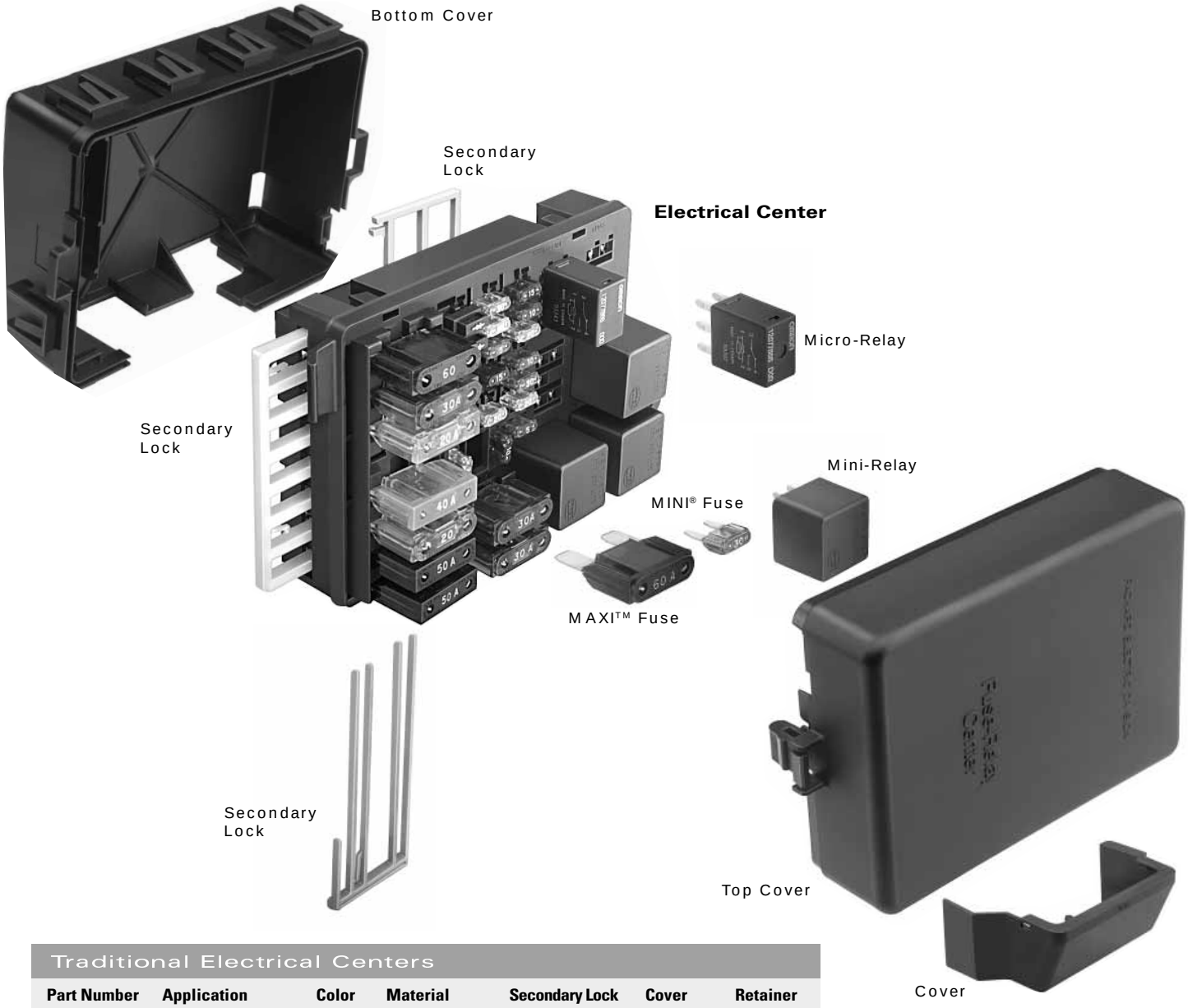


## Traditional Electrical Centers

| Part Number | Application | Color | Material | Secondary Lock | Cover | Retainer |
|---|---|---|---|---|---|---|
| 12129833 | 12 MINI® Fuses,<br>14 Relays | Black | PA66 HS IM | 12129835<br>12129834<br>12129836<br>12129837 | 12160906<br>12160277 | |
| 15358661 | 28 MINI® Fuses<br>1 Relay<br>2 Circuit Breakers | Black | PA66 HS IM 14%GF | 12160677<br>12160678<br>12160679 | | 12092748 |
| 12146281 | 10 MAXI™ Fuses<br>16 MINI® Fuses<br>Micro-Relays<br>Mini-Relays<br>2 Diodes | Black | PA66 HS IM | 12146805<br>12146284<br>12077532<br>12146283 | 12146286<br>12162365<br>12160765 | |

### SECTION NOTES:

Contact your regional support representative for assistance in selecting the appropriate Electrical Center to meet your need.

- Circuit breakers, fuses and diodes may be purchased directly from the manufacturer.

**NOTE:** Specifications in this catalog are for general reference only and are subject to change without notice. To verify product information, please contact a Delphi representative.

# Traditional

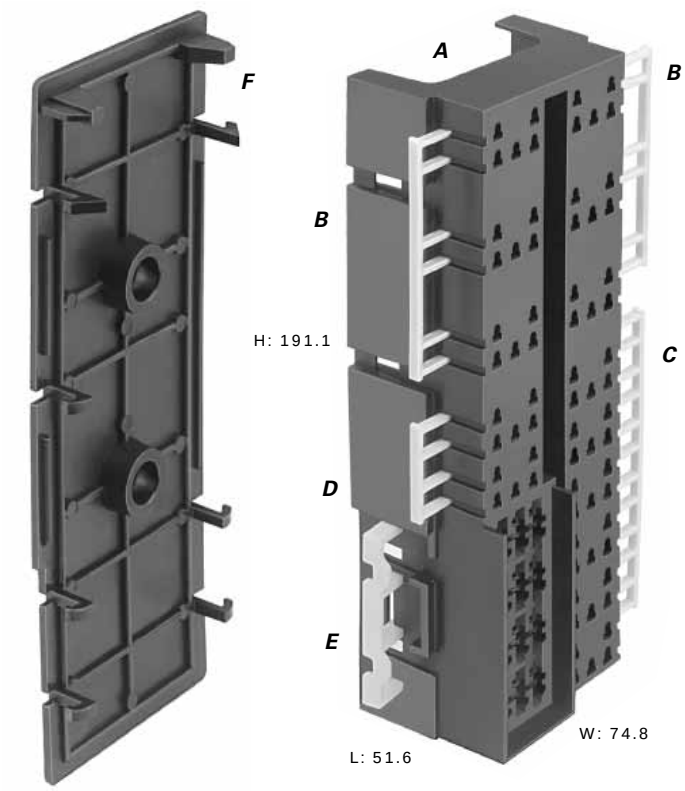


Total Mated Length: 54.3mm

### A. Part No: 12129833

| | |
|---|---|
| Description: | Convenience Center |
| Size: | 51.6L x 191.1H x 74.8W |
| Color: | Black |
| Material: | PA66 HS IM |
| Terminals: | See Page 7.4 |
| Applications: | 12 MINI® Fuses, 14 Relays |
| Note: | 12160277 Shipping Cover available. |

### B. Part No: 12129835

| | |
|---|---|
| Description: | Secondary Lock |
| Color: | Natural |
| Number Req: | 2 |
| Material: | PBT |

### C. Part No: 12129834

| | |
|---|---|
| Description: | Secondary Lock |
| Color: | Natural |
| Material: | PBT |

### D. Part No: 12129836

| | |
|---|---|
| Description: | Secondary Lock |
| Color: | Natural |
| Material: | PBT |

### E. Part No: 12129837

| | |
|---|---|
| Description: | Secondary Lock |
| Color: | Natural |
| Material: | PBT |

### F. Part No: 12160906

| | |
|---|---|
| Description: | Cover |
| Color: | Black |
| Material: | PA66 HS IM |

**KEY:**

**B** – 280 Metri-Pack Bus Bar 16.2mm Centerline

**F** – 280 Metri-Pack

Traditional Electrical Centers feature a combination of different terminal cavities, as indicated by the Key.

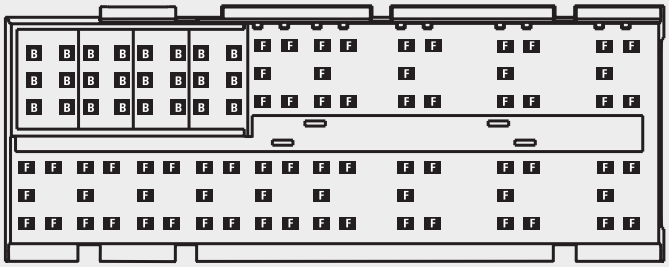

**NOTE:** Specifications in this catalog are for general reference only and are subject to change without notice. To verify product information, please contact a Delphi representative.

# Traditional

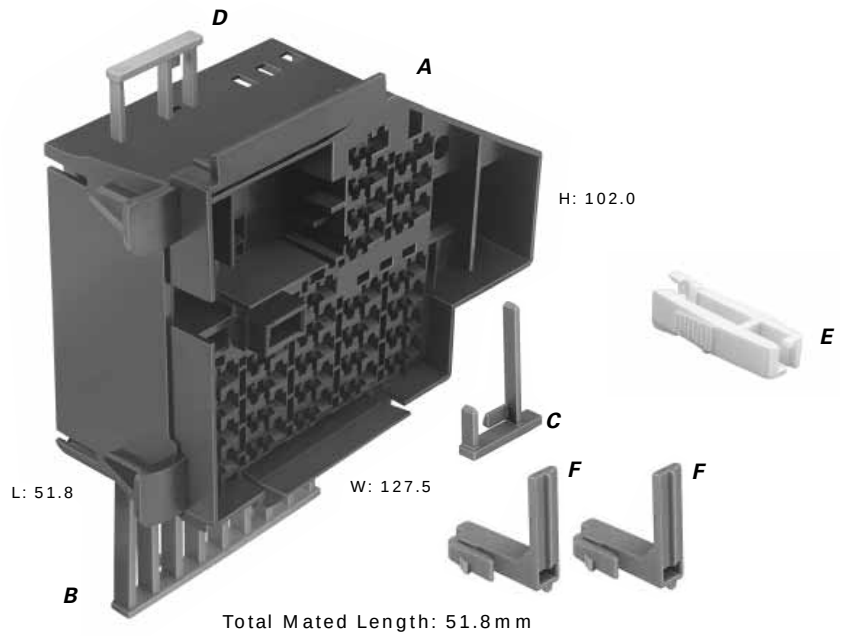


### A. Part No: 15358661

| | |
|---|---|
| Description: | Fuseblock |
| Size: | 51.8L x 102.0H x 127.5W |
| Color: | Black |
| Material: | PA66 HS IM 14% GF |
| Terminals: | See Page 7.4 |
| Applications: | 28 MINI® Fuses, 1 Relay, 2 Circuit Breakers |

### B. Part No: 12160677

| | |
|---|---|
| Description: | Secondary Lock |
| Color: | Blue |
| Material: | PBT |

### C. Part No: 12160678

| | |
|---|---|
| Description: | Secondary Lock |
| Color: | Blue |
| Material: | PBT |

### D. Part No: 12160679

| | |
|---|---|
| Description: | Secondary Lock |
| Color: | Blue |
| Material: | PBT |

### E. Part No: 12084791

| | |
|---|---|
| Description: | Fuse Extractor |
| Color: | White |
| Material: | PA66 |

### F. Part No: 12092748

| | |
|---|---|
| Description: | Device Position Assurance |
| Number Req: | 2 |
| Color: | Red |
| Material: | PP |

**KEY:**

**B** – 280 Metri-Pack Bus Bar 16.2mm Centerline
**C** – 280 Metri-Pack Bus Bar 15.0mm Centerline
**F** – 280 Metri-Pack

Traditional Electrical Centers feature a combination of different terminal cavities, as indicated by the Key.

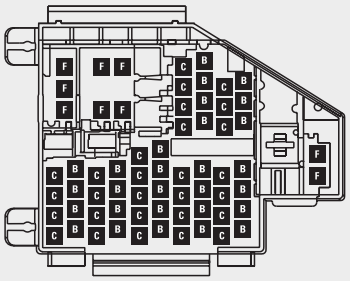

**NOTE:** Specifications in this catalog are for general reference only and are subject to change without notice. To verify product information, please contact a Delphi representative.

# Traditional

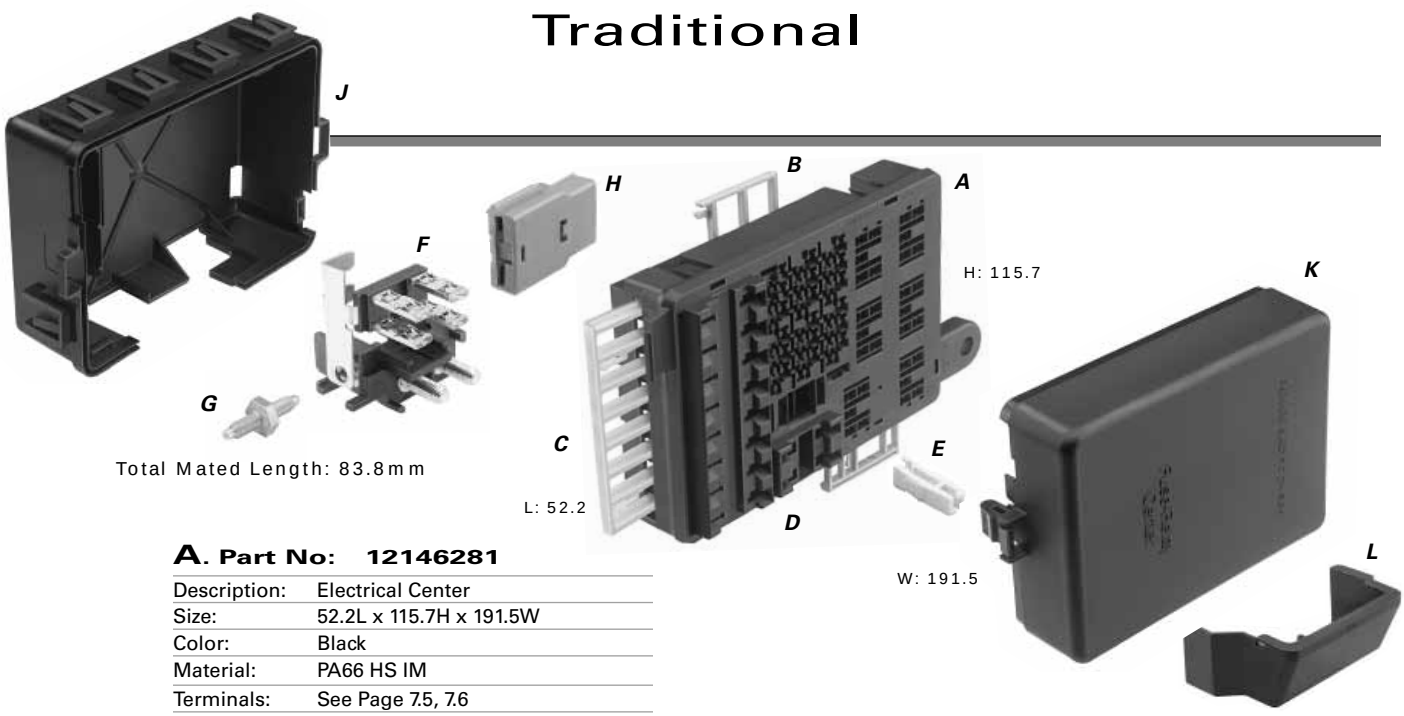


### A. Part No: 12146281

| | |
|---|---|
| Description: | Electrical Center |
| Size: | 52.2L x 115.7H x 191.5W |
| Color: | Black |
| Material: | PA66 HS IM |
| Terminals: | See Page 7.5, 7.6 |
| Applications: | 10 MAXI™ Fuses, 16 MINI® Fuses, 2 Diodes, Micro-Relays, Mini-Relays |

### B. Part No: 12146284

| | |
|---|---|
| Description: | Secondary Lock |
| Color: | Gray |
| Material: | PBT |

### C. Part No: 12077532

| | |
|---|---|
| Description: | Secondary Lock |
| Color: | Natural |
| Material: | PA66 HS IM |

### D. Part No: 12146283

| | |
|---|---|
| Description: | Secondary Lock |
| Color: | Gray |
| Material: | PBT |

### E. Part No: 12084791

| | |
|---|---|
| Description: | Fuse Extractor |
| Color: | White |
| Material: | PA66 |

### F. Part No: 15492611

| | |
|---|---|
| Description: | Bus Stud Terminal Assembly |
| Color: | Black |
| Material: | PA66 HS IM 14% GF |
| Terminals: | See Page 7.6, M8 Ring |

### G. Part No: 12160759

| | |
|---|---|
| Description: | Bolt |
| Material: | Steel |
| Terminals: | See Page 7.6, M6 Ring |

### H. Part No: 12146805

| | |
|---|---|
| Description: | Secondary Lock |
| Color: | Gray |
| Material: | PP |

### J. Part No: 12146286

| | |
|---|---|
| Description: | Bottom Cover |
| Color: | Black |
| Material: | PA66 HS IM |
| Note: | Cover will accept 6 external relays. |

### K. Part No: 12162365

| | |
|---|---|
| Description: | Top Cover |
| Color: | Black |
| Material: | PA66 HS IM |

### L. Part No: 12160765

| | |
|---|---|
| Description: | Bus Stud Assembly Cover |
| Color: | Black |
| Material: | PP IM |

**KEY:**

- **A** – 280 Metri-Pack Bus Bar 16.2 Centerline Tangless
- **D** – 280 Metri-Pack Tangless
- – 800 MAXI Fuse Bus Bar
- – 800 MAXI™ Fuse
- – Spare MINI® Fuse Cavity

Traditional Electrical Centers feature a combination of different terminal cavities, as indicated by the Key.

- To assemble this electrical system, informational drawing 12146337 is available.

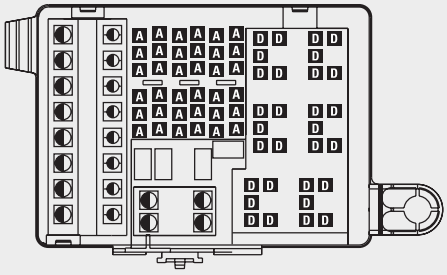

**NOTE:** Specifications in this catalog are for general reference only and are subject to change without notice. To verify product information, please contact a Delphi representative.

# Traditional

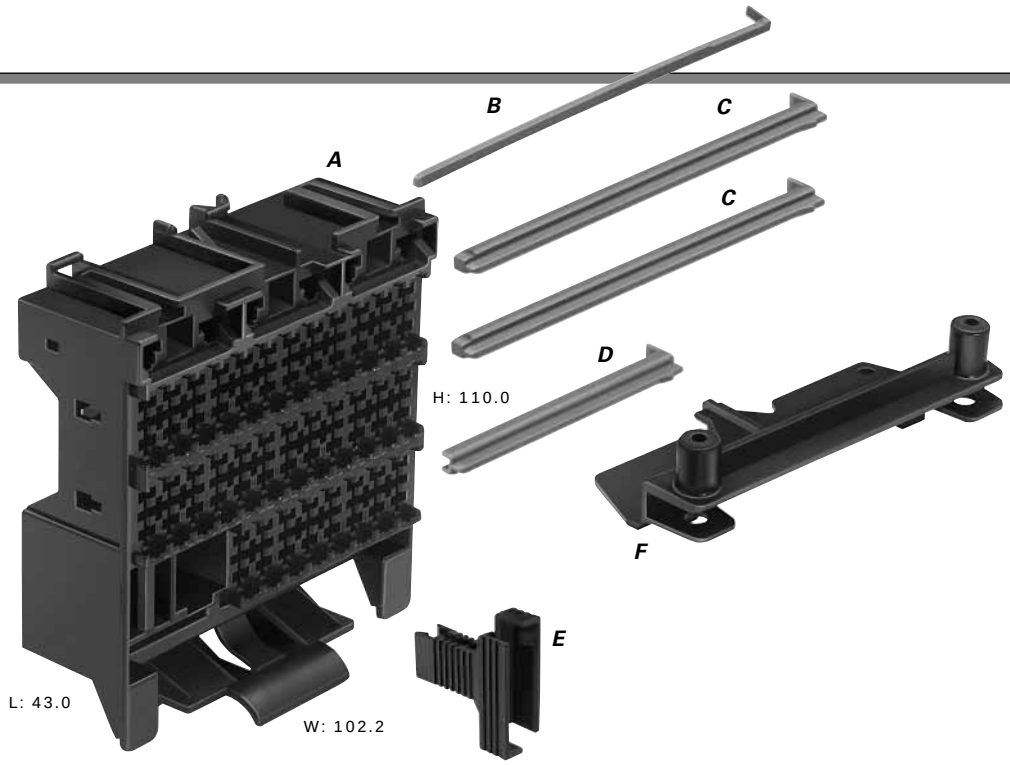


Total Mated Length: 60.0mm

### A. Part No: 10740483

| | |
|---|---|
| Description: | Fuseblock |
| Size: | 43.0L x 110.0H x 102.2W |
| Color: | Black |
| Material: | PA66 HS |
| Terminals: | See Page 7.7 |
| Applications: | 32 ATO® Fuses, 3 MAXI™ Fuses |

### B. Part No: 10740484

| | |
|---|---|
| Description: | Secondary Lock |
| Color: | Gray |
| Material: | PA6 15% GF |

### C. Part No: 10717812

| | |
|---|---|
| Description: | Secondary Lock |
| Number Req: | 2 |
| Color: | Gray |
| Material: | PA6 15% GF |

### D. Part No: 10740485

| | |
|---|---|
| Description: | Secondary Lock |
| Color: | Gray |
| Material: | PA6 15% GF |

### E. Part No: 12185643 (Optional)

| | |
|---|---|
| Description: | Fuse Extractor |
| Color: | Black |
| Material: | PA6 |

### F. Part No: 10718038

| | |
|---|---|
| Description: | Hinge |
| Color: | Black |
| Material: | PP |

**KEY:**

▼ 800 Metri-Pack

▲ 6.3 VF

Traditional Electrical Centers feature a combination of different terminal cavities, as indicated by the Key.

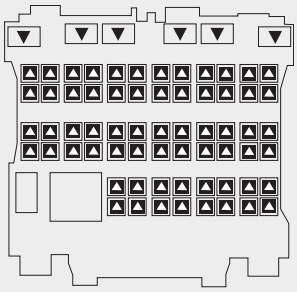

**NOTE:** Specifications in this catalog are for general reference only and are subject to change without notice. To verify product information, please contact a Delphi representative.

# Traditional

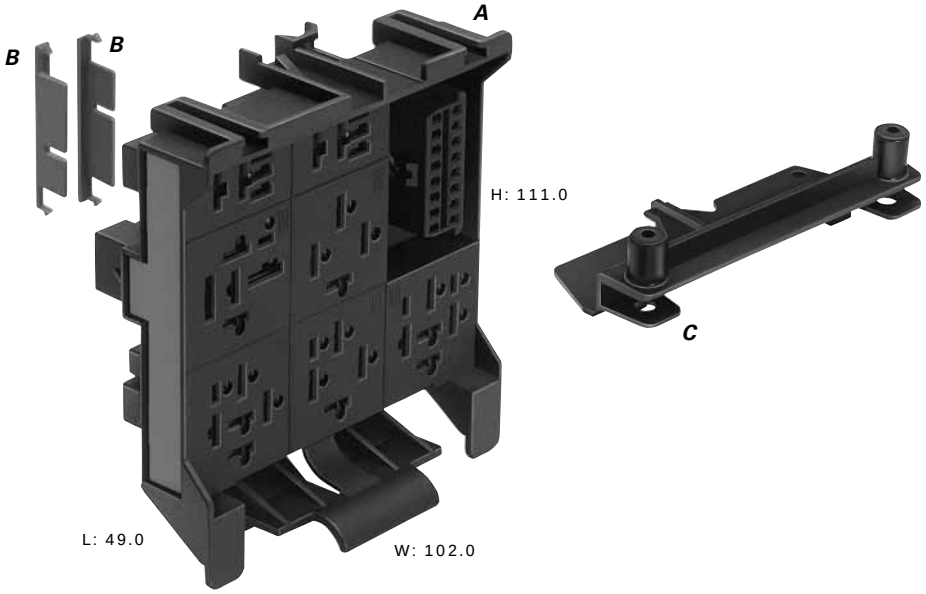


Total Mated Length: 50.0mm

### A. Part No: 10740486

| | |
|---|---|
| Description: | Relay Block |
| Size: | 49.0L x 111.0H x 102.0W |
| Color: | Black |
| Material: | PA6 10% GF 20% GB |
| Terminals: | See Page 7.7 |
| Applications: | 2 Mini-Relays, 4 Standard Relays, 1 Relay, OBD II |

### B. Part No: 10740487

| | |
|---|---|
| Description: | TPA |
| Number req: | 2 |
| Color: | Gray |
| Material: | PA6 15% GF |

### C. Part No: 10718038

| | |
|---|---|
| Description: | Hinge |
| Color: | Black |
| Material: | PP |

**SECTION NOTES:**

- Terminals available from manufacturer.

**KEY:**

- ◪ 150 Metri-Pack
- ■ 280 Metri-Pack
- ▲ 630 Metri-Pack
- ☆ 4.8 Faston
- ★ 6.3 Faston
- ✪ 9.5 Faston

TANGLESS

Traditional Electrical Centers feature a combination of different terminal cavities, as indicated by the Key.

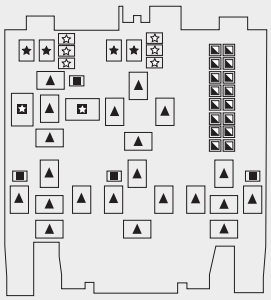

**NOTE:** Specifications in this catalog are for general reference only and are subject to change without notice. To verify product information, please contact a Delphi representative.

# Traditional

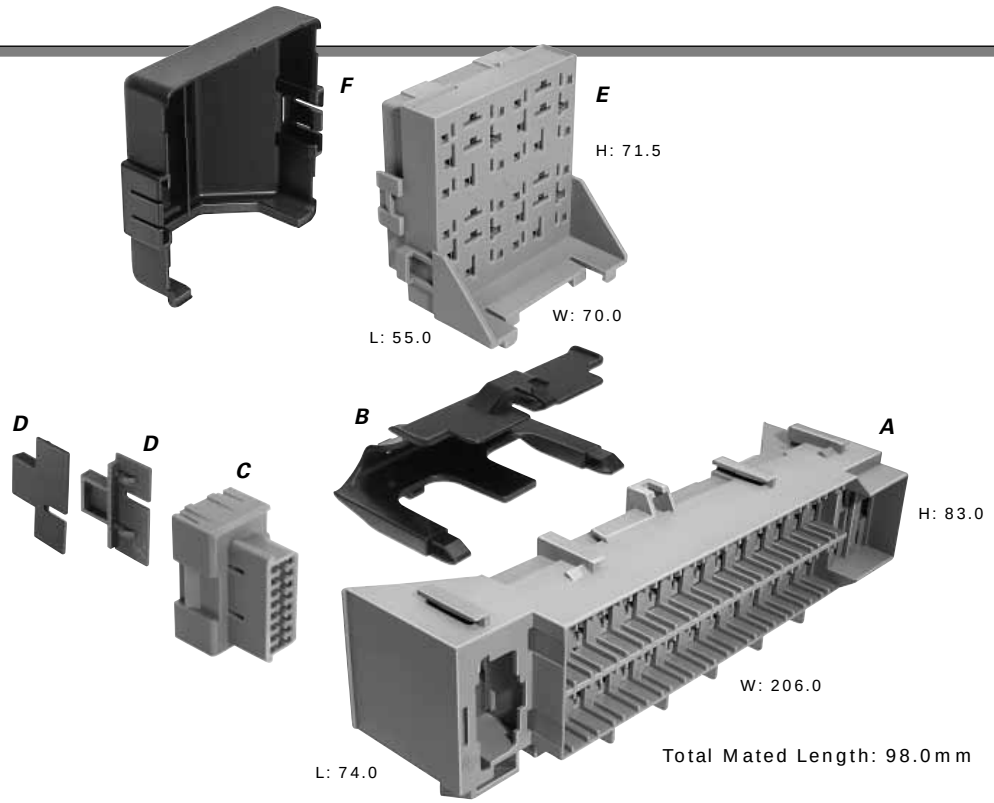


### A. Part No: 10718620

| | |
|---|---|
| Description: | Fuse Module |
| Size: | 74.0L x 83.0H x 206.0W |
| Color: | Gray |
| Material: | PA6 10% GF 20% GB |
| Terminals: | See Page 7.4 |
| Applications: | 26 ATO® Fuses, 2 MAXI™ Fuses |

### B. Part No: 10720018

| | |
|---|---|
| Description: | Cover |
| Color: | Black |
| Material: | ABS |

### C. Part No: 15327645

| | |
|---|---|
| Description: | OBD II Connector 16F |
| Color: | Gray |
| Material: | PA6 |

### D. Part No: 15327646

| | |
|---|---|
| Description: | TPA |
| Number Req: | 2 |
| Color: | Black |
| Material: | PA6 15% GF |

### E. Part No: 10718621

| | |
|---|---|
| Description: | Relay Module |
| Size: | 55.0L x 71.5H x 70.0W |
| Color: | Gray |
| Material: | PA6 10% GF 20% GB |
| Application: | 4 Standard Relays |

### F. Part No: 10720017

| | |
|---|---|
| Description: | Cover |
| Color: | Black |
| Material: | ABS |

**KEY:**

TANGLESS

- ◪ 150 Metri-Pack
- ■ 280 Metri-Pack
- ▲ 630 Metri-Pack
- ▼ 800 Metri-Pack
- ◮ 6.3 VF

Traditional Electrical Centers feature a combination of different terminal cavities, as indicated by the Key.

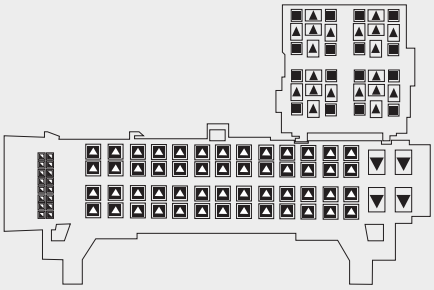

**NOTE:** Specifications in this catalog are for general reference only and are subject to change without notice. To verify product information, please contact a Delphi representative.

# Traditional

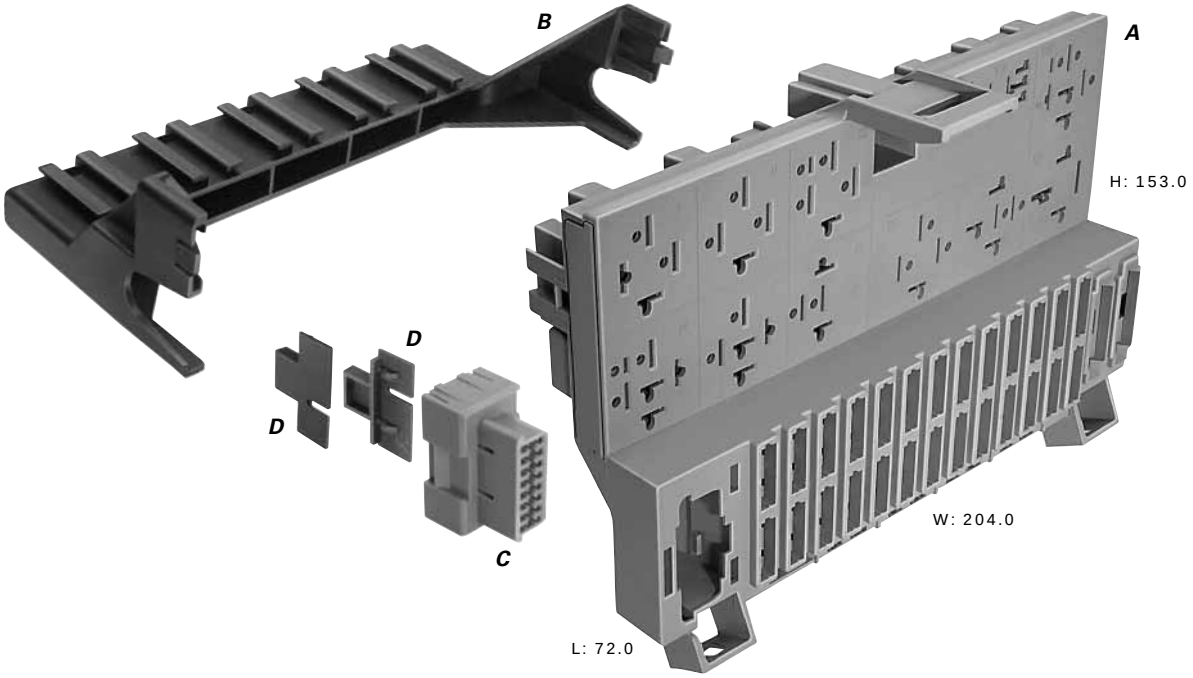


Total Mated Length: 148.0mm

### A. Part No: 15344665

| | |
|---|---|
| Description: | Electrical Center |
| Size: | 72.0L x 153.0H x 204.0W |
| Color: | Gray |
| Material: | PA6 20% GF 10% GB |
| Terminals: | See Page 7.4 |
| Applications: | 26 ATO® Fuses, 2 MAXI™ fuses, 2 Mini-Relays, 9 Standard Relays, 1 Relay |

### B. Part No: 10719976 (Optional)

| | |
|---|---|
| Description: | Holder |
| Color: | Black |
| Material: | PA6 30% GF |
| Applications: | 5 Position Carrier Relay |

### C. Part No: 15327645

| | |
|---|---|
| Description: | OBD II Connector 16F |
| Color: | Gray |
| Material: | PA6 |

### D. Part No: 15327646

| | |
|---|---|
| Description: | TPA |
| Number Req: | 2 |
| Color: | Black |
| Material: | PA6 15% GF |

### SECTION NOTES:

- Terminals available from manufacturer.

**KEY:** TANGLESS

- ◪ 150 Metri-Pack
- ■ 280 Metri-Pack
- ▲ 630 Metri-Pack
- ▼ 800 Metri-Pack
- ◭ 6.3 VF
- ☆ 4.8 Faston
- ★ 6.3 Faston
- ✪ 9.5 Faston

Traditional Electrical Centers feature a combination of different terminal cavities, as indicated by the Key.

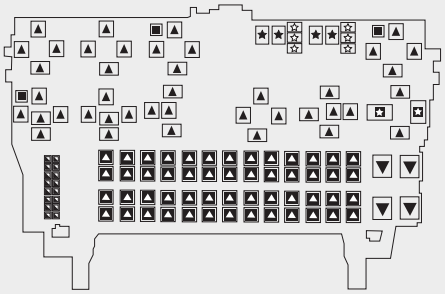

**NOTE:** Specifications in this catalog are for general reference only and are subject to change without notice. To verify product information, please contact a Delphi representative.

# Traditional

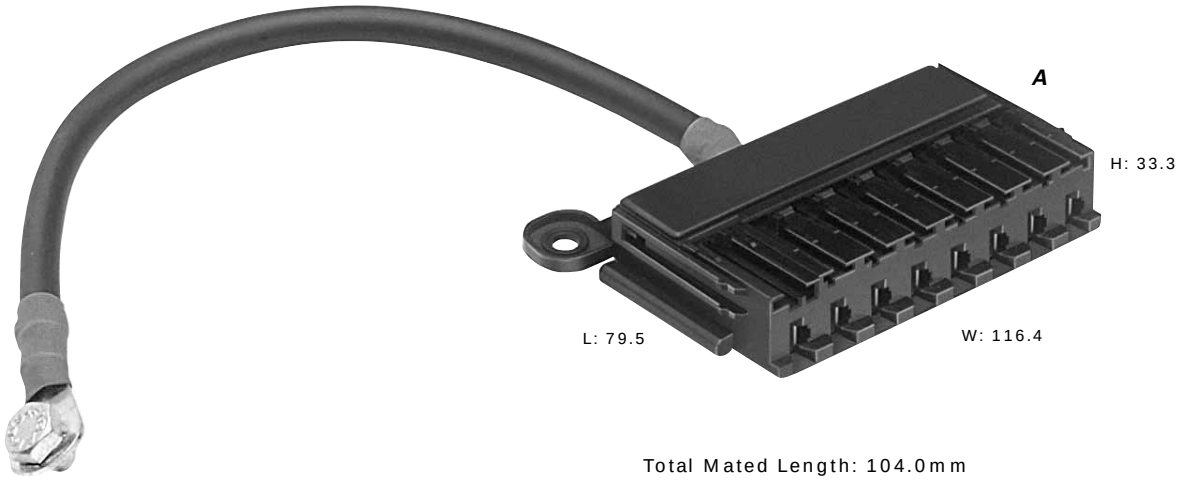


Total Mated Length: 104.0mm

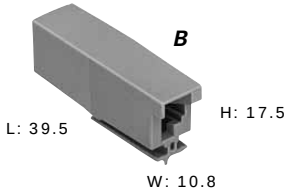


**A. Part No: 15327622**

| | |
|---|---|
| Description: | Module Assembly 8F |
| Size: | 79.5L x 33.3H x 116.4W |
| Color: | Black |
| Material: | PA66 HS IM |

**B. Part No: 15327626**

| | |
|---|---|
| Description: | Connector 1F |
| Size: | 39.5L x 17.5H x 10.8W |
| Color: | Gray |
| Material: | PA66 HS IM |
| Terminals: | See Page 7.6 |
| Application: | 1 MAXI™ Fuse |

**NOTE:** Specifications in this catalog are for general reference only and are subject to change without notice. To verify product information, please contact a Delphi representative.

# Traditional

### C. Part No: 15327625

| | |
|---|---|
| Description: | Connector 1F |
| Size: | 39.5L x 17.5H x 10.8W |
| Color: | Yellow |
| Material: | PA66 HS IM |
| Terminals: | See Page 7.6 |
| Application: | 1 MAXI™ Fuse |

### D. Part No: 15327627

| | |
|---|---|
| Description: | Connector 2F |
| Size: | 39.5L x 17.5H x 22.8W |
| Color: | Blue |
| Material: | PA66 HS IM |
| Terminals: | See Page 7.6 |
| Application: | 2 MAXI™ Fuses |

### E. Part No: 15327628

| | |
|---|---|
| Description: | Connector 3F |
| Size: | 39.5L x 17.5H x 34.7W |
| Color: | Blue |
| Material: | PA66 HS IM |
| Terminals: | See Page 7.6 |
| Application: | 3 MAXI™ Fuses |

### F. Part No: 15327694

| | |
|---|---|
| Description: | Cover |
| Color: | Black |
| Material: | PA66 HS 15% GF |

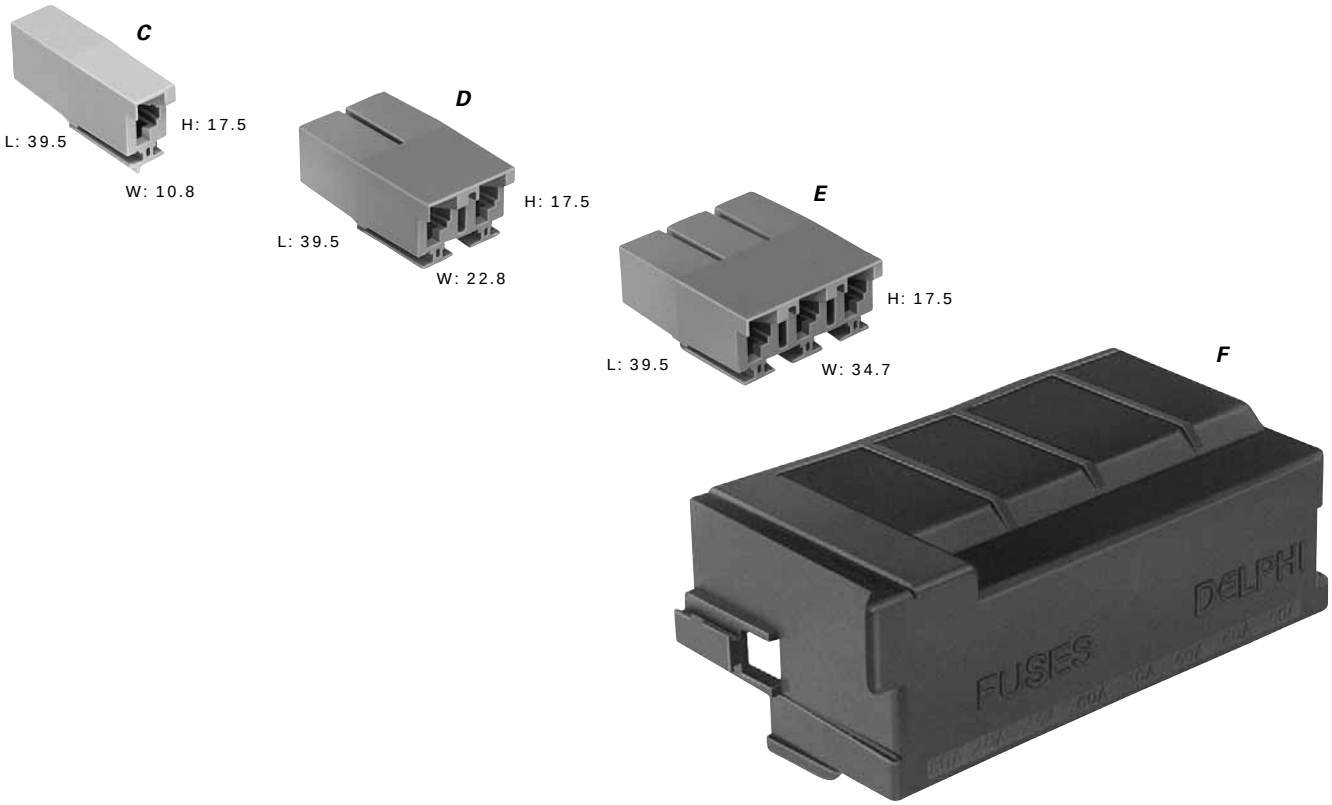


**NOTE:** Specifications in this catalog are for general reference only and are subject to change without notice. To verify product information, please contact a Delphi representative.

# Device Connections

TANGLESS

### A. Part No: 12110541† (Black)
### 12129715† (Md. Gray)

| | |
|---|---|
| Description: | 280 Metri-Pack Connector 6F |
| Size: | 27.3L x 40.2H x 28.6W |
| Material: | PA66 HS IM |
| Terminals: | See Page 7.5, 280 Metri-Pack Tangless |
| Application: | Relay |

### B. Part No: 12110542

| | |
|---|---|
| Description: | Secondary Lock |
| Color: | Md. Gray |
| Material: | PA66 HS IM |

### C. Part No: 12052834

| | |
|---|---|
| Description: | CPA |
| Color: | Green |
| Material: | PP |

† Do not use thin stock female terminals with 1.0mm$^2$ or larger cable.

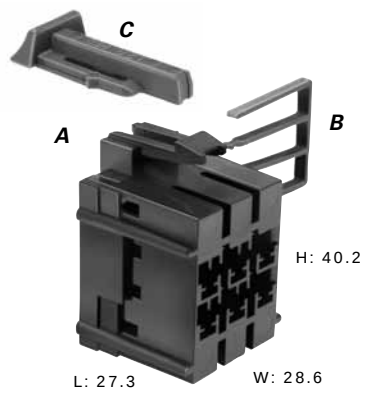


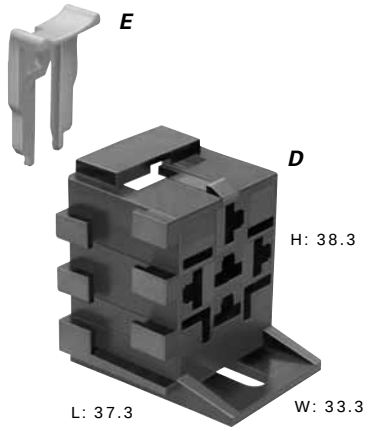


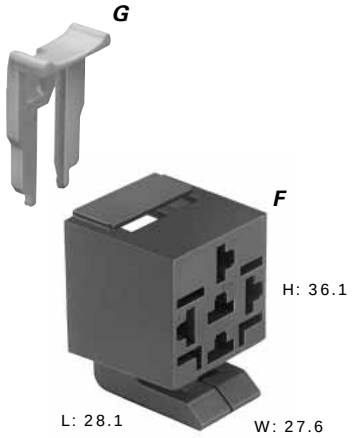


### D. Part No: 12033871

| | |
|---|---|
| Description: | 630 Metri-Pack Connector 5F |
| Size: | 37.3L x 38.3H x 33.3W |
| Color: | Black |
| Material: | PA6 |
| Terminals: | See Page 7.5, 630 Metri-Pack Relay Series |
| Application: | Relay (ISO) |
| Note: | Interlocking multiple connectors form a Relay module. |

### E. Part No: 12033872

| | |
|---|---|
| Description: | TPA |
| Color: | Natural |
| Material: | PA6 |

### F. Part No: 12034003

| | |
|---|---|
| Description: | 630 Metri-Pack Connector 5F |
| Size: | 28.1L x 36.1H x 27.6W |
| Color: | Black |
| Material: | PA6 |
| Terminals: | See Page 7.5, 630 Metri-Pack Relay Series |
| Application: | Relay (ISO) |

### G. Part No: 12033872

| | |
|---|---|
| Description: | TPA |
| Color: | Natural |
| Material: | PA6 |

**NOTE:** Specifications in this catalog are for general reference only and are subject to change without notice. To verify product information, please contact a Delphi representative.

# Device Connections

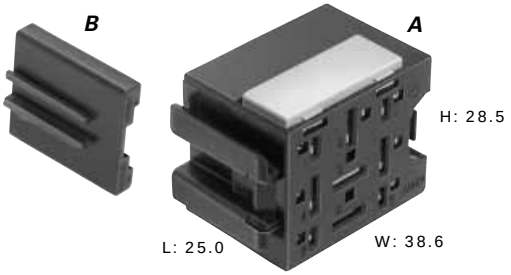


**A. Part No: 12131317**

| | |
|---|---|
| Description: | 280/630 Metri-Pack Mixed Connector 9F |
| Size: | 25.0L x 28.5H x 38.6W |
| Color: | Black |
| Material: | PA6 15% GF |
| Terminals: | See Page 7.5, 630 Metri-Pack, 280 MP Relay Series |
| Application: | Standard Relay Socket |

**B. Part No: 10719968 (Optional)**

| | |
|---|---|
| Description: | Clip Adapter |
| Color: | Black |
| Material: | PA6 |

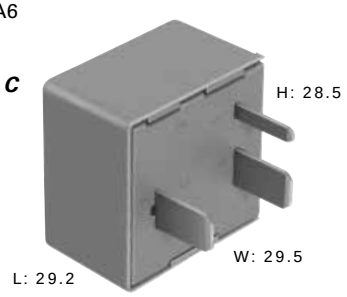


**C. Part No: 10740407 (Gray)**
**10719332 (Blue)**
**10740408 (Brown)**
**10740410 (Black)**

| | |
|---|---|
| Description: | Standard Bridging Relay |
| Size: | 29.2L x 28.5H x 29.5W |
| Blade Size: | 2.8, 6.3mm |
| Material: | PA6 15% GF |

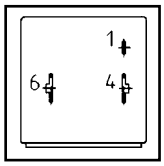


10740407

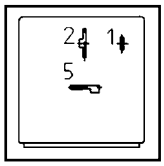


10719332

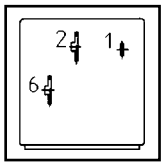


10740408

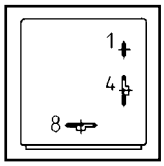


10740410

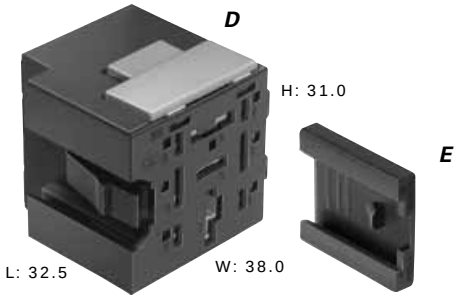


**D. Part No: 12162998**

| | |
|---|---|
| Description: | 280/630 M/P 9.5 Faston Connector Assembly 9F |
| Size: | 32.5L x 31.0H x 38.0W |
| Color: | Black |
| Material: | PA6 15% GF |
| Terminals: | See Page 7.5, 630 Metri-Pack, 280 MP Relay Series |
| Application: | Power Relay Socket |

**E. Part No: 10719968 (Optional)**

| | |
|---|---|
| Description: | Clip Adapter |
| Color: | Black |
| Material: | PA6 |

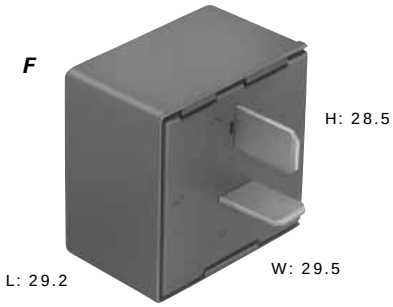


**F. Part No: 10740409 (Green)**

| | |
|---|---|
| Description: | Power Bridging Relay |
| Size: | 29.2L x 28.5H x 29.5W |
| Blade Size: | 9.5mm |
| Material: | PA6 15% GF |

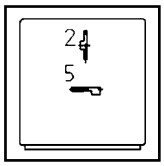


10720098

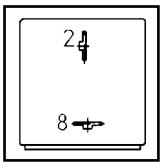


10740409

**NOTE:** Specifications in this catalog are for general reference only and are subject to change without notice. To verify product information, please contact a Delphi representative.

# Device Connections

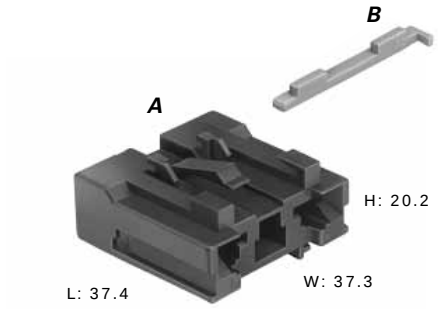


### A. Part No: 12110057

| | |
|---|---|
| Description: | 800 MAXI™ Fuse Connector 2F |
| Size: | 37.4L x 20.2H x 37.3W |
| Color: | Black |
| Material: | PA66 |
| Terminals: | See Page 7.6, 800 MAXI™ Fuse |
| Application: | 1 MAXI™ Fuse |
| Note: | Interlocking multiple connectors form a MAXI Fuse module. |

### B. Part No: 12110058

| | |
|---|---|
| Description: | Secondary Lock |
| Color: | Yellow |
| Material: | PA66 |

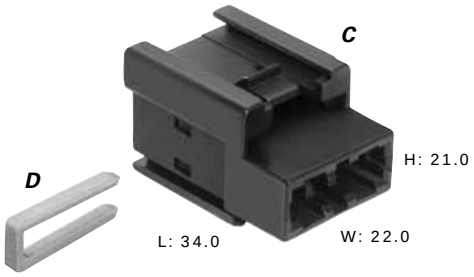


### C. Part No: 12147079

| | |
|---|---|
| Description: | ATO® Fuse Connector 2F |
| Size: | 34.0L x 21.0H x 22.0W |
| Color: | Black |
| Material: | PA6 |
| Terminals: | See Page 7.7, 800 MAXI™ Fuse, |
| Application: | 1 ATO® Fuse |

### D. Part No: 12131359

| | |
|---|---|
| Description: | Secondary Lock |
| Color: | Yellow |
| Material: | PA66 25% GF |

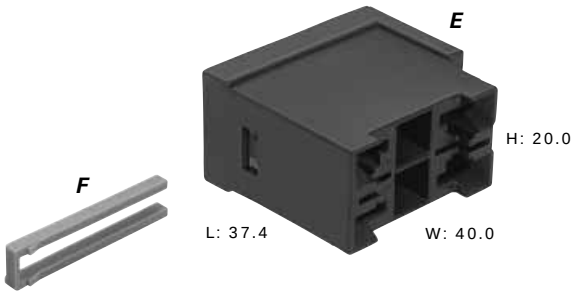


### E. Part No: 15339818

| | |
|---|---|
| Description: | 800 MAXI™ Fuse Connector 4F |
| Size: | 37.4L x 22.0H x 40.0W |
| Color: | Black |
| Material: | PA66 |
| Terminals: | See Page 7.6, 800 MAXI™ Fuse |
| Application: | 2 MAXI™ Fuses |

### F. Part No: 15337249

| | |
|---|---|
| Description: | Secondary Lock |
| Color: | Gray |
| Material: | PA6 30% GF |

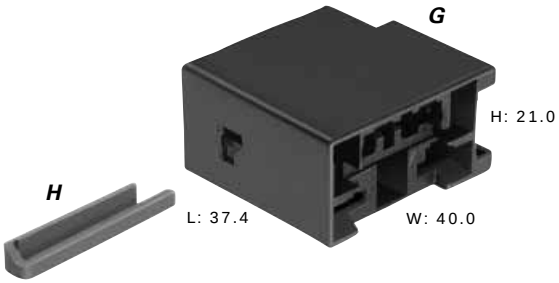


### G. Part No: 12158100

| | |
|---|---|
| Description: | MAXI™/ATO Fuse Connector 4F |
| Size: | 37.4L x 21.0H x 40.0W |
| Color: | Black |
| Material: | PA66 |
| Terminals: | See Page 7.7, 800 MAXI™ Fuse, |
| Application: | 1 MAXI™ Fuse, 1 ATO Fuse |

### H. Part No: 12158101

| | |
|---|---|
| Description: | Secondary Lock |
| Color: | Gray |
| Material: | PA6 30% GF |

**NOTE:** Specifications in this catalog are for general reference only and are subject to change without notice. To verify product information, please contact a Delphi representative.

# Device Connections

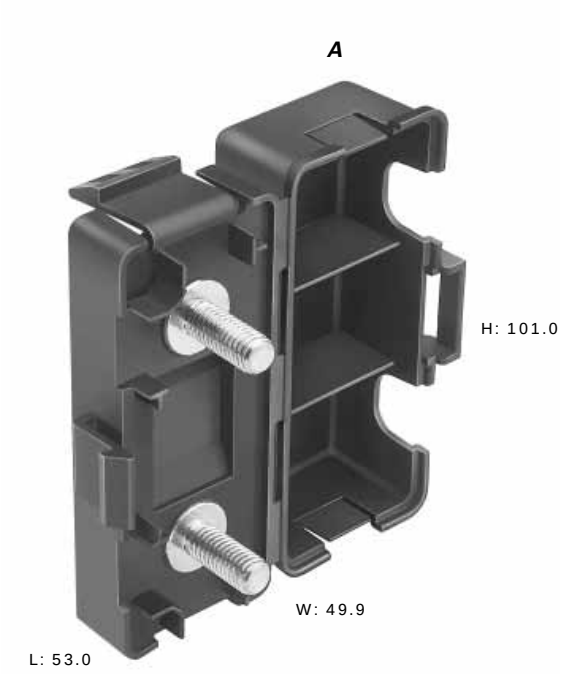


**A. Part No: 15492654**

| | |
|---|---|
| Description: | Connector (MEGA® Fuse) |
| Size: | 53.0L x 101.0H x 49.9W |
| Color: | Black |
| Material: | PP IM |
| Terminals: | See Page 7.6, M8 Ring |
| Application: | 1 MEGA® Fuse (100 - 200 AMPS) |
| Note: | Bolt thread size M8 x 1.25. |



**NOTE:** Specifications in this catalog are for general reference only and are subject to change without notice. To verify product information, please contact a Delphi representative.

# Device Connections

TANGLESS

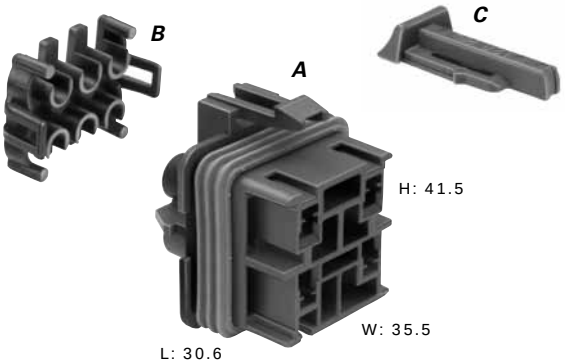


### A. Part No: 12129716†

| | |
|---|---|
| Description: | 280 Metri-Pack Connector Assembly 4F |
| Size: | 30.6L x 41.5H x 35.5W |
| Color: | Md. Gray |
| Material: | PA66 HS IM |
| Terminals: | See Page 7.7, 280 Metri-Pack Tangless Sealed |
| Seals/Plugs: | See Page 7.7 |
| Application: | Relay |

### B. Part No: 12110540

| | |
|---|---|
| Description: | TPA |
| Color: | Dk. Green |
| Material: | PA6 |

### C. Part No: 12052834

| | |
|---|---|
| Description: | CPA |
| Color: | Green |
| Material: | PP |

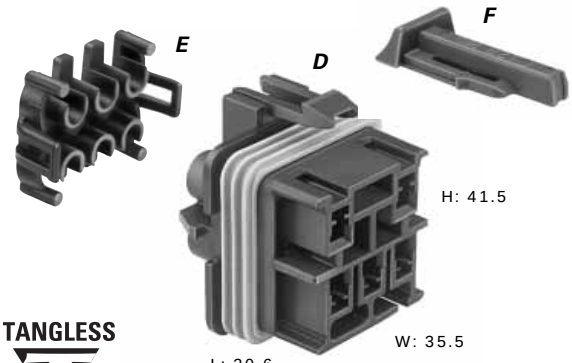


TANGLESS

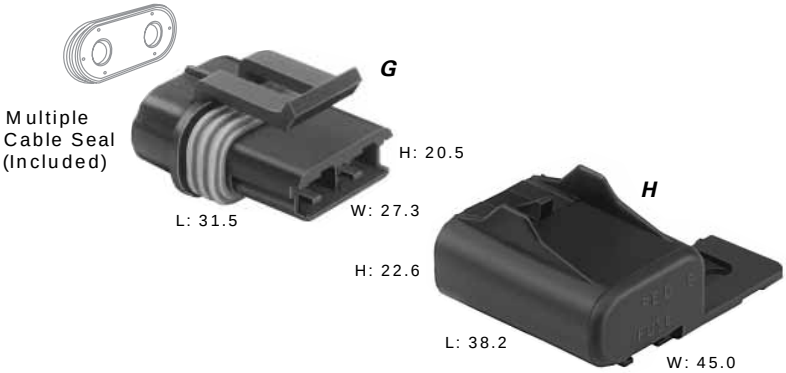


### D. Part No: 12110539†

| | |
|---|---|
| Description: | 280 Metri-Pack Connector Assembly 5F |
| Size: | 30.6L x 41.5H x 35.5W |
| Color: | Black |
| Material: | PA66 HS IM |
| Terminals: | See Page 7.7, 280 Metri-Pack Tangless Sealed |
| Seals/Plugs: | See Page 7.7 |
| Application: | Relay |

### E. Part No: 12110540

| | |
|---|---|
| Description: | TPA |
| Color: | Dk. Green |
| Material: | PA6 |

### F. Part No: 12052834

| | |
|---|---|
| Description: | CPA |
| Color: | Green |
| Material: | PP |

† Do not use thin stock female terminals with 1.0mm$^2$ or larger cable.

### G. Part No: 12085030 (Black/Lt. Orange Seal)
4.48-3.72 Cable O.D.
**12033769 (Black/Green Seal)**
3.65-2.89 Cable O.D.
**12103172 (Gray/Green Seal)**
3.65-2.89 Cable O.D.
**12066681** (Black/Lt. Gray Seal)
2.64-1.90 Cable O.D.

| | |
|---|---|
| Description: | 630 Pull-To-Seat Connector Assembly 2F |
| Size: | 31.5L x 20.5H x 27.3W |
| Material: | PA66 HS IM |
| Terminals: | See Page 7.7, 630 Metri-Pack Pull-To-Seat |
| Application: | 1 ATO® Fuse |

### H. Part No: 12033731 (Black)
**12146104 (Red)**
**12059426 (Black—Dual)**

| | |
|---|---|
| Description: | Cover |
| Size: | 38.2L x 22.6H x 45.0W |
| Size (Dual): | 38.2L x 23.5H x 56.3W |
| Material: | PA66 HS IM |

**NOTE:** Specifications in this catalog are for general reference only and are subject to change without notice. To verify product information, please contact a Delphi representative.

# Device Connections

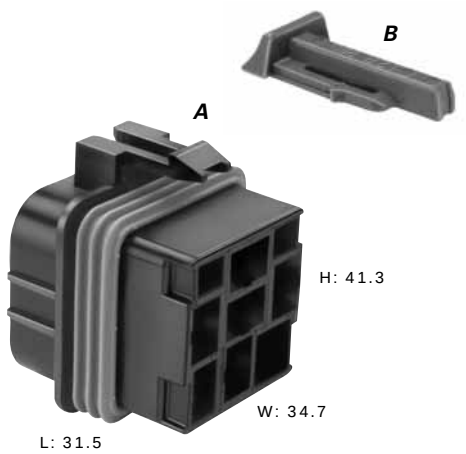


**A. Part No: 12092605**
**12065686**
**12065685**

| | |
|---|---|
| Description: | 630 Pull-to-Seat Connector Assembly |
| Size: | 31.5L x 41.3H x 34.7W |
| Color: | Black |
| Material: | PA6 |
| Terminals: | See Page 7.7, 630 Metri-Pack Pull-to-Seat |
| Plugs: | See Page 7.7 |
| Application: | Relay (ISO) |

**B. Part No: 12052834**

| | |
|---|---|
| Description: | CPA |
| Color: | Green |
| Material: | PP |

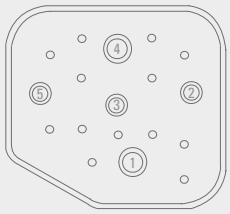


Multiple Cavity Cable Seal (Included)

**Cable O.D. (mm)**

| Conn. Asm. Part Number | Cable Seal Color | Cavity 1 | Cavity 2 | Cavity 3 | Cavity 4 | Cavity 5 |
|---|---|---|---|---|---|---|
| 12092605 | Orange | 1.60-2.12 | 1.60-2.12 | 1.60-2.12 | Blocked | 1.60-2.12 |
| 12065686 | Lt. Gray | 3.49-3.88 | 2.03-2.44 | Blocked | 3.49-3.88 | 2.03-2.44 |
| 12065685 | Green | 3.49-3.88 | 2.03-2.44 | 2.03-2.44 | 3.49-3.88 | 2.03-2.44 |



**NOTE:** Specifications in this catalog are for general reference only and are subject to change without notice. To verify product information, please contact a Delphi representative.

# Temperature Sensors

Delphi's growing line of temperature sensors is a perfect integration of product and process technologies. Our crimpless conductive path design enables automatic processing for efficient, cost-effective sensor manufacturing.

Capable of matching any calibration criteria, these reliable and durable sensors can be packaged into customer systems worldwide. These products can be promptly brought to market, utilizing Delphi's global network of engineering and manufacturing locations.

Our sensor product line offers a variety of designs for various sensing applications. In addition, we are currently developing humidity sensor products for EMS and HVAC applications including intake air humidity measurement, cabin air relative humidity, and integrated dew point and glass temperature for use in fog predication algorithms.

## Temperature Sensor Features

- Rugged housing design
- Customized electrical and mechanical mounting
- Design flexibility
- Few components, cost effective

# Air

## Description

Air temperature sensors are continuous function devices that change resistance inversely proportional to temperature. These sensors consist of two major components: the high temperature thermoplastic shell and a thermistor pre-mold sub-assembly. The plastic shell is custom designed to meet specific mounting and packaging requirements. Containing an NTC thermistor, the patented pre-mold assembly is inserted into the shell.

## Typical Application

The air sensors measure the engine intake air temperature in the manifold, in the intake air duct, and in the air cleaner. They provide a signal to the Powertrain Control Module (PCM).

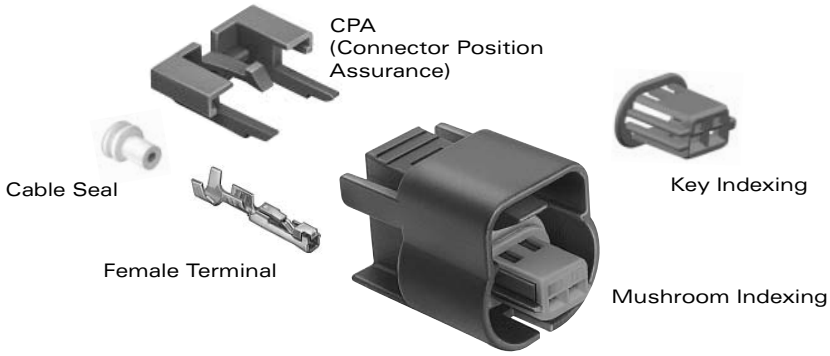


**Female GT Connector Assembly**

**Sensor Assembly**

### 150 GT Connector Assemblies Sealed

| Cavities | Connector Part # | Cover/Indexing | Color | Material |
|---|---|---|---|---|
| 2 | 15336004 | Shrouded/Mushroom | Black | PA6 10% GF & 20% GB |
| 2 | 15335987 | Shrouded/Key | Black | PA6 10% GF & 20% GB |
| 2 | 15449028 | Unshrouded/Mushroom | Black | PBT 20% GF |

Mating options, 150.2 Metri-Pack Pull-to-Seat Connectors: 12162193, 12162194, 12162195, 12162197, 12162198, 12162199.

### Air Temperature Sensors

| Cavity Indexing | Air Temp. Sensor | Color | Material |
|---|---|---|---|
| Mushroom | 12110446 | Black | PEI 30% GF |
| Key | 12146830 | Gray | PEI 30% GF |
| Key | 12129596 | Black | PA66 HS 33% GF |
| Key | 12160244 | Black | PBT 30% GF |
| Key | 12160245 | Black | PBT 30% GF |
| Key | 12160246 | Black | PBT 30% GF |

### 150 GT Female Terminals Sealed

| Part # | Cable Range ($mm^2$) | Material | Plating |
|---|---|---|---|
| 15326266 | 0.50-0.35 | Tin Brass | Tin |
| 15326267 | 1.00*-0.75 | Tin Brass | Tin |

*Accommodates 1.00 European Ultra Thin Wall Cable.
Accommodates 0.80 SAE Ultra Thin Wall Cable.

### GT Cable Seals

| Reel Part # | Loose Part # | Cable Dia. | Material | Color |
|---|---|---|---|---|
| 12191155 | 15366022 | 1.47-1.85 | Silicone | Green |
| – | 15305351 | 1.70-2.10 | Silicone | Yellow |

**NOTE:** Specifications in this catalog are for general reference only and are subject to change without notice. To verify product information, please contact a Delphi representative.

# Air

## Chart A

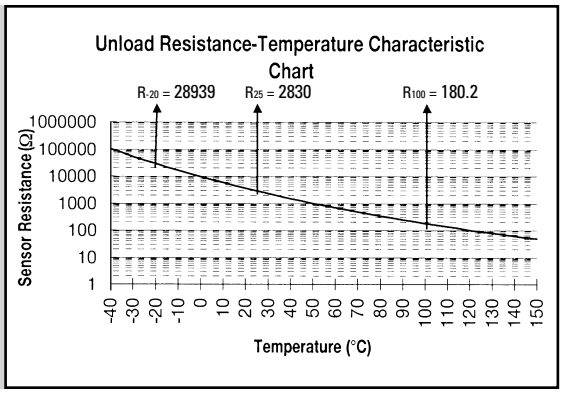


## Chart B

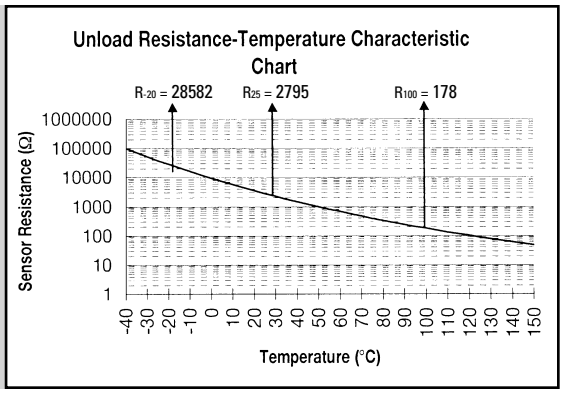


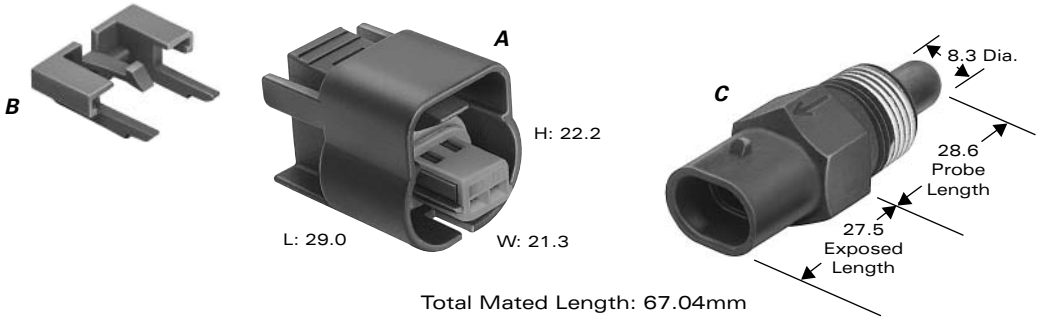


### A. Part No: 15336004 (Shrouded)

| | |
|---|---|
| Material: | PA6 10% GF & 20% GB |
| | **15449028 (Unshrouded)** |
| Material: | PBT 20% GF |
| Description: | 150 GT Connector Assembly 2F |
| Size: | 29.0L x 22.2H x 21.3W |
| Color: | Black |
| Terminals: | See Page 8.2 |
| Seals: | See Page 8.2 |
| Mating Opt: | 150.2 Metri-Pack Pull-To-Seat Connectors: 12162193, 12162194, 12162195 |

### B. Part No: 15317832

| | |
|---|---|
| Description: | CPA |
| Color: | Gray |
| Material: | PA6 10% GF & 20% GB |

### C. Part No: 12110446

| | |
|---|---|
| Description: | Sensor Assembly 2M |
| Color: | Black |
| Material: | PEI 30% GF |
| Weight: | 13.2g |
| Mounting Thread Size: | 3/8″ - 18 NPTF |

| Thermal & Electrical Properties | |
|---|---|
| Typical Voltage Supply: | 5V dc |
| Operating Temperature: | -40˚C to 135˚C |
| Resistive Range (Ω): | See Chart A |
| Dissipation Constant: | 18mW/˚C |
| Thermal Time Constant: | 60 seconds |
| Accuracy: | See Chart A |

**NOTE:** Specifications in this catalog are for general reference only and are subject to change without notice. To verify product information, please contact a Delphi representative.

# Air

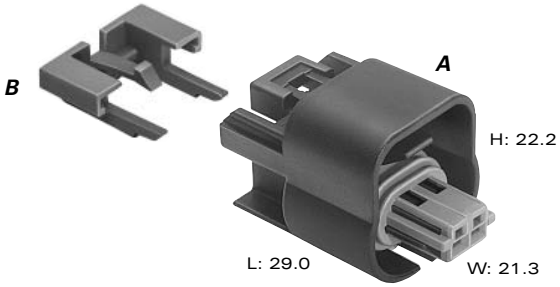


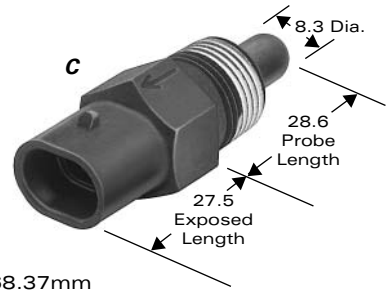


Total Mated Length: 68.37mm

### A. Part No: 15335987

| | |
|---|---|
| Description: | 150 GT Connector Assembly 2F |
| Size: | 29.0L x 22.2H x 21.3W |
| Color: | Black |
| Material: | PA6 10% GF & 20% GB |
| Terminals: | See Page 8.2 |
| Seals: | See Page 8.2 |
| Mating Opt: | 150.2 Metri-Pack Pull-To-Seat Connectors 12162197, 12162198, 12162199 |

### B. Part No: 15317832

| | |
|---|---|
| Description: | CPA |
| Color: | Gray |
| Material: | PA6 10% GF & 20% GB |

### C. Part No: 12146830

| | |
|---|---|
| Description: | Sensor Assembly 2M |
| Color: | Gray |
| Material: | PEI 30% GF |
| Weight: | 13.8g |
| Mounting Thread Size: | 3/8" - 18 NPTF |

| Thermal & Electrical Properties | |
|---|---|
| Typical Voltage Supply: | 5V DC |
| Operating Temperature: | -40˚C to 135˚C |
| Resistive Range (Ω): | See Chart A |
| Dissipation Constant: | 18mW/˚C |
| Thermal Time Constant: | 60 seconds |
| Accuracy: | See Chart A |

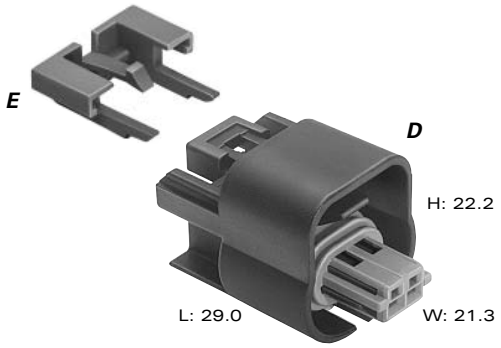


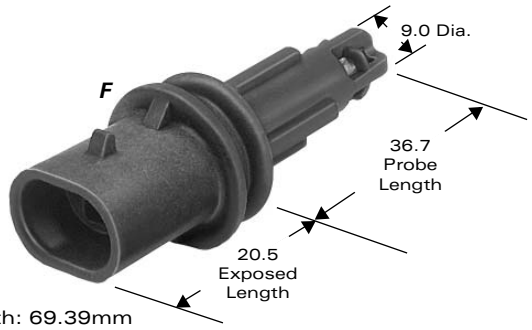


Total Mated Length: 69.39mm

### D. Part No: 15335987

| | |
|---|---|
| Description: | 150 GT Connector Assembly 2F |
| Size: | 29.0L x 22.2H x 21.3W |
| Color: | Black |
| Material: | PA6 10% GF & 20% GB |
| Terminals: | See Page 8.2 |
| Seals: | See Page 8.2 |
| Mating Opt: | 150.2 Metri-Pack Pull-To-Seat Connectors 12162197, 12162198, 12162199 |

### E. Part No: 15317832

| | |
|---|---|
| Description: | CPA |
| Color: | Gray |
| Material: | PA6 10% GF & 20% GB |

### F. Part No: 12129596

| | |
|---|---|
| Description: | Sensor Assembly 2M |
| Color: | Black |
| Material: | PA66 HS 33% GF |
| Weight: | 8.2g |
| Mounting: | Push |

| Thermal & Electrical Properties | |
|---|---|
| Typical Voltage Supply: | 5V dc |
| Operating Temperature: | -40˚C to 135˚C |
| Resistive Range (Ω): | See Chart A |
| Dissipation Constant: | 12mW/˚C |
| Thermal Time Constant: | <15 seconds |
| Accuracy: | See Chart A |

**NOTE:** Specifications in this catalog are for general reference only and are subject to change without notice. To verify product information, please contact a Delphi representative.

# Air

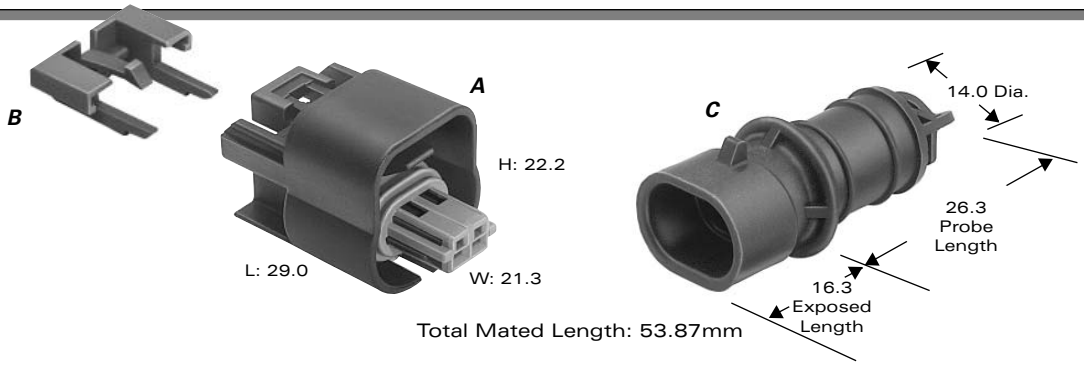


### A. Part No: 15335987

| | |
|---|---|
| Description: | 150 GT Connector Assembly 2F |
| Size: | 29.0L x 22.2H x 21.3W |
| Color: | Black |
| Material: | PA6 10% GF & 20% GB |
| Terminals: | See Page 8.2 |
| Seals: | See Page 8.2 |
| Mating Opt: | 150.2 Metri-Pack Pull-To-Seat Connectors 12162197, 12162198, 12162199 |

### B. Part No: 15317832

| | |
|---|---|
| Description: | CPA |
| Color: | Gray |
| Material: | PA6 10% GF & 20% GB |

### C. Part No: 12160244

| | |
|---|---|
| Description: | Sensor Assembly 2M |
| Color: | Black |
| Material: | PBT 30% GF |
| Weight: | 5.5g |
| Mounting: | Push |

| Thermal & Electrical Properties | |
|---|---|
| Typical Voltage Supply: | 5V dc |
| Operating Temperature: | -40˚C to 135˚C |
| Resistive Range (Ω): | See Chart B |
| Dissipation Constant: | 9mW/˚C |
| Thermal Time Constant: | <15 seconds |
| Accuracy: | See Chart B |

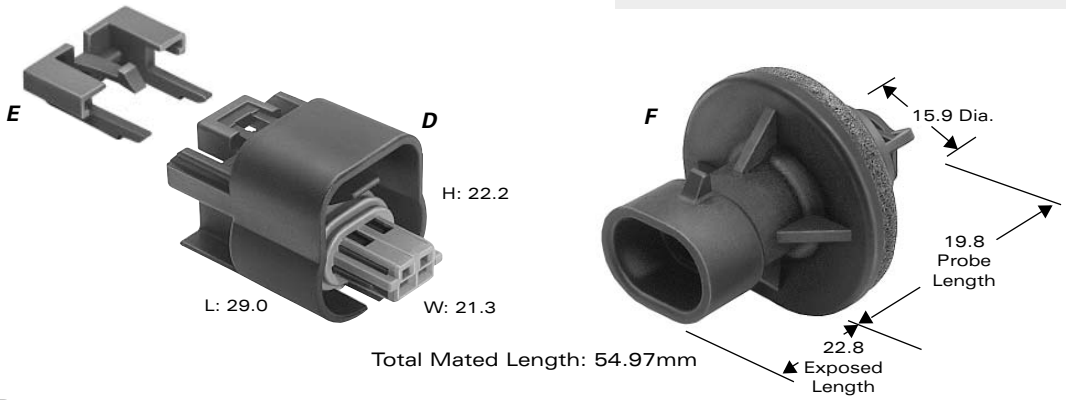


### D. Part No: 15335987

| | |
|---|---|
| Description: | 150 GT Connector Assembly 2F |
| Size: | 29.0L x 22.2H x 21.3W |
| Color: | Black |
| Material: | PA6 10% GF & 20% GB |
| Terminals: | See Page 8.2 |
| Seals: | See Page 8.2 |
| Mating Opt: | 150.2 Metri-Pack Pull-To-Seat Connectors 12162197, 12162198, 12162199 |

### E. Part No: 15317832

| | |
|---|---|
| Description: | CPA |
| Color: | Gray |
| Material: | PA6 10% GF & 20% GB |

### F. Part No: 12160245

| | |
|---|---|
| Description: | Sensor Assembly 2M |
| Color: | Black |
| Material: | PBT 30% GF |
| Weight: | 8.9g |
| Mounting: | Clip |

| Thermal & Electrical Properties | |
|---|---|
| Typical Voltage Supply: | 5V dc |
| Operating Temperature: | -40˚C to 135˚C |
| Resistive Range (Ω): | See Chart B |
| Dissipation Constant: | 9mW/˚C |
| Thermal Time Constant: | <15 seconds |
| Accuracy: | See Chart B |

**NOTE:** Specifications in this catalog are for general reference only and are subject to change without notice. To verify product information, please contact a Delphi representative.

# Air

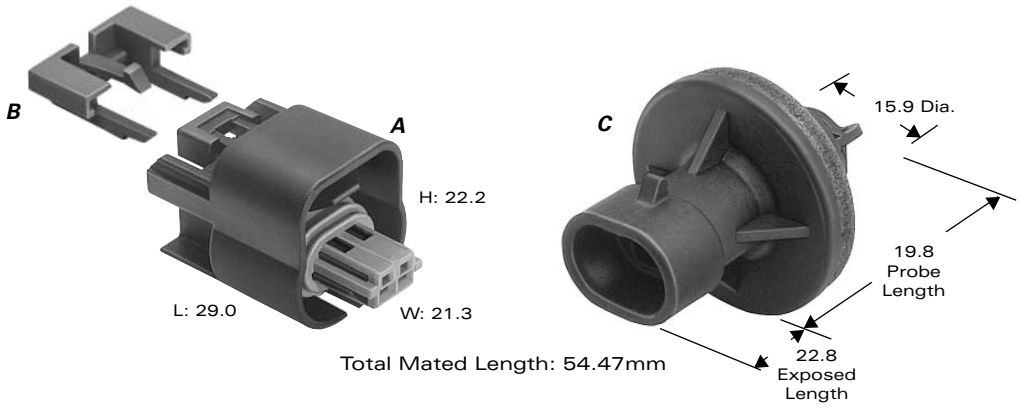


### A. Part No: 15335987

| | |
|---|---|
| Description: | 150 GT Connector Assembly 2F |
| Size: | 29.0L x 22.2H x 21.3W |
| Color: | Black |
| Material: | PA6 10% GF & 20% GB |
| Terminals: | See Page 8.2 |
| Seals: | See Page 8.2 |
| Mating Opt: | 150.2 Metri-Pack Pull-To-Seat Connectors 12162197, 12162198, 12162199 |

### B. Part No: 15317832

| | |
|---|---|
| Description: | CPA |
| Color: | Gray |
| Material: | PA6 10% GF & 20% GB |

### C. Part No: 12160246

| | |
|---|---|
| Description: | Sensor Assembly 2M |
| Color: | Black |
| Material: | PBT 30% GF |
| Weight: | 9.3g |
| Mounting: | Twist Lock |

| Thermal & Electrical Properties | |
|---|---|
| Typical voltage supply: | 5V dc |
| Operating temperature: | -40˚C to 135˚C |
| Resistive range (Ω): | See Chart B |
| Dissipation constant: | 9mW/˚C |
| Thermal time constant: | <15 seconds |
| Accuracy: | See Chart B |

**NOTE:** Specifications in this catalog are for general reference only and are subject to change without notice. To verify product information, please contact a Delphi representative.

# HVAC Air

## Description

The Heating Ventilation Air Conditioning temperature sensor is a continuous function device that changes resistance inversely proportional to temperature. The discharge air sensor consists of an NTC thermistor with a crimpless conductive path protected by a plastic body.

## Typical Application

The discharge air sensor measures the inside air temperature and provides a signal to the automatic climate control unit.

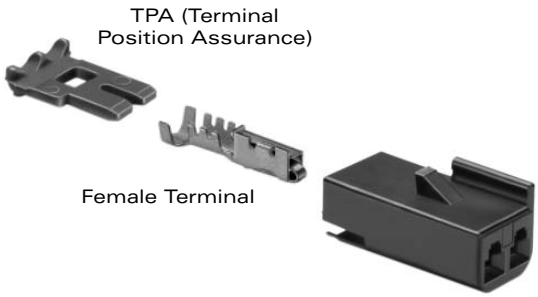


**Female Metri-Pack Connector**

**Sensor Assembly**

### 150 Metri-Pack Female Connector Unsealed

| Cavities | Part # | Color | Material | TPA |
|---|---|---|---|---|
| 2 | 12047662 | Black | PA66 HS IM | 15324070 |

### HVAC Temperature Sensor

| HVAC Temperature Sensor | Color | Material |
|---|---|---|
| 12160947 | Black | PA66 HS IM |

### 150 Metri-Pack Female Terminals Unsealed

| Part # | Cable Range (mm²) | Material | Plating |
|---|---|---|---|
| 12047767 | 1.0-0.80 | Silicon Bronze | Tin |
| 12064971 | 0.50-0.35 | Silicon Bronze | Tin |

**NOTE:** Specifications in this catalog are for general reference only and are subject to change without notice. To verify product information, please contact a Delphi representative.

# HVAC Air

## Chart B

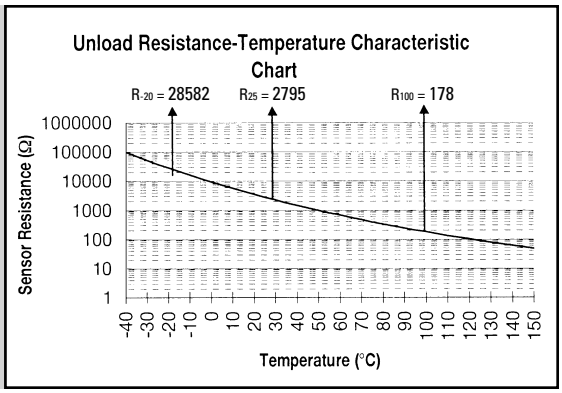


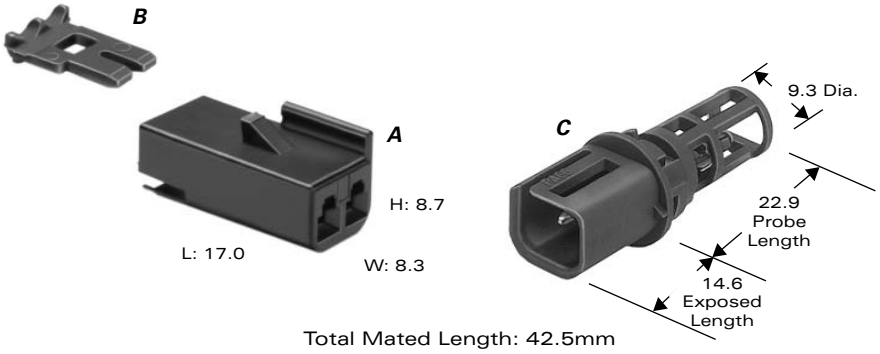


### A. Part No: 12047662 (Black) 12059249 (Cream)

| | |
|---|---|
| Description: | 150 Metri-Pack Connector 2F |
| Size: | 17.0L x 8.7H x 8.3W |
| Material: | PA66 HS IM |
| Terminals: | See Page 8.7 |

### B. Part No: 15324070

| | |
|---|---|
| Description: | TPA |
| Color: | Lt. Gray |
| Material: | PA66 HS IM |

### C. Part No: 12160947

| | |
|---|---|
| Description: | Sensor Assembly 2M |
| Color: | Black |
| Material: | PA66 HS IM |
| Weight: | 2.2g |
| Mounting: | Twist Lock |

| Thermal & Electrical Properties | |
|---|---|
| Typical voltage supply: | 5V dc |
| Operating temperature: | -40˚C to 125˚C |
| Resistive range (Ω): | See Chart B |
| Dissipation constant: | 9mW/˚C |
| Thermal time constant: | 8 seconds |
| Accuracy: | See Chart B |

**NOTE:** Specifications in this catalog are for general reference only and are subject to change without notice. To verify product information, please contact a Delphi representative.

# Coolant/Fluid

## Description

Coolant/Fluid temperature sensors are continuous function devices that change resistance inversely proportional to temperature. These brass sensors consist of five major components: the brass shell, thermal grease, insulating sleeve, gasket, and insert molded connector. The shell utilizes customized thread and hex sizes per application requirements and the connector contains an NTC thermistor with a crimpless conductive path.

## Typical Application

The brass sensors measure the temperature of the engine oil, the fuel or the engine coolant and provide a signal to the Powertrain Control Module (PCM).

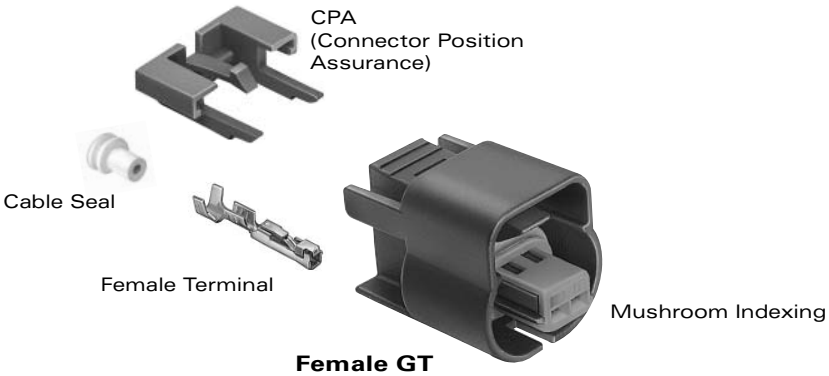


**Female GT Connector Assembly**

**Sensor Assembly**

### 150 GT Connector Assemblies Sealed

| Cavities | Connector Part # | Cover/Indexing | Color | Material |
|---|---|---|---|---|
| 2 | 15336004 | Shrouded/Mushroom | Black | PA6 10% GF & 20% GB |
| 2 | 15449028 | Unshrouded/Mushroom | Black | PBT 20% GF |

Mating options, 150.2 Metri-Pack Pull-to-Seat Connectors: 12162193, 12162194, 12162195

### Coolant/Fluid Sensors

| Cavity Indexing | Coolant/Fluid Sensors | Color | Material | |
|---|---|---|---|---|
| | | | Housing | Connector |
| Mushroom | 15326386 | Black | Brass | PBT 30% GF |
| Mushroom | 12146897 | Black | Brass | PBT 30% GF |

### 150 GT Female Terminals Sealed

| Part # | Cable Range (mm²) | Material | Plating |
|---|---|---|---|
| 15326266 | 0.50-0.35 | Tin Brass | Tin |
| 15326267 | 1.00*-0.75 | Tin Brass | Tin |

*Accommodates 1.00 European Ultra Thin Wall Cable.
Accommodates 0.80 SAE Ultra Thin Wall Cable.

### GT Cable Seals

| Reel Part # | Loose Part # | Cable Dia. | Material | Color |
|---|---|---|---|---|
| 12191155 | 15366022 | 1.47-1.85 | Silicone | Green |
| – | 15305351 | 1.70-2.10 | Silicone | Yellow |

**NOTE:** Specifications in this catalog are for general reference only and are subject to change without notice. To verify product information, please contact a Delphi representative.

# Coolant/Fluid

## Chart A

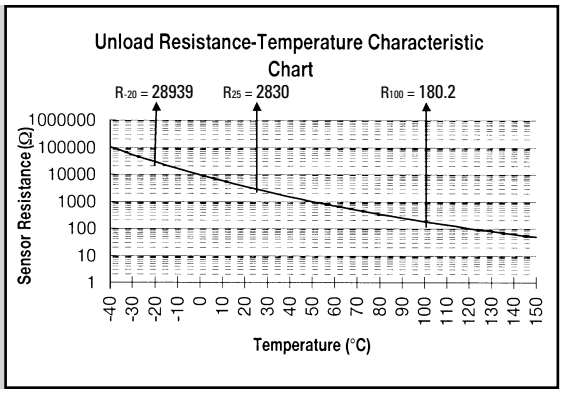


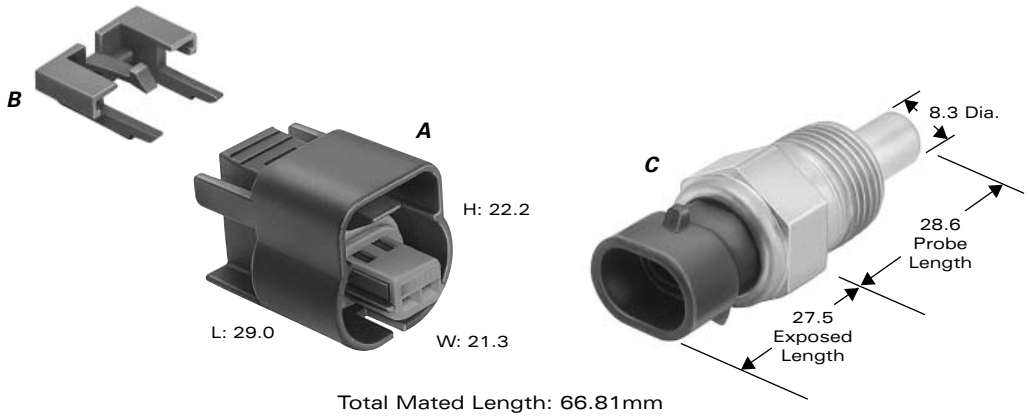


### A. Part No: 15336004 (Shrouded)

| | |
|---|---|
| Material: | PA6 10% GF & 20% GB |
| | **15449028** (Unshrouded) |
| Material: | PBT 20% GF |
| Description: | 150 GT Connector Assembly 2F |
| Size: | 29.0L x 22.2H x 21.3W |
| Color: | Black |
| Terminals: | See Page 8.9 |
| Seals: | See Page 8.9 |
| Mating Opt: | 150.2 Metri-Pack Pull-To-Seat Connectors 12162193, 12162194, 12162195 |

### B. Part No: 15317832

| | |
|---|---|
| Description: | CPA |
| Color: | Gray |
| Material: | PA6 10% GF & 20% GB |

### C. Part No: 15326386

| | |
|---|---|
| Description: | Sensor Assembly 2M |
| Color: | Black |
| Material: | Brass Housing; PBT 30% GF Connector |
| Weight: | 39.5g |

Mounting Thread Size: 3/8″ - 18 NPTF

| Thermal & Electrical Properties | |
|---|---|
| Typical voltage supply: | 5V dc |
| Operating temperature: | -40˚C to 135˚C |
| Resistive range (Ω): | See Chart A |
| Dissipation constant: | 25mW/˚C |
| Thermal time constant: | 20 to 30 seconds |
| Accuracy: | See Chart A |

**NOTE:** Specifications in this catalog are for general reference only and are subject to change without notice. To verify product information, please contact a Delphi representative.

# Coolant/Fluid

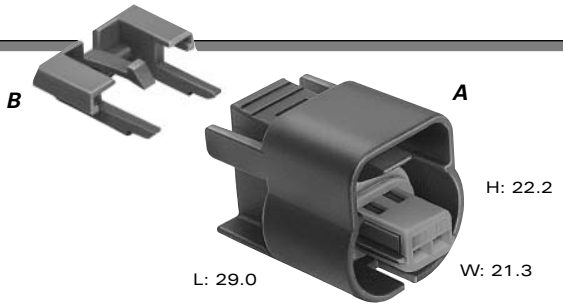


**A. Part No: 15336004** (Shrouded)

| | |
|---|---|
| Material: | PA6 10% GF & 20% GB |
| | **15449028** (Unshrouded) |
| Material: | PBT 20% GF |
| Description: | 150 GT Connector Assembly 2F |
| Size: | 29.0L x 22.2H x 21.3W |
| Color: | Black |
| Terminals: | See Page 8.9 |
| Seals: | See Page 8.9 |
| Mating Opt: | 150.2 Metri-Pack Pull-To-Seat Connectors 12162193, 12162194, 12162195 |

**B. Part No: 15317832**

| | |
|---|---|
| Description: | CPA |
| Color: | Gray |
| Material: | PA6 10% GF & 20% GB |

| Thermal & Electrical Properties | |
|---|---|
| Typical Voltage Supply: | 5V dc |
| Operating Temperature: | -40˚C to 135˚C |
| Resistive Range (Ω): | See Chart A |
| Dissipation Constant: | 25mW/˚C |
| Thermal Time Constant: | 20 to 30 seconds |
| Accuracy: | See Chart A |

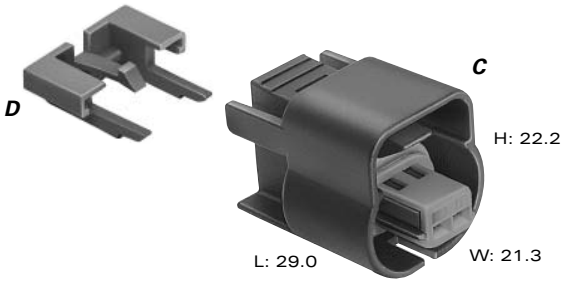


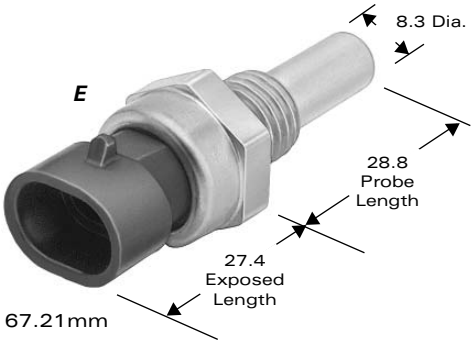


Total Mated Length: 67.21mm

**C. Part No: 15336004** (Shrouded)

| | |
|---|---|
| Material: | PA6 10% GF & 20% GB |
| | **15449028** (Unshrouded) |
| Material: | PBT 20% GF |
| Description: | 150 GT Connector Assembly 2F |
| Size: | 29.0L x 22.2H x 21.3W |
| Color: | Black |
| Terminals: | See Page 8.9 |
| Seals: | See Page 8.9 |
| Mating Opt: | 150.2 Metri-Pack Pull-To-Seat Connectors 12162193, 12162194, 12162195 |

**D. Part No: 15317832**

| | |
|---|---|
| Description: | CPA |
| Color: | Gray |
| Material: | PA6 10% GF & 20% GB |

**E. Part No: 12146897**

| | |
|---|---|
| Description: | Sensor Assembly 2M |
| Color: | Black |
| Material: | Brass Housing; PBT 30% GF Connector |
| Weight: | 23.2g |

Mounting Thread Size: M12 X 1.5

| Thermal & Electrical Properties | |
|---|---|
| Typical Voltage Supply: | 5V dc |
| Operating Temperature: | -40˚C to 135˚C |
| Resistive Range (Ω): | See Chart A |
| Dissipation Constant: | 25mW/˚C |
| Thermal Time Constant: | 20 to 30 seconds |
| Accuracy: | See Chart A |

**NOTE:** Specifications in this catalog are for general reference only and are subject to change without notice. To verify product information, please contact a Delphi representative.

# Transmission

## Description

Transmission temperature sensors are continuous function devices that change resistance inversely proportional to temperature. The two primary types of sensors that monitor the automatic transmission fluid are: the metal stator temperature sensor and the plastic sump temperature sensor. The stator sensor consists of a brass or stainless steel shell, thermal grease, insulating sleeve, gasket, and insert-molded connector containing an NTC thermistor. The sump sensor consists of a high temperature plastic shell and a patented pre-mold sub-assembly that contains an NTC thermistor with a crimpless conductive path.

## Typical Application

These sensors measure the fluid temperature in two transmission environments: in-line near the stator and the sump tank. A signal is provided to the Powertrain Control Module (PCM).

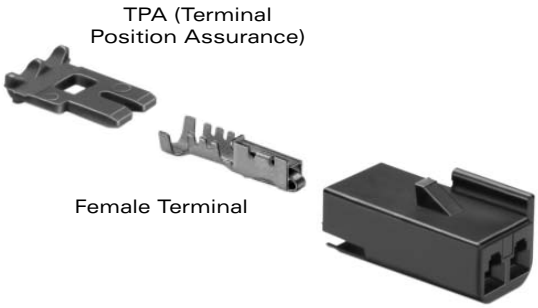


**Female Metri-Pack Connector**

**Sensor Assembly**

### 150 Metri-Pack Female Connector Unsealed

| Cavities | Part # | Color | Material | TPA |
|---|---|---|---|---|
| 2 | 12047662 | Black | PA66 HS IM | 15324070 |

### Transmission Temperature Sensors

| Transmission Temp. Sensors | Color | Material | |
|---|---|---|---|
| | | Housing | Connector |
| 12160855 | Black | Brass | PA66 HS IM |
| 12129691 | Md. Gray | PA66 HS IM | – |

### 150 Metri-Pack Female Terminals Unsealed

| Part # | Cable Range (mm²) | Material | Plating |
|---|---|---|---|
| 12047767 | 1.0-0.80 | Silicon Bronze | Tin |
| 12064971 | 0.50-0.35 | Silicon Bronze | Tin |

**NOTE:** Specifications in this catalog are for general reference only and are subject to change without notice. To verify product information, please contact a Delphi representative.

# Transmission

## Chart B

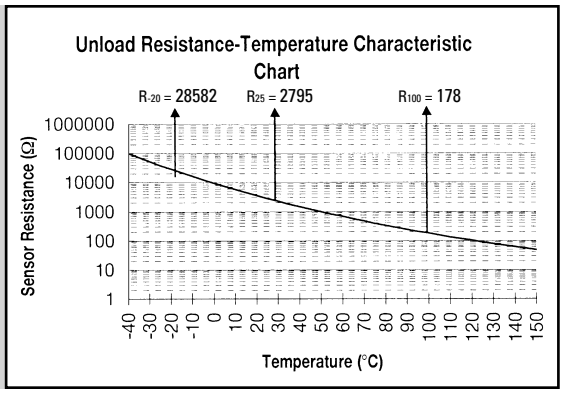


## Chart C

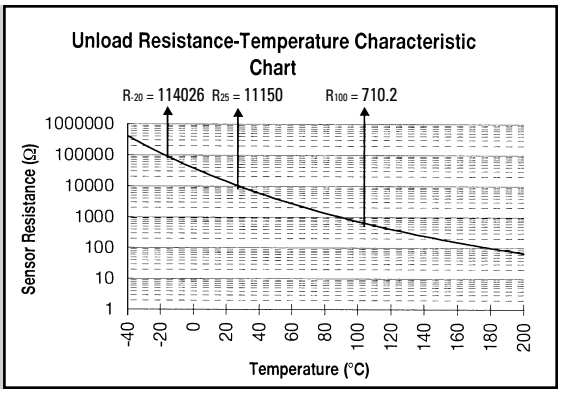


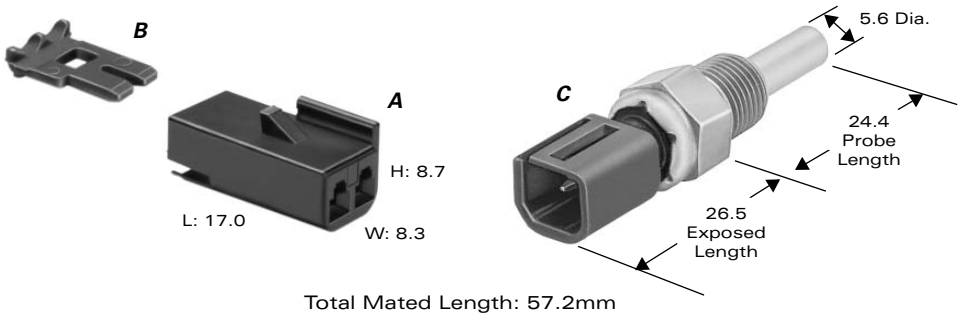


Total Mated Length: 57.2mm

### A. Part No: 12047662 (Black) 12059249 (Cream)

| | |
|---|---|
| Description: | 150 Metri-Pack Connector 2F |
| Size: | 17.0L x 8.7H x 8.3W |
| Material: | PA66 HS IM |
| Terminals: | See Page 8.12 |

### B. Part No: 15324070

| | |
|---|---|
| Description: | TPA |
| Color: | Lt. Gray |
| Material: | PA66 HS IM |

### C. Part No: 12160855

| | |
|---|---|
| Description: | Sensor Assembly 2M |
| Color: | Black |
| Material: | Brass Housing; PA66 HS IM Connector |
| Weight: | 12.2g |
| Mounting Thread Size: | 1/8"-27 PTF |

| Thermal & Electrical Properties | |
|---|---|
| Typical Voltage Supply: | 5V dc |
| Operating Temperature: | |
| Sensor Tip: | -40˚C to 200˚C |
| Connector: | -40˚C to 150˚C |
| Resistive Range (Ω): | See Chart C |
| Dissipation Constant: | 12mW/˚C |
| Thermal Time Constant: | 10 seconds |
| Accuracy: | See Chart C |

**NOTE:** Specifications in this catalog are for general reference only and are subject to change without notice. To verify product information, please contact a Delphi representative.

# Transmission

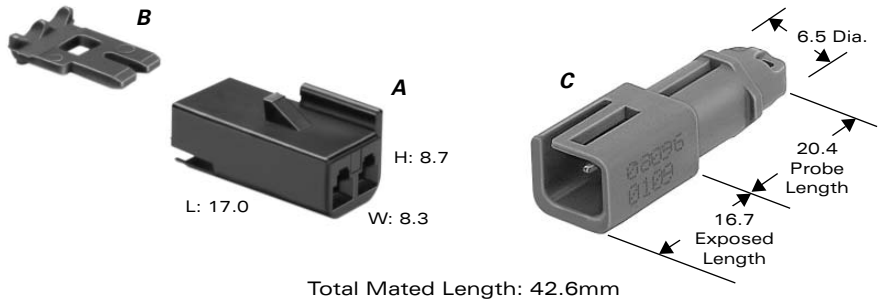


## A. Part No: 12047662 (Black) 12059249 (Cream)

| | |
|---|---|
| Description: | 150 Metri-Pack Connector 2F |
| Size: | 17.0L x 8.7H x 8.3W |
| Material: | PA66 HS IM |
| Terminals: | See Page 8.12 |

## B. Part No: 15324070

| | |
|---|---|
| Description: | TPA |
| Color: | Lt. Gray |
| Material: | PA66 HS IM |

## C. Part No: 12129691

| | |
|---|---|
| Description: | Sensor Assembly 2M |
| Color: | Md. Gray |
| Material: | PA66 HS IM |
| Weight: | 2.8g |
| Mounting: | Clip/Tie |

| Thermal & Electrical Properties | |
|---|---|
| Typical voltage supply: | 5V dc |
| Operating temperature: | -40˚C to 135˚C |
| Resistive range (Ω): | See Chart B |
| Dissipation constant: | 12mW/˚C |
| Thermal time constant: | 5 seconds |
| Accuracy: | See Chart B |

**NOTE:** Specifications in this catalog are for general reference only and are subject to change without notice. To verify product information, please contact a Delphi representative.

# Ring Terminals, Battery Terminals, 56 Series, Carriers & Clips

## Ring Terminal Features

- Advanced crimp wing design
- Complete selection of English and Metric stud-hole sizes
- Wide variety of locking and orientation features

## Battery Terminal Features

- State of the art crimp interface technology
- Designed for all appropriate battery and starter cable gage sizes and cable types
- Battery terminals mate to: side post, top post, or top stud batteries
- Starter terminals have anti-rotation features for ease of installation

## 56 Series Device Features

- Proven connection systems reliability
- Compatible connection systems to most devices
- State of the art crimp interface technology

## Clip Features

- Broad product selection
- Clips attach easily and securely to connectors via mechanical locking design
- Proven anti-rattle design features

# Ring Terminals

A wide selection of basic washer style and spade style terminals with design features to accommodate various application requirements. These terminals are designed with both core and insulation crimp wings and employ the same state of the art crimp design features as our entire connection systems family.

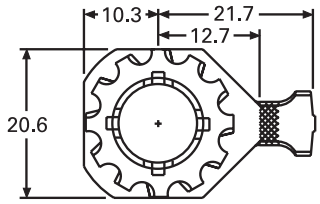


## Ring and Washer Terminal Assemblies

| Stud Size | Hole Dia. | Cable Range (mm²) | Part # | Material | Plating | Stock Thickness (mm) |
|---|---|---|---|---|---|---|
| M6.3 | 7.16 | 8.0 | 12162932 | Brass | Tin | 0.81 |
| M6.3 | 7.16 | 5.0-3.0 | 12065449 | Brass | Tin | 0.81 |
| M6.3 | 7.16 | 3.0-2.0 | 12089263 | Brass | Tin | 0.81 |
| M6.3 | 7.16 | 1.0-0.80 | 12089496 | Brass | Tin | 0.81 |
| M6.3 | 7.16 | 1.0-0.80 (2 Req'd.) | 12103086 | Brass | Tin | 0.81 |
| M10 | 10.34 | 5.0 | 12084554 | Brass | Tin | 0.81 |
| M10 | 10.34 | 3.0 - 2.0 | 12089240 | Brass | Tin | 0.81 |
| M10 | 10.34 | 1.0-0.80 | 12089045 | Brass | Tin | 0.81 |
| M10 | 10.34 | 1.0-0.80 (2 Req'd.) | 12084185 | Brass | Tin | 0.81 |
| M12 | 12.60 | 1.0 (2 Req'd.)<br>1.0-0.80 (2 Req'd.) | 12129822 | Brass | Tin | 0.81 |

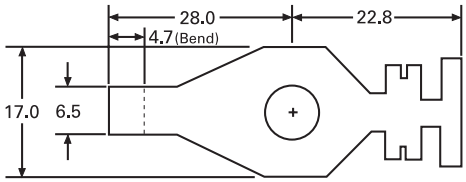


## Anti-Rotation Terminals w/90° Tab

| Stud Size | Hole Dia. | Cable Range (mm²) | Part # | Material | Plating | Stock Thickness (mm) |
|---|---|---|---|---|---|---|
| M6 | 6.70 | 8.0 | 15354755 | Copper Alloy | Tin | 0.81 |
| M6 | 6.70 | 5.0 | 15354754 | Copper Alloy | Tin | 0.81 |
| M6 | 6.70 | 3.0-2.0 | 15354753 | Copper Alloy | Tin | 0.81 |
| M6 | 6.70 | 1.0-0.80 | 15355521 | Copper Alloy | Tin | 0.81 |
| M8 | 8.50 | 8.0 | 15354758 | Copper Alloy | Tin | 0.81 |
| M8 | 8.50 | 5.0 | 15354757 | Copper Alloy | Tin | 0.81 |
| M8 | 8.50 | 3.0-2.0 | 15354756 | Copper Alloy | Tin | 0.81 |
| M10 | 10.60 | 1.0-0.80 | 12191057 | Copper Alloy | Tin | 0.81 |

Anti-rotation terminals are designed in a straight configuration.
A crimp and bend die is available for terminal application.



**NOTE:** Specifications in this catalog are for general reference only and are subject to change without notice. To verify product information, please contact a Delphi representative.

# Ring Terminals

## Small Ring Terminals

| Stud Size | Hole Dia. | Cable Range (mm²) | Part # | Material | Plating | Stock Thickness (mm) |
|---|---|---|---|---|---|---|
| M4 | 4.30 | 5.0 | 12103518 | Copper Alloy | Tin | 1.02 |
| M4 | 4.30 | 3.0-2.0 | 12103520 | Copper Alloy | Tin | 0.81 |
| M5 | 5.40 | 5.0 | 12103517 | Copper Alloy | Tin | 1.02 |
| M5 | 5.40 | 3.0-2.0 | 12103519 | Copper Alloy | Tin | 0.81 |

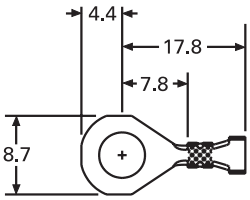

## Medium Ring Terminals

| Stud Size | Hole Dia. | Cable Range (mm²) | Part # | Material | Plating | Stock Thickness (mm) |
|---|---|---|---|---|---|---|
| M4 | 4.30 | 1.0-0.80 | 12103516 | Copper Alloy | Tin | 0.65 |
| M5 | 5.40 | 1.0-0.80 | 12103515 | Copper Alloy | Tin | 0.65 |
| M6 | 6.70 | 1.0-0.80 | 12103514 | Copper Alloy | Tin | 0.65 |

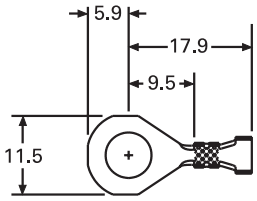

## Ring Terminals

| Stud Size | Hole Dia. | Cable Range (mm²) | Part # | Material | Plating | Stock Thickness (mm) |
|---|---|---|---|---|---|---|
| M6 | 6.70 | 5.0 | 12103512 | Copper Alloy | Tin | 1.02 |
| M6 | 6.70 | 3.0-2.0 | 12103513 | Copper Alloy | Tin | 0.81 |

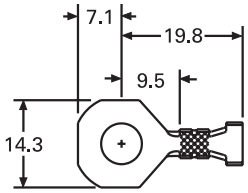

## Ring Terminals

| Stud Size | Hole Dia. | Cable Range (mm²) | Part # | Material | Plating | Stock Thickness (mm) |
|---|---|---|---|---|---|---|
| M6 | 6.70 | 8.0 | 12103965 | Copper Alloy | Tin | 1.02 |
| M6 | 6.70 | 5.0 | 12162098 | Copper Alloy | Tin | 1.02 |
| M6 | 6.70 | 3.0-2.0 | 12162099 | Copper Alloy | Tin | 0.81 |
| M6 | 6.70 | 1.0-0.80 | 12162100 | Copper Alloy | Tin | 0.65 |
| M6 | 6.70 | 1.0-0.80 (2 Req'd.) | 12103511 | Copper Alloy | Tin | 0.65 |
| M8 | 8.50 | 8.0 | 12103502 | Copper Alloy | Tin | 1.02 |
| M8 | 8.50 | 5.0 | 12103504 | Copper Alloy | Tin | 1.02 |
| M8 | 8.50 | 3.0-2.0 | 12103506 | Copper Alloy | Tin | 0.81 |
| M8 | 8.50 | 1.0-0.80 | 12103508 | Copper Alloy | Tin | 0.65 |
| M8 | 8.50 | 1.0-0.8 (2 Req'd.) | 12103510 | Copper Alloy | Tin | 0.65 |
| M10 | 10.60 | 8.0 | 12103501 | Copper Alloy | Tin | 1.02 |
| M10 | 10.60 | 5.0 | 12103503 | Copper Alloy | Tin | 1.02 |
| M10 | 10.60 | 3.0-2.0 | 12103505 | Copper Alloy | Tin | 0.81 |
| M10 | 10.60 | 1.0-0.80 | 12103507 | Copper Alloy | Tin | 0.65 |
| M10 | 10.60 | 1.0-0.80 (2 Req'd.) | 12103509 | Copper Alloy | Tin | 0.65 |

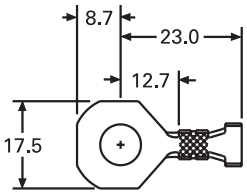

Anti-rotation terminals are designed in a straight configuration.
A crimp and bend die is available for terminal application.

**NOTE:** Specifications in this catalog are for general reference only and are subject to change without notice. To verify product information, please contact a Delphi representative.

# Battery / Heavy Duty Terminals

Delphi offers a complete line of top and side mounted battery terminals for all applications. Anti-rotation tabs are included for ease of installation and assembly. Stamped and serrated crimp wings offer unparalleled crimp reliability and durability.

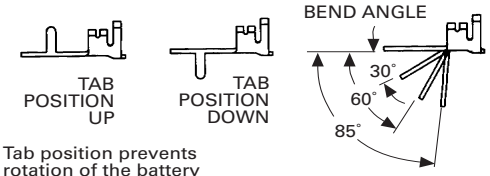


Tab position prevents rotation of the battery terminal during installation.

Delphi offers ***battery cable assemblies*** for applications requiring an angled terminal. Contact your regional support representative.

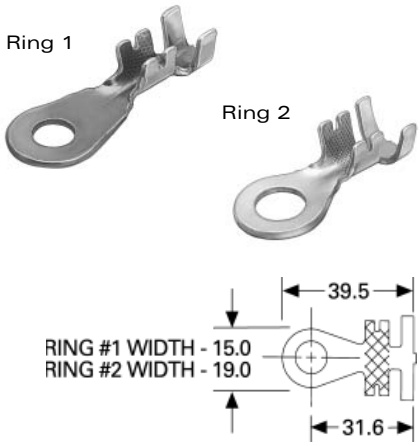


## Short Neck Ring Terminals

| Ring # | Stud Size | Hole Dia. | Cable Range (mm²) | Part # | Width | Material | Plating | Stock Thickness (mm) |
|---|---|---|---|---|---|---|---|---|
| 1 | M6 | 6.70 | 32.0 | 12146425 | 15.0 | Copper | Tin | 1.52 |
| 1 | M6 | 6.70 | 19.0-13.0 | 12146366 | 15.0 | Copper | Tin | 1.52 |
| 1 | M6 | 6.70 | 8.0 | 12146364 | 15.0 | Copper | Tin | 1.30 |
| 1 | M8 | 8.50 | 32.0 | 12191220 | 19.0 | Copper | Tin | 1.52 |
| 1 | M8 | 8.50 | 32.0 | 12146429 | 15.0 | Copper | Tin | 1.52 |
| 1 | M8 | 8.50 | 19.0-13.0 | 12146365 | 15.0 | Copper | Tin | 1.52 |
| 1 | M8 | 8.50 | 8.0 | 12146363 | 15.0 | Copper | Tin | 1.30 |
| 2 | M10 | 10.34 | 32.0 | 12146744 | 19.0 | Copper | Tin | 1.52 |
| 2 | M10 | 10.34 | 19.0-13.0 | 12146745 | 19.0 | Copper | Tin | 1.52 |

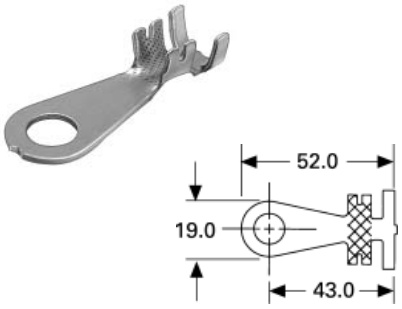


## Standard Neck Ring Terminals

| Stud Size | Hole Dia. | Cable Range (mm²) | Part # | Material | Plating | Stock Thickness (mm) |
|---|---|---|---|---|---|---|
| M6 | 6.70 | 32.0 | 12124276 | Copper | Tin | 1.52 |
| M6 | 6.70 | 19.0-13.0 | 12146713 | Copper | Tin | 1.52 |
| M6 | 6.70 | 8.0 | 12124296 | Copper | Tin | 1.52 |
| M8 | 8.50 | 62.0-50.0 | 12103014 | Copper | Tin | 1.83 |
| M8 | 8.50 | 32.0 | 12146361 | Copper | Tin | 1.52 |
| M8 | 8.50 | 19.0-13.0 | 12129598 | Copper | Tin | 1.52 |
| M8 | 8.50 | 8.0 | 12124297 | Copper | Tin | 1.52 |
| M10 | 10.34 | 62.0-50.0 | 12103010 | Copper | Tin | 1.83 |
| M10 | 10.34 | 50.0 | 12160231 | Copper | Tin | 1.83 |
| M10 | 10.34 | 32.0 | 12146360 | Copper | Tin | 1.52 |
| M10 | 10.34 | 19.0-13.0 | 12146362 | Copper | Tin | 1.52 |
| M10 | 10.34 | 8.0 | 12124295 | Copper | Tin | 1.30 |

**NOTE:** Specifications in this catalog are for general reference only and are subject to change without notice. To verify product information, please contact a Delphi representative.

# Battery / Heavy Duty Terminals

## Standard Neck Starter Terminals

| Stud Size | Hole Dia. | Tab Position | Cable Range (mm²) | Part # | Material | Plating | Stock Thickness (mm) |
|---|---|---|---|---|---|---|---|
| M8 | 8.50 | 30˚ Up | 32.0 | 12146506 | Copper | Tin | 1.52 |
| M10 | 10.34 | 30˚ Up | 32.0 | 12146401 | Copper | Tin | 1.52 |
| M8 | 8.50 | 30˚ Down | 32.0 | 15317798 | Copper | Tin | 1.52 |
| M8 | 8.50 | 30˚ Down | 19.0-13.0 | 12110246 | Copper | Tin | 1.52 |

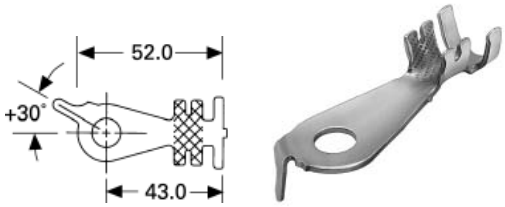


## Standard Neck Starter Terminals

| Stud Size | Hole Dia. | Tab Position | Cable Range (mm²) | Part # | Material | Plating | Stock Thickness (mm) |
|---|---|---|---|---|---|---|---|
| M8 | 8.50 | -30˚ Up | 50.0 | 12161119 | Copper | Tin | 1.83 |
| M8 | 8.50 | -30˚ Up | 32.0 | 12129433 | Copper | Tin | 1.52 |
| M8 | 8.50 | -30˚ Up | 19.0-13.0 | 12146579 | Copper | Tin | 1.52 |
| M10 | 10.34 | -30˚ Up | 50.0 | 12146471 | Copper | Tin | 1.83 |
| M10 | 10.34 | -30˚ Up | 32.0 | 12146487 | Copper | Tin | 1.52 |
| M8 | 8.50 | -30˚ Down | 32.0 | 12129651 | Copper | Tin | 1.52 |
| M8 | 8.50 | -30˚ Down | 19.0-13.0 | 12160443 | Copper | Tin | 1.52 |
| M10 | 10.34 | -30˚ Down | 32.0 | 12160281 | Copper | Tin | 1.52 |

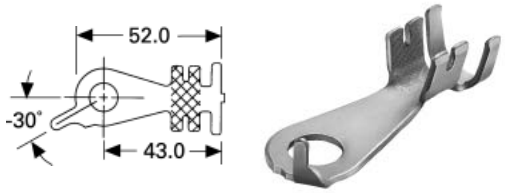


## Standard Neck Starter Terminals

| Stud Size | Hole Dia. | Tab Position | Cable Range (mm²) | Part # | Material | Plating | Stock Thickness (mm) |
|---|---|---|---|---|---|---|---|
| M8 | 8.50 | 90˚ Up | 50.0 | 15305504 | Copper | Tin | 1.83 |
| M8 | 8.50 | 90˚ Up | 32.0 | 12129437 | Copper | Tin | 1.52 |
| M8 | 8.50 | 90˚ Up | 19.0-13.0 | 12129435 | Copper | Tin | 1.52 |
| M10 | 10.34 | 90˚ Up | 50.0 | 12160229 | Copper | Tin | 1.83 |
| M10 | 10.34 | 90˚ Up | 32.0 | 15304850 | Copper | Tin | 1.52 |
| M8 | 8.50 | 90˚ Down | 32.0 | 12161133 | Copper | Tin | 1.52 |
| M8 | 8.50 | 90˚ Down | 19.0-13.0 | 12161170 | Copper | Tin | 1.52 |

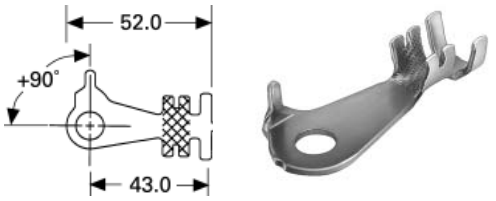


## Standard Neck Starter Terminals

| Stud Size | Hole Dia. | Tab Position | Cable Range (mm²) | Part # | Material | Plating | Stock Thickness (mm) |
|---|---|---|---|---|---|---|---|
| M8 | 8.50 | -90˚ Up | 32.0 | 12176593 | Copper | Tin | 1.52 |
| M8 | 8.50 | -90˚ Up | 19.0-13.0 | 12160242 | Copper | Tin | 1.52 |
| M10 | 10.34 | -90˚ Up | 50.0 | 12129222 | Copper | Tin | 1.83 |
| M10 | 10.34 | -90˚ Up | 32.0 | 12129628 | Copper | Tin | 1.52 |
| M8 | 8.50 | -90˚ Down | 50.0 | 12160233 | Copper | Tin | 1.83 |
| M8 | 8.50 | -90˚ Down | 32.0 | 12160232 | Copper | Tin | 1.52 |
| M8 | 8.50 | -90˚ Down | 19.0-13.0 | 12146999 | Copper | Tin | 1.52 |
| M10 | 10.34 | -90˚ Down | 19.0-13.0 | 12146736 | Copper | Tin | 1.52 |

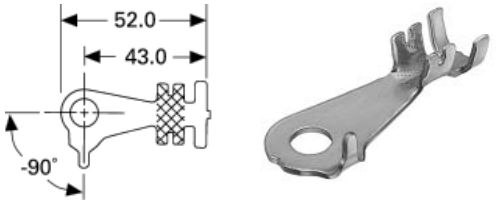


**NOTE:** Specifications in this catalog are for general reference only and are subject to change without notice. To verify product information, please contact a Delphi representative.

# Battery / Heavy Duty Terminals

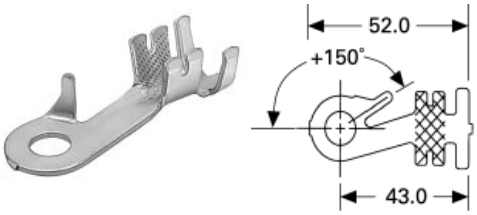


## Standard Neck Starter Terminals

| Stud Size | Hole Dia. | Tab Position | Cable Range (mm²) | Part # | Material | Plating | Stock Thickness (mm) |
|---|---|---|---|---|---|---|---|
| M8 | 8.50 | 150˚ Up | 50.0 | 15305508 | Copper | Tin | 1.83 |
| M8 | 8.50 | 150˚ Up | 32.0 | 12191773 | Copper | Tin | 1.52 |
| M10 | 10.34 | 150˚ Up | 50.0 | 12191005 | Copper | Tin | 1.83 |
| M8 | 8.50 | 150˚ Down | 19.0-13.0 | 12146718 | Copper | Tin | 1.52 |
| M10 | 10.34 | 150˚ Down | 32.0 | 12191461 | Copper | Tin | 1.52 |

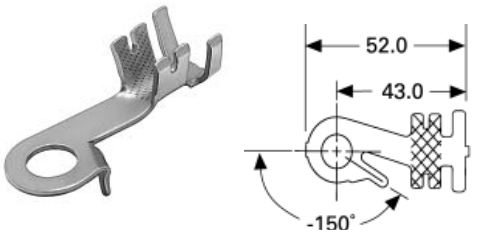


## Standard Neck Starter Terminals

| Stud Size | Hole Dia. | Tab Position | Cable Range (mm²) | Part # | Material | Plating | Stock Thickness (mm) |
|---|---|---|---|---|---|---|---|
| M8 | 8.50 | -150˚ Up | 50.0 | 12191787 | Copper | Tin | 1.83 |
| M10 | 10.34 | -150˚ Down | 32.0 | 15318209 | Copper | Tin | 1.52 |

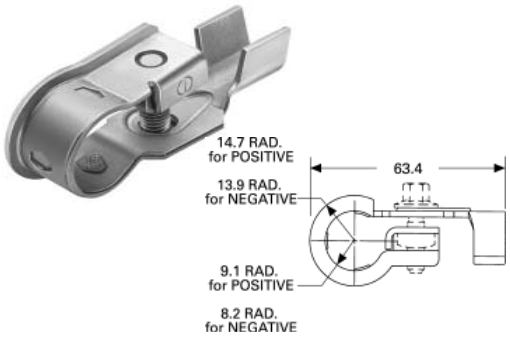


## Top Post Battery Terminals

| Application | Cable Range (mm²) | Part # | Material | Plating | Stock Thickness (mm) |
|---|---|---|---|---|---|
| Negative | 50.0 | 12177299 | Copper | Tin | 1.52 |
| Positive | 50.0 | 12177296 | Copper | Tin | 1.52 |
| Negative | 32.0 | 12177297 | Copper | Tin | 1.52 |
| Positive | 32.0 | 12177298 | Copper | Tin | 1.52 |
| Positive | 19.0 | 15305118 | Copper | Tin | 1.52 |
| Negative | 19.0 | 15305119 | Copper | Tin | 1.52 |

Fastener Bolt (12177293) and nut (12177294) are available from the manufacturer.

15492508

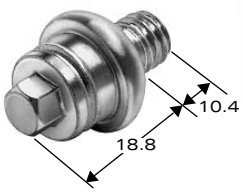


15492510

## Battery Bolts & Spacer

| Part # | Material | Plating | Spacer |
|---|---|---|---|
| 15492508 | Steel | Zinc Gold Chromate | – |
| 15492510 | Steel | Zinc Gold Chromate | 12004189 |

Coated with "Pavco" sealer to provide corrosion protection.

**NOTE:** Specifications in this catalog are for general reference only and are subject to change without notice. To verify product information, please contact a Delphi representative.

# Side Post Battery Terminals & Covers

## Side Post Battery Terminals

| Stud Size | Hole Dia. | Cable Range ($mm^2$) | Part # | Barbs* | Material | Plating | Stock Thickness (mm) |
|---|---|---|---|---|---|---|---|
| M10 | 9.90 | 62.0 | 12129221 | Yes | Copper | Tin | 1.83 |
| M10 | 9.90 | 50.0 | 12129465 | Yes | Copper | Tin | 1.83 |
| M10 | 9.90 | 32.0 | 12146466 | Yes | Copper | Tin | 1.52 |
| M10 | 9.90 | 19.0 | 12146467 | Yes | Copper | Tin | 1.52 |
| M10 | 9.90 | 13.0 | 12146464 | Yes | Copper | Tin | 1.52 |

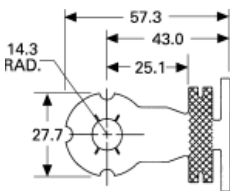

*Barbs (indentations in center hole) in terminals are used to prevent rotation after assembly. Bolts ordered separately.

## Battery Terminal Covers

| Part # | Color | Overall Length | Height | Width | Application | Material |
|---|---|---|---|---|---|---|
| 12160209 | Black | 75.7 | 25.5 | 35.0 | Single | Vinyl |
| 12160210 | Red | 75.7 | 25.5 | 35.0 | Single | Vinyl |

Used with battery bolt 15492508 or equivalent

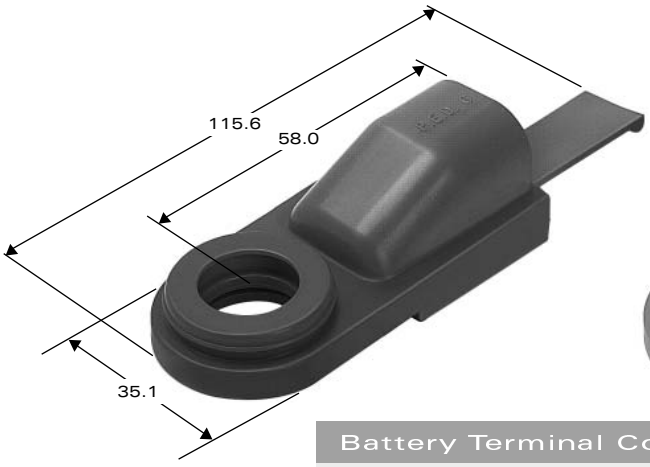

## Battery Terminal Cover Assembly*

| Part # | Color | Overall Length | Height | Width | Application | Material |
|---|---|---|---|---|---|---|
| 15304878 | Black | 115.6 | 27.5 | 35.1 | (2) Stackable | Vinyl |
| 15304876 | Red | 115.6 | 27.5 | 35.1 | (2) Stackable | Vinyl |

Used with battery bolt 15492510 or equivalent.
* Includes 12004189 Spacer.

**SECTION NOTES:**

- Covers protect the interface between the cable and the battery.

**NOTE:** Specifications in this catalog are for general reference only and are subject to change without notice. To verify product information, please contact a Delphi representative.

# Cable Seals & Cavity Plugs

Delphi designs and manufactures a wide selection of cable seals and cavity plugs for a variety of connection systems applications. The following charts captures only a few of the diverse sealing products available for your design needs. Please contact your Delphi representative for additional product selections and application information.

## 3.6mm Internal Cavity Diameter Cable Seals

| Reel Part # | Loose Part # | Cable Dia. | Material | Color |
|---|---|---|---|---|
| – | 15327913 | 1.60-1.20 | Silicone | Red |
| 15344666 | 15327918 | 2.00-1.20 | Silicone | Gray |
| – | 15339412 | 2.10-1.90 | Silicone | Yellow |
| – | 15344324 | 2.10-1.20 | Silicone | Dk. Red |
| 12191155 | 15366022 | 1.90-1.40 | Silicone | Green |
| – | 15305351 | 2.10-1.70 | Silicone | Yellow |

## 3.6mm Internal Cavity Diameter Cavity Plug

| Part # | Material | Color |
|---|---|---|
| 12198198 | Silicone | White |

## 4.0mm Internal Cavity Diameter Cable Seals

| Part # | Cable Dia. | Material | Color |
|---|---|---|---|
| – | 15366021 | 1.90-1.20 | Silicone | White |
| – | 15366060 | 2.40-1.86 | Silicone | Blue |

## 4.0mm Internal Cavity Diameter Cavity Plug

| Part # | Material | Color |
|---|---|---|
| 15305171 | Silicone | Green |

## 5.2mm Internal Cavity Diameter Cable Seals

| Reel Part # | Loose Part # | Cable Dia. | Material | Color |
|---|---|---|---|---|
| 12052925 | 15324974 | 1.70-1.29 | Silicone | Blue |
| 10731091 | 10737671 | 2.30-1.50 | Silicone | Red |
| 12089442 | 15324976 | 2.15-1.60 | Silicone | White |
| 15344643 | 15327863 | 2.70-2.00 | Silicone | Dk. Red |
| 12052924 | 15324973 | 2.85-2.03 | Silicone | Dk. Red |
| 10731090 | 10737670 | 2.40-2.20 | Silicone | Blue |
| 10720641 | 15327859 | 2.90-2.70 | Silicone | Yellow |
| 15343826 | 15339967 | 2.10-1.20 | Silicone | Blue |
| 15343827 | 15339838 | 3.00-2.20 | Silicone | White |
| 12191157 | 15366064 | 2.40-1.86 | Silicone | Purple |

## 5.2mm Internal Cavity Diameter Cavity Plugs

| Part # | Material | Color |
|---|---|---|
| 15337197 | Silicone | White |
| 10730124 | Silicone | Green |
| 12059168 | Silicone | Dk. Red |

## 5.7mm Internal Cavity Diameter Cavity Plug

| Part # | Material | Color |
|---|---|---|
| 15305170 | Silicone | White |

## 5.7mm Internal Cavity Diameter Cable Seals

| Part # | Cable Dia. | Material | Color |
|---|---|---|---|
| – | 10720941 | 2.00-1.20 | Silicone | Gray |
| – | 10720950 | 2.90-2.10 | Silicone | Yellow |

## 5.8mm Internal Cavity Diameter Cable Seals

| Reel Part # | Loose Part # | Cable Dia. | Material | Color |
|---|---|---|---|---|
| 12191221 | 15366065 | 1.90-1.20 | Silicone | Orange |
| – | 12191235 | 3.90-3.40 | Silicone | Purple |

## 5.8mm Internal Cavity Diameter Cavity Plug

| Part # | Material | Color |
|---|---|---|
| 15305170 | Silicone | White |

**SECTION NOTES:**

- Cable seals and cavity plugs are designed using multiple internal configurations. These design variations do not affect sealability.
- Your regional support representative will help you select the appropriate cable seal based on: cavity diameter, cable diameter, and crimp configuration requirements.

**NOTE:** Specifications in this catalog are for general reference only and are subject to change without notice. To verify product information, please contact a Delphi representative.

# Cable Seals & Cavity Plugs

## 6.7mm Internal Cavity Diameter Cable Seals

| Reel Part # | Loose Part # | Cable Dia. | Material | Color |
|---|---|---|---|---|
| 12034365 | 15324983 | 1.70-1.29 | Silicone | Dk. Red |
| 12089444 | 15324985 | 2.15-1.60 | Silicone | Purple |
| 12015284 | 15324982 | 2.85-2.03 | Silicone | Green |
| 12041352 | 15324984 | 2.42-2.03 | Silicone | Tan |
| 12015359 | 15324980 | 3.49-2.81 | Silicone | Gray |
| - | 10720851 | 4.20-3.50 | Silicone | Blue |

## 6.7mm Internal Cavity Diameter Cavity Plug

| Part # | Material | Color |
|---|---|---|
| 12010300 | Silicone | Green |

## 6.8mm Internal Cavity Diameter Cable Seals

| Reel Part # | Loose Part # | Cable Dia. | Material | Color |
|---|---|---|---|---|
| 10717456 | 10720611 | 2.30-1.50 | Silicone | Green |
| 10718234 | 10720613 | 3.00-2.20 | Silicone | Yellow |
| 10731103 | 10720615 | 3.70-3.40 | Silicone | White |

## 6.8mm Internal Cavity Diameter Cavity Plug

| Part # | Material | Color |
|---|---|---|
| 10720617 | Silicone | Red |

## 8.5mm Internal Cavity Diameter Cable Seals

| Reel Part # | Loose Part # | Cable Dia. | Material | Color |
|---|---|---|---|---|
| 15344644 | 15363779 | 2.00-1.20 | Silicone | Yellow |
| 12052931 | 15324991 | 2.15-1.60 | Silicone | Yellow |
| - | 15327998 | 2.70-2.00 | Silicone | Blue |
| 12048433 | 15324988 | 2.85-2.01 | Silicone | White |
| 15344645 | 15363604 | 2.90-2.00 | Silicone | White |
| 12052452 | 15324989 | 3.76-2.81 | Silicone | Red |
| 15337204 | 15327864 | 2.80-3.80 | Silicone | Dk. Red |
| 15344646 | 15363605 | 3.60-4.50 | Silicone | Green |
| 12065703 | 15324987 | 4.40-5.16 | Silicone | Orange |
| 15344104 | 15344647 | 4.40-5.10 | Silicone | Gray |

## 8.5mm Internal Cavity Diameter Cavity Plug

| Part # | Material | Color |
|---|---|---|
| 12066082 | Silicone | Green |

## 9.8mm Internal Cavity Diameter Cable Seals

| Reel Part # | Loose Part # | Cable Dia. | Material | Color |
|---|---|---|---|---|
| 12077760 | 15324997 | 2.40-1.65 | Silicone | Tan |
| 12059259 | 15324995 | 2.85-2.01 | Silicone | Dk. Red |
| 12059258 | 15324994 | 3.75-2.81 | Silicone | Gray |
| 12059260 | 15324996 | 4.50-3.61 | Silicone | Blue |
| 12059257 | 15324993 | 5.15-4.40 | Silicone | Green |

## 9.8mm Internal Cavity Diameter Cavity Plug

| Part # | Material | Color |
|---|---|---|
| 12059255 | Silicone | Green |

## 13.75mm Internal Cavity Diameter Cable Seals

| Part # | Cable Dia. | Material | Color |
|---|---|---|---|
| 15492996 | 3.00-2.20 | Silicone | Blue |
| 15327126 | 4.30-3.40 | Silicone | Dk. Red |
| 10720983 | 6.40-6.00 | Silicone | Green |
| 15470809 | 7.50-6.50 | Silicone | Yellow |

## 13.75mm Internal Cavity Diameter Cavity Plug

| Part # | Material | Color |
|---|---|---|
| 10720907 | Silicone | Green |

**NOTE:** Specifications in this catalog are for general reference only and are subject to change without notice. To verify product information, please contact a Delphi representative.

# 56 Series Device Connections

| 56 Series Female Terminals Unsealed | | | |
|---|---|---|---|
| **Part #** | **Cable Range (mm²)** | **Material** | **Plating** |
| 12124512 | 0.80-0.50 | Brass | Tin |
| 12124513 | 0.80-0.50 | Brass | Tin |
| 12124515 | 2.0-1.0 | Brass | Tin |
| 12124517 | 2.0-1.0 | Brass | Tin |
| 12124518 | 3.0 | Brass | Tin |
| 12124519 | 3.0 | Brass | Tin |
| 12124520 | 0.80-0.50 (2 Req'd.) | Brass | Tin |
| 12124522 | 2.0-1.0 (2 Req'd.) | Brass | Tin |
| 12124523 | 2.0-1.0 (2 Req'd.) | Brass | Tin |

Using a proven terminal interface technology and an enhanced crimp configuration, 56 Series Device Connections remain an industry standard. A number of standard industry device connection systems are immediately available.

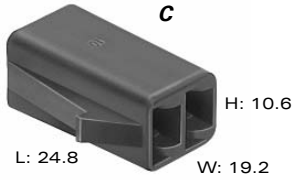


**C. Part No: 08900863**

| | |
|---|---|
| Description: | Connector 2F |
| Size: | 24.8L x 10.6H x 19.2W |
| Color: | Black |
| Material: | PP |
| Terminals: | See Above, 56 Series |
| Typical App: | Switch |

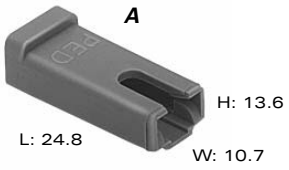


**A. Part No: 12015306**

| | |
|---|---|
| Description: | Connector 1F |
| Size: | 24.8L x 13.6H x 10.7W |
| Color: | Gray |
| Material: | PA66 HS IM |
| Terminals: | See Above, 56 Series |
| Typical App: | Switch |

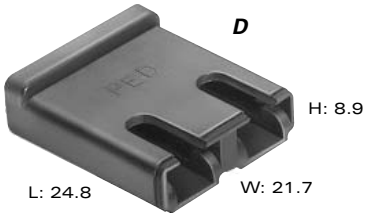


**D. Part No: 02973407**

| | |
|---|---|
| Description: | Connector 2F |
| Size: | 24.8L x 8.9H x 21.7W |
| Color: | Black |
| Material: | PP |
| Terminals: | See Above, 56 Series |
| Typical App: | Various |

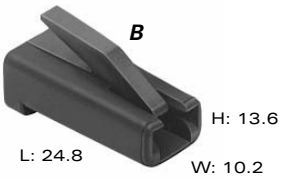


**B. Part No: 12004267**

| | |
|---|---|
| Description: | Connector 1F |
| Size: | 24.8L x 13.6H x 10.2W |
| Color: | Black |
| Material: | PP IM |
| Terminals: | See Above, 56 Series |
| Typical App: | Horn |

**SECTION NOTES:**

- Nib on terminal provides increased retention when used with specific mating blade.

**NOTE:** Specifications in this catalog are for general reference only and are subject to change without notice. To verify product information, please contact a Delphi representative.

# 56 Series Device Connections

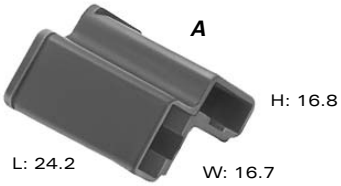


**A. Part No: 02973385**

| | |
|---|---|
| Description: | Connector 2F |
| Size: | 24.2L x 16.8H x 16.7W |
| Color: | Black |
| Material: | PP |
| Terminals: | See Page 9.10 |
| Typical App: | Various |

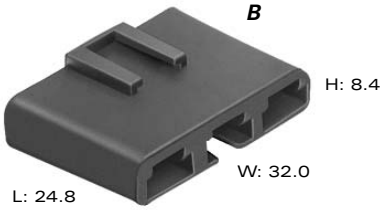


**B. Part No: 02984959**

| | |
|---|---|
| Description: | Connector 3F |
| Size: | 24.8L x 8.4H x 32.0W |
| Color: | Black |
| Material: | PP |
| Terminals: | See Page 9.10 |
| Typical App: | Various |

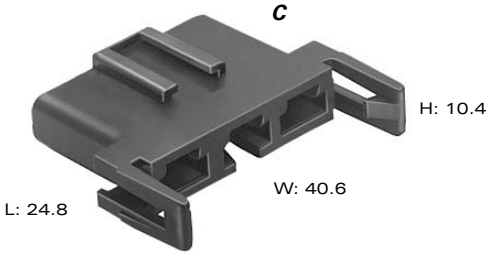


**C. Part No: 08905790**

| | |
|---|---|
| Description: | Connector 3F |
| Size: | 24.8L x 10.4H x 40.6W |
| Color: | Black |
| Material: | PP |
| Terminals: | See Page 9.10 |
| Typical App: | Switch |

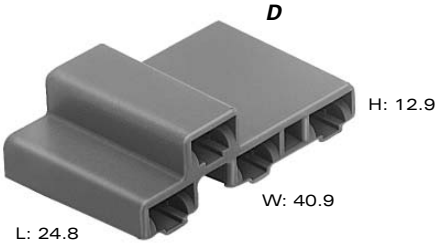


**D. Part No: 02965019**

| | |
|---|---|
| Description: | Connector 4F |
| Size: | 24.8L x 12.9H x 40.9W |
| Color: | Gray |
| Material: | PP 40%TF |
| Terminals: | See Page 9.10 |
| Typical App: | Relay |

**NOTE:** Specifications in this catalog are for general reference only and are subject to change without notice. To verify product information, please contact a Delphi representative.

# 56 Series Device Connections

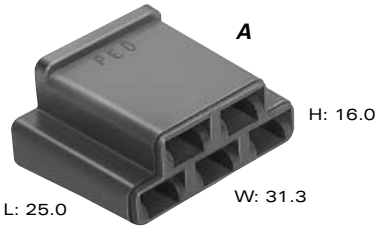


**A. Part No: 12004327**

| | |
|---|---|
| Description: | Connector 5F |
| Size: | 25.0L x 16.0H x 31.3W |
| Color: | Brown |
| Material: | PP |
| Terminals: | See Page 9.10 |
| Typical App: | Various |

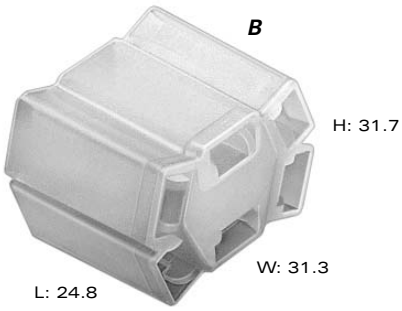


**B. Part No: 12052978**

| | |
|---|---|
| Description: | Connector 6F |
| Size: | 24.8L x 31.7H x 31.3W |
| Color: | Natural |
| Material: | PP |
| Terminals: | See Page 9.10 |
| Typical App: | Switch |

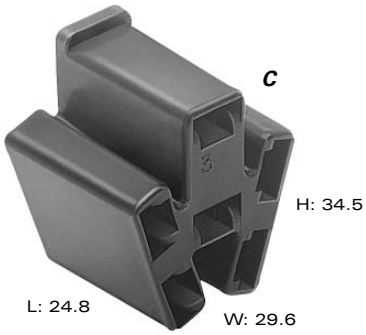


**C. Part No: 02984017**

| | |
|---|---|
| Description: | Connector 6F |
| Size: | 24.8L x 34.5H x 29.6W |
| Color: | Black |
| Material: | PP |
| Terminals: | See Page 9.10 |
| Typical App: | Switch |

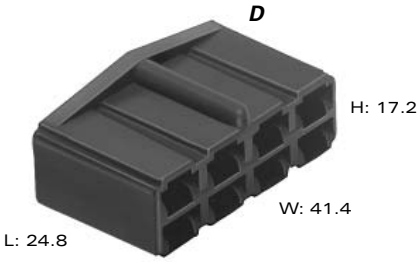


**D. Part No: 02965977**

| | |
|---|---|
| Description: | Connector 8F |
| Size: | 24.8L x 17.2H x 41.4W |
| Color: | Black |
| Material: | PP |
| Terminals: | See Page 9.10 |
| Typical App: | Various |

**NOTE:** Specifications in this catalog are for general reference only and are subject to change without notice. To verify product information, please contact a Delphi representative.

# Clips

Connectors are positively positioned within the vehicle via the use of Delphi's integral connector clips. These clips are easily assembled to the connectors and reliably remain in position. Designs incorporate features that prevent movement or rattling regardless of driving conditions.

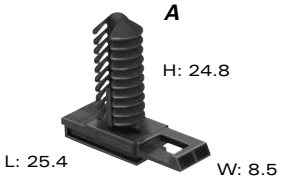


**A. Part No: 12186353**

| | |
|---|---|
| Description: | Clip (Self Locking) |
| Size: | 25.4L x 24.8H x 8.5W |
| Color: | Black |
| Material: | PA66 HS IM |

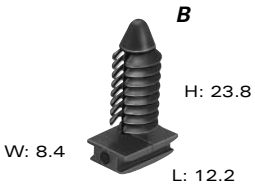


**B. Part No: 12047835**

| | |
|---|---|
| Description: | Clip |
| Size: | 12.2L x 23.8H x 8.4W |
| Color: | Black |
| Material: | PA6 |
| Note: | Attach by sonic weld (preferred) or adhesive. |

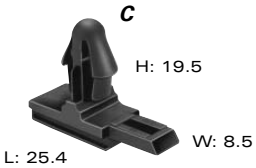


**C. Part No: 12084149 (Black)**

| | |
|---|---|
| Material: | PP IM |

**Part No: 12110290 (Gray)**

| | |
|---|---|
| Material: | PA66 HS IM |
| Description: | Clip (Self Locking) |
| Size: | 25.4L x 19.5H x 8.5W |

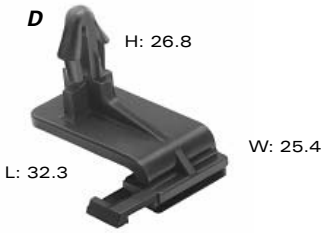


**D. Part No: 12110517**

| | |
|---|---|
| Description: | Clip (Self Locking) |
| Size: | 32.3L x 26.8H x 25.4W |
| Color: | Black |
| Material: | PA66 HS IM |

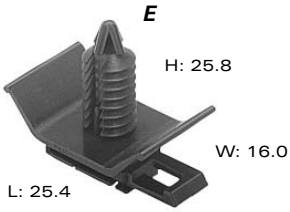


**E. Part No: 12110783**

| | |
|---|---|
| Description: | Clip (Self Locking) |
| Size: | 25.4L x 25.8H x 16.0W |
| Color: | Black |
| Material: | PA66 HS IM |

**SECTION NOTES:**

- Product information shown is a representative sample of the available plastic and metal clips.
- Self-locking clips require connectors with self-locking features.

**NOTE:** Specifications in this catalog are for general reference only and are subject to change without notice. To verify product information, please contact a Delphi representative.

# Clips

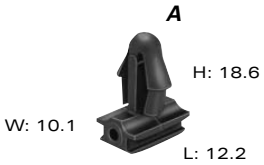


**A. Part No: 08905563**

| | |
|---|---|
| Description: | Clip |
| Size: | 12.2L x 18.6H x 10.1W |
| Color: | Black |
| Material: | PP IM |
| Note: | Attach by sonic weld (preferred) or adhesive. |

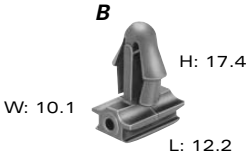


**B. Part No: 12084561**

| | |
|---|---|
| Description: | Clip |
| Size: | 12.2L x 17.4H x 10.1W |
| Color: | Gray |
| Material: | PA66 HS IM |
| Note: | Attach by sonic weld (preferred) or adhesive. |

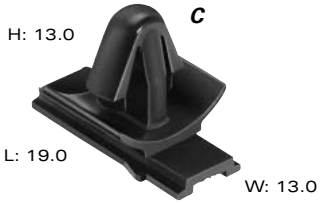


**C. Part No: 10717452**

| | |
|---|---|
| Description: | Clip (Self-Locking) |
| Size: | 19.0L x 13.0H x 13.0W |
| Color: | Black |
| Material: | PA66 |

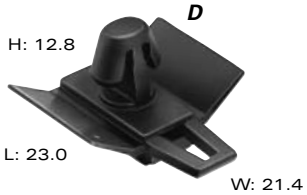


**D. Part No: 15439875**

| | |
|---|---|
| Description: | Clip (Self-Locking) |
| Size: | 23.0L x 12.8H x 21.4W |
| Color: | Black |
| Material: | PA66 |

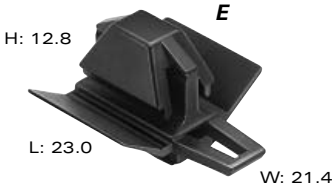


**E. Part No: 15427170**

| | |
|---|---|
| Description: | Clip (Self-Locking) |
| Size: | 23.0L x 12.8H x 21.4W |
| Color: | Black |
| Material: | PA66 |

**F. Part No: 10720007**

| | |
|---|---|
| Description: | Tube Clip (Self-Locking) |
| Size: | 19.5L x 24.0H x 21.0W |
| Color: | Black |
| Material: | PA66 |

**NOTE:** Specifications in this catalog are for general reference only and are subject to change without notice. To verify product information, please contact a Delphi representative.

# Clips

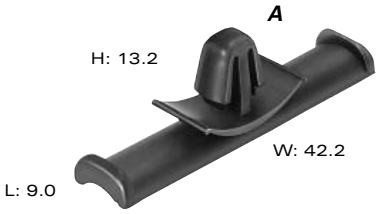


**A. Part No: 12147875**

| | |
|---|---|
| Description: | Harness Clip |
| Size: | 9.0L x 13.2H x 42.2W |
| Color: | Black |
| Material: | PA66 |

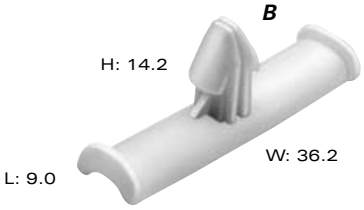


**B. Part No: 15344856**

| | |
|---|---|
| Description: | Harness Clip |
| Size: | 9.0L x 14.2H x 36.2W |
| Color: | Natural |
| Material: | PP |

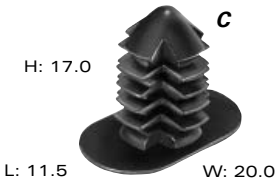


**C. Part No: 10719204**

| | |
|---|---|
| Description: | Fixing Clip |
| Size: | 11.5L x 17.0H x 20.0W |
| Color: | Black |
| Material: | PA66 |

## Metal Clips

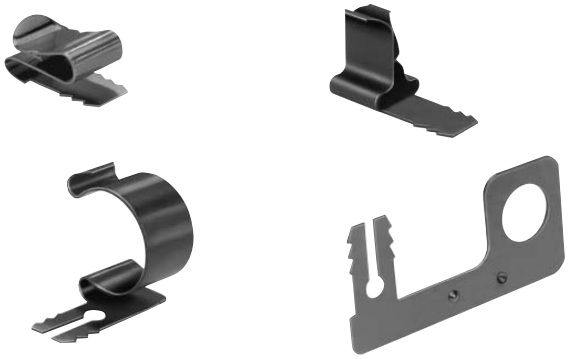

**SECTION NOTES:**

- Product information shown is a representative sample of the available plastic and metal clips.
- Self-locking clips require connectors with self-locking features.
- Attach by hand arbor or air assist machine.

**NOTE:** Specifications in this catalog are for general reference only and are subject to change without notice. To verify product information, please contact a Delphi representative.

# Connector Carriers

## A. Part No: 12185083

| | |
|---|---|
| Description: | 2 Position Carrier |
| Size: | 21.0L x 25.8H x 32.0W |
| Color: | Black |
| Material: | PA6 15% GF |

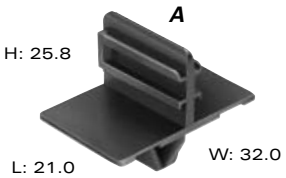


## B. Part No: 10719975

| | |
|---|---|
| Description: | 4 Position Carrier |
| Size: | 53.0L x 36.4H x 142.0W |
| Color: | Black |
| Material: | PA6 15% GF |

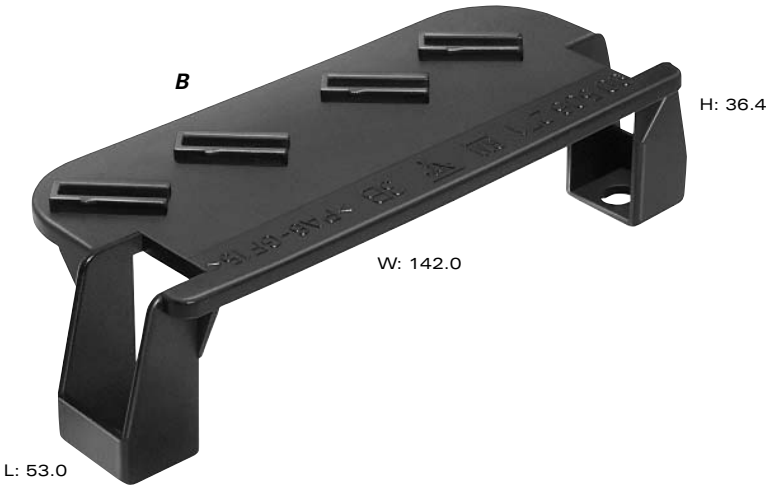


## C. Part No: 10740405

| | |
|---|---|
| Description: | 5 Position Carrier |
| Size: | 33.0L x 27.3H x 82.0W |
| Color: | Black |
| Material: | PP 20% GF |

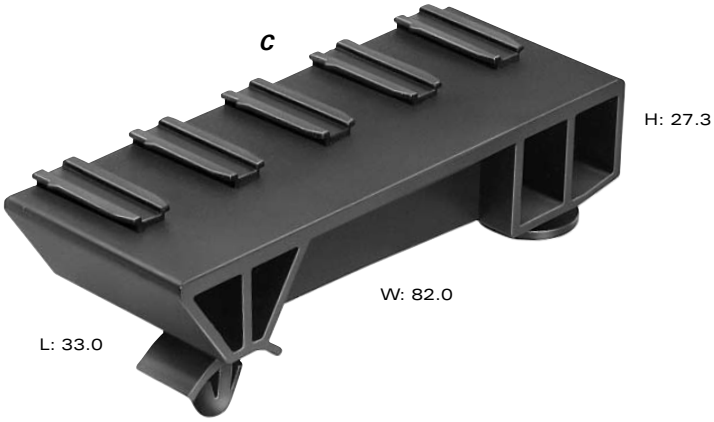


## D. Part No: 10720085

| | |
|---|---|
| Description: | 8 Position* Carrier |
| Size: | 98.0L x 37.5H x 194.5W |
| Color: | Black |
| Material: | PA6 15% GF |

*6 standard, 2 non-standard.

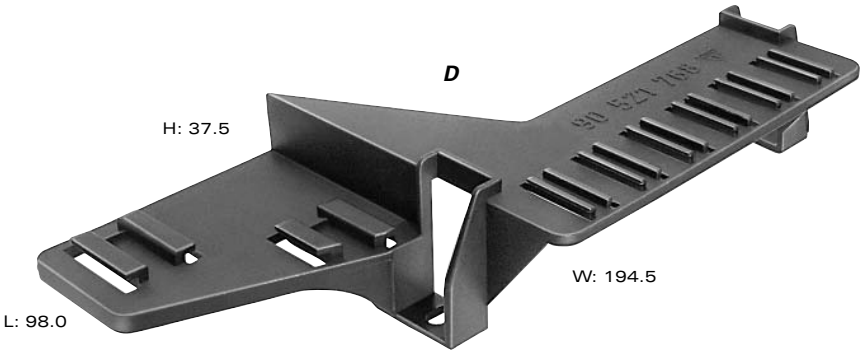


**NOTE:** Specifications in this catalog are for general reference only and are subject to change without notice. To verify product information, please contact a Delphi representative.

# Application Tooling

Delphi offers application tooling for both automatic and hand tool operations. This section highlights various presses and dies as well as some of our more common hand tools.

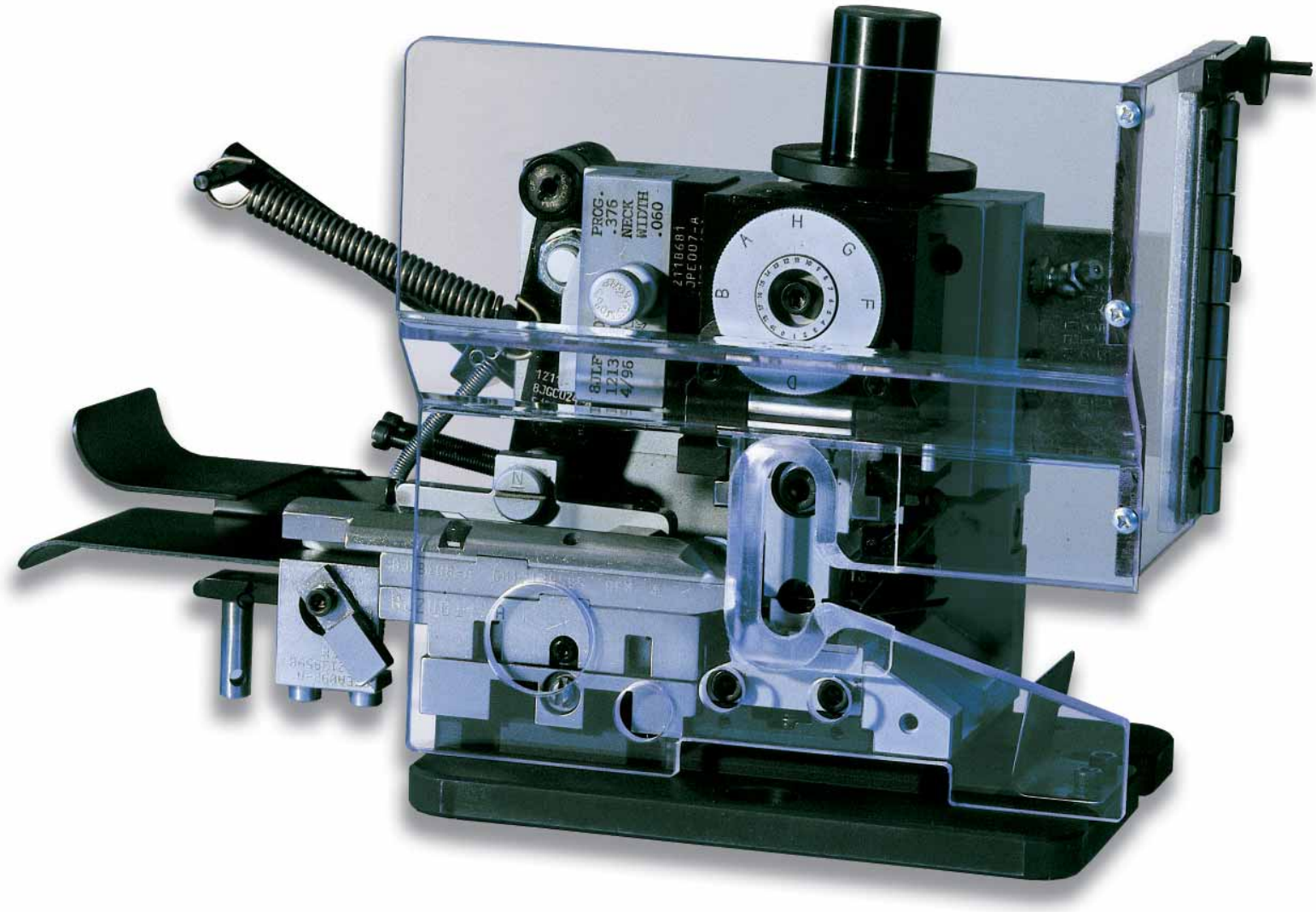


Additional information on our automatic dies and presses is available by calling North American Regional Sales and Service number:

**1-800-DIE-INFO (1-800-343-4636)**

(All other regions contact regional support representative)

Additional information on our hand tools is available by contacting your regional support representative.

# Application Tooling

### Delphi Presses:

Delphi offers two bench-style Speed-O-Matic presses.

| | |
|---|---|
| 3-ton used for: | Metri-Pack, Weather-Pack, ComPack, Micro-Pack, and Pack-Con terminals. |
| 5-ton used for: | 56/58/59 series terminals and ring terminals. |

Safety Feature:

- An optional single stroke mechanism will prevent the press from recycling if the electrical anti-repeat should fail.

Motor Features:

- 1/2 H.P. (5-Ton) or 1/3 H.P. (3-Ton). 115V, 1750 rpm, single phase, 60 cycle.

Presses may be purchased, leased or rented.
Contact your account representative.

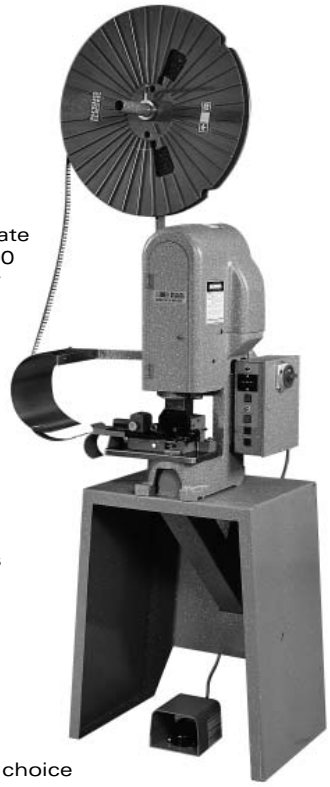

Easy maintenance

Application rate of up to 4,000 terminals per hour

Safety guard

Proven press in the connection systems industry

The press of choice for Delphi

Rugged

Factory life of over 40 years

Optional heavy-duty stand

### Delphi Speed-O-Matic Dies:

Delphi Speed-O-Matic dies used together with our Speed-O-Matic 3-Ton or 5-Ton press will allow a maximum application rate of up to 4,000 terminals per hour. Speed-O-Matic dies can be set up to run a variety of applications.

Therefore, when ordering an applicator die, please provide Delphi with the following information:

- Terminal part number
- Gauge of cable to be crimped
- Type of cable insulation

Speed-O-Matic dies may be purchased, and certain dies are also available for rental or lease. Contact your account representative.

Please see cross-reference sheet for terminal-to-die information. See Page 10.14.

Factory life of over 40 years

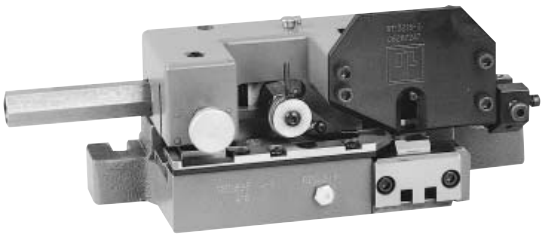

Application rate of up to 4,000 terminals per hour

Heavy-duty

**NOTE:** Specifications in this catalog are for general reference only and are subject to change without notice. To verify product information, please contact a Delphi representative.

# Application Tooling

Reliable

Flexible

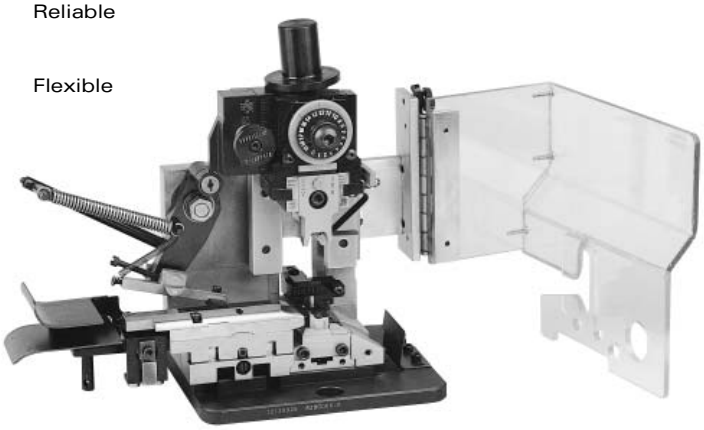

Quick and easy die changes

### Delphi E-Z Pack Die:

E-Z Pack Die can best be described as an advanced and flexible terminal application system.

Features:
- This die consists of a die base, quick change module (terminal specific), and a conversion kit that adapts the base to various presses.
- This die may be installed in Delphi's 3 or 5-ton press, or into other manufacturers' presses with an adapter kit.
- This die may be bench mounted or installed on wire processing cutter equipment.

Advantages:
- Reduces changeover time and downtime.
- Die changes are performed quickly and easily, without a need for special tools. Simply remove the tool module and insert the next module into the die base.

E-Z Pack Dies may be purchased, leased or rented. Contact your account representative.

Please see cross reference sheet for terminal-to-die information. See Page 10.14.

Efficient

Automatic cutter cycle

Optional tape dispenser

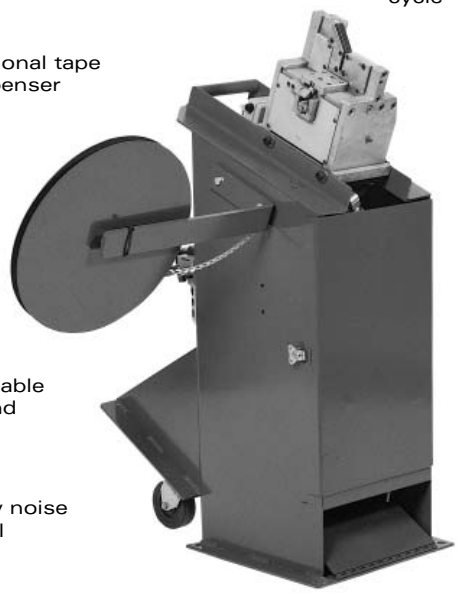

Portable stand

Low noise level

Requires minimal floor space

Optional liquid solder pot

### Delphi Low Profile Splice Die and Stand:

This air operated press and die allows splicing of two or more wire leads and provides good visibility to crimping area.

Die and stand sold as a unit.

Specifications:

| | |
|---|---|
| Overall height: | 1143mm (45 inches) |
| Overall width: | 914mm (36 inches) |
| Overall depth: | 610mm (24 inches) |

**NOTE:** Specifications in this catalog are for general reference only and are subject to change without notice. To verify product information, please contact a Delphi representative.

# Application Tooling

### Delphi Flex-Guard Conduit Cutter:

This versatile machine is designed for use both as a production line machine and for bulk conduit cutting operations.

For production line operations:

- With machine modifications, will cut up to three different lengths of conduit in any pre-determined sequence.

For bulk cutting operations:

- Will cut as many as 99,999 pieces of conduit of the same length in one continuous operation.

This cutter requires both electrical and pneumatic connections.

Specifications:

| | |
|---|---|
| Overall height: | 1854mm (73 inches) |
| Overall width: | 787mm (31 inches) |
| Overall depth: | 330mm (13 inches) |

Power Requirements:

Electrical-440 volt, 60 cycle AC, 110 volt may be requested.

Cuts various lengths

Versatile

Easy to operate

### Delphi Automatic Cable Seal Applicator:

This tool is designed to automatically apply cable seals from a continuous mylar carrier strip onto unstripped cable. Cable may range in size from 0.22mm$^2$ gauge (thin wall) to 5.0mm$^2$ gauge (heavy wall).

This applicator is designed for use on automatic cable processing equipment.

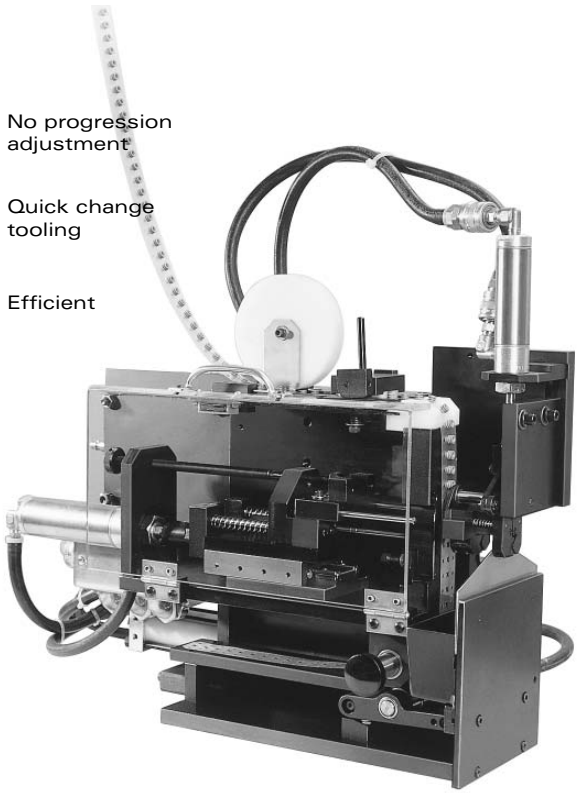

No progression adjustment

Quick change tooling

Efficient

**NOTE:** Specifications in this catalog are for general reference only and are subject to change without notice. To verify product information, please contact a Delphi representative.

# Application Tooling

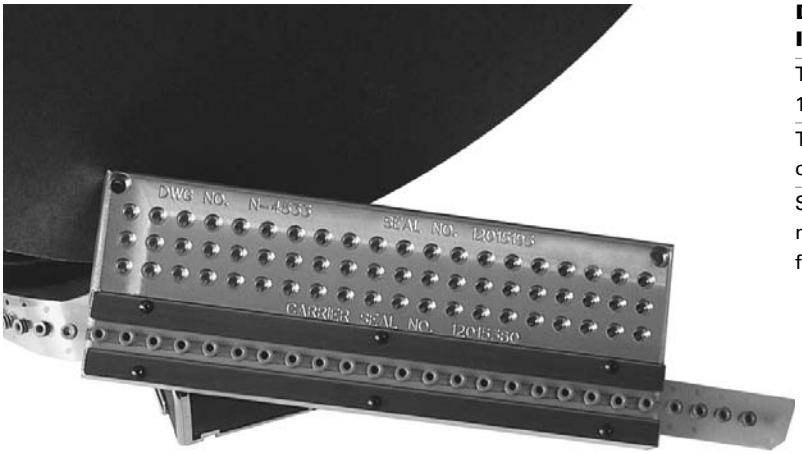


### Delphi Manual Cable Seal Insertion Block:

This block is a machined piece of aluminum, approximately 1″ thick, 6″ wide, and 12″ long.

There are 80 holes drilled to correspond to the dimensions of Delphi's various cable seals.

Seals may be inserted into the block as loose piece or on mylar tape if desired. This Seal Insertion Block is designed for lower volume applications.

### Weather-Pack 6060 Gauge as a Process Control Aid:

Specifications:

| | |
|---|---|
| Weight: | 480g (1.05 lb.) |
| Length: | 102mm (4 inches) |
| Width: | 38mm (1-1/2 inches) |
| Height: | 35mm (1-3/8 inches) |

This gauge is used as a process aid to verify that terminals are crimped and mated properly.

**NOTE:** Specifications in this catalog are for general reference only and are subject to change without notice. To verify product information, please contact a Delphi representative.

# Crimp Tools

**A. Part No: 12040070**

Application: Unsealed Doubles
Core and Insulation

Cable Range ($mm^2$): 2.0-0.50

A

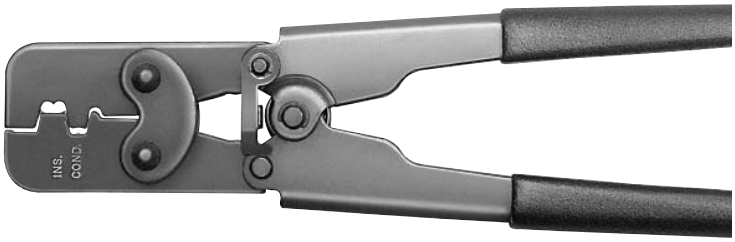


**B. Part No: 06285847**

Application: Unsealed All Purpose
Core and Insulation

Cable Range ($mm^2$): 2.0-0.50 (5.0-3.0 Core only)

B

**C. Part No: 12018777**

Application: Unsealed All Purpose
Core and Insulation

Cable Range ($mm^2$): 0.35

C

**D. Part No: 12014254**

Application: Sealed Weather Pack Pin and Sleeve
Core and Insulation

Cable Range ($mm^2$): 2.0-0.50

D

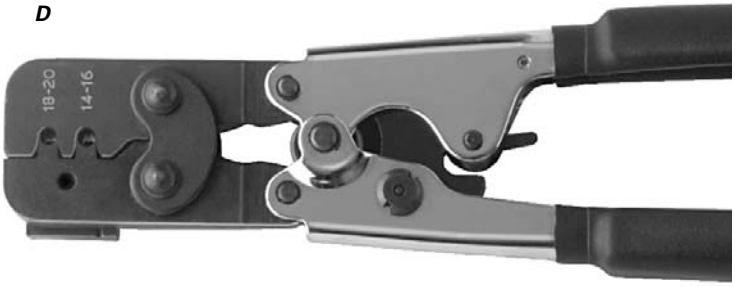


**E. Part No: 12039500**

Application: Unsealed 150 Metri-Pack, 150.1 and 150.2 Pull-To-Seat
Core and Insulation

Cable Range ($mm^2$): 1.0-0.35

E

**NOTE:** Specifications in this catalog are for general reference only and are subject to change without notice. To verify product information, please contact a Delphi representative.

# Crimp Tools

### A. Part No: 12070948

Application: Unsealed Micro-Pack 100, Female only
Core and Insulation

Cable Range ($mm^2$): 2.0-0.35

A

### B. Part No: 12070947

Application: Unsealed Metri-Pack, Female only
Core and Insulation

Cable Range ($mm^2$): 5.0-3.0

B

### C. Part No: 12071687

Application: Sealed 480 & 630 Metri-Pack
Core and Insulation

Cable Range ($mm^2$): 5.0-3.0

C

### D. Part No: 12125080

Application: Micro-Pack 100W
Core and Insulation

Cable Range ($mm^2$): 0.80-0.35

D

### E. Part No: 12155975

Application: Sealed 150 & 280 Metri-Pack
Core and Insulation

Cable Range ($mm^2$): 2.0-0.50

E

**SECTION NOTES:**

- Hand crimp tools are designed for repair, prototype or low volume usage.
- Solder with resin core solder to guarantee crimp integrity.

**NOTE:** Specifications in this catalog are for general reference only and are subject to change without notice. To verify product information, please contact a Delphi representative.

# Terminal Removal

### A. Part No: 12014012

| | |
|---|---|
| Application: | Weather-Pack Male and Female |
| Handle Color: | Clear Yellow |
| Button Color: | White |

A

### B. Part No: 12031876

| | |
|---|---|
| Application: | Micro-Pack 100 Female |
| Handle Color: | Red |
| Button Color: | Black |

B

### C. Part No: 12094429

| | |
|---|---|
| Application: | GT 150; GT 280; 150 Metri-Pack; 280 Metri-Pack; 280 Tangless & 280 Bus Bar; 630 Pull-To-Seat; Lamp Socket Bases, B-1 & W-3; 800 Metri-Pack Female |
| Handle Color: | Green |
| Button Color: | White |

C

### D. Part No: 12094430

| | |
|---|---|
| Application: | 56 Series; 280 Metri-Pack; 480 Metri-Pack; 630 Metri-Pack; 800 Metri-Pack Male Tangless; Lamp Socket Bases, W-2 & C-2 |
| Handle Color: | Blue |
| Button Color: | White |

D

### E. Part No: 12122523

| | |
|---|---|
| Application: | Micro-Pack 100W; 24Way Female 12129225; 32Way Female 12129025; 36Way Female 12110487 |
| Handle Color: | Gray |
| Button Color: | Black |

E

### F. Part No: 12150860

| | |
|---|---|
| Application: | 800 MAXI™ Fuse Female |
| Handle Color: | Blue |
| Button Color: | Blue |

F

**NOTE:** Specifications in this catalog are for general reference only and are subject to change without notice. To verify product information, please contact a Delphi representative.

# Terminal Removal

A

**A. Part No: 12151195**

| | |
|---|---|
| Application: | 280 Metri-Pack 2Way Bus Bar |
| Handle Color: | Clear |
| Button Color: | Black |

B

**B. Part No: 12151194**

| | |
|---|---|
| Application: | 280 Metri-Pack 3Way Bus Bar |
| Handle Color: | Clear |
| Button Color: | Red |

C

**C. Part No: 12151193**

| | |
|---|---|
| Application: | 280 Metri-Pack 4Way Bus Bar |
| Handle Color: | Clear |
| Button Color: | Blue |

D

**D. Part No: 12152395**

| | |
|---|---|
| Application: | 280 Metri-Pack 5Way Bus Bar |
| Handle Color: | Clear |
| Button Color: | Green (Flat) |

**NOTE:** Specifications in this catalog are for general reference only and are subject to change without notice. To verify product information, please contact a Delphi representative.

# Terminal Removal

**A. Part No: 10739582**

Application: Ducon 0.8

Handle Color: Black

*A*

**B. Part No: 10739605**

Application: Ducon 1.5 and 2.8 One Tang

Handle Color: Black

*B*

**C. Part No: 10739583**

Application: Ducon 1.5 Two Tang

Handle Color: Black

*C*

**D. Part No: 10739584**

Application: Ducon 2.8 Two Tang

Handle Color: Black

*D*

**NOTE:** Specifications in this catalog are for general reference only and are subject to change without notice. To verify product information, please contact a Delphi representative.

# Terminal Removal

**A. Part No: 10739585**

Application: Ducon 4.8 and 6.3

Handle Color: Black

**B. Part No: 10714774**

Application: VF 2.8

Handle Color: Black

**C. Part No: 10714792**

Application: VF 6.3

Handle Color: Black

**NOTE:** Specifications in this catalog are for general reference only and are subject to change without notice. To verify product information, please contact a Delphi representative.

# Hand Tools

**A. Part No: 12122727**

| | |
|---|---|
| Application: | Cavity Plug Insertion Tool<br>150 Metri-Pack Series |
| Handle Color: | Clear |
| Button Color: | Green |

A

**B. Part No: 12121897**

| | |
|---|---|
| Application: | Cavity Plug Insertion Tool<br>280 Metri-Pack Series |
| Handle Color: | Yellow |
| Button Color: | Blue |

B

**C. Part No: 12123162**

| | |
|---|---|
| Application: | Cavity Plug Insertion Tool<br>480 Metri-Pack Series |
| Handle Color: | Yellow |
| Button Color: | Green |

C

**D. Part No: 12122584**

| | |
|---|---|
| Application: | Cavity Plug Insertion Tool<br>630 Metri-Pack Series |
| Handle Color: | Clear |
| Button Color: | Red |

D

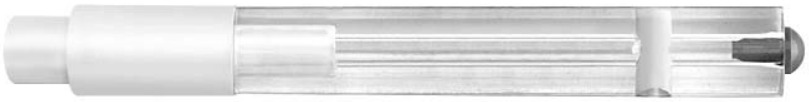

**E. Part No: 12150547**

| | |
|---|---|
| Application: | Cavity Plug Removal Tool<br>630 Metri-Pack Series |
| Handle Color: | Blue |
| Button Color: | Green |

E

**F. Part No: 12075402**

| | |
|---|---|
| Application: | Lamp Socket Insert Removal Tool<br>for W-3 Right Angle Wedge Base |

F

**NOTE:** Specifications in this catalog are for general reference only and are subject to change without notice. To verify product information, please contact a Delphi representative.

# Hand Tools

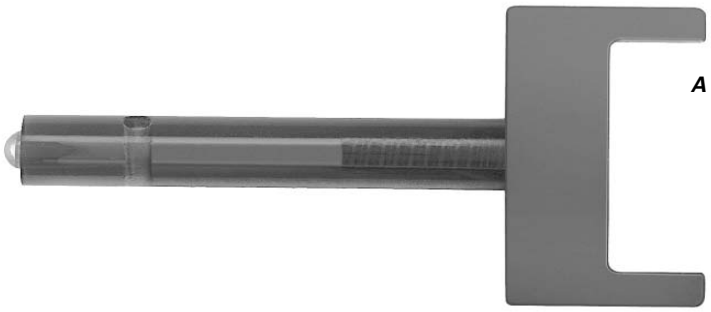


**A. Part No: 12180082**

| | |
|---|---|
| Application: | Retainer Removal Tool for 100W Connector 24Way 12129225 |
| Handle Color: | Blue |
| Button Color: | Red |

**B. Part No: 12152019**

| | |
|---|---|
| Application: | Retainer Removal Tool for 100W Connector 32Way 12129025 |
| Handle Color: | Gray |
| Button Color: | Black |

**C. Part No: 15313892**

| | |
|---|---|
| Application: | GT Male Terminal Stabilizer Removal Tool |
| Handle Color: | Blue |
| Button Color: | White |

**D. Part No: 12094441**

| | |
|---|---|
| Application: | All Purpose Large Secondary Lock/ TPA Removal Tool |
| Handle Color: | Red |
| Button Color: | White |

**E. Part No: 12122647**

| | |
|---|---|
| Application: | All Purpose Small Secondary Lock/ TPA Removal Tool |
| Handle Color: | Red |
| Button Color: | Red |

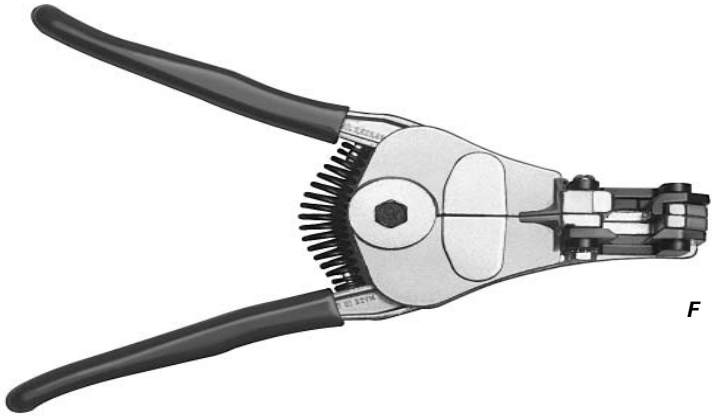


**F. Part No: 12018256**

| | |
|---|---|
| Application: | Wire Insulation Stripper |
| Handle Color: | Blue |
| Cable Range ($mm^2$): | 8.0-0.35 |

**NOTE:** Specifications in this catalog are for general reference only and are subject to change without notice. To verify product information, please contact a Delphi representative.

# Terminal/Crimp Applicator Cross Reference

| Part Number | After Termination Part Number | Terminal Description | Speed-O-Matic Die Part Number | E-Z Pack Die Available |
|---|---|---|---|---|
| 12015858 | | 280 Metri-Pack Series - Unsealed | 12018253 | yes |
| 12015860 | | 480 Metri-Pack Series - Unsealed | 12018253 | yes |
| 12015864 | | 630 Metri-Pack Series for Relay application - Unsealed | 12018253 | yes |
| 12015865 | | 630 Metri-Pack Series for Relay application - Unsealed | 12018253 | yes |
| 12015869 | | 630 Metri-Pack Series - Unsealed | 12018253 | yes |
| 12015870 | | 630 Metri-Pack Series - Unsealed | 12018253 | yes |
| 12020035 | | 630 Metri-Pack Series - Unsealed | 12018253 | yes |
| 12020116 | | 280 Metri-Pack Series - Unsealed | 12018253 | yes |
| 12020119 | | 480 Metri-Pack Series - Unsealed | 12018253 | yes |
| 12020120 | | 480 Metri-Pack Series - Unsealed | 12018253 | yes |
| 12020125 | | 630 Metri-Pack Series - Unsealed | 12018253 | yes |
| 12020126 | | 630 Metri-Pack Series - Unsealed | 12018253 | yes |
| 12020156 | | 630 Metri-Pack Series - Pull-To-Seat - Sealed | 12018253 | yes |
| 12020335 | | 630 Metri-Pack Series - Unsealed | 12018253 | yes |
| 12020365 | | 630 Metri-Pack Series - Unsealed | 12018253 | yes |
| 12020366 | | 480 Metri-Pack Series - Unsealed | 12018253 | yes |
| 12020782 | | 280 Metri-Pack Series - Unsealed | 12018253 | yes |
| 12020784 | | 480 Metri-Pack Series - Unsealed | 12018253 | no |
| 12020801 | | Weather-Pack Series - Sealed | 12012249 | yes |
| 12033820 | | 480 Metri-Pack Series - Unsealed | 12018253 | yes |
| 12033972 | | 630 Metri-Pack Series - Unsealed | 12018253 | no |
| 12033997 | | 630 Metri-Pack Series - Pull-To-Seat - Sealed | 12018253 | yes |
| 12034046 | | 280 Metri-Pack Series - Unsealed | 12018253 | yes |
| 12034047 | | 280 Metri-Pack Series - Unsealed | 12018253 | yes |
| 12040902 | | 100 Micro-Pack Series - Unsealed | 12039723 | no |
| 12045773 | | 150 Metri-Pack Series - Sealed | 12012249 | yes |
| 12047581 | | 150 Metri-Pack Series - Unsealed | 12018951 | yes |
| 12047767 | | 150 Metri-Pack Series - Unsealed | 12018951 | yes |
| 12048074 | | 150 Metri-Pack Series - Sealed | 12012249 | yes |
| 12048159 | | 280 Metri-Pack Series - Sealed | 12012249 | yes |
| 12048254 | | 280 Metri-Pack Series - Sealed | 12012249 | yes |
| 12048450 | | 480 Metri-Pack Series - Unsealed | 12039880 | no |
| 12048451 | | 480 Metri-Pack Series - Unsealed | 12039880 | no |
| 12052139 | | 480 Metri-Pack Series - Unsealed | 12039880 | no |
| 12052172 | | 480 Metri-Pack Series - Unsealed | 12039969 | no |
| 12052217 | | 280 Metri-Pack Series - Unsealed | 12018253 | yes |
| 12052219 | | 480 Metri-Pack Series - Unsealed | 12018253 | yes |
| 12052221 | | 480 Metri-Pack Series - Unsealed | 12018253 | yes |
| 12052222 | | 630 Metri-Pack Series - Unsealed | 12018253 | yes |
| 12052224 | | 630 Metri-Pack Series - Unsealed | 12018253 | yes |
| 12052225 | | 630 Metri-Pack Series for Relay application - Unsealed | 12018253 | yes |
| 12052227 | | 630 Metri-Pack Series for Relay application - Unsealed | 12018253 | yes |
| 12052455 | | 630 Metri-Pack Series - Sealed | 12039880 | no |
| 12052456 | | 630 Metri-Pack Series - Sealed | 12039880 | no |
| 12052457 | | 630 Metri-Pack Series - Sealed | 12039880 | no |
| 12052826 | | 630 Metri-Pack Series - Unsealed | 12018253 | yes |
| 12052827 | | 480 Metri-Pack Series - Unsealed | 12018253 | yes |
| 12059894 | | 150 Metri-Pack Series - Unsealed | 12018951 | yes |
| 12064734 | | 630 Metri-Pack Series - Sealed | 12039969 | no |
| 12064735 | | 630 Metri-Pack Series - Sealed | 12039969 | no |
| 12064736 | | 630 Metri-Pack Series - Sealed | 12039969 | no |
| 12064737 | | 630 Metri-Pack Series - Sealed | 12039969 | no |
| 12064971 | | 150 Metri-Pack Series - Unsealed | 12018951 | yes |
| 12065196 | | 480 Metri-Pack Series - Unsealed | 12039969 | no |
| 12065197 | | 480 Metri-Pack Series - Unsealed | 12039969 | no |
| 12065892 | | 480 Metri-Pack Series for Relay application - Unsealed | 12040128 | yes |
| 12065893 | | 480 Metri-Pack Series for Relay application - Unsealed | 12040128 | yes |
| 12065894 | | 480 Metri-Pack Series for Relay application - Unsealed | 12040128 | yes |
| 12065915 | | 800 MAXI Fuse - Unsealed | 12071239 | yes |

**NOTE:** Specifications in this catalog are for general reference only and are subject to change without notice. To verify product information, please contact a Delphi representative.

# Terminal/Crimp Applicator Cross Reference

| Part Number | After Termination Part Number | Terminal Description | Speed-O-Matic Die Part Number | E-Z Pack Die Available |
|---|---|---|---|---|
| 12065916 | | 800 MAXI Fuse - Unsealed | 12071239 | yes |
| 12065918 | | 800 MAXI Fuse - Unsealed | 12071239 | yes |
| 12066214 | | 280 Metri-Pack Series - Unsealed | 12018253 | yes |
| 12066269 | | 480 Metri-Pack Series - Unsealed | 12018253 | yes |
| 12066271 | | 280 Metri-Pack Series - Unsealed | 12018253 | yes |
| 12066454 | | 630 Metri-Pack Series - Unsealed | 12018253 | yes |
| 12066493 | | 630 Metri-Pack Series - Unsealed | 12018253 | yes |
| 12066614 | | 630 Metri-Pack Series - Pull-To-Seat - Sealed | 12018253 | yes |
| 12066638 | | W2-W3 Lamp Socket Series - Sealed | 12012249 | yes |
| 12066639 | | W2-W3 Lamp Socket Series - Sealed | 12012249 | yes |
| 12077411 | | 280 Metri-Pack Series - Sealed | 12012249 | yes |
| 12077413 | | 280 Metri-Pack Series - Sealed | 12012249 | yes |
| 12077628 | | 150 Metri-Pack Series - Sealed | 12012249 | yes |
| 12077939 | | 280 Metri-Pack Series - Pull-To-Seat - Sealed | 12018951 | yes |
| 12084200 | | 150 Metri-Pack Series - Sealed | 12012249 | yes |
| 12084201 | | 280 Metri-Pack Series - Sealed | 12012249 | yes |
| 12084449 | | 100 Micro-Pack Series - Unsealed | 12039723 | no |
| 12084586 | | 280 Metri-Pack Series - Unsealed | 12018253 | yes |
| 12084588 | | 630 Metri-Pack Series for Relay application - Unsealed | 12018253 | yes |
| 12084590 | | 630 Metri-Pack Series - Unsealed | 12018253 | yes |
| 12084595 | | 480 Metri-Pack Series - Unsealed | 12018253 | yes |
| 12084596 | | 630 Metri-Pack Series - Unsealed | 12018253 | yes |
| 12084912 | | 100W Micro-Pack Series - Sealed | 12040128 | yes |
| 12084913 | | 100W Micro-Pack Series - Sealed | 12040128 | yes |
| 12089040 | | Weather-Pack Series - Sealed | 12012249 | yes |
| 12089188 | | Weather-Pack Series - Sealed | 12012249 | yes |
| 12089236 | | 480 Metri-Pack Series for Relay application - Unsealed | 12040128 | yes |
| 12089307 | | Weather-Pack Series - Sealed | 12012249 | yes |
| 12092444 | | 800 MAXI Fuse - Unsealed | 12071239 | yes |
| 12092445 | | 800 MAXI Fuse - Unsealed | 12071239 | no |
| 12103360 | | 280 Metri-Pack Series - Pull-To-Seat - Sealed | 12018951 | yes |
| 12103501 | | Ring - Unsealed | 06286013 | no |
| 12103502 | | Ring - Unsealed | 06286013 | no |
| 12103503 | | Ring - Unsealed | 06286013 | no |
| 12103504 | | Ring - Unsealed | 06286013 | no |
| 12103505 | | Ring - Unsealed | 06286013 | no |
| 12103506 | | Ring - Unsealed | 06286013 | no |
| 12103507 | | Ring - Unsealed | 06286013 | no |
| 12103508 | | Ring - Unsealed | 06286013 | no |
| 12103509 | | Ring - Unsealed | 06286013 | no |
| 12103510 | | Ring - Unsealed | 06286013 | no |
| 12103511 | | Ring - Unsealed | 06286013 | no |
| 12103512 | | Ring - Unsealed | 08910204 | no |
| 12103513 | | Ring - Unsealed | 08910204 | no |
| 12103514 | | Ring - Unsealed | 08910162 | no |
| 12103515 | | Ring - Unsealed | 08910162 | no |
| 12103516 | | Ring - Unsealed | 08910162 | no |
| 12103517 | | Ring - Unsealed | 06292518 | no |
| 12103518 | | Ring - Unsealed | 06292518 | no |
| 12103519 | | Ring - Unsealed | 06292518 | no |
| 12103520 | | Ring - Unsealed | 06292518 | no |
| 12103948 | | 480 Metri-Pack Series for Relay application - Unsealed | 12040128 | yes |
| 12103965 | | Ring - Unsealed | 06286013 | no |
| 12110127 | | 800 MAXI Fuse - Unsealed | 12071239 | yes |
| 12110128 | | 800 MAXI Fuse - Unsealed | 12071239 | yes |
| 12110644 | 12110648 | 280 Metri-Pack Series - 1 way Bus Bar -Tangless - Unsealed | 12118476 | no |
| 12110645 | 12110649 | 280 Metri-Pack Series - 1 way Bus Bar -Tangless - Unsealed | 12118476 | no |
| 12110645 | 12110650 | 280 Metri-Pack Series - 2 way Bus Bar -Tangless - Unsealed | 12118477 | no |
| 12110645 | 12110651 | 280 Metri-Pack Series - 3 way Bus Bar -Tangless - Unsealed | 12118477 | no |
| 12110646 | 12110652 | 280 Metri-Pack Series - 1 way Bus Bar -Tangless - Unsealed | 12118476 | no |

**NOTE:** Specifications in this catalog are for general reference only and are subject to change without notice. To verify product information, please contact a Delphi representative.

# Terminal/Crimp Applicator Cross Reference

| Part Number | After Termination Part Number | Terminal Description | Speed-O-Matic Die Part Number | E-Z Pack Die Available |
|---|---|---|---|---|
| 12110646 | 12110653 | 280 Metri-Pack Series - 2 way Bus Bar -Tangless - Unsealed | 12118477 | no |
| 12110646 | 12110654 | 280 Metri-Pack Series - 3 way Bus Bar -Tangless - Unsealed | 12118477 | no |
| 12110646 | 12110655 | 280 Metri-Pack Series - 4 way Bus Bar -Tangless - Unsealed | 12118477 | no |
| 12110646 | 12110656 | 280 Metri-Pack Series - 5 way Bus Bar -Tangless - Unsealed | 12118477 | no |
| 12110647 | 12110657 | 280 Metri-Pack Series - 1 way Bus Bar -Tangless - Unsealed | 12118476 | no |
| 12110647 | 12110658 | 280 Metri-Pack Series - 2 way Bus Bar -Tangless - Unsealed | 12118477 | no |
| 12110647 | 12110659 | 280 Metri-Pack Series - 3 way Bus Bar -Tangless - Unsealed | 12118477 | no |
| 12110647 | 12110660 | 280 Metri-Pack Series - 4 way Bus Bar -Tangless - Unsealed | 12118477 | no |
| 12110647 | 12110661 | 280 Metri-Pack Series - 5 way Bus Bar -Tangless - Unsealed | 12118477 | no |
| 12110662 | 12110663 | 280 Metri-Pack Series - 1 way Bus Bar -Tangless - Unsealed | 12118476 | no |
| 12110664 | 12110665 | 280 Metri-Pack Series - 1 way Bus Bar -Tangless - Unsealed | 12118476 | no |
| 12110685 | 12110686 | 280 Metri-Pack Series - 1 way Bus Bar -Tangless - Unsealed | 12118476 | no |
| 12110700 | | 800 MAXI Fuse - Unsealed | 12071239 | no |
| 12110708 | 12110711 | 280 Metri-Pack Series - 2 way Bus Bar - Unsealed | 12118477 | no |
| 12110708 | 12110712 | 280 Metri-Pack Series - 3 way Bus Bar - Unsealed | 12118477 | no |
| 12110709 | 12110713 | 280 Metri-Pack Series - 2 way Bus Bar - Unsealed | 12118477 | no |
| 12110709 | 12110714 | 280 Metri-Pack Series - 3 way Bus Bar - Unsealed | 12118477 | no |
| 12110709 | 12110715 | 280 Metri-Pack Series - 4 way Bus Bar - Unsealed | 12118477 | no |
| 12110709 | 12110716 | 280 Metri-Pack Series - 5 way Bus Bar - Unsealed | 12118477 | no |
| 12110710 | 12110717 | 280 Metri-Pack Series - 2 way Bus Bar - Unsealed | 12118477 | no |
| 12110710 | 12110718 | 280 Metri-Pack Series - 3 way Bus Bar - Unsealed | 12118477 | no |
| 12110710 | 12110719 | 280 Metri-Pack Series - 4 way Bus Bar - Unsealed | 12118477 | no |
| 12110710 | 12110720 | 280 Metri-Pack Series - 5 way Bus Bar - Unsealed | 12118477 | no |
| 12110842 | | 280 Metri-Pack Series -Tangless - Unsealed | 12018253 | yes |
| 12110843 | | 280 Metri-Pack Series -Tangless - Unsealed | 12018253 | yes |
| 12110844 | | 280 Metri-Pack Series -Tangless - Unsealed | 12018253 | yes |
| 12110845 | | 280 Metri-Pack Series -Tangless - Sealed | 12012249 | yes |
| 12110846 | | 280 Metri-Pack Series -Tangless - Sealed | 12012249 | yes |
| 12110847 | | 280 Metri-Pack Series -Tangless - Sealed | 12012249 | yes |
| 12110853 | | 280 Metri-Pack Series -Tangless - Sealed | 12012249 | yes |
| 12124075 | | 150.2 Metri-Pack Series - Pull-To-Seat - Sealed | 12040128 | yes |
| 12124076 | | 150.2 Metri-Pack Series - Pull-To-Seat - Sealed | 12040128 | yes |
| 12124304 | | 480 Metri-Pack Series - Unsealed | 12018253 | yes |
| 12124471 | | W-2 Lamp Socket Series - Sealed | 12071239 | yes |
| 12124512 | | 56 Series - Unsealed | 12018253 | yes |
| 12124513 | | 56 Series - Unsealed | 12018253 | yes |
| 12124515 | | 56 Series - Unsealed | 12018253 | yes |
| 12124517 | | 56 Series - Unsealed | 12018253 | yes |
| 12124518 | | 56 Series - Unsealed | 12018253 | yes |
| 12124519 | | 56 Series - Unsealed | 12018253 | yes |
| 12124520 | | 56 Series - Unsealed | 12018253 | yes |
| 12124522 | | 56 Series - Unsealed | 12018253 | yes |
| 12124523 | | 56 Series - Unsealed | 12018253 | yes |
| 12124559 | | 630 Metri-Pack Series for Relay application - Unsealed | 12018253 | yes |
| 12124580 | | Weather-Pack Series - Sealed | 12012249 | yes |
| 12124581 | | Weather-Pack Series - Sealed | 12012249 | yes |
| 12124582 | | Weather-Pack Series - Sealed | 12012249 | yes |
| 12124587 | | Weather-Pack Series - Sealed | 12012249 | yes |
| 12124598 | | W-2 Lamp Socket Series - Sealed | none | yes |
| 12124977 | | 280 Metri-Pack Series - Sealed | 12012249 | no |
| 12129052 | | B1-C2 Lamp Socket Series - Sealed | 12118726 | no |
| 12129053 | | B1-C2 Lamp Socket Series - Sealed | 12012249 | yes |
| 12129061 | | 280 Metri-Pack Series -Tangless - Unsealed | 12018253 | yes |
| 12129373 | | 150 Metri-Pack Series -Tangless - Unsealed | 12018951 | yes |
| 12129409 | | 280 Metri-Pack Series -Tangless - Sealed | 12012249 | yes |
| 12129424 | | 280 Metri-Pack Series -Tangless - Unsealed | 12018253 | yes |
| 12129425 | | 280 Metri-Pack Series -Tangless - Unsealed | 12018253 | yes |
| 12129484 | | 150 Metri-Pack Series -Tangless - Unsealed | 12018951 | no |
| 12129493 | | 280 Metri-Pack Series - Sealed | 12012249 | yes |

**NOTE:** Specifications in this catalog are for general reference only and are subject to change without notice. To verify product information, please contact a Delphi representative.

# Terminal/Crimp Applicator Cross Reference

| Part Number | After Termination Part Number | Terminal Description | Speed-O-Matic Die Part Number | E-Z Pack Die Available |
|---|---|---|---|---|
| 12129494 | | 280 Metri-Pack Series - Unsealed | 12018253 | yes |
| 12129497 | | 280 Metri-Pack Series - Sealed | 12012249 | yes |
| 12129498 | | 280 Metri-Pack Series - Unsealed | 12018253 | yes |
| 12129663 | | 280 Metri-Pack Series -Tangless - Unsealed | 12018253 | yes |
| 12146447 | | 100 Micro-Pack Series - Unsealed | 12018951 | no |
| 12146448 | | 100 Micro-Pack Series - Unsealed | 12018951 | no |
| 12160222 | | 150 Metri-Pack Series - Sealed | 12012249 | yes |
| 12160223 | | 150 Metri-Pack Series - Sealed | 12012249 | yes |
| 12160635 | 12160643 | 280 Metri-Pack Series - 1 way Bus Bar - Unsealed | 12095585 | no |
| 12160635 | 12160648 | 280 Metri-Pack Series - 2 way Bus Bar - Unsealed | 12014021 | no |
| 12160635 | 12160652 | 280 Metri-Pack Series - 3 way Bus Bar - Unsealed | 12014021 | no |
| 12160635 | 12160657 | 280 Metri-Pack Series - 4 way Bus Bar - Unsealed | 12014021 | no |
| 12160635 | 12160660 | 280 Metri-Pack Series - 5 way Bus Bar - Unsealed | 12014021 | no |
| 12160635 | 12160662 | 280 Metri-Pack Series - 6 way Bus Bar - Unsealed | 12014021 | no |
| 12160636 | 12160644 | 280 Metri-Pack Series - 1 way Bus Bar - Unsealed | 12095585 | no |
| 12160636 | 12160649 | 280 Metri-Pack Series - 2 way Bus Bar - Unsealed | 12014021 | no |
| 12160636 | 12160653 | 280 Metri-Pack Series - 3 way Bus Bar - Unsealed | 12014021 | no |
| 12160636 | 12160658 | 280 Metri-Pack Series - 4 way Bus Bar - Unsealed | 12014021 | no |
| 12160636 | 12160661 | 280 Metri-Pack Series - 5 way Bus Bar - Unsealed | 12014021 | no |
| 12160637 | 12160645 | 280 Metri-Pack Series - 1 way Bus Bar - Unsealed | 12095585 | no |
| 12160637 | 12160650 | 280 Metri-Pack Series - 2 way Bus Bar - Unsealed | 12014021 | no |
| 12160637 | 12160654 | 280 Metri-Pack Series - 3 way Bus Bar - Unsealed | 12014021 | no |
| 12160638 | 12160646 | 280 Metri-Pack Series - 1 way Bus Bar - Unsealed | 12095585 | no |
| 12160638 | 12160655 | 280 Metri-Pack Series - 3 way Bus Bar - Unsealed | 12014021 | no |
| 12160640 | 12160663 | 280 Metri-Pack Series - 1 way Bus Bar - Unsealed | 12095585 | no |
| 12160640 | 12160664 | 280 Metri-Pack Series - 3 way Bus Bar - Unsealed | 12014021 | no |
| 12160641 | 12160665 | 280 Metri-Pack Series - 1 way Bus Bar - Unsealed | 12095585 | no |
| 12160641 | 12160666 | 280 Metri-Pack Series - 2 way Bus Bar - Unsealed | 12014021 | no |
| 12160642 | 12160667 | 280 Metri-Pack Series - 1 way Bus Bar - Unsealed | 12095585 | no |
| 12161184 | | 150.2 Metri-Pack - Pull-To-Seat - Sealed | 12040128 | yes |
| 12162098 | | Ring - Unsealed | 06286013 | no |
| 12162099 | | Ring - Unsealed | 06286013 | no |
| 12162100 | | Ring - Unsealed | 06286013 | no |
| 12162595 | | 280 Metri-Pack Series - Unsealed | 12018253 | yes |
| 12162596 | | 280 Metri-Pack Series - Unsealed | 12018253 | yes |
| 12162597 | | 280 Metri-Pack Series - Unsealed | 12018253 | yes |
| 12186320 | | W2-W3 Lamp Socket Series - Sealed | 12012249 | yes |
| 12191811 | | GT 150 - Unsealed | none | yes |
| 12191812 | | GT 150 - Unsealed | none | yes |
| 12191818 | | GT 150 - Sealed | none | yes |
| 12191819 | | GT 150 - Sealed | none | yes |
| 15304621 | | B1-C2 Lamp Socket Series - Sealed | 12012249 | yes |
| 15304622 | | B1-C2 Lamp Socket Series - Sealed | 12118726 | no |
| 15304701 | | GT 150 - Unsealed | 12040128 | yes |
| 15304702 | | GT 150 - Unsealed | 12040128 | yes |
| 15304706 | | GT 150 - Sealed | 12012249 | yes |
| 15304707 | | GT 150 - Sealed | 12012249 | yes |
| 15304710 | | GT 280 - Unsealed | 12040128 | yes |
| 15304711 | | GT 280 - Unsealed | 12040128 | yes |
| 15304712 | | GT 280 - Unsealed | 12040128 | yes |
| 15304715 | | GT 280 - Sealed | 12012249 | yes |
| 15304716 | | GT 280 - Sealed | 12012249 | yes |
| 15304717 | | GT 280 - Sealed | 12012249 | yes |
| 15304722 | | GT 280 - Unsealed | 12040128 | yes |
| 15304723 | | GT 280 - Unsealed | 12040128 | yes |
| 15304724 | | GT 280 - Unsealed | 12040128 | yes |
| 15304727 | | GT 280 - Sealed | 12012249 | yes |
| 15304728 | | GT 280 - Sealed | 12012249 | yes |
| 15304729 | | GT 280 - Sealed | 12012249 | yes |

**NOTE:** Specifications in this catalog are for general reference only and are subject to change without notice. To verify product information, please contact a Delphi representative.

## Abbreviations

**ABS** ..... *Acrylonitrile Butadiene Styrene*
**amps** ..... *Amperes*
**App** ..... *Application*
**˚C** ..... *Degrees Centigrade*
**cm** ..... *Centimeter*
**CM**..... *Combination Module*
**CPA** ..... *Connector Position Assurance*
**dc** ..... *Direct Current*
**DIN** ..... *Deutsche Industry Norm (Standard)*
**Dk** ..... *Dark*
**DS** ..... *Double Spring*
**EPDM** ..... *Ethylene Propylene Diene Monomer*
**EMS** ..... *Engine Management Systems*
**˚F** ..... *Degrees Fahrenheit*
**F** ..... *Female*
**GB** ..... *Glass Bead*
**GF** ..... *Glass Fiber*
**g** ..... *Grams*
**GT** ..... *Global Terminal*
**H** ..... *Height*
**HS** ..... *Heat Stabilized*
**HVAC**..... *Heating Ventilation Air Conditioning*
**IM** .....*Impact Modified*
**I MLD** ..... *Insert Molded*
**ISO** ..... *International Standards Organization*
**JIS** ..... *Japanese Industry Standard*
**L** ..... *Length*
**LT** ..... *Left*
**Lt** ..... *Light*
**M** ..... *Male*
**Max** ..... *Maximum*
**Md** ..... *Medium*
**Min** ..... *Minimum*
**mm** ..... *Millimeter*
**MF** ..... *Mineral Filled*
**M/P** ..... *Metri-Pack*
**Mic/P** ..... *Micro-Pack*
**mV** ..... *Millivolt*
**mV/amp** ..... *Millivolt per amp*
**mW** ..... *Milliwatts*
**Nm** ..... *Newtons Meter*
**No.** ..... *Number*
**NPTF** ..... *National Pipe Thread Fine*
**NTC** ..... *Negative Temperature Coefficient*
**OBD** ..... *On Board Diagnostics*
**O.D.** ..... *Outside Diameter*
**PA6** .....*Polyamide 6*
**PA12** ..... *Polyamide 12*
**PA66** ..... *Polyamide 66*
**PBT**..... *Polybutylene Terephtalate (Polyester)*
**P/C** ..... *Printed Circuit*
**PC** ..... *Polycarbonate*
**PEI** ..... *Polyetherimide*
**PET**..... *Polyethylene Terephtalate Polyester*
**PLR** ..... *Primary Lock Reinforcement*
**PP** ..... *Polypropylene*
**PPE** ..... *Polyphenylene Ether*
**PVC** ..... *Polyvinyl Chloride*
**Ref** ..... *Reference*
**RT** ..... *Right*
**SAE** ..... *Society of Automotive Engineers*
**SM**..... *Single Module*
**SST**..... *Stainless Steel*
**TF** ..... *Talc Filled*
**TEEE**..... *Hytrel*
**Temp** ..... *Temperature*
**TEO 45A** .....*Thermoplastic Polyester Olefinic*
**TPA** ..... *Terminal Position Assurance*
**V** ..... *Volt*
**W** .....*Width*
**W/P** ..... *Weather-Pack*

### DIN Cable
**Rated Cross Section**

| Primary Cable ($mm^2$) | Battery Cable ($mm^2$) |
|---|---|
| 0.22 | 10 |
| 0.35 | 16 |
| 0.5 | 25 |
| 0.75 | 35 |
| 1 | 50 |
| 1.5 | 70 |
| 2.5 | 95 |
| 4 | 120 |
| 6 | |

### SAE Cable
**Rated Cross Section**

**Battery Cable Range Conversion**

| Metric Size $mm^2$ | SAE Gauge |
|---|---|
| 13.0 | 6 |
| 19.0 | 4 |
| 32.0 | 2 |
| 40.0 | 1 |
| 50.0 | 0 |
| 62.0 | 2/0 |

**Primary Cable Range Conversion**

| Metric Size $mm^2$ | SAE Gauge |
|---|---|
| 0.22 | 24 |
| 0.35 | 22 |
| 0.50 | 20 |
| 0.80 | 18 |
| 1.00 | 16 |
| 2.00 | 14 |
| 3.00 | 12 |
| 5.00 | 10 |
| 8.00 | 8 |

| Part # | Description | Page |
|---|---|---|
| 02965019 | Connector 4F 56 Series | 9.11 |
| 02965977 | Connector 8F 56 Series | 9.12 |
| 02973385 | Connector 2F 56 Series | 9.11 |
| 02973407 | Connector 2F 56 Series | 9.10 |
| 02984017 | Connector 6F 56 Series | 9.12 |
| 02984959 | Connector 3F 56 Series | 9.11 |
| 06285847 | Crimp Tool | 10.6 |
| 08900863 | Connector 2F 56 Series | 9.10 |
| 08905563 | Clip Connector Rosebud | 9.14 |
| 08905790 | Connector 3F 56 Series | 9.11 |
| 10714774 | Terminal Removal Tool | 10.11 |
| 10714792 | Terminal Removal Tool | 10.11 |
| 10717452 | Clip | 9.14 |
| 10717456 | Seal Cable | 9.9 |
| 10717689 | Connector 20M Ducon 1.5, 2.8, 4.8 Sealed | 5.23 |
| 10717711 | Connector 12F Ducon 4.8 | 5.15 |
| 10717812 | Secondary Lock | 7.20 |
| 10717815 | Conduit TPA Cap Ducon 2.8 | 5.12 |
| 10717826 | Secondary Lock | 5.15 |
| 10717827 | Secondary Lock | 5.15 |
| 10717837 | CPA Ducon | 5.28 |
| 10717849 | TPA Ducon | 5.28 |
| 10717927 | Terminal F Ducon 4.8 Sealed | 5.20 |
| 10717928 | Terminal F Ducon 0.8 Sealed | 5.24 |
| 10717964 | Terminal F Ducon 1.5 Sealed | 5.20 |
| 10718038 | Hinge | 7.20 |
| 10718234 | Seal Cable | 9.9 |
| 10718620 | Fuse Module | 7.22 |
| 10718621 | Relay Module | 7.22 |
| 10719204 | Fixing Clip | 9.15 |
| 10719332 | Standard Bridging Relay | 7.27 |
| 10719337 | Conduit TPA M/P 150 | 2.15 |
| 10719339 | Conduit TPA M/P 150 | 2.17 |
| 10719968 | Clip Adapter | 7.27 |
| 10719975 | Four Position Carrier | 9.16 |
| 10719976 | Holder | 7.23 |
| 10720007 | Tube Clip | 9.14 |
| 10720017 | Module Cover | 7.22 |
| 10720018 | Module Cover | 7.22 |
| 10720085 | Eight Position Carrier | 9.16 |
| 10720611 | Seal Cable | 9.9 |
| 10720613 | Seal Cable | 9.9 |
| 10720615 | Seal Cable | 9.9 |
| 10720617 | Plug Cavity | 9.9 |
| 10720641 | Seal Cable | 9.8 |
| 10720769 | Seal Cable, Ducon | 5.10 |
| 10720851 | Seal Cable | 6.26 |
| 10720907 | Plug Cavity | 9.9 |
| 10720941 | Seal Cable | 9.8 |
| 10720950 | Seal Cable | 9.8 |
| 10720983 | Seal Cable | 9.9 |
| 10724374 | Terminal M Ducon 1.5 Sealed | 5.21 |
| 10724435 | Terminal M Ducon 4.8 Sealed | 5.21 |
| 10724459 | Terminal M Ducon 0.8 Sealed | 5.25 |
| 10728148 | TMS Cover | 5.28 |
| 10730124 | Plug Cavity Ducon 2.8 | 5.11 |
| 10730240 | Seal Cable | 5.16 |
| 10730241 | Seal Cable | 5.16 |
| 10730244 | Connector 40M Ducon Sealed | 5.28 |
| 10731090 | Seal Cable | 9.8 |
| 10731091 | Seal Cable | 9.8 |
| 10731103 | Seal Cable | 9.9 |
| 10733034 | Seal Cable | 9.9 |
| 10733035 | Seal Cable | 9.9 |
| 10737670 | Seal Cable | 9.8 |
| 10737671 | Seal Cable | 9.8 |
| 10739582 | Terminal Removal Tool | 10.10 |
| 10739583 | Terminal Removal Tool | 10.10 |
| 10739584 | Terminal Removal Tool | 10.10 |
| 10739585 | Terminal Removal Tool | 10.11 |
| 10739605 | Terminal Removal Tool | 10.10 |
| 10740396 | Connector 15M Ducon 2.8, 4.8 Sealed | 5.22 |
| 10740397 | Conduit TPA M/P 150 | 2.14 |
| 10740403 | Connector 9F Ducon 4.8 | 5.15 |
| 10740404 | Secondary Lock | 5.15 |
| 10740405 | Five Position Carrier | 9.16 |
| 10740407 | Standard Bridging Relay | 7.27 |
| 10740408 | Standard Bridging Relay | 7.27 |
| 10740409 | Power Bridging Relay | 7.27 |
| 10740410 | Standard Bridging Relay | 7.27 |
| 10740413 | Connector Assembly 15F VF | 6.25 |
| 10740483 | Fuseblock | 7.20 |
| 10740484 | Secondary Lock | 7.20 |
| 10740485 | Secondary Lock | 7.20 |
| 10740486 | Relay Block | 7.21 |
| 10740487 | TPA | 7.21 |
| 12004189 | Battery Spacer | 9.6 |
| 12004267 | Connector 1F 56 Series | 9.10 |
| 12004327 | Connector 5F 56 Series | 9.12 |
| 12010300 | Plug Cavity 1W M/P 280 & W/P | 2.31 |
| 12010852 | Secondary Lock W/P | 6.21 |
| 12010973 | Connector 2M W/P Sealed | 6.18 |
| 12010996 | Connector 1M W/P Sealed | 6.18 |
| 12014012 | Terminal Removal Tool | 10.8 |
| 12014254 | Crimp Tool | 10.6 |
| 12015024 | Connector 4M W/P Sealed | 6.19 |
| 12015284 | M/P 280 Cable Seal | 2.30 |
| 12015306 | Connector 1F 56 Series | 9.10 |
| 12015359 | M/P 280 Cable Seal | 2.30 |
| 12015360 | M/P 280 Cable Seal | 2.30 |
| 12015510 | Secondary Lock M/P Mixed | 2.84 |
| 12015511 | Secondary Lock M/P Mixed | 2.84 |
| 12015664 | Connector 4F M/P 630 | 2.55 |
| 12015791 | Connector Assembly 1F W/P | 6.18 |
| 12015792 | Connector Assembly 2F W/P | 6.18 |
| 12015798 | Connector Assembly 4F W/P | 6.19 |
| 12015858 | Terminal F M/P 280 | 2.24 |
| 12015860 | Terminal F M/P 480 | 2.42 |
| 12015864 | Terminal F M/P 630 | 7.5 |
| 12015865 | Terminal F M/P 630 | 7.5 |
| 12015869 | Terminal F M/P 630 | 2.52 |
| 12015870 | Terminal F M/P 630 | 2.52 |
| 12015952 | Connector 1F M/P 480 | 2.44 |
| 12015987 | Connector 1M M/P 480 | 2.44 |
| 12018256 | Hand Tool Stripper | 10.13 |
| 12018777 | Crimp Tool | 10.6 |
| 12020014 | Connector 3F M/P 280, 480 | 2.70 |
| 12020035 | Terminal F M/P 630 | 2.52 |
| 12020116 | Terminal M M/P 280 | 2.25 |
| 12020119 | Terminal M M/P 480 | 2.43 |
| 12020120 | Terminal M M/P 480 | 2.43 |
| 12020125 | Terminal M M/P 630 | 2.53 |
| 12020126 | Terminal M M/P 630 | 2.53 |
| 12020156 | Terminal F M/P 630 Pull-To-Seat | 2.56 |
| 12020365 | Terminal M M/P 630 | 2.53 |
| 12020366 | Terminal F M/P 480 | 2.42 |
| 12020629 | Connector 17M M/P 280, 480, 630 | 2.84 |
| 12020720 | Gasket Lamp Socket | 6.2 |
| 12020782 | Terminal M M/P 280 | 2.25 |
| 12020784 | Terminal M M/P 480 | 2.43 |
| 12020786 | Connector 6M W/P | 6.20 |
| 12020801 | Terminal F W/P Sealed | 6.16 |
| 12020807 | TPA M/P 280 | 2.32 |
| 12020827 | Connector 3M W/P | 6.19 |
| 12020829 | Connector Assembly 3F W/P | 6.19 |
| 12020830 | Connector 4M W/P | 6.20 |
| 12020832 | Connector Assembly 4F W/P | 6.20 |
| 12020833 | CPA Perpendicular M/P & W/P | 2.14 |
| 12020926 | Connector Assembly 6F W/P | 6.20 |
| 12031876 | Terminal Removal Tool | 10.8 |
| 12033731 | Cover Inline AutoFuse | 7.30 |
| 12033769 | Connector Assembly 2F M/P 630 Pull-To-Seat | 2.58 |
| 12033820 | Terminal M M/P 480 | 2.43 |
| 12033871 | Connector 5F M/P 630 | 7.26 |
| 12033872 | TPA M/P 630 | 7.10 |
| 12033972 | Terminal M M/P 630 | 2.53 |
| 12033997 | Terminal F M/P 630 Pull-To-Seat | 2.56 |
| 12034003 | Connector 5F M/P 630 | 7.26 |
| 12034046 | Terminal F M/P 280 | 2.24 |
| 12034047 | Terminal M M/P 280 | 2.25 |
| 12034061 | Connector 6F M/P 480 | 2.49 |
| 12034074 | Connector 2M W/P | 6.18 |
| 12034145 | TPA M/P 280 | 2.33 |
| 12034170 | Seal Cable | 9.9 |
| 12034269 | Connector 2M M/P 630 | 2.58 |
| 12034363 | TPA M/P 630 | 2.58 |
| 12034364 | Seal Cable 2M M/P 630 | 2.58 |
| 12034365 | M/P 280 Cable Seal | 2.30 |
| 12034396 | Connector Header Assembly 60M M/P 150 | 2.102 |
| 12034413 | Plug Seal Cable 1W | 2.99 |
| 12039500 | Crimp Tool | 10.6 |
| 12040070 | Crimp Tool | 10.6 |
| 12040780 | Flange Seal | 2.102 |
| 12040902 | Terminal M MIC/P 100 | 3.3 |
| 12040903 | Connector 4M MIC/P 100 | 3.4 |
| 12040905 | Connector 9M MIC/P 100 | 3.5 |
| 12040923 | Connector Header Assembly 18M M/P 150 | 2.100 |
| 12040938 | Seal Connector 18M M/P 150 | 2.100 |
| 12040977 | Connector Assembly 3F M/P 280 Sealed | 2.33 |
| 12041301 | Connector 8F M/P 280 | 2.37 |
| 12041352 | M/P 280 Cable Seal | 2.30 |
| 12045681 | Connector 3M M/P 280, 480 | 2.70 |
| 12045688 | Connector 8M M/P 150 | 2.10 |
| 12045689 | TPA M/P 150 | 2.10 |
| 12045690 | TPA M/P 150 | 2.10 |
| 12045699 | TPA M/P 630 | 2.59 |
| 12045773 | Terminal M M/P 150 Sealed | 2.13 |
| 12045808 | Connector 10M M/P 150 Sealed | 2.17 |
| 12045889 | TPA MIC/P 100 | 3.17 |
| 12045890 | TPA MIC/P 100 | 3.17 |
| 12045897 | Secondary Lock M/P 150, 280 | 2.77 |
| 12047531 | Connector 10F MIC/P 100 | 3.6 |
| 12047581 | Terminal M M/P 150 | 2.3 |
| 12047662 | Connector 2F M/P 150 | 2.4 |
| 12047663 | Connector 2M M/P 150 | 2.4 |
| 12047665 | TPA M/P 150 | 2.4 |
| 12047682 | Connector 1F M/P 150 | 2.4 |
| 12047683 | Connector 1M M/P 150 | 2.4 |
| 12047751 | Secondary Lock M/P 150, 280 | 2.86 |
| 12047767 | Terminal F M/P 150 | 2.2 |
| 12047781 | Connector 3F M/P 150 | 2.5 |
| 12047782 | Connector 3M M/P 150 | 2.5 |
| 12047783 | TPA M/P 150 | 2.5 |
| 12047784 | TPA M/P 150 | 2.5 |
| 12047785 | Connector 4F M/P 150 | 2.6 |
| 12047786 | Connector 4M M/P 150 | 2.6 |
| 12047787 | TPA M/P 150 | 2.6 |
| 12047814 | Connector 10M MIC/P 100 | 3.6 |

| Part # | Description | Page |
|---|---|---|
| 12047815 | Connector 5M MIC/P 100 | 3.4 |
| 12047829 | Connector 5M MIC/P 100 | 3.4 |
| 12047835 | Clip Connector | 9.13 |
| 12047886 | Connector 8F M/P 150 | 2.10 |
| 12047900 | TPA MIC/P 100 | 3.16 |
| 12047901 | TPA MIC/P 100 | 3.16 |
| 12047931 | Connector 8M M/P 150 Sealed | 2.16 |
| 12047933 | Connector 7M M/P 150 Sealed | 2.16 |
| 12047937 | Connector Assembly 8F M/P 150 Sealed | 2.16 |
| 12047938 | Connector Assembly 7F M/P 150 Sealed | 2.16 |
| 12047948 | TPA M/P 150 | 2.15 |
| 12048074 | Terminal F M/P 150 Sealed | 2.12 |
| 12048159 | Terminal M M/P 280 Sealed | 2.31 |
| 12048254 | Terminal M M/P 280 Sealed | 2.31 |
| 12048344 | TPA MIC/P 100 | 3.14 |
| 12048345 | TPA MIC/P 100 | 3.14 |
| 12048412 | Connector Assembly 4F M/P 480 Sealed | 2.50 |
| 12048413 | TPA M/P 480 | 2.50 |
| 12048433 | Assembly Seal Cable M/P 480 | 2.46 |
| 12048450 | Terminal F M/P 480 Sealed | 2.46 |
| 12048451 | Terminal F M/P 480 Sealed | 2.46 |
| 12048453 | Connector Assembly 30M M/P 150 | 2.100 |
| 12048456 | Seal Connector 30M M/P 150 | 2.100 |
| 12052130 | Connector Header Assembly 48M M/P 150 | 2.101 |
| 12052131 | Flange Seal | 2.101 |
| 12052139 | Terminal F M/P 480 Sealed | 2.46 |
| 12052172 | Terminal M M/P 480 Sealed | 2.47 |
| 12052189 | Connector 10M M/P 150 Sealed | 2.17 |
| 12052199 | TPA 7W M/P 150, 480 | 2.75 |
| 12052200 | Connector 7M M/P 150, 480 Sealed | 2.75 |
| 12052217 | Terminal F M/P 280 | 2.24 |
| 12052219 | Terminal F M/P 480 | 2.42 |
| 12052221 | Terminal F M/P 480 | 2.42 |
| 12052222 | Terminal F M/P 630 | 2.52 |
| 12052224 | Terminal F M/P 630 | 2.52 |
| 12052225 | Terminal F M/P 630 | 7.5 |
| 12052227 | Terminal F M/P 630 | 7.5 |
| 12052287 | Connector Assembly 5F M/P 280, 630 Sealed | 2.77 |
| 12052290 | TPA M/P Mixed | 2.77 |
| 12052452 | M/P 480 Cable Seal | 2.46 |
| 12052453 | M/P 480 Cable Seal | 2.46 |
| 12052455 | Terminal F M/P 630 Sealed | 2.56 |
| 12052456 | Terminal F M/P 630 Sealed | 2.56 |
| 12052457 | Terminal F M/P 630 Sealed | 2.56 |
| 12052480 | Connector 5M M/P 150 Sealed | 2.16 |
| 12052486 | TPA M/P 150, 480 | 2.75 |
| 12052490 | TPA Lamp Socket | 6.6 |
| 12052600 | Connector Assembly 5F M/P 150 Sealed | 2.16 |
| 12052613 | Connector Assembly 2F M/P 480 Sealed | 2.48 |
| 12052623 | Connector 4M M/P 630 | 2.55 |
| 12052634 | TPA M/P 150 | 2.14 |
| 12052641 | Connector Assembly 2F M/P 150 Sealed | 2.14 |
| 12052644 | Connector Assembly 2F M/P 150 Sealed | 2.14 |
| 12052816 | TPA M/P 280 | 2.38 |
| 12052826 | Terminal M M/P 630 | 2.53 |
| 12052827 | Terminal M M/P 480 | 2.43 |
| 12052832 | Connector 2F M/P 150 | 2.5 |
| 12052833 | Connector 2M M/P 150 | 2.5 |
| 12052834 | CPA Axial M/P | 2.5 |
| 12052845 | TPA M/P 150 | 2.14 |
| 12052848 | Connector Assembly 6F M/P 150 Sealed | 2.16 |
| 12052850 | TPA M/P 150 | 2.16 |
| 12052854 | Connector 7F M/P 280 | 2.37 |
| 12052856 | Connector 4F M/P 280 | 2.37 |
| 12052898 | TPA M/P 150 | 2.21 |
| 12052924 | M/P 150 Cable Seal | 2.12 |
| 12052925 | M/P 150 Cable Seal | 2.12 |
| 12052931 | M/P 480 Cable Seal | 2.46 |
| 12052978 | Connector 6F 56 Series | 9.12 |
| 12059160 | TPA MIC/P 100 | 3.4 |
| 12059168 | Plug Cavity 1W M/P 150, MIC/P & GT | 1.39 |
| 12059195 | TPA M/P 280 | 2.38 |
| 12059249 | Connector 2F M/P 150 | 2.4 |
| 12059250 | Connector 2M M/P 150 | 2.4 |
| 12059255 | Plug Cavity 1W M/P 630 | 2.57 |
| 12059257 | M/P 630 Cable Seal | 2.56 |
| 12059258 | M/P 630 Cable Seal | 2.56 |
| 12059259 | M/P 630 Cable Seal | 2.56 |
| 12059260 | M/P 630 Cable Seal | 2.56 |
| 12059296 | Connector 5F M/P 480 | 2.49 |
| 12059297 | Secondary Lock M/P 480 | 2.49 |
| 12059426 | Cover Connector M/P 630 Pull-to-Seat | 7.30 |
| 12059450 | Connector 2M M/P 280 Sealed | 2.32 |
| 12059472 | Connector Assembly 7F M/P 150, 480 Sealed | 2.75 |
| 12059573 | Connector Assembly 6F M/P 280 Sealed | 2.38 |
| 12059800 | Connector 5F M/P 150 | 2.20 |
| 12059801 | TPA M/P 150 | 2.20 |
| 12059860 | TPA M/P 480 | 2.45 |
| 12059894 | Terminal M M/P 150 | 2.3 |
| 12059897 | TPA M/P 480 | 2.48 |
| 12059952 | Lamp Socket - Wedge Base W2 | 6.6 |
| 12064734 | Terminal M M/P 630 Sealed | 2.57 |
| 12064735 | Terminal M M/P 630 Sealed | 2.57 |
| 12064736 | Terminal M M/P 630 Sealed | 2.57 |
| 12064737 | Terminal M M/P 630 Sealed | 2.57 |
| 12064749 | Connector 2F M/P 480 | 2.45 |
| 12064750 | Connector 2M M/P 480 | 2.45 |
| 12064751 | TPA M/P 480 | 2.45 |
| 12064752 | Connector 6F M/P 280 | 2.28 |
| 12064753 | TPA M/P 280 | 2.28 |
| 12064754 | Connector 6M M/P 280 | 2.28 |
| 12064755 | TPA M/P 280 | 2.28 |
| 12064758 | Connector 3F M/P 150 | 2.6 |
| 12064759 | Connector 3M M/P 150 | 2.6 |
| 12064760 | Connector 4F M/P 150 | 2.7 |
| 12064761 | Connector 4M M/P 150 | 2.7 |
| 12064762 | Connector 6F M/P 150 | 2.9 |
| 12064763 | Connector 6M M/P 150 | 2.9 |
| 12064764 | TPA 3W M/P 150 | 2.9 |
| 12064765 | TPA M/P 150 | 2.9 |
| 12064766 | Connector 8F M/P 150 | 2.10 |
| 12064767 | Connector 8M M/P 150 | 2.10 |
| 12064768 | TPA M/P 150 | 2.10 |
| 12064769 | Connector 10F M/P 150 | 2.11 |
| 12064770 | Connector 10M M/P 150 | 2.11 |
| 12064771 | TPA M/P 150 | 2.11 |
| 12064772 | TPA M/P 150 | 2.11 |
| 12064798 | Connector Header Assembly 12M MIC/P 100 | 3.12 |
| 12064799 | Connector 12F MIC/P 100 | 3.12 |
| 12064822 | TPA MIC/P 100 | 3.12 |
| 12064823 | TPA MIC/P 100 | 3.12 |
| 12064834 | Secondary Lock M/P 150,280,480,630 | 2.94 |
| 12064835 | Secondary Lock M/P 150,280,480,630 | 2.94 |
| 12064837 | Seal Connector 36M M/P Mixed | 2.94 |
| 12064860 | Connector 6F M/P 150 | 2.20 |
| 12064861 | TPA M/P 150 | 2.20 |
| 12064862 | Connector 8F M/P 150 | 2.20 |
| 12064863 | TPA M/P 150 | 2.20 |
| 12064971 | Terminal F M/P 150 | 2.2 |
| 12064980 | Connector 9F MIC/P 100 | 3.5 |
| 12064982 | Connector 5F MIC/P 100 | 3.4 |
| 12064983 | Connector 5F MIC/P 100 | 3.4 |
| 12064986 | TPA MIC/P 100 | 3.5 |
| 12064987 | TPA MIC/P 100 | 3.4 |
| 12064989 | CPA Axial MIC/P | 3.4 |
| 12064993 | Connector 6F MIC/P 100 | 3.10 |
| 12064998 | Connector 8F M/P 280 | 2.29 |
| 12064999 | TPA M/P 280 | 2.29 |
| 12065141 | TPA M/P 280 | 2.29 |
| 12065171 | Connector 1M M/P 280 Sealed | 2.32 |
| 12065172 | Connector Assembly 1F M/P 280 Sealed | 2.32 |
| 12065196 | Terminal M M/P 480 Sealed | 2.47 |
| 12065197 | Terminal M M/P 480 Sealed | 2.47 |
| 12065249 | TPA M/P 280 | 2.32 |
| 12065266 | Plug Seal Cable 1W | 2.99 |
| 12065279 | TPA M/P 280 | 2.32 |
| 12065298 | Connector Assembly 4F M/P 150 SLD | 2.21 |
| 12065422 | Connector 3F M/P 150 | 2.5 |
| 12065423 | Connector 3M M/P 150 | 2.5 |
| 12065425 | Connector Assembly 10F M/P 150 SLD | 2.17 |
| 12065426 | Connector Assembly 10F M/P 150 Sealed | 2.17 |
| 12065449 | Assembly Terminal Ring & Washer | 9.2 |
| 12065647 | Connector Header Assembly 10M MIC/P 100 | 3.11 |
| 12065685 | Connector Assembly 5F M/P 630 Pull-To-Seat | 7.31 |
| 12065686 | Connector Assembly 4F M/P 630 Pull-To-Seat | 7.31 |
| 12065703 | M/P 480 Cable Seal | 2.46 |
| 12065785 | Connector 10F MIC/P 100 | 3.15 |
| 12065847 | Shroud | 2.93 |
| 12065848 | Secondary Lock M M/P Mixed | 2.93 |
| 12065849 | Seal Connector | 2.93 |
| 12065863 | Connector 2M M/P 480 Sealed | 2.48 |
| 12065870 | Connector Header Assembly 6M MIC/P 100 | 3.10 |
| 12065873 | Connector 7F MIC/P 100 | 3.5 |
| 12065874 | Connector 7M MIC/P 100 | 3.5 |
| 12065892 | Terminal F M/P 480 | 7.5 |
| 12065893 | Terminal F M/P 480 | 7.5 |
| 12065894 | Terminal F M/P 480 | 7.5 |
| 12065915 | Assembly Terminal F MAXI & Spring | 7.6 |
| 12065916 | Assembly Terminal F MAXI & Spring | 2.62 |
| 12065918 | Assembly Terminal F MAXI & Spring | 7.6 |
| 12065930 | Assembly Terminal 4F MAXI Bus Bar | 7.6 |
| 12065943 | TPA MIC/P 100 | 3.5 |
| 12066050 | Secondary Lock 30F M/P Mixed | 2.93 |
| 12066082 | Plug Cavity 1W M/P 480 | 2.47 |
| 12066129 | Cover | 2.93 |
| 12066130 | Connector 9F MIC/P 100 | 3.13 |
| 12066170 | TPA MIC/P 100 | 3.10 |
| 12066176 | TPA M/P 150 | 2.21 |
| 12066189 | Connector 4F MIC/P 100 | 3.4 |
| 12066195 | Connector 8M M/P 280 | 2.29 |
| 12066214 | Terminal F M/P 280 | 2.24 |
| 12066269 | Terminal M M/P 480 | 2.43 |
| 12066271 | Terminal M M/P 280 | 2.25 |
| 12066304 | TPA M/P 150 | 2.16 |

| Part # | Description | Page |
|---|---|---|
| 12066307 | Connector Header Assembly 13M MIC/P 100 | 3.13 |
| 12066454 | Terminal M M/P 630 | 2.53 |
| 12066493 | Terminal M M/P 630 | 2.53 |
| 12066571 | Connector 4F M/P 480 | 2.49 |
| 12066572 | TPA M/P 480 | 2.49 |
| 12066590 | Shroud | 2.94 |
| 12066614 | Terminal F M/P 630 Pull-To-Seat | 2.56 |
| 12066638 | Terminal Lamp Socket Wedge Base Sealed | 6.3 |
| 12066639 | Terminal Lamp Socket Wedge Base Sealed | 6.3 |
| 12066681 | Connector Assembly 2F M/P Pull-To-Seat | 7.30 |
| 12070947 | Crimp Tool | 10.7 |
| 12070948 | Crimp Tool | 10.7 |
| 12071687 | Crimp Tool | 10.7 |
| 12075402 | Insert Removal Tool | 10.12 |
| 12077411 | Terminal F M/P 280 Sealed | 2.30 |
| 12077413 | Terminal F M/P 280 Sealed | 2.30 |
| 12077532 | Secondary Lock | 7.9 |
| 12077534 | Electrical Center Base (1 Module) | 7.15 |
| 12077538 | Cover Fuseblock MAXI | 7.9 |
| 12077563 | Secondary Lock | 7.9 |
| 12077569 | Assembly Fuseblock MAXI | 7.9 |
| 12077571 | Convenience Center | 7.10 |
| 12077572 | Secondary Lock | 7.10 |
| 12077591 | Connector Assembly 5F M/P 150 | 2.21 |
| 12077628 | Terminal M M/P 150 Sealed | 2.13 |
| 12077760 | M/P 630 Cable Seal | 2.56 |
| 12077899 | CPA Axial MIC/P | 3.12 |
| 12077904 | TPA M/P 280 | 2.38 |
| 12077939 | Terminal F M/P 280.1 Pull-To-Seat | 2.30 |
| 12084126 | Connector Assembly 2F DS Sealed | 6.27 |
| 12084149 | Clip Connector Rosebud | 9.13 |
| 12084185 | Assembly Terminal Ring & Washer | 9.2 |
| 12084200 | Terminal F M/P 150 Sealed | 2.12 |
| 12084201 | Terminal F M/P 280 Sealed | 2.30 |
| 12084449 | Terminal M MIC/P 100 | 3.3 |
| 12084554 | Assembly Terminal Ring & Washer | 9.2 |
| 12084561 | Clip Connector Rosebud | 9.14 |
| 12084586 | Terminal M M/P 280 | 2.25 |
| 12084588 | Terminal F M/P 630 | 7.5 |
| 12084590 | Terminal F M/P 630 | 2.52 |
| 12084595 | Terminal F M/P 480 | 2.42 |
| 12084596 | Terminal F M/P 630 | 2.52 |
| 12084673 | TPA M/P 280 | 2.34 |
| 12084791 | Fuse Extractor | 7.18 |
| 12084890 | Connector 5F M/P 280 Sealed | 2.37 |
| 12084891 | Connector Assembly 5F M/P 280 | 2.34 |
| 12084910 | Electrical Center Base (1 Module) | 7.14 |
| 12084912 | Terminal Assembly F MIC/P 100W | 3.24 |
| 12084913 | Terminal Assembly F MIC/P 100W | 3.24 |
| 12084944 | Connector 16F MIC/P 100 | 3.14 |
| 12084945 | Connector 16F MIC/P 100 | 3.14 |
| 12084948 | Connector Assembly 16M MIC/P 100 | 3.14 |
| 12084949 | Connector Assembly 16M MIC/P 100 | 3.14 |
| 12085030 | Connector Assembly 2F M/P 630 Pull-To-Seat | 7.30 |
| 12088187 | Terminal Lamp Socket Wedge Base Sealed | 6.3 |
| 12089040 | Terminal M W/P Sealed | 6.17 |
| 12089045 | Assembly Terminal Ring & Washer | 9.2 |
| 12089137 | Terminal Lamp Socket Wedge Base | 6.3 |
| 12089139 | Terminal Lamp Socket Wedge Base | 6.3 |
| 12089188 | Terminal F W/P Sealed | 6.16 |
| 12089236 | Terminal F M/P 480 | 7.5 |
| 12089240 | Assembly Terminal Ring & Washer | 9.2 |
| 12089247 | Connector 4M M/P 150 (Clip Slot) | 2.6 |
| 12089248 | Connector 4F M/P 150 | 2.6 |
| 12089263 | Assembly Terminal Ring & Washer | 9.2 |
| 12089290 | Terminal F M/P 150 Pull-To-Seat | 2.98 |
| 12089307 | Terminal M W/P Sealed | 6.17 |
| 12089442 | Seal Cable 1W M/P 150 | 2.12 |
| 12089444 | M/P 280 Cable Seal | 2.30 |
| 12089496 | Assembly Terminal Ring & Washer | 9.2 |
| 12089852 | Connector Header Assembly 20M MIC/P 100 | 3.15 |
| 12092030 | Terminal Lamp Socket Ground Sealed | 6.3 |
| 12092058 | Terminal Lamp Socket Wedge Base Sealed | 6.3 |
| 12092162 | Connector 4F M/P 150 | 2.7 |
| 12092163 | Connector 4M M/P 150 | 2.7 |
| 12092164 | TPA M/P 150 | 2.7 |
| 12092220 | MAXI Fuse Module | 7.9 |
| 12092231 | MAXI Fuse Module | 7.9 |
| 12092252 | TPA M/P 280 | 2.37 |
| 12092254 | Connector 6F M/P 280 | 2.37 |
| 12092320 | Connector Header Assembly 24M MIC/P 100W | 3.26 |
| 12092328 | Electrical Center Base (3 Modules) | 7.15 |
| 12092332 | Battery Terminal Cover | 7.15 |
| 12092399 | Connector 3F MAXI Fuse | 2.65 |
| 12092400 | Connector 3F MAXI Fuse | 2.65 |
| 12092401 | TPA M/P 800 | 2.65 |
| 12092444 | Assembly Terminal F MAXI & Spring | 2.62 |
| 12092445 | Assembly Terminal F MAXI & Spring | 2.62 |
| 12092507 | Secondary Lock | 7.8 |
| 12092605 | Connector Assembly 4F M/P 630 Pull-To-Seat | 7.31 |
| 12092669 | Battery Terminal Cover | 7.15 |
| 12092741 | Electrical Center Base (3 Modules) | 7.15 |
| 12092748 | Position Assurance Device | 7.18 |
| 12092844 | TPA M/P 150 | 2.15 |
| 12092886 | Connector Header Assembly 24M MIC/P 100 | 3.16 |
| 12094429 | Terminal Removal Tool | 10.8 |
| 12094430 | Terminal Removal Tool | 10.8 |
| 12094441 | Secondary Lock & TPA Removal Tool | 10.13 |
| 12103010 | Terminal Battery Ring | 9.4 |
| 12103014 | Terminal Battery Ring | 9.4 |
| 12103086 | Assembly Terminal Ring & Washer | 9.2 |
| 12103172 | Connector Assembly 2F M/P 630 | 7.30 |
| 12103360 | Terminal F M/P 280.1 Pull-To-Seat | 2.30 |
| 12103501 | Terminal Ring | 9.3 |
| 12103502 | Terminal Ring | 7.6 |
| 12103503 | Terminal Ring | 9.3 |
| 12103504 | Terminal Ring | 7.6 |
| 12103505 | Terminal Ring | 9.3 |
| 12103506 | Terminal Ring | 7.6 |
| 12103507 | Terminal Ring | 9.3 |
| 12103508 | Terminal Ring | 7.6 |
| 12103509 | Terminal Ring | 9.3 |
| 12103510 | Terminal Ring | 9.3 |
| 12103511 | Terminal Ring | 7.6 |
| 12103512 | Terminal Ring | 7.6 |
| 12103513 | Terminal Ring | 7.6 |
| 12103514 | Terminal Ring | 7.6 |
| 12103515 | Terminal Ring | 9.3 |
| 12103516 | Terminal Ring | 9.3 |
| 12103517 | Terminal Ring | 9.3 |
| 12103518 | Terminal Ring | 9.3 |
| 12103519 | Terminal Ring | 9.3 |
| 12103520 | Terminal Ring | 9.3 |
| 12103784 | Connector Assembly 2F W/P | 6.18 |
| 12103881 | Terminal F M/P 150 Pull-To-Seat | 2.98 |
| 12103948 | Terminal F M/P 480 | 7.5 |
| 12103965 | Terminal Ring | 7.6 |
| 12103974 | Connector 5M M/P 150 | 2.15 |
| 12110041 | Electrical Center Base (4 Modules) | 7.15 |
| 12110043 | Cover Module | 7.8 |
| 12110054 | TPA Lamp Socket | 6.7 |
| 12110057 | Connector 2F | 7.28 |
| 12110058 | Secondary Lock | 7.28 |
| 12110075 | Connector 6F M/P 280, 630 | 2.76 |
| 12110088 | Connector 24F MIC/P 100 | 3.16 |
| 12110112 | Connector 32F MIC/P 100 | 3.17 |
| 12110113 | Connector 32F MIC/P 100 | 3.17 |
| 12110114 | Connector 32F MIC/P 100 | 3.17 |
| 12110115 | Connector 32F MIC/P 100 | 3.17 |
| 12110127 | Assembly Terminal F MAXI & Spring | 2.62 |
| 12110128 | Assembly Terminal F MAXI & Spring | 7.6 |
| 12110129 | MAXI Fuse Assembly Module | 7.9 |
| 12110155 | Strain Relief 24F MIC/P 100W Right Hand | 3.26 |
| 12110179 | Connector Assembly 2F M/P 280.1 Pull-To-Seat | 2.39 |
| 12110206 | Connector 24F MIC/P 100 | 3.20 |
| 12110207 | Connector 32F MIC/P 100 | 3.18 |
| 12110209 | Connector Header Assembly 56M MIC/P 100 | 3.21 |
| 12110236 | Terminal F M/P 150 Pull-To-Seat | 2.98 |
| 12110241 | Connector Header Assembly 56M MIC/P 100 | 3.21 |
| 12110244 | Connector 24F MIC/P 100 | 3.20 |
| 12110245 | Connector 32F MIC/P 100 | 3.21 |
| 12110246 | Terminal Battery Ring | 9.5 |
| 12110250 | Connector 16F M/P 150 Tangless | 2.18 |
| 12110252 | Connector 16M M/P 150 | 2.18 |
| 12110254 | Clip OBD II | 2.18 |
| 12110259 | Connector 16F MIC/P 100 | 3.14 |
| 12110261 | Connector Assembly 16M MIC/P 100 | 3.14 |
| 12110290 | Clip Connector Rosebud | 9.13 |
| 12110293 | Connector Assembly 3F M/P 150 Sealed | 2.14 |
| 12110299 | CPA MIC/P 100W | 3.26 |
| 12110323 | Connector Assembly 32M MIC/P 100 | 3.18 |
| 12110403 | Seal Connector 24F MIC/P 100W | 3.26 |
| 12110415 | MAXI Fuse Assembly Module | 7.9 |
| 12110440 | Connector 4M M/P 280 | 2.106 |
| 12110446 | Sensor Connector Assembly 2M M/P 150 | 8.3 |

| Part # | Description | Page |
|---|---|---|
| 12110485 | Connector Assembly 36M MIC/P 100W | 3.28 |
| 12110487 | Connector 36F MIC/P 100W | 3.28 |
| 12110488 | Retainer 36F MIC/P 100W | 3.28 |
| 12110489 | Seal Cable 36F MIC/P 100W | 3.28 |
| 12110490 | Strain Relief 36F MIC/P 100W | 3.28 |
| 12110517 | Clip Connector Rosebud | 9.13 |
| 12110539 | Connector Assembly 5F M/P 280 FlexLock | 7.30 |
| 12110540 | TPA M/P 280 | 7.30 |
| 12110541 | Connector 6F M/P 280 FlexLock | 7.26 |
| 12110542 | Secondary Lock | 7.26 |
| 12110594 | Convenience Center | 7.12 |
| 12110595 | Secondary Lock | 7.12 |
| 12110602 | Cover Convenience Center | 7.12 |
| 12110626 | Connector 8F M/P 280 FlexLock | 2.106 |
| 12110644 | Terminal 1F M/P 280 Bus Bar | 7.5 |
| 12110645 | Terminal 1F M/P 280 Bus Bar | 7.5 |
| 12110646 | Terminal 1F M/P 280 Bus Bar | 7.5 |
| 12110647 | Terminal 1F M/P 280 Bus Bar | 7.5 |
| 12110648 | Terminal 1F M/P 280 Bus Bar | 7.5 |
| 12110649 | Terminal 1F M/P 280 Bus Bar | 7.5 |
| 12110650 | Terminal 2F M/P 280 Bus Bar | 7.5 |
| 12110651 | Terminal 3F M/P 280 Bus Bar | 7.5 |
| 12110652 | Terminal 1F M/P 280 Bus Bar | 7.5 |
| 12110653 | Terminal 2F M/P 280 Bus Bar | 7.5 |
| 12110654 | Terminal 3F M/P 280 Bus Bar | 7.5 |
| 12110655 | Terminal 4F M/P 280 Bus Bar | 7.5 |
| 12110656 | Terminal 5F M/P 280 Bus Bar | 7.5 |
| 12110657 | Terminal 1F M/P 280 Bus Bar | 7.5 |
| 12110658 | Terminal 2F M/P 280 Bus Bar | 7.5 |
| 12110659 | Terminal 3F M/P 280 Bus Bar | 7.5 |
| 12110660 | Terminal 4F M/P 280 Bus Bar | 7.5 |
| 12110661 | Terminal 5F M/P 280 Bus Bar | 7.5 |
| 12110662 | Terminal 1F M/P 280 Bus Bar | 7.5 |
| 12110663 | Terminal 1F M/P 280 Bus Bar | 7.5 |
| 12110664 | Terminal 1F M/P 280 Bus Bar | 7.5 |
| 12110665 | Terminal 1F M/P 280 Bus Bar | 7.5 |
| 12110685 | Terminal 1F M/P 280 Bus Bar | 7.5 |
| 12110686 | Terminal 1F M/P 280 Bus Bar | 7.5 |
| 12110698 | Connector 6M M/P 800 | 2.65 |
| 12110700 | Terminal M M/P 800 Tangless | 2.63 |
| 12110708 | Terminal 1F M/P 280 Bus Bar | 7.4 |
| 12110709 | Terminal 1F M/P 280 Bus Bar | 7.4 |
| 12110710 | Terminal 1F M/P 280 Bus Bar | 7.4 |
| 12110711 | Terminal 2F M/P 280 Bus Bar | 7.4 |
| 12110712 | Terminal 3F M/P 280 Bus Bar | 7.4 |
| 12110713 | Terminal 2F M/P 280 Bus Bar | 7.4 |
| 12110714 | Terminal 3F M/P 280 Bus Bar | 7.4 |
| 12110715 | Terminal 4F M/P 280 Bus Bar | 7.4 |
| 12110716 | Terminal 5F M/P 280 Bus Bar | 7.4 |
| 12110717 | Terminal 2F M/P 280 Bus Bar | 7.4 |
| 12110718 | Terminal 3F M/P 280 Bus Bar | 7.4 |
| 12110719 | Terminal 4F M/P 280 Bus Bar | 7.4 |
| 12110720 | Terminal 5F M/P 280 Bus Bar | 7.4 |
| 12110751 | Connector Assembly 7F M/P 280 FlexLock Sealed | 2.35 |
| 12110753 | Connector 7M M/P 280 Sealed | 2.35 |
| 12110754 | TPA M/P 280 | 2.35 |
| 12110782 | TPA M/P 280 | 2.36 |
| 12110783 | Clip Connector | 9.13 |
| 12110822 | Seal Connector 15F | 2.36 |
| 12110842 | Terminal F M/P 280 Tangless | 2.24 |
| 12110843 | Terminal F M/P 280 Tangless | 2.24 |
| 12110844 | Terminal F M/P 280 Tangless | 2.24 |
| 12110845 | Terminal F M/P 280 Tangless Sealed | 2.30 |
| 12110846 | Terminal F M/P 280 Tangless Sealed | 2.30 |
| 12110847 | Terminal F M/P 280 Tangless Sealed | 2.30 |
| 12110853 | Terminal F M/P 280 Tangless Sealed | 2.30 |
| 12121897 | Cavity Plug Insertion Tool | 10.12 |
| 12122523 | Terminal Removal Tool | 10.8 |
| 12122584 | Cavity Plug Insertion Tool | 10.12 |
| 12122647 | Secondary Lock & TPA Removal Tool | 10.13 |
| 12122727 | Cavity Plug Insertion Tool | 10.12 |
| 12123162 | Cavity Plug Insertion Tool | 10.12 |
| 12124075 | Terminal F M/P 150.2 Pull-To-Seat | 2.12 |
| 12124076 | Terminal F M/P 150.2 Pull-To-Seat | 2.12 |
| 12124107 | Connector 6M M/P 150 | 2.16 |
| 12124276 | Terminal Battery Ring | 9.4 |
| 12124295 | Terminal Battery Ring | 9.4 |
| 12124296 | Terminal Battery Ring | 9.4 |
| 12124297 | Terminal Battery Ring | 9.4 |
| 12124304 | Terminal F M/P 480 | 2.42 |
| 12124471 | Terminal Lamp Socket Wedge Base W2 Sealed | 6.3 |
| 12124512 | Terminal F 56 Series | 9.10 |
| 12124513 | Terminal F 56 Series | 9.10 |
| 12124515 | Terminal F 56 Series | 9.10 |
| 12124517 | Terminal F 56 Series | 9.10 |
| 12124518 | Terminal F 56 Series | 9.10 |
| 12124519 | Terminal F 56 Series | 9.10 |
| 12124520 | Terminal F 56 Series | 9.10 |
| 12124522 | Terminal F 56 Series | 9.10 |
| 12124523 | Terminal F 56 Series | 9.10 |
| 12124559 | Terminal F M/P 630 | 7.5 |
| 12124580 | Terminal F W/P Sealed | 6.16 |
| 12124581 | Terminal F W/P Sealed | 6.16 |
| 12124582 | Terminal M W/P Sealed | 6.17 |
| 12124587 | Terminal M W/P Sealed | 6.17 |
| 12124598 | Terminal Lamp Socket Wedge Base W2 Sealed | 6.3 |
| 12124634 | Connector Assembly 5F M/P 280 | 2.38 |
| 12124669 | Seal Cable 1W M/P 150 | 2.12 |
| 12124685 | Connector Assembly 3F M/P 630 | 2.59 |
| 12124732 | Stabilizer 116M M/P Mixed | 2.86 |
| 12124811 | TPA M/P 280 | 2.37 |
| 12124819 | Connector Assembly 2F M/P 280 Sealed | 2.32 |
| 12124824 | TPA M/P 150 | 2.21 |
| 12124898 | Connector Assembly 4F M/P 150, 280 | 2.77 |
| 12124977 | Terminal M M/P 280 Sealed | 2.31 |
| 12125080 | Crimp Tool | 10.7 |
| 12129008 | Connector Header Assembly 32M MIC/P 100W | 3.27 |
| 12129021 | Retainer 32F MIC/P 100W | 3.27 |
| 12129022 | Retainer 32F MIC/P 100W | 3.27 |
| 12129023 | Retainer 32F MIC/P 100W | 3.27 |
| 12129025 | Connector 32F MIC/P 100W | 3.27 |
| 12129026 | Seal Connector 100W | 3.27 |
| 12129030 | Strain Relief 32W MIC/P 100W RH | 3.27 |
| 12129051 | TPA Lamp Socket C2 | 6.8 |
| 12129052 | Terminal Lamp Socket Contact Sealed | 6.3 |
| 12129053 | Terminal Lamp Socket Ground Sealed | 6.3 |
| 12129057 | TPA Lamp Socket B1 | 6.8 |
| 12129061 | Terminal F M/P 280 Tangless | 2.24 |
| 12129081 | Connector 2F M/P 280 FlexLock | 2.26 |
| 12129082 | Connector 2F M/P 280 FlexLock | 2.26 |
| 12129083 | TPA M/P 280 | 2.26 |
| 12129088 | Connector 8F M/P 280 FlexLock | 2.106 |
| 12129121 | Electrical Center Base (4 Modules) | 7.15 |
| 12129124 | TPA 6F M/P 150,280 | 2.78 |
| 12129135 | Connector 4M M/P 280 | 2.27 |
| 12129136 | Connector 4F M/P 280 FlexLock | 2.27 |
| 12129137 | TPA M/P 280 | 2.27 |
| 12129138 | TPA M/P 280 | 2.27 |
| 12129140 | Connector Assembly 2F M/P 280.1 Pull-To-Seat | 2.39 |
| 12129142 | Connector Assembly 2F M/P 280.1 Pull-To-Seat | 2.39 |
| 12129155 | Connector 2M M/P 280 | 2.26 |
| 12129156 | Connector 2M M/P 280 | 2.26 |
| 12129157 | TPA M/P 280 | 2.26 |
| 12129183 | Retainer 24F MIC/P 100W | 3.26 |
| 12129213 | Secondary Lock | 2.96 |
| 12129214 | Secondary Lock | 2.96 |
| 12129221 | Terminal Battery Ring | 9.7 |
| 12129222 | Terminal Battery Ring | 9.5 |
| 12129225 | Connector 24F MIC/P 100W | 3.26 |
| 12129340 | Connector Assembly 32M MIC/P 100 | 3.17 |
| 12129341 | Connector Assembly 32M MIC/P 100 | 3.17 |
| 12129342 | Connector Assembly 32M MIC/P 100 | 3.17 |
| 12129369 | Connector Assembly 32M MIC/P 100 | 3.17 |
| 12129373 | Terminal F M/P 150 Tangless | 2.2 |
| 12129409 | Terminal F M/P 280 Tangless Sealed | 2.30 |
| 12129424 | Terminal F M/P 280 Tangless | 2.24 |
| 12129425 | Terminal F M/P 280 Tangless | 2.24 |
| 12129433 | Terminal Battery Ring | 9.5 |
| 12129435 | Terminal Battery Ring | 9.5 |
| 12129437 | Terminal Battery Ring | 9.5 |
| 12129465 | Terminal Battery Ring | 9.7 |
| 12129484 | Terminal F M/P 150 Tangless | 2.2 |
| 12129487 | Connector Assembly 2F M/P 280 | 2.38 |
| 12129489 | Connector 3F M/P 280 FlexLock | 2.27 |
| 12129490 | Connector 3M M/P 280 | 2.27 |
| 12129491 | TPA M/P 280 | 2.27 |
| 12129492 | TPA M/P 280 | 2.27 |
| 12129493 | Terminal F M/P 280 Sealed | 2.30 |
| 12129494 | Terminal F M/P 280 | 2.24 |
| 12129497 | Terminal M M/P 280 Sealed | 2.31 |
| 12129498 | Terminal M M/P 280 | 2.25 |
| 12129565 | Connector Assembly 4F M/P 280 Sealed | 2.34 |
| 12129596 | Sensor Connector Assembly 2M M/P 150 | 8.4 |
| 12129598 | Terminal Battery Ring | 9.4 |
| 12129600 | Connector 4M M/P 280 Sealed | 2.34 |
| 12129613 | Connector Assembly 7F M/P 280 FlexLock Sealed | 2.35 |
| 12129614 | Connector 7M M/P 280 Sealed | 2.35 |
| 12129615 | Connector 3M M/P 150 | 2.14 |
| 12129628 | Terminal Battery Ring | 9.5 |
| 12129651 | Terminal Battery Ring | 9.5 |
| 12129663 | Terminal F M/P 280 Tangless | 2.24 |
| 12129669 | Secondary Lock | 2.95 |
| 12129670 | Secondary Lock | 2.95 |
| 12129672 | Connector Seal | 2.95 |
| 12129691 | Sensor Connector Assembly M M/P 150 | 8.14 |
| 12129715 | Connector 6F M/P 280 FlexLock | 7.26 |
| 12129716 | Connector Assembly 4F M/P 280 FlexLock | 7.30 |
| 12129822 | Assembly Terminal Ring & Washer | 9.2 |
| 12129833 | Convenience Center | 7.17 |
| 12129834 | Secondary Lock | 7.17 |
| 12129835 | Secondary Lock | 7.17 |
| 12129836 | Secondary Lock | 7.17 |
| 12129837 | Secondary Lock | 7.17 |
| 12129842 | Connector 6F M/P 280,630 | 2.76 |

| Part # | Description | Page |
|---|---|---|
| 12129909 | Seal Lamp Socket Wedge Base W3 | 6.4 |
| 12129938 | Connector 2M M/P 630 | 2.54 |
| 12129939 | Connector 2F M/P 630 | 2.54 |
| 12129940 | TPA M/P 630 | 2.54 |
| 12131283 | Connector 4F M/P 150 | 2.8 |
| 12131285 | Connector 4M M/P 150 | 2.8 |
| 12131317 | Connector 9F Mixed 280, 630 | 7.27 |
| 12131358 | Secondary Lock | 2.9 |
| 12131359 | Secondary Lock | 7.28 |
| 12131361 | Secondary Lock | 2.8 |
| 12131370 | Secondary Lock | 2.9 |
| 12131372 | Secondary Lock | 2.8 |
| 12131423 | Terminal F Ducon 0.8 | 5.2 |
| 12131448 | Terminal AF Central Electric Fuseblock | 7.7 |
| 12131455 | Terminal AF Central Electric Fuseblock | 7.7 |
| 12131456 | Terminal AF Central Electric Fuseblock | 7.7 |
| 12131543 | TPA M/P 480 | 2.48 |
| 12131592 | Connector Assembly 3F M/P 480 Sealed | 2.48 |
| 12143692 | OBD II (3 Ft./915.0) | 2.19 |
| 12143693 | OBD II (8 Ft./2440.0) | 2.19 |
| 12143694 | OBD II (12 Ft./3660.0) | 2.19 |
| 12146045 | Connector Assembly 5F M/P 150 | 2.15 |
| 12146104 | Cover Inline AutoFuse | 7.30 |
| 12146281 | Electrical Center | 7.19 |
| 12146283 | Secondary Lock | 7.19 |
| 12146284 | Secondary Lock | 7.19 |
| 12146286 | Cover Wire Dress | 7.19 |
| 12146360 | Terminal Battery Ring | 9.4 |
| 12146361 | Terminal Battery Ring | 9.4 |
| 12146362 | Terminal Battery Ring | 9.4 |
| 12146363 | Terminal Battery Ring | 9.4 |
| 12146364 | Terminal Battery Ring | 9.4 |
| 12146365 | Terminal Battery Ring | 9.4 |
| 12146366 | Terminal Battery Ring | 9.4 |
| 12146398 | Seal Lamp Socket | 6.7 |
| 12146401 | Terminal Battery Ring | 9.5 |
| 12146418 | Lamp Socket Wedge Base W2 Right Angle | 6.7 |
| 12146425 | Terminal Battery Ring | 9.4 |
| 12146429 | Terminal Battery Ring | 9.4 |
| 12146447 | Terminal F MIC/P 100 | 3.2 |
| 12146448 | Terminal F MIC/P 100 | 3.2 |
| 12146464 | Terminal Battery Ring | 9.7 |
| 12146466 | Terminal Battery Ring | 9.7 |
| 12146467 | Terminal Battery Ring | 9.7 |
| 12146471 | Terminal Battery Ring | 9.5 |
| 12146487 | Terminal Battery Ring | 9.5 |
| 12146506 | Terminal Battery Ring | 9.5 |
| 12146564 | Assembly Terminal 4F MAXI Bus Bar | 7.6 |
| 12146579 | Terminal Battery Ring | 9.5 |
| 12146713 | Terminal Battery Ring | 9.4 |
| 12146718 | Terminal Battery Ring | 9.6 |
| 12146724 | Connector 8M M/P 280 | 2.106 |
| 12146735 | Connector 8M M/P 280 | 2.106 |
| 12146736 | Terminal Battery Ring | 9.5 |
| 12146744 | Terminal Battery Ring | 9.4 |
| 12146745 | Terminal Battery Ring | 9.4 |
| 12146805 | Secondary Lock | 7.18 |
| 12146815 | Hybrid Module | 7.13 |
| 12146816 | Secondary Lock | 7.13 |
| 12146817 | Secondary Lock | 7.13 |
| 12146830 | Sensor Connector Assembly 2M M/P 150 | 8.4 |
| 12146835 | Secondary Lock | 7.11 |
| 12146836 | Connector 30F M/P 280 FlexLock | 7.11 |
| 12146840 | Connector 7M M/P 280 Sealed | 2.35 |
| 12146841 | Connector Assembly 7F M/P 280 FlexLock Sealed | 2.35 |
| 12146897 | Connector Assembly 2M M/P 150 Sensor | 8.11 |
| 12146933 | Cover M/P 150 | 2.18 |
| 12146947 | Secondary Lock | 7.8 |
| 12146999 | Terminal Battery Ring | 9.5 |
| 12147054 | Connector 5F M/P 150 | 2.8 |
| 12147055 | Secondary Lock | 2.8 |
| 12147060 | TPA Ducon 6.3 | 5.18 |
| 12147066 | Connector 30M Ducon 150, 280 Sealed | 5.26 |
| 12147067 | Connector Assembly 2F Ducon 6.3 Sealed | 5.18 |
| 12147079 | Connector 2F | 7.28 |
| 12147098 | Secondary Lock | 5.15 |
| 12147099 | Connector 5F Ducon 4.8 | 5.15 |
| 12147161 | Connector 30F Ducon 150, 280 | 5.26 |
| 12147299 | Terminal M Ducon 1.5 | 5.7 |
| 12147300 | Terminal M Ducon 1.5 | 5.7 |
| 12147301 | Terminal M Ducon 2.8 | 5.25 |
| 12147302 | Terminal F Ducon 1.5 | 5.6 |
| 12147303 | Terminal F Ducon 1.5 | 5.6 |
| 12147304 | Terminal F Ducon 2.8 | 5.24 |
| 12147400 | Terminal M Ducon 2.8 | 5.25 |
| 12147451 | Terminal F Ducon 2.8 | 5.24 |
| 12147473 | Terminal F Ducon 6.3 Sealed | 5.16 |
| 12147474 | Terminal F Ducon 6.3 Sealed | 5.16 |
| 12147496 | Connector Assembly 10F VF | 6.25 |
| 12147497 | Connector Assembly 15F VF | 6.25 |
| 12147500 | Secondary Lock | 6.25 |
| 12147596 | Terminal F Ducon 4.8 | 5.14 |
| 12147597 | Terminal F Ducon 4.8 | 5.14 |
| 12147875 | Harness Clip | 9.15 |
| 12150547 | Cavity Plug Removal Tool | 10.12 |
| 12150860 | Terminal Removal Tool | 10.8 |
| 12151193 | Terminal Removal Tool | 10.9 |
| 12151194 | Terminal Removal Tool | 10.9 |
| 12151195 | Terminal Removal Tool | 10.9 |
| 12152019 | Retainer Removal Tool | 10.13 |
| 12152395 | Terminal Removal Tool | 10.9 |
| 12155975 | Crimp Tool | 10.7 |
| 12157735 | Terminal F VF 280 | 6.22 |
| 12157736 | Terminal F VF 280 | 6.22 |
| 12157739 | Terminal F DS 280 Sealed | 6.26 |
| 12157740 | Terminal F DS 280 Sealed | 6.26 |
| 12157764 | Terminal VF 6.3 Central Electric Fuse Block | 7.7 |
| 12158095 | Connector 20F Ducon 1.5, 2.8, 4.8 Sealed | 5.23 |
| 12158096 | Secondary Lock | 5.23 |
| 12158097 | Terminal F Ducon 1.5 Sealed | 5.20 |
| 12158098 | Terminal F Ducon 2.8 Sealed | 5.10 |
| 12158100 | Connector 4F | 7.28 |
| 12158101 | Secondary Lock | 7.28 |
| 12158104 | Terminal M Ducon 1.5 Sealed | 5.21 |
| 12158456 | Connector Assembly 3F DS Sealed | 6.27 |
| 12158457 | Connector Assembly 5F DS Sealed | 6.27 |
| 12160209 | Cover Battery Connection | 9.7 |
| 12160210 | Cover Battery Connection | 9.7 |
| 12160222 | Terminal F M/P 150 Sealed | 2.12 |
| 12160223 | Terminal F M/P 150 Sealed | 2.12 |
| 12160229 | Terminal Battery Ring | 9.5 |
| 12160231 | Terminal Battery Ring | 9.4 |
| 12160232 | Terminal Battery Ring | 9.5 |
| 12160233 | Terminal Battery Ring | 9.5 |
| 12160242 | Terminal Battery Ring | 9.5 |
| 12160244 | Sensor Connector Assembly 2M M/P 150 | 8.5 |
| 12160245 | Sensor Connector Assembly 2M M/P 150 | 8.5 |
| 12160246 | Sensor Connector Assembly 2M M/P 150 | 8.6 |
| 12160277 | Cover Shipping | 7.16 |
| 12160281 | Terminal Battery Ring | 9.5 |
| 12160386 | Assembly Lamp Socket B1 Base Right Angle | 6.8 |
| 12160390 | Assembly Lamp Socket C2 Base Right Angle | 6.8 |
| 12160392 | Assembly Lamp Socket C2 BSE | 6.8 |
| 12160393 | Lamp Socket Wedge Base W3 Right Angle | 6.4 |
| 12160394 | Lamp Socket Wedge Base W3 Right Angle | 6.4 |
| 12160395 | Lamp Socket Wedge Base W3 Right Angle | 6.4 |
| 12160437 | TPA OBD II | 2.18 |
| 12160443 | Terminal Battery Ring | 9.5 |
| 12160446 | Assembly Header Connector 10M M/P 150 | 2.103 |
| 12160504 | Hybrid Module 36F M/P 280 FlexLock | 7.12 |
| 12160541 | Secondary Lock | 7.12 |
| 12160635 | Terminal 1F M/P 280 Bus Bar | 7.4 |
| 12160636 | Terminal 1F M/P 280 Bus Bar | 7.4 |
| 12160637 | Terminal 1F M/P 280 Bus Bar | 7.4 |
| 12160638 | Terminal 1F M/P 280 Bus Bar | 7.4 |
| 12160640 | Terminal 1F M/P 280 Bus Bar | 7.4 |
| 12160641 | Terminal 1F M/P 280 Bus Bar | 7.4 |
| 12160642 | Terminal 1F M/P 280 Bus Bar | 7.4 |
| 12160643 | Terminal 1F M/P 280 Bus Bar | 7.4 |
| 12160644 | Terminal 1F M/P 280 Bus Bar | 7.4 |
| 12160645 | Terminal 1F M/P 280 Bus Bar | 7.4 |
| 12160646 | Terminal 1F M/P 280 Bus Bar | 7.4 |
| 12160648 | Terminal 2F M/P 280 Bus Bar | 7.4 |
| 12160649 | Terminal 2F M/P 280 Bus Bar | 7.4 |
| 12160650 | Terminal 2F M/P 280 Bus Bar | 7.4 |
| 12160652 | Terminal 3F M/P 280 Bus Bar | 7.4 |
| 12160653 | Terminal 3F M/P 280 Bus Bar | 7.4 |
| 12160654 | Terminal 3F M/P 280 Bus Bar | 7.4 |
| 12160655 | Terminal 3F M/P 280 Bus Bar | 7.4 |
| 12160657 | Terminal 4F M/P 280 Bus Bar | 7.4 |
| 12160658 | Terminal 4F M/P 280 Bus Bar | 7.4 |
| 12160660 | Terminal 5F M/P 280 Bus Bar | 7.4 |
| 12160661 | Terminal 5F M/P 280 Bus Bar | 7.4 |
| 12160662 | Terminal 6F M/P 280 Bus Bar | 7.4 |
| 12160663 | Terminal 1F M/P 280 Bus Bar | 7.4 |
| 12160664 | Terminal 3F M/P 280 Bus Bar | 7.4 |
| 12160665 | Terminal 1F M/P 280 Bus Bar | 7.4 |
| 12160666 | Terminal 2F M/P 280 Bus Bar | 7.4 |
| 12160667 | Terminal 1F M/P 280 Bus Bar | 7.4 |
| 12160674 | Shunt 3M M/P 280 MAXI/MINI | 7.13 |
| 12160677 | Secondary Lock | 7.18 |
| 12160678 | Secondary Lock | 7.18 |
| 12160679 | Secondary Lock | 7.18 |
| 12160759 | Bolt Stud Hex Head | 7.19 |
| 12160765 | Cover Electrical Center | 7.19 |
| 12160777 | Assembly Header Connector 56M MIC/P 100 | 3.21 |
| 12160778 | Connector 24F MIC/P 100 | 3.21 |
| 12160779 | Connector 32F MIC/P 100 | 3.21 |
| 12160809 | Shroud | 2.95 |
| 12160829 | MAXI Fuse Assembly Module | 7.9 |
| 12160855 | Assembly Sensor Temperature Transmission | 8.13 |
| 12160861 | Assembly Header Connector 64M MIC/P 100W | 3.22 |
| 12160893 | Connector 1F M/P 800 MAXI Fuse | 2.64 |
| 12160894 | Connector 1M M/P 800 FlexLock MAXI | 2.64 |

| Part # | Description | Page |
|---|---|---|
| 12160895 | TPA M/P 800 | 2.64 |
| 12160897 | Cover Convenience Center | 7.10 |
| 12160906 | Cover Convenience Center | 7.17 |
| 12160947 | Sensor Temp Discharge Air | 8.8 |
| 12160959 | Connector 30M M/P 280, 480 Sealed | 2.93 |
| 12161119 | Terminal Battery Ring | 9.5 |
| 12161133 | Terminal Battery Ring | 9.5 |
| 12161170 | Terminal Battery Ring | 9.5 |
| 12161184 | Terminal F M/P 150.2 Pull-To-Seat | 2.12 |
| 12161185 | CPA Slide Lock Assist | 2.36 |
| 12161186 | Connector 15F M/P 280 FlexLock Sealed | 2.36 |
| 12161187 | Connector 15M M/P 280 Sealed | 2.36 |
| 12161191 | Assembly Shroud & Gasket | 2.95 |
| 12162000 | Connector 2M M/P 150 Sealed | 2.14 |
| 12162017 | Connector Assembly 2F M/P 150 | 2.21 |
| 12162068 | M/P 480 Cable Seal | 2.46 |
| 12162098 | Terminal Ring | 9.3 |
| 12162099 | Terminal Ring | 9.3 |
| 12162100 | Terminal Ring | 9.3 |
| 12162102 | Connector 4M M/P 150 Sealed | 2.15 |
| 12162144 | Connector Assembly 4F M/P 150 Sealed | 2.15 |
| 12162182 | Connector Assembly 3F M/P 150.2 Pull-To-Seat | 2.22 |
| 12162185 | Connector Assembly 3F M/P 150.2 Pull-To-Seat | 1.11 |
| 12162188 | Connector Assembly 4F M/P 150.2 Pull-To-Seat | 2.22 |
| 12162189 | Connector Assembly 4F M/P 150.2 Pull-To-Seat | 1.11 |
| 12162190 | Connector Assembly 4F M/P 150.2 Pull-To-Seat | 1.11 |
| 12162191 | Connector Assembly 4F M/P 150.2 Pull-To-Seat | 2.22 |
| 12162193 | Connector Assembly 2F M/P 150.2 Pull-To-Seat | 2.22 |
| 12162194 | Connector Assembly 2F M/P 150.2 Pull-To-Seat | 1.11 |
| 12162195 | Connector Assembly 2F M/P 150.2 Pull-To-Seat | 1.11 |
| 12162197 | Connector Assembly 2F M/P 150.2 Pull-To-Seat | 2.22 |
| 12162198 | Connector Assembly 2F M/P 150.2 Pull-To-Seat | 2.22 |
| 12162199 | Connector Assembly 2F M/P 150.2 Pull-To-Seat | 2.22 |
| 12162210 | Connector Assembly 6F M/P 150.2 Pull-To-Seat | 2.22 |
| 12162215 | Connector Assembly 2F M/P 150.2 Pull-To-Seat | 2.22 |
| 12162216 | Connector Assembly 2F M/P 150.2 Pull-To-Seat | 2.22 |
| 12162217 | Connector Assembly 2F M/P 150.2 Pull-To-Seat | 2.22 |
| 12162218 | Connector Assembly 2F M/P 150.2 Pull-To-Seat | 2.22 |
| 12162222 | Lamp Socket Wedge Base W2 | 6.6 |
| 12162223 | Lamp Socket Wedge Base W2 | 6.6 |
| 12162229 | Connector 6F M/P 280, 630 | 2.76 |
| 12162260 | Connector Assembly 6F M/P 150.2 Pull-To-Seat | 2.22 |
| 12162261 | Connector Assembly 6F M/P 150.2 Pull-To-Seat | 2.22 |
| 12162279 | Connector Assembly 3F M/P 150.2 Pull-To-Seat | 1.11 |
| 12162280 | Connector Assembly 3F M/P 150.2 Pull-To-Seat | 2.22 |
| 12162299 | TPA M/P 630 | 2.76 |
| 12162300 | TPA M/P 280 | 2.76 |
| 12162301 | TPA M/P 630 | 2.76 |
| 12162343 | Connector 2M M/P 150 Sealed | 2.14 |
| 12162365 | Cover Electrical Center | 7.19 |
| 12162412 | Stabilizer 25M M/P | 2.84 |
| 12162413 | Stabilizer 17M M/P | 2.84 |
| 12162512 | Connector 3F M/P 480 | 2.49 |
| 12162527 | Shroud Sliding | 2.96 |
| 12162573 | Stabilizer 78M M/P | 2.96 |
| 12162595 | Terminal F M/P 280 | 2.24 |
| 12162596 | Terminal F M/P 280 | 2.24 |
| 12162597 | Terminal F M/P 280 | 2.24 |
| 12162932 | Assembly Terminal Ring & Washer | 9.2 |
| 12162998 | Assembly Connector 9F M/P 280, 630 | 7.27 |
| 12176387 | Terminal F M/P 280 Sealed | 2.30 |
| 12176388 | Terminal F M/P 280 Sealed | 2.30 |
| 12176389 | Terminal F M/P 280 Sealed | 2.30 |
| 12176445 | GT 280 Female Connector Assembly Unsealed | 1.14 |
| 12176446 | GT 280 Female Connector Assembly Unsealed | 1.14 |
| 12176460 | Connector 12F GT 150 Splice Saver | 6.11 |
| 12176462 | TPA 12F GT 150 | 6.11 |
| 12176469 | Assembly CAP 2-6M GT 150 Splice Saver | 6.11 |
| 12176473 | Connector 4-3F M/P 280 Splice Saver | 6.11 |
| 12176475 | TPA 12F M/P 280 | 6.11 |
| 12176478 | Assembly CAP 4-3M M/P 280 Splice Saver | 6.11 |
| 12176513 | TPA 12W M/P 280 | 6.12 |
| 12176593 | Terminal Battery Ring | 9.5 |
| 12176640 | Spacer Lock | 2.36 |
| 12176836 | GT 280 Female Connector Assembly Unsealed | 1.14 |
| 12176852 | Terminal Lamp Socket Wedge Base | 6.3 |
| 12176853 | Terminal Lamp Socket Wedge Base | 6.3 |
| 12176865 | TPA M/P 280 | 2.36 |
| 12177082 | TPA M/P 150 | 2.17 |
| 12177145 | Base Fuseblock MINI 56F | 7.8 |
| 12177161 | Lamp Socket Insert w/Terminals | 6.4 |
| 12177163 | Lamp Socket Insert w/Terminals | 6.4 |
| 12177296 | Terminal Battery Positive | 9.6 |
| 12177297 | Terminal Battery Negative | 9.6 |
| 12177298 | Terminal Battery Positive | 9.6 |
| 12177299 | Terminal Battery Negative | 9.6 |
| 12180082 | Retainer Removal Tool | 10.13 |
| 12184934 | Connector 15M Ducon 1.5 | 5.9 |
| 12184935 | Secondary Lock | 5.9 |
| 12184963 | Connector 12M Ducon 1.5 | 5.8 |
| 12185000 | TPA Ducon 2.8 | 5.12 |
| 12185004 | Connector 11F Ducon 2.8, 4.8 Sealed | 5.22 |
| 12185005 | Secondary Lock | 5.22 |
| 12185008 | Terminal F Ducon 2.8 Sealed | 5.10 |
| 12185009 | Terminal F Ducon 4.8 Sealed | 5.20 |
| 12185026 | Connector 2F Ducon 2.8 Sealed | 5.13 |
| 12185027 | TPA Ducon 2.8 | 5.13 |
| 12185079 | Ring Ducon | 5.27 |
| 12185080 | Secondary Lock | 5.9 |
| 12185081 | Connector 15F Ducon 1.5 | 5.9 |
| 12185082 | Connector Ring Ducon | 5.27 |
| 12185083 | Two Position Carrier | 9.16 |
| 12185085 | Connector 9M Ducon 1.5 | 5.8 |
| 12185088 | Connector 30F Ducon 1.5, 2.8 | 5.27 |
| 12185126 | Connector 6M Ducon 2.8 Sealed | 5.12 |
| 12185129 | Terminal M Ducon 2.8 Sealed | 5.11 |
| 12185227 | Terminal F Ducon 4.8 | 5.14 |
| 12185235 | Terminal M Ducon 4.8 Sealed | 5.21 |
| 12185236 | Terminal M Ducon 4.8 Sealed | 5.21 |
| 12185237 | Terminal M Ducon 2.8 Sealed | 5.11 |
| 12185243 | Secondary Lock | 6.25 |
| 12185268 | Terminal VF 6.3 Central Electric Fuse Block | 7.7 |
| 12185269 | Terminal VF 6.3 Central Electric Fuse Block | 7.7 |
| 12185277 | Holder Ducon | 5.22 |
| 12185278 | Connector 11M Ducon 2.8, 4.8 Sealed | 5.22 |
| 12185279 | Cover M/P 150 | 2.18 |
| 12185280 | Connector 16F M/P 150 | 2.18 |
| 12185284 | Connector 12F Ducon 1.5 | 5.8 |
| 12185521 | Connector 10F VF | 6.25 |
| 12185550 | Terminal F Ducon 4.8 Sealed | 5.20 |
| 12185636 | Connector 5M M/P 150 | 2.8 |
| 12185643 | Fuse Extractor | 7.20 |
| 12186041 | Assembly Header Connector 32M MIC/P 100W | 3.27 |
| 12186043 | Assembly Header Connector 32M MIC/P 100W | 3.27 |
| 12186320 | Terminal Lamp Socket Wedge Base Sealed | 6.3 |
| 12186347 | Connector Assembly 6F M/P 150, 280 Sealed | 2.78 |
| 12186353 | Clip Connector | 9.13 |
| 12186400 | Connector 5M M/P 280 Sealed | 2.34 |
| 12186869 | Stabilizer 56M | 2.85 |
| 12191005 | Terminal Battery Ring | 9.6 |
| 12191050 | Assembly Header Connector 40M MIC/P 100 | 3.19 |
| 12191057 | Terminal Ring | 9.2 |
| 12191140 | Assembly Header Connector 48M MIC/P 100 | 3.20 |
| 12191152 | GT 150 Cable Seal | 1.6 |
| 12191153 | GT 150 Cable Seal | 1.6 |
| 12191154 | GT 280 Cable Seal | 1.38 |
| 12191155 | GT 150 Cable Seal | 1.10 |
| 12191156 | GT 280 Cable Seal | 1.38 |
| 12191157 | Assembly Seal Cable 1W GT | 1.38 |
| 12191216 | Connector 12F GT 150 Splice Saver | 6.11 |
| 12191217 | Assembly CAP 12M GT 150 Splice Saver | 6.11 |
| 12191220 | Terminal Battery Ring | 9.4 |
| 12191221 | GT 280 Cable Seals | 1.18 |
| 12191222 | GT 280 Cable Seals | 1.18 |
| 12191223 | GT 280 Cable Seals | 1.18 |
| 12191231 | Seal Cable | 9.8 |
| 12191235 | Seal Cable 1W GT | 1.18 |
| 12191243 | Lamp Socket Wedge Base W3 | 6.5 |
| 12191293 | Assembly Header Connector 64M MIC/P 100 | 3.22 |
| 12191375 | Connector 16F MIC/P 100 | 3.22 |
| 12191461 | Terminal Battery Ring | 9.6 |
| 12191487 | Connector Assembly 38M M/P 280, 630 | 2.95 |
| 12191497 | Electrical Center Base (1 Module) | 7.14 |
| 12191522 | TPA Lamp Socket | 6.7 |
| 12191544 | Module MINI Fuse 40F | 7.8 |
| 12191773 | Terminal Battery Ring | 9.6 |
| 12191787 | Terminal Battery Ring | 9.6 |
| 12191811 | Terminal F GT 150 | 1.2 |
| 12191812 | Terminal F GT 150 | 1.2 |
| 12191818 | Terminal F GT 150 Sealed | 1.6 |
| 12191819 | Terminal F GT 150 Sealed | 1.6 |
| 12191847 | Hybrid Assembly Module | 7.13 |
| 12191848 | Assembly Fuseblock F MINI, MAXI | 7.13 |
| 12191849 | Secondary Lock | 7.13 |

| Part # | Description | Page |
|---|---|---|
| 12191900 | Connector 12F GT 150 Splice Saver Sealed | 6.14 |
| 12191901 | TPA 12F GT 150 Splice Saver | 6.14 |
| 12191904 | Assembly CAP 12M GT 150 Splice Saver | 6.14 |
| 12191905 | Connector 3-4F GT 150 Splice Saver Sealed | 6.14 |
| 12191908 | Assembly CAP 3-4M GT 150 Splice Saver | 6.14 |
| 12191910 | Connector 6F GT 150 Splice Saver Sealed | 6.14 |
| 12191911 | TPA 6F GT 150 Splice Saver | 6.14 |
| 12191914 | Assembly Cap 6M GT 150 Splice Saver | 6.14 |
| 12196895 | Connector Assembly 2F DS Sealed | 6.27 |
| 12197134 | Cover Ducon | 5.22 |
| 12197559 | Terminal F VF 280 | 6.22 |
| 12198103 | Terminal F DS 280 Sealed | 6.26 |
| 12198151 | Terminal F VF 280 | 6.22 |
| 12198198 | Plug Cavity | 9.8 |
| 12198409 | Connector Assembly 9F VF | 6.23 |
| 12198533 | Secondary Lock | 5.8 |
| 13510085 | Connector Assembly 2F GT 150 Sealed | 1.8 |
| 13510099 | Connector Assembly 2M GT 150 Sealed | 1.8 |
| 13511131 | GT 150 Female Connector Assembly Sealed | 1.6 |
| 13511134 | GT 150 Female Connector Assembly Sealed | 1.6 |
| 13512092 | GT 150 Female Connector Assembly Sealed | 1.6 |
| 13513467 | MicroHVT 1R 4F | 4.50 |
| 13513468 | MicroHVT 1R 8F w/CPA | 4.54 |
| 13513469 | MicroHVT Female w/CPA | 4.50 |
| 13513470 | MicroHVT 1R 8F w/CPA | 4.54 |
| 13513473 | MicroHVT 4F Secondary Lock | 4.50 |
| 13513474 | MicroHVT 6F Secondary Lock | 4.52 |
| 13513475 | MicroHVT 8F Secondary Lock | 4.54 |
| 13516905 | Connector Assembly 16F GT 150 | 1.5 |
| 13516907 | Connector Assembly 16M GT 150 | 1.5 |
| 13517352 | GT 280 Female Connector Assembly Sealed | 1.18 |
| 13518845 | Connector Assembly 2F GT 280 Sealed | 1.20 |
| 13518847 | Connector Assembly 2M GT 280 Sealed | 1.20 |
| 13519047 | Connector Assembly 3F GT 150 Sealed | 1.8 |
| 13519049 | Connector Assembly 3M GT 150 Sealed | 1.8 |
| 13519051 | Connector Assembly 5F GT 150 Sealed | 1.8 |
| 13519053 | Connector Assembly 5M GT 150 Sealed | 1.8 |
| 13520382 | GT 150 Female Connector Assembly Unsealed USCAR | 1.2 |
| 13521455 | Connector Assembly 3F GT 280 Sealed | 1.20 |
| 13521457 | Connector Assembly 3M GT 280 Sealed | 1.20 |
| 13521459 | Connector Assembly 4F GT 280 Sealed | 1.20 |
| 13521461 | Connector Assembly 4M GT 280 Sealed | 1.20 |
| 13521463 | Connector Assembly 5F GT 280 Sealed | 1.20 |
| 13521465 | Connector Assembly 5M GT 280 Sealed | 1.20 |
| 13521467 | Connector Assembly 6F GT 280 Sealed | 1.20 |
| 13521469 | Connector Assembly 6M GT 280 Sealed | 1.20 |
| 13521472 | Connector Assembly 8F GT 150 | 1.5 |
| 13521474 | Connector Assembly 8M GT 150 | 1.5 |
| 13521476 | Connector Assembly 14F GT 150 | 1.5 |
| 13521478 | Connector Assembly 14M GT 150 | 1.5 |
| 13523064 | Connector Assembly 12F GT 280 | 1.17 |
| 13526678 | GT 150 Female Terminal Unsealed | 1.2 |
| 13526680 | GT 150 Female Terminal Unsealed | 1.2 |
| 13530777 | Connector Assembly 12F GT 150 Sealed | 1.9 |
| 13531954 | MicroHVT 1R 4F | 4.50 |
| 13531958 | MicroHVT 1R 4F w/CPA | 4.50 |
| 13542790 | GT 150 Female Connector Assembly | 1.6 |
| 13577943 | Passthrough Shroud | 2.93 |
| 13583664 | GT 150 Female Connector Assembly Unsealed USCAR | 1.2 |
| 13586106 | GT 150 Female Connector Assembly Unsealed USCAR | 1.2 |
| 13586110 | GT 150 Female Connector Assembly Unsealed USCAR | 1.2 |
| 13586114 | GT 150 Female Connector Assembly Unsealed USCAR | 1.2 |
| 13586118 | GT 150 Female Connector Assembly Unsealed USCAR | 1.2 |
| 13586122 | GT 150 Female Connector Assembly Unsealed USCAR | 1.2 |
| 13586126 | GT 150 Female Connector Assembly Unsealed USCAR | 1.2 |
| 13586130 | GT 150 Female Connector Assembly Unsealed USCAR | 1.2 |
| 13586134 | GT 150 Female Connector Assembly Unsealed USCAR | 1.2 |
| 13586138 | GT 150 Female Connector Assembly Unsealed USCAR | 1.2 |
| 15300002 | Connector 2M M/P 280 Sealed | 2.33 |
| 15300003 | Connector 3M M/P 280 | 2.33 |
| 15300014 | TPA M/P 280 | 2.33 |
| 15300015 | TPA M/P 280 | 2.33 |
| 15300016 | TPA M/P 280 | 2.34 |
| 15300027 | Connector Assembly 2F M/P 280 Sealed | 2.33 |
| 15304621 | Terminal Lamp Socket Ground Sealed | 6.3 |
| 15304622 | Terminal Lamp Socket Contact Sealed | 6.3 |
| 15304690 | Connector 18F | 1.34 |
| 15304692 | Connector 18F GT 150, 280 | 1.34 |
| 15304694 | TPA F GT 150, 280 | 1.34 |
| 15304695 | TPA M GT 150, 280 | 1.34 |
| 15304701 | Terminal M GT 150 | 1.3 |
| 15304702 | Terminal M GT 150 | 1.3 |
| 15304710 | Terminal F GT 280 | 1.14 |
| 15304711 | Terminal F GT 280 | 1.14 |
| 15304712 | Terminal F GT 280 | 1.14 |
| 15304713 | Terminal F GT 280 | 1.14 |
| 15304715 | Terminal F GT 280 Sealed | 1.38 |
| 15304716 | Terminal F GT 280 Sealed | 1.38 |
| 15304717 | Terminal F GT 280 Sealed | 1.38 |
| 15304718 | Terminal F GT 280 Sealed | 1.18 |
| 15304719 | Terminal F GT 280 Sealed | 1.18 |
| 15304720 | Terminal F GT 280 Sealed | 1.18 |
| 15304722 | Terminal M GT 280 | 1.15 |
| 15304723 | Terminal M GT 280 | 1.15 |
| 15304724 | Terminal M GT 280 | 1.15 |
| 15304725 | Terminal M GT 280 | 1.15 |
| 15304727 | Terminal M GT 280 Sealed | 1.39 |
| 15304728 | Terminal M GT 280 Sealed | 1.39 |
| 15304729 | Terminal M GT 280 Sealed | 1.39 |
| 15304730 | Terminal M GT 280 Sealed | 1.39 |
| 15304731 | Terminal M GT 280 Sealed | 1.39 |
| 15304732 | Terminal M GT 280 Sealed | 1.39 |
| 15304841 | TPA 40M GT 150, 280 | 1.37 |
| 15304842 | TPA 40F GT 150, 280 | 1.37 |
| 15304850 | Terminal Battery Ring | 9.5 |
| 15304876 | Cover Battery Connection | 9.7 |
| 15304878 | Cover Battery Connection | 9.7 |
| 15304903 | TPA 20M GT 150, 280 | 1.41 |
| 15304904 | TPA 20F GT 150, 280 | 1.41 |
| 15304905 | Seal Connector | 1.41 |
| 15304908 | Connector 30F GT 150, 280 | 1.36 |
| 15304912 | TPA 30M GT 150, 280 | 1.36 |
| 15304913 | TPA 30F GT 150, 280 | 1.36 |
| 15305118 | Terminal Battery Positive | 9.6 |
| 15305119 | Terminal Battery Negative | 9.6 |
| 15305152 | Cover Electrical Center | 7.13 |
| 15305169 | Plug Cavity GT | 1.10 |
| 15305170 | Plug Cavity GT | 1.19 |
| 15305171 | Plug Cavity GT | 1.7 |
| 15305288 | Connector 2-6F M/P 280 Splice Saver | 6.12 |
| 15305289 | Assembly CAP 2-6M M/P 280 Splice Saver | 6.12 |
| 15305291 | Connector 12F M/P 280 Splice Saver | 6.12 |
| 15305292 | Assembly CAP 12M M/P 280 Splice Saver | 6.12 |
| 15305294 | Connector 12F M/P 280 Splice Saver | 6.12 |
| 15305295 | Assembly CAP 12M M/P 280 Splice Saver | 6.12 |
| 15305297 | Connector 12F M/P 280 Splice Saver | 6.12 |
| 15305298 | Assembly Cap 12M M/P 280 Splice Saver | 6.12 |
| 15305351 | Seal Cable 1W GT | 1.10 |
| 15305473 | TPA Lamp Socket Wedge Base W3 | 6.5 |
| 15305504 | Terminal Battery Ring | 9.5 |
| 15305508 | Terminal Battery Ring | 9.6 |
| 15313892 | Stabilizer Removal Tool | 10.13 |
| 15317321 | Lever Lock GT | 1.35 |
| 15317322 | Connector 22M GT 150, 280 | 1.35 |
| 15317323 | TPA 22W GT 150, 280 | 1.35 |
| 15317325 | Connector 22F GT 150, 280 | 1.35 |
| 15317326 | TPA 22W GT 150, 280 | 1.35 |
| 15317352 | Stabilizer 38M | 2.95 |
| 15317380 | Connector 38M GT 150, 280 Sealed | 1.41 |
| 15317550 | Lever Lock GT | 1.34 |
| 15317575 | Connector 16F M/P 150 Tangless | 2.18 |
| 15317651 | Lamp Socket Wedge Base W2 | 6.7 |
| 15317652 | O-Ring | 6.7 |
| 15317694 | Connector 40M GT 150, 280 | 1.44 |
| 15317735 | Connector 30M GT 150, 280 | 1.43 |
| 15317798 | Terminal Battery Ring | 9.5 |
| 15317814 | Terminal M GT 150 Flex Circuit | 1.42 |
| 15317815 | Terminal M GT 280 Flex Circuit | 1.42 |
| 15317828 | TPA 30W GT 150, 280 Flex Circuit | 1.43 |
| 15317832 | CPA GT | 1.4 |
| 15318209 | Terminal Battery Ring | 9.6 |
| 15324032 | Cover Convenience Center | 7.8 |
| 15324063 | TPA M/P 280 | 2.34 |
| 15324070 | TPA M/P 150 | 2.4 |
| 15324332 | TPA M/P 280 | 2.106 |

| Part # | Description | Page |
|---|---|---|
| 15324428 | Assembly Insert Wedge Base W2 | 6.7 |
| 15324456 | TPA M/P 280 | 2.37 |
| 15324525 | TPA M/P 150 | 2.16 |
| 15324722 | TPA Lamp Socket | 6.6 |
| 15324764 | Secondary Lock M/P 280, 480, 630 | 2.85 |
| 15324857 | TPA M/P 280 | 2.34 |
| 15324946 | Assembly Lamp Socket Wedge Base W2 | 6.7 |
| 15324973 | Assembly Seal Cable M/P 150 | 2.12 |
| 15324974 | Assembly Seal Cable M/P 150 | 2.12 |
| 15324975 | Assembly Seal Cable M/P 150 | 2.12 |
| 15324976 | Assembly Seal Cable M/P 150 | 2.12 |
| 15324980 | Assembly Seal Cable M/P & W/P | 2.30 |
| 15324981 | Assembly Seal Cable M/P & W/P | 2.30 |
| 15324982 | Assembly Seal Cable M/P&W/P | 2.30 |
| 15324983 | Assembly Seal Cable M/P & W/P | 2.30 |
| 15324984 | Assembly Seal Cable M/P & W/P | 2.30 |
| 15324985 | Assembly Seal Cable 1W M/P & W/P | 2.30 |
| 15324987 | Assembly Seal Cable M/P 480 | 2.46 |
| 15324988 | Assembly Seal Cable M/P 480 | 2.46 |
| 15324989 | Assembly Seal Cable M/P 480 | 2.46 |
| 15324990 | Assembly Seal Cable M/P 480 | 2.46 |
| 15324991 | Assembly Seal Cable M/P 480 | 2.46 |
| 15324992 | Assembly Seal Cable M/P 480 | 2.46 |
| 15324993 | Assembly Seal Cable M/P 630 | 2.56 |
| 15324994 | Assembly Seal Cable M/P 630 | 2.56 |
| 15324995 | Assembly Seal Cable M/P 630 | 2.56 |
| 15324996 | Assembly Seal Cable 1W M/P 630 | 2.56 |
| 15324997 | Assembly Seal Cable M/P 630 | 2.56 |
| 15326004 | Terminal F GT 280 Sealed | 1.18 |
| 15326063 | Connector 22F GT 150, 280 | 1.35 |
| 15326064 | Connector 22M GT 150, 280 | 1.35 |
| 15326082 | Connector Assembly 18F Mixed GT 150/280 | 1.26 |
| 15326084 | Connector Assembly 16F GT 150, 280 Sealed | 1.30 |
| 15326085 | Connector Assembly 16M GT 150, 280 Sealed | 1.30 |
| 15326177 | Stabilizer 40M GT | 1.44 |
| 15326266 | Terminal F GT 150 Sealed | 1.10 |
| 15326267 | Terminal F GT 150 Sealed | 1.10 |
| 15326268 | Terminal M GT 150 Sealed | 1.7 |
| 15326269 | Terminal M GT 150 Sealed | 1.7 |
| 15326290 | Lamp Socket Wedge Base Right Angle | 6.4 |
| 15326291 | Lamp Socket Wedge Base Right Angle | 6.4 |
| 15326386 | Sensor Connector Assembly 2M M/P 150 | 8.10 |
| 15326389 | Connector Assembly 5F GT 150 | 1.12 |
| 15326416 | GT Mating Connector | 1.43 |
| 15326556 | Connector Assembly 3F GT 150 Sealed | 1.13 |
| 15326559 | Connector Assembly 4F GT 150 | 1.12 |
| 15326654 | Connector Assembly 8F GT 280 Sealed | 1.21 |
| 15326655 | Connector Assembly 8M GT 280 Sealed | 1.21 |
| 15326660 | Connector Assembly 10F GT 280 Sealed | 1.21 |
| 15326661 | Connector Assembly 10M GT 280 Sealed | 1.21 |
| 15326666 | Connector Assembly 16F GT 280 Sealed | 1.21 |
| 15326667 | Connector Assembly 16M GT 280 Sealed | 1.21 |
| 15326678 | Connector Assembly 2M GT 280 Sealed | 1.20 |
| 15326762 | Connector 30M GT 150 | 1.36 |
| 15326799 | Lever Lock GT | 1.36 |
| 15326835 | Connector Assembly 8F GT 150 Sealed | 1.9 |
| 15326840 | Connector Assembly 8M GT 150 Sealed | 1.9 |
| 15326842 | Connector Assembly 10F GT 150 Sealed | 1.9 |
| 15326847 | Connector Assembly 10M GT 150 Sealed | 1.9 |
| 15326854 | Connector Assembly 12M GT 150 Sealed | 1.9 |
| 15326856 | Connector Assembly 14F GT 150 Sealed | 1.9 |
| 15326861 | Connector Assembly 14M GT 150 Sealed | 1.9 |
| 15326863 | Connector Assembly 16F GT 150 Sealed | 1.9 |
| 15326868 | Connector Assembly 16M GT 150 Sealed | 1.9 |
| 15326870 | Connector Assembly 2F GT 280 | 1.16 |
| 15326874 | Connector Assembly 2M GT 280 | 1.16 |
| 15326877 | Connector Assembly 3F GT 280 | 1.16 |
| 15326881 | Connector Assembly 3M GT 280 | 1.16 |
| 15326886 | Connector Assembly 4F GT 280 | 1.16 |
| 15326890 | Connector Assembly 4M GT 280 | 1.16 |
| 15326893 | Connector Assembly 5F GT 280 | 1.16 |
| 15326897 | Connector Assembly 5M GT 280 | 1.16 |
| 15326900 | Connector Assembly 6F GT 280 | 1.16 |
| 15326904 | Connector Assembly 6M GT 280 | 1.16 |
| 15326910 | Connector Assembly 12F GT 280 Sealed | 1.21 |
| 15326915 | Connector 12M GT 280 Sealed | 1.21 |
| 15326917 | Connector Assembly 14F GT 280 Sealed | 1.21 |
| 15326922 | Connector 14M GT 280 Sealed | 1.21 |
| 15326931 | Connector Assembly 10F GT 280 | 1.17 |
| 15326935 | Connector Assembly 10M GT 280 | 1.17 |
| 15326939 | Connector Assembly 12 F Mixed 150/280 Sealed | 1.30 |
| 15326942 | Connector Assembly 12M GT 280 | 1.17 |
| 15326945 | Connector Assembly 14F GT 280 | 1.17 |
| 15326949 | Connector Assembly 14M GT 280 | 1.17 |
| 15326952 | Connector Assembly 16F GT 280 | 1.17 |
| 15326956 | Connector Assembly 16M GT 280 | 1.17 |
| 15327126 | Seal Cable | 9.9 |
| 15327153 | Cover Ducon | 5.28 |
| 15327154 | Connector Module 1, 16M Ducon Sealed | 5.28 |
| 15327155 | Connector Module 2, 16M Ducon Sealed | 5.28 |
| 15327159 | Terminal M Ducon 0.8 | 5.3 |
| 15327160 | Connector 40F Ducon Sealed | 5.28 |
| 15327164 | Connector Ring Ducon | 5.28 |
| 15327190 | Connector 8F Ducon 0.8 | 5.5 |
| 15327192 | Terminal F DS 280 Sealed | 6.26 |
| 15327221 | Connector Assembly 12F VF | 6.23 |
| 15327398 | Terminal F VF 630 | 6.22 |
| 15327399 | Terminal F VF 630 | 6.22 |
| 15327400 | Terminal F VF 630 | 6.22 |
| 15327416 | Connector 26F VF | 6.24 |
| 15327622 | Assembly Module 8F | 7.24 |
| 15327625 | Connector 1F | 7.25 |
| 15327626 | Connector 1F | 7.24 |
| 15327627 | Connector 2F | 7.25 |
| 15327628 | Connector 3F | 7.25 |
| 15327645 | Connector 16F OBDII | 7.22 |
| 15327646 | TPA | 7.22 |
| 15327654 | Connector Module 1, 16F Ducon Sealed | 5.28 |
| 15327655 | Connector Module 2, 16F Ducon Sealed | 5.28 |
| 15327694 | Module Cover | 7.25 |
| 15327747 | Conduit TPA M/P 280 | 2.33 |
| 15327799 | Conduit TPA M/P 150 | 2.14 |
| 15327859 | Seal Cable | 9.8 |
| 15327863 | Seal Cable | 9.8 |
| 15327864 | Seal Cable | 9.9 |
| 15327913 | Seal Cable | 9.8 |
| 15327918 | Seal Cable | 9.8 |
| 15327998 | Seal Cable | 9.9 |
| 15332129 | Connector Assembly 2F GT 150 | 1.4 |
| 15332130 | Connector Assembly 2M GT 150 | 1.4 |
| 15332132 | Connector Assembly 3F GT 150 | 1.4 |
| 15332133 | Connector Assembly 3M GT 150 | 1.4 |
| 15332135 | Connector Assembly 4F GT 150 | 1.4 |
| 15332136 | Connector Assembly 4M GT 150 | 1.4 |
| 15332138 | Connector Assembly 5F GT 150 | 1.4 |
| 15332139 | Connector Assembly 5M GT 150 | 1.4 |
| 15332141 | Connector Assembly 6F GT 150 | 1.4 |
| 15332142 | Connector Assembly 6M GT 150 | 1.4 |
| 15335987 | Connector Assembly 2F GT 150 Sealed | 1.13 |
| 15336001 | Connector Assembly 4F GT 150 | 1.13 |
| 15336004 | Connector Assembly 2F GT 150 Sealed | 1.12 |
| 15336013 | Connector Assembly 6F GT 150 Sealed | 1.12 |
| 15336027 | Connector Assembly 2F GT 150 Sealed | 1.11 |
| 15336034 | Connector Assembly 12M Mixed GT 150, 280 Sealed | 1.30 |
| 15336037 | Connector Assembly 14F GT Mixed 150, 280 Sealed | 1.30 |
| 15336116 | Connector Assembly 2F 280 GT Sealed | 1.22 |
| 15336117 | Connector Assembly 2F 280 GT Sealed | 1.22 |
| 15336121 | Connector Assembly 3F GT 150 Sealed | 1.12 |
| 15336173 | Connector 24M GT 150, 280 Sealed | 1.40 |
| 15336177 | Seal Connector | 1.40 |
| 15336205 | Connector Assembly 12F GT Mixed 150, 280 | 1.26 |
| 15336209 | Connector Assembly 12M GT Mixed 150, 280 | 1.26 |
| 15336219 | Connector Assembly 16F GT Mixed 150, 280 | 1.26 |
| 15336224 | Connector Assembly 16M GT Mixed 150, 280 | 1.26 |
| 15336267 | Lever Lock GT | 1.41 |
| 15336387 | Lever Lock GT | 1.37 |
| 15336467 | Connector 18M GT 150, 280 | 1.34 |
| 15336468 | Connector 18M GT 150, 280 | 1.34 |
| 15336674 | Seal Cable 1W GT 280 | 1.18 |
| 15336766 | Connector 9F Ducon 1.5 | 5.8 |
| 15337197 | Plug Cavity Ducon 2.8 | 5.11 |
| 15337204 | Seal Cable | 9.9 |
| 15337249 | Secondary Lock | 7.28 |
| 15338470 | Seal Cable | 9.9 |
| 15339412 | Seal Cable | 9.8 |
| 15339818 | Connector 4F | 7.28 |
| 15339838 | Seal Cable | 9.8 |
| 15339967 | Seal Cable | 9.8 |
| 15343826 | Seal Cable | 9.8 |
| 15343827 | Seal Cable | 9.8 |
| 15344032 | Seal Cable | 5.16 |
| 15344037 | Connector 20F Ducon 0.8 | 5.4 |

| Part # | Description | Page |
|---|---|---|
| 15344038 | Connector 20M Ducon 0.8 | 5.4 |
| 15344040 | Connector 2F Ducon 2.8 Sealed | 5.13 |
| 15344042 | Connector 2F Ducon 2.8 Sealed | 5.13 |
| 15344052 | Connector Assembly 6F Ducon 2.8 Sealed | 5.12 |
| 15344054 | Connector 2M Ducon 6.3 Sealed | 5.18 |
| 15344060 | Connector 6M Ducon 2.8, 4.8 Sealed | 5.22 |
| 15344061 | Connector 6F Ducon 2.8, 4.8 Sealed | 5.22 |
| 15344069 | Connector 15F Ducon 2.8, 4.8 Sealed | 5.22 |
| 15344072 | Connector 6F Ducon 4.8 | 5.15 |
| 15344104 | Seal Cable | 9.9 |
| 15344324 | Seal Cable | 5.24 |
| 15344628 | Connector 3M M/P 480 Sealed | 2.48 |
| 15344630 | Connector 5F VF | 6.25 |
| 15344631 | Terminal M Ducon 6.3 Sealed | 5.17 |
| 15344632 | Terminal M Ducon 6.3 Sealed | 5.17 |
| 15344643 | Seal Cable | 9.8 |
| 15344644 | Seal Cable | 9.9 |
| 15344645 | Seal Cable | 9.9 |
| 15344646 | Seal Cable | 9.9 |
| 15344647 | Seal Cable | 9.9 |
| 15344665 | Electrical Center | 7.23 |
| 15344666 | Seal Cable | 9.8 |
| 15344856 | Harness Clip | 9.15 |
| 15354635 | Assembly Cap 12M M/P 280 Splice Saver | 6.12 |
| 15354674 | Secondary Lock | 5.8 |
| 15354753 | Terminal Ring | 9.2 |
| 15354754 | Terminal Ring | 9.2 |
| 15354755 | Terminal Ring | 9.2 |
| 15354756 | Terminal Ring | 9.2 |
| 15354757 | Terminal Ring | 9.2 |
| 15354758 | Terminal Ring | 9.2 |
| 15354859 | Lamp Socket Wedge Base Right Angle W3 Sealed | 6.2 |
| 15354864 | Lamp Socket Wedge Base W3 Right Angle | 6.2 |
| 15354865 | Lamp Socket Wedge Base W3 Right Angle | 6.2 |
| 15355268 | Connector Assembly 5F GT 150 | 1.11 |
| 15355317 | Connector Assembly 2F GT 150 Sealed | 1.11 |
| 15355319 | Connector Assembly 2F GT 150 Sealed | 1.11 |
| 15355323 | Connector Assembly 3F GT 150 Sealed | 1.11 |
| 15355325 | Connector Assembly 3F GT 150 Sealed | 1.11 |
| 15355329 | Connector Assembly 4F GT 150 | 1.11 |
| 15355331 | Connector Assembly 4F GT 150 | 1.11 |
| 15355370 | GT 150 Female Connector Assembly Sealed USCAR | 1.6 |
| 15355380 | TPA 20M GT 150, 280 Flex Circuit | 1.44 |
| 15355521 | Terminal Ring | 9.2 |
| 15357040 | Connector 8F M/P 280 Flexlock | 2.106 |
| 15357042 | Assembly Header Connector 32M M/P 280, MIC/P 100 | 3.23 |
| 15357044 | Connector Assembly 32M MIC/P Mixed Sealed | 3.23 |
| 15357046 | Connector Assembly 32M MIC/P Mixed Sealed | 3.23 |
| 15358661 | Base Fuseblock MINI 65F | 7.18 |
| 15358681 | Connector 3M M/P 630 | 2.59 |
| 15359196 | Micro64 16F Secondary Lock | 4.62 |
| 15359287 | Connector 40F GT 150, 280 | 1.37 |
| 15363604 | Seal Cable | 9.9 |
| 15363605 | Seal Cable | 9.9 |
| 15363779 | Seal Cable | 9.9 |
| 15363846 | Connector 25F VF | 6.24 |
| 15363852 | Connector Assembly 16F VF | 6.23 |
| 15363980 | Seal Cable | 9.9 |
| 15363991 | Seal Cable, Ducon | 9.9 |
| 15363992 | Seal Cable, Ducon | 5.10 |
| 15364309 | Connector Assembly 2F DS Sealed | 6.27 |
| 15364318 | Connector Assembly 3F DS Sealed | 6.27 |
| 15366021 | Seal Cable 1W GT | 1.6 |
| 15366022 | Seal Cable 1W GT | 1.10 |
| 15366060 | Seal Cable 1W GT | 1.6 |
| 15366061 | Seal Cable 1W GT 280 | 1.38 |
| 15366063 | Seal Cable 1W GT 280 | 1.38 |
| 15366064 | Seal Cable 1W GT 280 | 1.38 |
| 15366065 | Seal Cable 1W GT 280 | 1.18 |
| 15366066 | Seal Cable 1W GT 280 | 1.18 |
| 15366067 | Seal Cable 1W GT 280 | 1.18 |
| 15366099 | Connector 24F GT 150, 280 Sealed | 1.40 |
| 15369322 | Lever Lock GT | 1.40 |
| 15373421 | PLR 24M GT 150, 280 | 1.40 |
| 15373422 | PLR | 1.40 |
| 15393744 | Connector 40F GT 150, 280 | 1.37 |
| 15394147 | Micro64 Female Terminal | 4.63 |
| 15394149 | Micro64 2R 16F w/CPA | 4.62 |
| 15394150 | Micro64 2R 16F w/CPA | 4.62 |
| 15394151 | Micro64 2R 16F w/CPA | 4.62 |
| 15394152 | Micro64 2R 16F w/CPA | 4.62 |
| 15394153 | Micro64 2R 16F w/CPA | 4.62 |
| 15394154 | Micro64 2R 16F w/CPA | 4.62 |
| 15396848 | Connector 6F M/P 150 | 2.9 |
| 15396849 | Connector 6M M/P 150 | 2.9 |
| 15397577 | Connector Assembly 6F GT 150 Sealed | 1.8 |
| 15397579 | Connector Assembly 6M GT 150 Sealed | 1.8 |
| 15401440 | Micro64 Female Terminal | 4.63 |
| 15402131 | Secondary Lock M/P 150, 280 | 2.86 |
| 15404970 | Micro64 8F Secondary Lock | 4.60 |
| 15406141 | Micro64 2R 8F w/CPA | 4.60 |
| 15406142 | Micro64 2R 8F w/CPA | 4.60 |
| 15410728 | Connector Assembly 4F GT 150 Sealed | 1.11 |
| 15416970 | Micro64 2R 16F | 4.62 |
| 15418982 | Stabilizer 18M GT 150, 280 | 1.34 |
| 15418983 | Stabilizer 22M GT 150, 280 | 1.35 |
| 15418984 | Stabilizer 30M GT 150, 280 | 1.36 |
| 15420150 | 064 Header 2R SM 8W | 4.24 |
| 15420151 | 064 Header 2R SM 8W | 4.24 |
| 15420152 | 064 Header 2R SM 8W | 4.24 |
| 15420153 | 064 Header 2R SM 8W | 4.24 |
| 15420154 | 064 Header 2R SM 8W | 4.24 |
| 15420155 | 064 Header 2R SM 8W | 4.24 |
| 15420156 | 064 Header 2R SM 10W | 4.26 |
| 15420157 | 064 Header 2R SM 10W | 4.26 |
| 15420158 | 064 Header 2R SM 10W | 4.26 |
| 15420159 | 064 Header 2R SM 10W | 4.26 |
| 15420160 | 064 Header 2R SM 10W | 4.26 |
| 15420161 | 064 Header 2R SM 10W | 4.26 |
| 15420162 | 064 Header 2R SM 12W | 4.28 |
| 15420163 | 064 Header 2R SM 12W | 4.28 |
| 15420164 | 064 Header 2R SM 12W | 4.28 |
| 15420165 | 064 Header 2R SM 12W | 4.28 |
| 15420166 | 064 Header 2R SM 12W | 4.28 |
| 15420167 | 064 Header 2R SM 12W | 4.28 |
| 15420168 | 064 Header 2R SM 16W | 4.30 |
| 15420169 | 064 Header 2R SM 16W | 4.30 |
| 15420170 | 064 Header 2R SM 16W | 4.30 |
| 15420171 | 064 Header 2R SM 16W | 4.30 |
| 15420172 | 064 Header 2R SM 16W | 4.30 |
| 15420173 | 064 Header 2R SM 16W | 4.30 |
| 15422562 | Connector Assembly 14M GT Mixed 150, 280 Sealed | 1.30 |
| 15422816 | 064 Header 2R CM 40W | 4.38 |
| 15422817 | 064 Header 2R CM 42W | 4.40 |
| 15422818 | 064 Header 2R CM 44W | 4.42 |
| 15422819 | 064 Header 2R CM 48W | 4.44 |
| 15423524 | Convenience Center | 7.10 |
| 15423672 | 064 Header 2R CM 42W | 4.41 |
| 15423673 | 064 Header 2R CM 44W | 4.43 |
| 15423674 | 064 Header 2R CM 48W | 4.45 |
| 15423679 | 064 Header 2R CM 40W | 4.39 |
| 15423681 | 064 Header 2R CM 32W | 4.36 |
| 15423682 | 064 Header 2R CM 32W | 4.37 |
| 15423716 | 064 Header 2R SM 8W | 4.25 |
| 15423717 | 064 Header 2R SM 8W | 4.25 |
| 15423718 | 064 Header 2R SM 8W | 4.25 |
| 15423719 | 064 Header 2R SM 8W | 4.25 |
| 15423720 | 064 Header 2R SM 8W | 4.25 |
| 15423721 | 064 Header 2R SM 8W | 4.25 |
| 15423722 | 064 Header 2R SM 10W | 4.27 |
| 15423723 | 064 Header 2R SM 10W | 4.27 |
| 15423724 | 064 Header 2R SM 10W | 4.27 |
| 15423725 | 064 Header 2R SM 10W | 4.27 |
| 15423726 | 064 Header 2R SM 10W | 4.27 |
| 15423727 | 064 Header 2R SM 10W | 4.27 |
| 15423728 | 064 Header 2R SM 12W | 4.29 |
| 15423729 | 064 Header 2R SM 12W | 4.29 |
| 15423730 | 064 Header 2R SM 12W | 4.29 |
| 15423731 | 064 Header 2R SM 12W | 4.29 |
| 15423732 | 064 Header 2R SM 12W | 4.29 |
| 15423733 | 064 Header 2R SM 12W | 4.29 |
| 15423734 | 064 Header 2R SM 16W | 4.31 |
| 15423736 | 064 Header 2R SM 16W | 4.31 |
| 15423737 | 064 Header 2R SM 16W | 4.31 |
| 15423738 | 064 Header 2R SM 16W | 4.31 |
| 15423739 | 064 Header 2R SM 16W | 4.31 |
| 15427170 | Clip (Self-Locking) | 9.14 |
| 15429805 | Micro64 2R 16F | 4.62 |
| 15429806 | Micro64 2R 16F | 4.62 |
| 15429807 | Micro64 2R 16F | 4.62 |
| 15429808 | Micro64 2R 16F | 4.62 |
| 15429809 | Micro64 2R 16F | 4.62 |
| 15430291 | 064 Header 2R CM 16W | 4.33 |
| 15430292 | 064 Header 2R CM 16W | 4.32 |
| 15431080 | Micro64 2R 10F w/CPA | 4.61 |
| 15431081 | Micro64 2R 10F w/CPA | 4.61 |
| 15433830 | Micro64 10F Secondary Lock | 4.61 |
| 15435155 | Lamp Socket Wedge Base W3 | 6.5 |
| 15435923 | 064 Header 2R CM 24W | 4.34 |
| 15437441 | 064 Header 2R CM 24W | 4.35 |
| 15439875 | Clip | 9.14 |
| 15443822 | Connector 38F GT 150, 280 Sealed | 1.41 |
| 15445756 | Stabilizer 40M GT | 1.37 |
| 15445904 | MicroHVT Female Terminal | 4.59 |
| 15445905 | MicroHVT Female Terminal | 4.59 |
| 15449028 | Connector Assembly 2F GT 150 Sealed | 1.11 |
| 15459504 | 064 Header 2R CM 64W | 4.47 |
| 15459505 | 064 Header 2R CM 64W | 4.46 |
| 15459912 | Connector Assembly 12F GT 150 | 1.5 |
| 15459913 | Connector Assembly 12M GT 150 | 1.5 |

| Part # | Description | Page |
|---|---|---|
| 15459914 | Connector Assembly 8F GT 280 | 1.17 |
| 15459916 | Connector Assembly 8M GT 280 | 1.17 |
| 15459917 | Connector Assembly 10M GT 150 | 1.5 |
| 15459918 | Connector Assembly 10F GT 150 | 1.5 |
| 15460171 | GT 150 Female Connector Assembly Sealed USCAR | 1.6 |
| 15462823 | 064 Header 1R SM 4W | 4.9 |
| 15462824 | 064 Header 1R SM 4W | 4.9 |
| 15462825 | 064 Header 1R SM 4W | 4.9 |
| 15462826 | 064 Header 1R SM 4W | 4.9 |
| 15462827 | 064 Header 1R SM 4W | 4.9 |
| 15462828 | 064 Header 1R SM 4W | 4.9 |
| 15462829 | 064 Header 1R SM 5W | 4.11 |
| 15462830 | 064 Header 1R SM 5W | 4.11 |
| 15462831 | 064 Header 1R SM 5W | 4.11 |
| 15462832 | 064 Header 1R SM 5W | 4.11 |
| 15462833 | 064 Header 1R SM 5W | 4.11 |
| 15462834 | 064 Header 1R SM 5W | 4.11 |
| 15462835 | 064 Header 1R SM 6W | 4.13 |
| 15462836 | 064 Header 1R SM 6W | 4.13 |
| 15462837 | 064 Header 1R SM 6W | 4.13 |
| 15462838 | 064 Header 1R SM 6W | 4.13 |
| 15462839 | 064 Header 1R SM 6W | 4.13 |
| 15462840 | 064 Header 1R SM 6W | 4.13 |
| 15462841 | 064 Header 1R SM 7W | 4.15 |
| 15462842 | 064 Header 1R SM 7W | 4.15 |
| 15462843 | 064 Header 1R SM 7W | 4.15 |
| 15462844 | 064 Header 1R SM 7W | 4.15 |
| 15462845 | 064 Header 1R SM 7W | 4.15 |
| 15462846 | 064 Header 1R SM 7W | 4.15 |
| 15462847 | 064 Header 1R SM 8W | 4.17 |
| 15462848 | 064 Header 1R SM 8W | 4.17 |
| 15462849 | 064 Header 1R SM 8W | 4.17 |
| 15462850 | 064 Header 1R SM 8W | 4.17 |
| 15462851 | 064 Header 1R SM 8W | 4.17 |
| 15462852 | 064 Header 1R SM 8W | 4.17 |
| 15462854 | 064 Header 1R SM 4W | 4.8 |
| 15462855 | 064 Header 1R SM 4W | 4.8 |
| 15462856 | 064 Header 1R SM 4W | 4.8 |
| 15462857 | 064 Header 1R SM 4W | 4.8 |
| 15462858 | 064 Header 1R SM 4W | 4.8 |
| 15462859 | 064 Header 1R SM 4W | 4.8 |
| 15462860 | 064 Header 1R SM 5W | 4.10 |
| 15462861 | 064 Header 1R SM 5W | 4.10 |
| 15462862 | 064 Header 1R SM 5W | 4.10 |
| 15462863 | 064 Header 1R SM 5W | 4.10 |
| 15462864 | 064 Header 1R SM 5W | 4.10 |
| 15462865 | 064 Header 1R SM 5W | 4.10 |
| 15462866 | 064 Header 1R SM 6W | 4.12 |
| 15462867 | 064 Header 1R SM 6W | 4.12 |
| 15462868 | 064 Header 1R SM 6W | 4.12 |
| 15462869 | 064 Header 1R SM 6W | 4.12 |
| 15462870 | 064 Header 1R SM 6W | 4.12 |
| 15462871 | 064 Header 1R SM 6W | 4.12 |
| 15462872 | 064 Header 1R SM 7W | 4.14 |
| 15462873 | 064 Header 1R SM 7W | 4.14 |
| 15462874 | 064 Header 1R SM 7W | 4.14 |
| 15462875 | 064 Header 1R SM 7W | 4.14 |
| 15462876 | 064 Header 1R SM 7W | 4.14 |
| 15462877 | 064 Header 1R SM 7W | 4.14 |
| 15462878 | 064 Header 1R SM 8W | 4.16 |
| 15462879 | 064 Header 1R SM 8W | 4.16 |
| 15462880 | 064 Header 1R SM 8W | 4.16 |
| 15462881 | 064 Header 1R SM 8W | 4.16 |
| 15462882 | 064 Header 1R SM 8W | 4.16 |
| 15462883 | 064 Header 1R SM 8W | 4.16 |
| 15464948 | 064 Header 2R CM Mix Radio 30W | 4.49 |
| 15466325 | GT 150 Female Connector Assembly Sealed | 1.6 |
| 15466671 | GT 280 Female Connector Assembly Unsealed | 1.14 |
| 15470809 | Seal Cable | 9.9 |
| 15475869 | Connector 40M GT 150 | 1.37 |
| 15475870 | Connector 40M GT 150 | 1.37 |
| 15476196 | GT 280 Female Connector Assembly Sealed | 1.18 |
| 15476197 | GT 280 Female Connector Assembly Sealed | 1.18 |
| 15476198 | GT 280 Female Connector Assembly Sealed | 1.18 |
| 15476199 | GT 280 Female Connector Assembly Sealed | 1.18 |
| 15477027 | MicroHVT 2R 12F | 4.57 |
| 15477037 | MicroHVT 12F Secondary Lock | 4.57 |
| 15479020 | Connector 4F M/P 280 | 2.27 |
| 15479022 | Connector 6F M/P 280 | 2.27 |
| 15479266 | Micro64 2R 10F | 4.61 |
| 15479267 | Micro64 2R 10F | 4.61 |
| 15480081 | Micro64 2R 8F | 4.60 |
| 15480082 | Micro64 2R 8F | 4.60 |
| 15483208 | MicroHVT 2R 12F w/CPA | 4.57 |
| 15485094 | Lamp Socket Wedge Base W3 | 6.5 |
| 15487755 | Connector Assembly 4M GT 150 Sealed | 1.8 |
| 15487756 | Connector Assembly 4F GT 150 Sealed | 1.8 |
| 15488824 | Stabilizer 40M GT 150, 280 | 1.41 |
| 15489152 | GT 280 Female Connector Assembly Unsealed | 1.14 |
| 15489154 | GT 280 Female Connector Assembly Unsealed | 1.14 |
| 15489156 | GT 280 Female Connector Assembly Unsealed | 1.14 |
| 15491547 | Connector Assembly 3F GT 150 Sealed | 1.11 |
| 15492508 | Battery Bolt | 9.6 |
| 15492510 | Battery Bolt | 9.6 |
| 15492518 | Connector Assembly 42F M/P 280,480,630 | 2.84 |
| 15492519 | Connector Assembly 25M M/P 280,480,630 | 2.84 |
| 15492521 | Connector Assembly 22M W/P | 6.21 |
| 15492531 | Connector Assembly 22F W/P | 6.21 |
| 15492542 | Connector Assembly 30F M/P 150 Pull-To-Seat | 2.101 |
| 15492543 | Connector Assembly 30F M/P 150 Pull-to-Seat | 2.102 |
| 15492546 | Connector Assembly 18F M/P 150 Pull-To-Seat | 2.100 |
| 15492553 | Connector Assembly 30F M/P 150 Pull-To-Seat Sealed | 2.100 |
| 15492558 | Connector Assembly 56M M/P 280, 480, 630 | 2.85 |
| 15492562 | Connector Assembly 36M 150, 280, 480, 630 | 2.94 |
| 15492567 | Connector Assembly 30F M/P 280, 480 Sealed | 2.93 |
| 15492591 | Connector Assembly 36F M/P, 150, 280, 480, 630 | 2.94 |
| 15492601 | Connector Assembly 78F M/P 150, 280, 630 Sealed | 2.96 |
| 15492611 | Assembly Terminal M/P 800 & Bus Stud | 7.19 |
| 15492622 | Connector Assembly 116F M/P 150, 280 | 2.86 |
| 15492642 | Connector Assembly 38F M/P 280, 630 | 2.95 |
| 15492654 | Connector Mega Fuse | 7.29 |
| 15492655 | Assembly Cap 12M M/P 280 Splice Saver | 6.12 |
| 15492657 | Connector Assembly 116M M/P 150, 280 | 2.86 |
| 15492672 | Connector Assembly 56F M/P 280/480/630 | 2.85 |
| 15492996 | Seal Cable | 9.9 |
| 15495959 | Latch | 7.8 |
| 15496639 | 064 Header 2R SM 16W | 4.31 |
| 15497399 | GT 150 Female Connector Assembly | 1.6 |
| 15498985 | Connector Assembly 78M M/P 150, 280, 630 | 2.96 |
| 15499926 | MicroHVT 1R 6F | 4.52 |
| 15499927 | MicroHVT 1R 6F w/CPA | 4.52 |
| PE101003 | MicroHVT 16F Secondary Lock | 4.58 |
| PE101938 | MicroHVT 8F Secondary Lock | 4.55 |
| PE102004 | MicroHVT 1R 5F | 4.51 |
| PE102005 | MicroHVT 1R 5F | 4.51 |
| PE102006 | MicroHVT 1R 5F | 4.51 |
| PE102007 | MicroHVT 1R 5F | 4.51 |
| PE102008 | MicroHVT 1R 5F | 4.51 |
| PE102009 | MicroHVT 1R 5F | 4.51 |
| PE102012 | MicroHVT 1R 6F | 4.52 |
| PE102013 | MicroHVT 1R 6F | 4.52 |
| PE102014 | MicroHVT 1R 6F | 4.52 |
| PE102015 | MicroHVT 1R 6F | 4.52 |
| PE102016 | MicroHVT 1R 6F | 4.52 |
| PE102018 | MicroHVT 1R 7F | 4.53 |
| PE102019 | MicroHVT 1R 7F | 4.53 |
| PE102020 | MicroHVT 1R 7F | 4.53 |
| PE102021 | MicroHVT 1R 7F | 4.53 |
| PE102022 | MicroHVT 1R 7F | 4.53 |
| PE102023 | MicroHVT 1R 7F | 4.53 |
| PE102025 | MicroHVT 2R 10F | 4.56 |
| PE102026 | MicroHVT 2R 10F | 4.56 |
| PE102027 | MicroHVT 2R 10F | 4.56 |
| PE102028 | MicroHVT 2R 10F | 4.56 |
| PE102029 | MicroHVT 2R 10F | 4.56 |
| PE102030 | MicroHVT 2R 10F | 4.56 |
| PE102033 | MicroHVT 2R 12F | 4.57 |
| PE102034 | MicroHVT 2R 12F | 4.57 |
| PE102035 | MicroHVT 2R 12F | 4.57 |
| PE102036 | MicroHVT 2R 12F | 4.57 |
| PE102037 | MicroHVT 2R 12F | 4.57 |
| PE102090 | MicroHVT 5F Secondary Lock | 4.51 |
| PE102092 | MicroHVT 7F Secondary Lock | 4.53 |
| PE102094 | MicroHVT 10F Secondary Lock | 4.56 |
| PE107546 | MicroHVT 1R 4F w/CPA | 4.50 |
| PE107547 | MicroHVT 1R 4F w/CPA | 4.50 |
| PE107548 | MicroHVT 1R 4F w/CPA | 4.50 |
| PE107549 | MicroHVT 1R 4F w/CPA | 4.50 |
| PE107551 | MicroHVT 1R 5F w/CPA | 4.51 |
| PE107552 | MicroHVT 1R 5F w/CPA | 4.51 |
| PE107553 | MicroHVT 1R 5F w/CPA | 4.51 |
| PE107554 | MicroHVT 1R 5F w/CPA | 4.51 |
| PE107555 | MicroHVT 1R 5F w/CPA | 4.51 |
| PE107556 | MicroHVT 1R 5F w/CPA | 4.51 |
| PE107558 | MicroHVT 1R 6F w/CPA | 4.52 |
| PE107559 | MicroHVT 1R 6F w/CPA | 4.52 |
| PE107560 | MicroHVT 1R 6F w/CPA | 4.52 |
| PE107561 | MicroHVT 1R 6F w/CPA | 4.52 |
| PE107562 | MicroHVT 1R 6F w/CPA | 4.52 |
| PE107563 | MicroHVT 1R 7F w/CPA | 4.53 |
| PE107564 | MicroHVT 1R 7F w/CPA | 4.53 |
| PE107565 | MicroHVT 1R 7F w/CPA | 4.53 |
| PE107566 | MicroHVT 1R 7F w/CPA | 4.53 |
| PE107567 | MicroHVT 1R 7F w/CPA | 4.53 |
| PE107568 | MicroHVT 1R 7F w/CPA | 4.53 |
| PE107570 | MicroHVT 1R 8F w/CPA | 4.54 |
| PE107571 | MicroHVT 1R 8F w/CPA | 4.54 |
| PE107572 | MicroHVT 1R 8F w/CPA | 4.54 |
| PE107573 | MicroHVT 1R 8F w/CPA | 4.54 |

| Part # | Description | Page |
|---|---|---|
| PE107574 | MicroHVT 1R 8F w/CPA | 4.54 |
| PE107576 | MicroHVT 2R 8F w/CPA | 4.55 |
| PE107577 | MicroHVT 2R 8F w/CPA | 4.55 |
| PE107578 | MicroHVT 2R 8F w/CPA | 4.55 |
| PE107579 | MicroHVT 2R 8F w/CPA | 4.55 |
| PE107580 | MicroHVT 2R 8F w/CPA | 4.55 |
| PE107581 | MicroHVT 2R 8F w/CPA | 4.55 |
| PE107582 | MicroHVT 2R 10F w/CPA | 4.56 |
| PE107583 | MicroHVT 2R 10F w/CPA | 4.56 |
| PE107584 | MicroHVT 2R 10F w/CPA | 4.56 |
| PE107585 | MicroHVT 2R 10F w/CPA | 4.56 |
| PE107586 | MicroHVT 2R 10F w/CPA | 4.56 |
| PE107587 | MicroHVT 2R 10F w/CPA | 4.56 |
| PE107589 | MicroHVT 2R 12F w/CPA | 4.57 |
| PE107590 | MicroHVT 2R 12F w/CPA | 4.57 |
| PE107591 | MicroHVT 2R 12F w/CPA | 4.57 |
| PE107592 | MicroHVT 2R 12F w/CPA | 4.57 |
| PE107593 | MicroHVT 2R 12F w/CPA | 4.57 |
| PE107600 | MicroHVT 2R 16F w/CPA | 4.58 |
| PE107601 | MicroHVT 2R 16F w/CPA | 4.58 |
| PE107602 | MicroHVT 2R 16F w/CPA | 4.58 |
| PE107603 | MicroHVT 2R 16F w/CPA | 4.58 |
| PE107604 | MicroHVT 2R 16F w/CPA | 4.58 |
| PE107605 | MicroHVT 2R 16F w/CPA | 4.58 |
| PE107849 | MicroHVT 1R 4F | 4.50 |
| PE107850 | MicroHVT 1R 4F | 4.50 |
| PE107851 | MicroHVT 1R 4F | 4.50 |
| PE107852 | MicroHVT 1R 4F | 4.50 |
| PE107855 | MicroHVT 1R 8F | 4.54 |
| PE107856 | MicroHVT 1R 8F | 4.54 |
| PE107857 | MicroHVT 1R 8F | 4.54 |
| PE107858 | MicroHVT 1R 8F | 4.54 |
| PE107859 | MicroHVT 1R 8F | 4.54 |
| PE107861 | MicroHVT 2R 8F | 4.55 |
| PE107862 | MicroHVT 2R 8F | 4.55 |
| PE107863 | MicroHVT 2R 8F | 4.55 |
| PE107864 | MicroHVT 2R 8F | 4.55 |
| PE107866 | MicroHVT 2R 8F | 4.55 |
| PE107867 | MicroHVT 2R 8F | 4.55 |
| PE107868 | MicroHVT 2R 16F | 4.58 |
| PE107869 | MicroHVT 2R 16F | 4.58 |
| PE107870 | MicroHVT 2R 16F | 4.58 |
| PE107871 | MicroHVT 2R 16F | 4.58 |
| PE107872 | MicroHVT 2R 16F | 4.58 |
| PE107873 | MicroHVT 2R 16F | 4.58 |
| PE108483 | 064 Header 2R CM Mix Radio 46W | 4.49 |
| PE114929 | 064 Header 2R CM Mix Amplified 40W | 4.48 |
| PE116301 | 064 Header 1R CM 24W | 4.20 |
| PE116303 | 064 Header 1R CM 24W | 4.21 |
| PE119310 | 064 Header 1R CM 16W | 4.19 |
| PE119312 | 064 Header 1R CM 16W | 4.18 |
| PE119314 | 064 Header 1R CM 32W | 4.23 |
| PE119316 | 064 Header 1R CM 32W | 4.22 |
| PE132123 | 064 Header 1R SM 12W | 4.16 |

DELPHI

Driving Tomorrow's Technology

**World Headquarters and Customer Center**
Mail Code 483.400.306
5725 Delphi Drive
Troy, Michigan 48098-2815
U.S.A.
Tel: [1] 248.813.2334
Fax: [1] 248.813.2333

**Asia Pacific Regional Headquarters**
No. 60, Yuan Guo Road
Anting, Jia Ding District
Shanghai, 201814
Peoples Republic of China
Tel: [86] 21.5956.3300
Fax: [86] 21.6957.3797

**European Regional Headquarters**
Customer Technology Center
Vorm Eichholz 1
42119 Wuppertal
Germany
Tel: [49] 202.291.0
Fax: [49] 202.291.2777

**South American Regional Headquarters**
Rodovia dos Tamoios, Km 21,8
Jambeiro – SP 12270-000
Brazil
Tel: [55] 12.3978.2020
Fax: [55] 12.3978.2077

**delphi**.com

Printed on Recycled Paper
©2006 Delphi. All rights reserved.
DP-06-E-165 1006/GrxROB/10m

About Delphi. Multi-national Delphi conducts its business operations through various subsidiaries and has headquarters in Troy, Michigan, USA, Paris, Tokyo and São Paulo, Brazil.

Общество с ограниченной ответственностью «МосЧип» ИНН 7719860671 / КПП 771901001
Адрес: 105318, г.Москва, ул.Щербаковская д.3, офис 1107

**Данный компонент на территории Российской Федерации**

**Вы можете приобрести в компании MosChip.**

Для оперативного оформления запроса Вам необходимо перейти по данной ссылке:

http://moschip.ru/get-element

Вы можете разместить у нас заказ для любого Вашего проекта, будь то серийное производство или разработка единичного прибора.

В нашем ассортименте представлены ведущие мировые производители активных и пассивных электронных компонентов.

Нашей специализацией является поставка электронной компонентной базы двойного назначения, продукции таких производителей как XILINX, Intel (ex.ALTERA), Vicor, Microchip, Texas Instruments, Analog Devices, Mini-Circuits, Amphenol, Glenair.

Сотрудничество с глобальными дистрибьюторами электронных компонентов, предоставляет возможность заказывать и получать с международных складов практически любой перечень компонентов в оптимальные для Вас сроки.

На всех этапах разработки и производства наши партнеры могут получить квалифицированную поддержку опытных инженеров.

Система менеджмента качества компании отвечает требованиям в соответствии с ГОСТ Р ИСО 9001, ГОСТ РВ 0015-002 и ЭС РД 009

**Офис по работе с юридическими лицами:**

105318, г.Москва, ул.Щербаковская д.3, офис 1107, 1118, ДЦ «Щербаковский»

Телефон: +7 495 668-12-70 (многоканальный)

Факс: +7 495 668-12-70 (доб.304)

E-mail: info@moschip.ru

Skype отдела продаж:
moschip.ru
moschip.ru_4
moschip.ru_6
moschip.ru_9