Littelfuse®

Expertise Applied | Answers Delivered

AUTOMOTIVE AFTERMARKET CIRCUIT PROTECTION CATALOG

AFTERMARKET

Genuine OEM Circuit Protection Products

Circuit Protection Today

An overview of today's fuse market . . .

- New vehicles contain 90 to 150 fuses throughout the vehicle in 3 to 4 different fuse blocks. For example, the BMW 750il uses 148 fuses.
- High amperage products — MAXI, MEGA, MIDI, PAL and JCASE fuses — make up 1 out of every 5 fuses in new vehicles.
- The past decade has produced more automotive circuit protection devices than the entire history of the industry.
- Fuse and circuit breaker applications have grown by 400% in the past 10 years.
- Glass fuses have not been used as a primary original equipment circuit protection device since 1981. Unit movement has been steadily declining, although glass fuses are used in many accessory applications.

Littelfuse partners with every major automotive and heavy-duty OEM. That is why more than 95% of domestic and 70% of foreign new vehicles contain Littelfuse fuses. (Your Customers and Installers will have a Littelfuse fuse in their hand when they need a source to replace a fuse.) Littelfuse has introduced every new fuse in the industry for the past three decades, starting with the ATO blade fuse. Littelfuse holds more than 130 patents on circuit protection devices, more than all the other fuse manufacturers in the world combined. Other fuse manufacturers are licensed by Littelfuse to utilize its product designs and trademarks.

What is Driving the Circuit Protection Market?

The Circuit Protection market is experiencing accelerated growth caused by a combination of powerful forces driving the market. There has never been a better time to invest in the distribution of the Circuit Protection category.

- **One Wire — One Fuse Protection Trend:** Auto manufacturers are moving towards protecting every wire in the vehicle.
- **More Power Consumption:** Vehicles are consuming power at higher amperages than ever before, and manufacturers are now protecting high amp applications, such as the alternator, with MEGA, MIDI, PAL, JCASE and MAXI fuses.
- **Space & Weight Efficiency:** As vehicle designs get more complex, fuses must get smaller so more fuses can fit in the same amount of space.
- **Greater Diversity of Fuses:** Vehicles contain more fuses than ever before, so Aftermarket Customers and Installers are requiring a greater variety of circuit protection devices in their displays, assortments and merchandisers.
- **More On-Board Electronics:** Auto manufacturers and Aftermarket suppliers are offering a broader range of on-board components like cellular phones, CD players, Bluetooth, navigation, alarm systems and remote starters which require circuit protection for installation and replacement.
- **New Market Niches:** The increased demand in circuit protection is offering current channels of distribution new marketing opportunities in the Fast Lube, Warehouse Club and Electrical Accessories Installer channels or any outlet stocking electrical replacement parts.
- **Longer Vehicle Life:** The life expectancy of cars is increasing to 20+ years. This results in more miles driven and wiring that is aging, leading to more blown fuses that need to be replaced.
- **Easier Access to Fuse Blocks:** Auto manufacturers have moved fuse blocks into the passenger compartments, e.g. glove box, dashboard and trunk, making it easier for DIY replacement. Fuseblocks are also better marked for easier identification of the proper circuit.
- **Infotainment**: The increasing use of video and other new electronics in vehicles have challenged designers to protect even more sensitive automotive electronics. New technologies in circuit protection and fuse box design eliminate transient surges that can damage vehicle equipment.

The Future of Circuit Protection

Littelfuse's new product development process is based on practical innovations designed around the needs of the customer. The circuit protection products of the future will offer greater features to protect increasingly complex electrical systems, meet the booming demand for on-board electronics and make the Circuit Protection category a continuously stronger part of the Automotive Aftermarket.

Here is a glimpse of Littelfuse's vision of circuit protection for tomorrow . . .

- Fuse count per vehicle to grow each year.
- Increased need for higher amp protection with JCASE and bolt-on devices like MEGA and MIDI fuses.
- Greater need for a broader range of fuse blocks and fuseholders, testers and pullers, fuse kits and assortments and creative merchandising systems.
- Greater need for more technical training materials, point of sale education support and more reliable application data.
- More compact fuses such as MINI, Micro and electronic surface mount fuses.
- Smart circuit protection — the vehicle will tell you what fuse needs to be replaced and its location.
- Special circuit protection products designed for electric and alternative fuel vehicles.
- Modular electrical systems that require modular fuseblocks in locations throughout the vehicle like the quarter panels, fender wells, door panels, etc.

 ©2015 Littelfuse Automotive Aftermarket Circuit Protection

Littelfuse 85 YEARS OF EXPERTISE

A History of Littelfuse Automotive Firsts

For more than 75 years, Littelfuse has been the Circuit Protection manufacturer to achieve the automotive industry's most significant accomplishments, beginning in 1927 by inventing electronic circuit protection technology with the first small fast-acting protective fuse.

1930 – Automotive fuse introduced by Littelfuse.

1950 – Littelfuse develops design of industry's first centralized under dash fuseblock.

1976 – ATO® blade fuse revolutionizes automotive circuit protection.

1978 – Introduced Value Pak Emergency Fuse Kits offering 8–10 fuses with fuse puller.

1983 – Littelfuse begins battle with fuse counterfeiters and helps establish a Federal exclusion order prohibiting the importation of look-alike fuses into the United States.

1986 – U.S. Auto Industry selects the MAXI fuse to replace the commonly used high amp fusible wire and fusible links in under-the-hood electrical harnesses.

1987 – Littelfuse expands high amp coverage with reliable new line of PAL Auto Links for complete Japanese coverage.

1988 – Littelfuse develops the ATO® style diode assembly to control surge voltages caused by electromagnetic components.

1991 – High amp protection MEGA® fuse introduced as the first OEM and Aftermarket fuse rated up to 250 amps.

1993 – The MINI® diode is introduced to perform omni-directional blocking of current flow in automotive applications.

1993 – The ATO® resistor assembly is released to adjust and suppress excess voltage in sensitive automotive circuits.

1993 – Littelfuse becomes the first circuit protection manufacturer to receive ISO 9000 certification.

1994 – Littelfuse partners with Chrysler and BMW to design and patent the MIDI® fuse for specific applications.

1994 – MIDI® compact bolt-down automotive fuse introduced for European high amp applications.

1995 – The MINI® resistor joins the Littelfuse line of Automotive products.

1995 – Littelfuse introduced Circuit Alert – a blown fuse indicating device for ATO® fuses.

1995 – Add-A-Circuit fuseholder introduced as new way to add an additional circuit without cutting or splicing.

1996 – Littelfuse became first circuit protection manufacturer to receive QS 9000 certification.

1997 – JCASE introduced as compact version of MAXI Fuse for domestic autos beginning in 1998.

1997 – Littelfuse celebrates 70 years of quality circuit protection innovation.

1999 – Littelfuse acquires Harris Suppression and its overvoltage technology to compliment it's overcurrent product lines.

2001 – The patented CablePro® is introduced to replace fuse links in high-current, battery direct applications such as starters or alternators.

2002 – Littelfuse acquires Semitron Industries, LTD and becomes the only company in the world that can supply all the major circuit protection technologies.

2004 – Purchases majority ownership of Heinrich Industries AG, including WICKMANN, Pudenz and Efen, to expand European market for automotive and electronic circuit protection

2006 – Acquires SMARTGLOW® fuse, the first indicated automotive blade type fuse.

2010 – Opens the High Power Lab, located in Champaign, Illinois, providing customers with product design and specialized testing services.

2010 – Acquires the Cole Hersee Company, a supplier of switches and control devices to the commercial vehicle market.

2012 – Acquires ACCEL AB, located in Vänersborg, Sweden, a leading supplier and manufacturer of advanced electromechanical products and components, primarily for the automotive industry.

2012 – Acquires Terra Power Systems, LLC, a Bellingham, WA – based manufacturer of electrical distribution products for heavy-duty vehicle applications.

©2015 Littelfuse Automotive Aftermarket Circuit Protection

THE INDUSTRY LEADER IN CIRCUIT PROTECTION SINCE 1927

Littelfuse®
Expertise Applied | Answers Delivered

TABLE OF CONTENTS

FUSEOLOGY 4-5

1 ATO® FUSES 6

Developed by Littelfuse for the automotive industry, the ATO® fuse has become the original equipment circuit protection standard for foreign and domestic automobiles and trucks.

2 MINI® FUSES 8

Its miniature design meets the need for more circuits to be protected while utilizing less space, and its ability to cope with high temperatures in adverse environments makes the MINI® Fuse the recommended choice for protection.

3 LOW PROFILE MINI® FUSES 10

The Low Profile MINI® fuse has similar performance characteristics as the standard MINI® fuse.

4 MICRO2™ / MICRO3™ FUSES 12

Its sub-miniature design meets the need for more circuits to be protected while utilizing less space and its ability to cope with high temperatures in adverse environments makes the MICRO2™ and MICRO3™ Fuse the recommended choice for protection.

5 MAXI FUSES 14

The MAXI fuse uses "Diffusion Pill Technology" to provide predictable time delay characteristic and low heat dissipation.

6 JCASE® FUSES 14

The JCASE® is a cartridge style fuse with female terminal design. JCASE® provides both increased time delay and low voltage drop to protect high current circuits. JCASE® has the ability to handle inrush currents. The JCASE® was designed and patented by Littelfuse.

7 LOW PROFILE JCASE® FUSES 16

The Low Profile JCASE® fuse has similar performance characteristics as the standard JCASE® fuse. The lower overall height reduction allows for more space and weight savings and also allows for a shorter male blade terminal, saving additional weight and material savings in fuse box designs.

©2015 Littelfuse Automotive Aftermarket Circuit Protection

8 MCASE™ FUSES 17

It has a miniaturized footprint for optimal usage of space. It is a time delayed fuse and can handle inrush currents. MCASE™ is designed and patented by Littelfuse.

9 PAL AUTOLINK FUSES 20

Commonly found on many Japanese and Domestic built vehicles in current ratings up to 140 amperes. Available with female connector, male connector, bent connector and locking female connector. Color coded to indicate amp rating.

10 GLASS FUSES 21

AG and SFE fuses were designed into North American vehicles prior to 1981. Glass fuses are also used for auto accessory applications.

11 CIRCUIT BREAKERS 24

Type I – Automatic Reset
Cycles or continuously resets until the fault is corrected. Type I circuit breakers are typically used to protect circuits which occasionally experience momentary overloads such as wiper motor and headlamp circuits where a self resetting device is preferred.

Type II – Modified Reset
Non-cycling, remains in open position while there is power to the circuit. Resets when ignition is turned off. Type II circuit breakers are typically used in applications where fuse replacement is objectionable, such as power window, seat and sunroof circuits.

Type III – Manual Reset
Manually resettable circuit breakers remain in the open position until a button, lever or other external reset device is manually depressed. Type III circuit breakers are typically used in applications where a manual reset is desired for safe diagnosis of a circuit fault.

12 MEGA® BOLT ON FUSES 28

The MEGA® Fuse is designed for high current circuit protection up to 500A with "Diffusion Pill Technology." The MEGA® Fuse also provides time delay characteristics. Designed and patented by Littelfuse, the MEGA® Fuse is ideal for battery and alternator protection application and other heavy gauge cables requiring ultra-high current protection.

13 MIDI® BOLT ON FUSES 29

This MIDI® style fuse offers a bolt-on space saving fuse for high current wiring protection and provides time delay characteristics with "Diffusion Pill Technology". The MIDI® was designed and patented by Littelfuse.

14 ZCASE FUSE 29

15 FUSE BLOCKS 30

16 POWER FEED 31

17 FUSE HOLDERS 32

18 SWITCHES 34

19 PULLERS / TESTERS 35

20 CNL/CNN FUSES 35
FUSIBLE LINKS 35

21 RETAIL
COMMERCIAL ASSORTMENT PACKS 36
CADDYS 37
RED BOX 38
SUPER VALUE PACKS 39
FUSE ASSORTMENTS 39
MODULAR RACK SYSTEMS 40
EMERGENCY KITS 41
PLANOGRAM 42

REFERENCE
PACKAGING / PART NUMBERING 43
SYSTEM AND MARKETING NUMBERS 44
FUSE SELECTION CHART 45
CROSS REFERNCE GUIDE 47

FUSEOLOGY

Understanding how circuit protection works is a key to diagnosing automotive electrical problems. When a fuse blows, that means the fuse is doing its job — sending you a message that something needs to be fixed.

WHAT IS THE PURPOSE OF A FUSE?

A fuse is a safety valve. It is designed to stop current from exceeding the rating of the wires or components. Without fuses, excessive current could cause damage to electrical systems, and even result in fires.

In general, a fuse has a simple construction. The key component is the "element" — a short piece of metal wire or strap.

WHAT CAUSES A FUSE TO BLOW?

The element is designed to melt at a specific temperature, to protect wires and equipment from overcurrents. An overcurrent is any current that exceeds the amperage rating or wiring capacity of equipment or devices under normal conditions of use.

If an overcurrent causes the current in a circuit to rise above a specific level — often the circuit's rating — the heat produced will melt the fuse's element, causing the fuse to "blow." This opens the circuit and immediately stops the flow of current. Fuses are designed to blow at temperatures far below those that would cause damage or hazards.

Once a fuse is blown, it can be replaced to allow the current to flow again. But **simply replacing a fuse may not be the solution to the problem.** In fact, there is a chance the fuse will just blow again, because the fuse is signaling a problem in the system. Understanding the factors that cause a fuse to blow will help you diagnose automotive electrical problems.

There are two types of overcurrents that can cause a fuse to blow: overloads and short circuits.

Overload

What: The current exceeds the amperage at which the wires or equipment are rated.

Why: Too many devices are connected to one circuit, or a device malfunctions and draws higher than its normal operating current. Sustained overloads cause overheating of circuit components and the fuse blows.

Short Circuit

What: The current is out of its normal path.

Why: A malfunction creates an unintended path for electricity to flow from the battery or alternator to ground. This can be caused by the touching of any positive wire to a ground wire, e.g. due to frayed wire insulation, or tools laid across the positive and ground wires of a circuit. The uncontrolled current to ground then surpasses the normal resistance of the wire contained in the circuit, forcing higher and higher current to the point of the generating heat which blows the fuse.

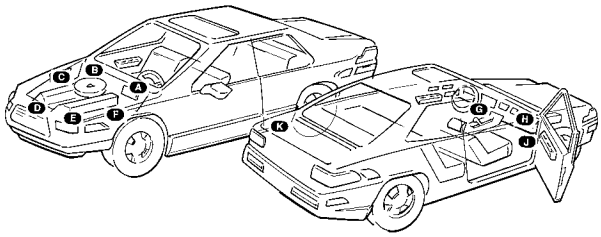

Bold letter after fuse part number indicates fuse block location.

A	Left fire wall	**G**	Behind/under dash left
B	Right fire wall	**H**	Behind/in glove box
C	Right fender	**J**	Behind/under dash right
D	Right front	**K**	Rear compartment
E	Left front	**IL**	In-line with device protected
F	Left fender		(locations may vary from car to car, see your dealer.)

FINDING A FUSE

To be able to address fuse issues, you first must be able to locate the appropriate fuse within the vehicle. In today's vehicles, each individual wire is protected by a circuit protection device.

Fuses are contained in fuse blocks located at various points throughout the vehicle. The diagram above illustrates typical fuse block locations. For further help finding a fuse, use the *Littelfuse Automotive Fuse Guide*, which lists a letter corresponding to the fuse location for every fuse application listed.

SELECTING THE RIGHT FUSE

Once you have found the fuse that has blown, and solved the problem in the vehicle, you must replace the blown fuse with an appropriate device.

When selecting the right fuse for replacement, you should consider the following:

Physical Type

The replacement fuse must be of the same physical type as the blown fuse being replaced. It must be of the same style and have the same dimensions so that it can fit properly in the fuse block or fuseholder. Check your owner's manual to determine the appropriate fuse type.

Installation Tip: Littelfuse holds patents for the designs on most automotive fuses. It is important to remember that the physical type of the fuse is important, but it is not the only factor affecting the fuse's function. Although some fuses appear to be the same type and dimension as Littelfuse fuses, they do not necessarily have the same performance characteristics.

Look for the Littelfuse OEM Label

To guarantee the same level of quality in circuit protection that the major automotive manufacturers of North America require for their original equipment fuses, look for the OEM seal on Littelfuse aftermarket products. Only Littelfuse products can guarantee this level of quality.

ORIGINAL EQUIPMENT MANUFACTURER

©2015 Littelfuse Automotive Aftermarket Circuit Protection

Beware of Counterfeit Fuses

At first glance, it's hard to tell the difference between a genuine Littelfuse blade fuse and a counterfeit. The counterfeit may have the same physical dimensions, but using it can be dangerous because it fails to perform to the stringent performance and safety specifications developed by Littelfuse and the OEMs.

In many cases, the elements in counterfeit fuses do not correspond with the amperage specification stamped on the fuse. This will prevent the elements from opening at the rated or correct amperage, which could result in an auto fire causing serious damage to the vehicle, its contents and its passengers.

Responding to this growing problem, the United States International Trade Commission and then President Ronald Reagan issued and approved an exclusion order in 1983 prohibiting the importation of the look-alike blade fuses into the United States. This order was initiated because many of these fuses were proven to be totally unsafe. The photos shown here indicate why counterfeit fuses are potentially unsafe and present a fire risk.

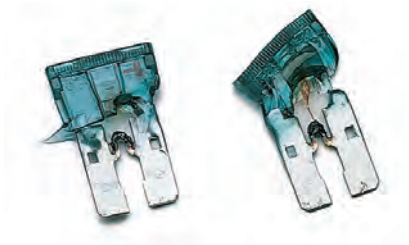

To guarantee quality and safety, look for the Littelfuse name on fuses and fuse packaging.

Current Rating — Amperage

The current rating, marked on every fuse, is the maximum current in amperes that the fuse can continuously carry under specified conditions.

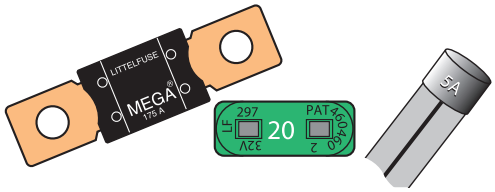

Tip: When selecting a fuse, make sure the current rating of the fuse is the same amperage as the circuit. You can obtain the current rating of a circuit by looking in the owner's manual of the vehicle; checking to see if it is written on the fuse block; or consulting the Littelfuse Fuse Guide.

Overfusing and Underfusing

Overfusing is when the fuse has a current rating higher than the rating of the circuit. In this case, the fuse will not be able to protect the circuit properly because the circuit could reach overcurrent levels, causing damage and safety hazards, before the fuse would blow.

Underfusing is when the fuse is rated at a current too far below the rating of the circuit. In this case the fuse will blow, even though the circuit is functioning normally without an overcurrent. Underfusing almost guarantees that a fuse will blow repeatedly. This is referred to as a nuisance blow.

Voltage Rating

The voltage rating, marked on every fuse, indicates the maximum voltage at which the fuse is designed to operate safely if an overcurrent occurs.

Tip: The fuse voltage rating must equal to or exceed this circuit voltage where the fuse is installed. This is not a problem in fuse selection because automotive fuse applications are typically around 12 volts, while the voltage rating of the majority of Littelfuse automotive fuses — including ATO Fuse, MINI Fuse, MAXI Fuse and MEGA Fuse — is 32 volts.

ADDING A CIRCUIT

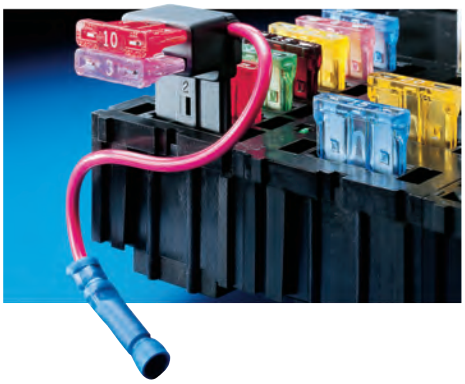

Always use a circuit protection device with a fuseholder or fuse block whenever adding additional circuits to ensure optimal safety. The fastest, easiest option for installers who need to add a circuit for applications such as electronic components, is Littelfuse's Add-A-Circuit Fuseholder. Add-A-Circuit, available in ATO® and MINI® blade fuse versions, is designed to facilitate installation of fuses for accessories of 10 amps or less. The Add-A-Circuit adapts the fuse block to the installer's needs, quickly turning one slot in the fuse block into two, providing a safe, economical alternative to splicing or fusetaps.

Caution: Fusetaps are not a recommended alternative for adding circuits because they can overstress the terminals in the fuse block. This situation can create a loose fitting fuse, which in turn produces excessive heat, which can cause nuisance blows, even melting of the fuse and fuse block and possibly an expensive repair in the future. When a fusetap is used, in many cases there is no fuse protecting the new circuit, a condition which can also present a hazard.

Another alternative to adding a circuit is the Littelfuse Battery Power Feed. This device attaches directly to the battery terminal, allowing the addition of up to three circuits. Then use an in-line fuseholder to protect the circuit properly.

ATO® (Autofuse®) Blade Fuse

Developed by Littelfuse for the automotive industry, the ATO® fuse has become the original equipment circuit protection standard for foreign and domestic automobiles and trucks. Readily identifiable and easily replaced, this fuse can be specified for a variety of low voltage electronic applications.

ATO® (Autofuse®) Blade Fuse

It is currently found on most cars, trucks, buses and off the road vehicles worldwide. Features Littelfuse designed industry standard color coding to indicate amp rating.

Voltage Rating Characteristics:
32V AC/DC Fast-Acting
Approvals: UL listed, CSA certified 3-30A, SAE J1284.

ATO® Smart Glow Blade Fuse

Smart Glow fuses are innovative automotive style fuses that feature an indicator light that glows when the fuse is blown, saving time to troubleshoot an open circuit.

Voltage Rating Characteristics: 14 VDC
Voltage Rating: 12 VDC
Operating Temperature Range: -40˚C to +105˚C
Terminals: Tin plated Zinc alloy

ATO® FUSE TABLE

PRO•TEK Professional Pak (Plus Pack)

COLOR CODE	CURRENT RATING (A)	BOXED		CARDED			CARDED		CARDED		
		MATERIAL #	CATALOG #	MATERIAL #	CATALOG #	NEW PACKAGING MATERIAL #	MATERIAL #	NEW PACKAGING MATERIAL #	MATERIAL #	CATALOG #	NEW PACKAGING MATERIAL #
Black	1A	0ATO001.V	ATO1	0ATO001.VP	ATO1BP	0ATO001.VPA	0ATO001.ZXPRO	0ATO001.ZXPROA	---	---	---
Gray	2A	0ATO002.V	ATO2	0ATO002.VP	ATO2BP	0ATO002.VPA	0ATO002.ZXPRO	0ATO002.ZXPROA	---	---	---
Violet	3A	0ATO003.V	ATO3	0ATO003.VP	ATO3BP	0ATO003.VPA	0ATO003.ZXPRO	0ATO003.ZXPROA	0ATO003.VPGLO	10-0003	0ATO003.VPGLOA
Pink	4A	0ATO004.V	ATO4	0ATO004.VP	ATO4BP	0ATO004.VPA	0ATO004.ZXPRO	0ATO004.ZXPROA	---	---	---
Tan	5A	0ATO005.V	ATO5	0ATO005.VP	ATO5BP	0ATO005.VPA	0ATO005.ZXPRO	0ATO005.ZXPROA	0ATO005.VPGLO	10-1000	0ATO005.VPGLOA
Brown	7.5A	0ATO07.5V	ATO7.5	0ATO07.5VP	ATO7.5BP	0ATO07.5VPA	0ATO07.5ZXPRO	0ATO07.5ZXPROA	0ATO07.5VPGLO	10-0007	0ATO07.5VPGLOA
Red	10A	0ATO010.V	ATO10	0ATO010.VP	ATO10BP	0ATO010.VPA	0ATO010.ZXPRO	0ATO010.ZXPROA	0ATO010.VPGLO	10-1001	0ATO010.VPGLOA
Blue	15A	0ATO015.V	ATO15	0ATO015.VP	ATO15BP	0ATO015.VPA	0ATO015.ZXPRO	0ATO015.ZXPROA	0ATO015.VPGLO	10-1002	0ATO015.VPGLOA
Yellow	20A	0ATO020.V	ATO20	0ATO020.VP	ATO20BP	0ATO020.VPA	0ATO020.ZXPRO	0ATO020.ZXPROA	0ATO020.VPGLO	10-1003	0ATO020.VPGLOA
Clear	25A	0ATO025.V	ATO25	0ATO025.VP	ATO25BP	0ATO025.VPA	0ATO025.ZXPRO	0ATO025.ZXPROA	0ATO025.VPGLO	10-1004	0ATO025.VPGLOA
Green	30A	0ATO030.V	ATO30	0ATO030.VP	ATO30BP	0ATO030.VPA	0ATO030.ZXPRO	0ATO030.ZXPROA	0ATO030.VPGLO	10-1005	0ATO030.VPGLOA
Orange	40A	0ATO040.V	ATO40	0ATO040.VP	ATO40BP	0ATO040.VPA	---	---	---	---	---

©2015 Littelfuse Automotive Aftermarket Circuit Protection

DIMENSIONS ATO®

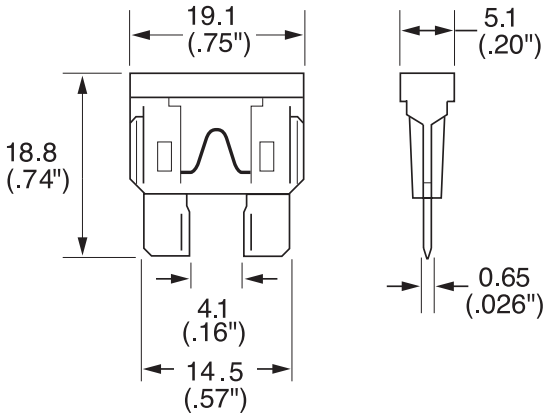

DIMENSIONS SMART GLOW ATO®

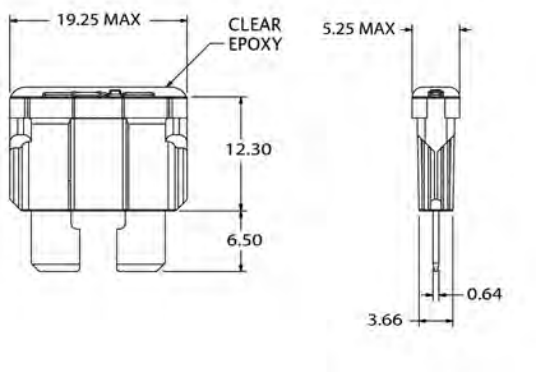

TEMPERATURE RERATING CURVE

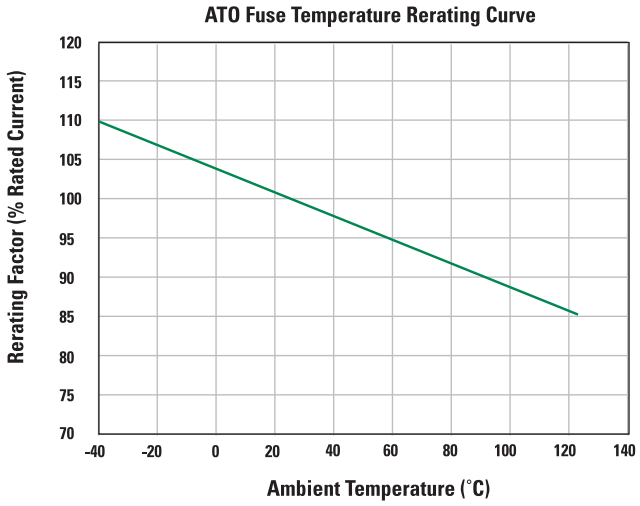

TIME-CURRENT CHARACTERISTIC CURVES

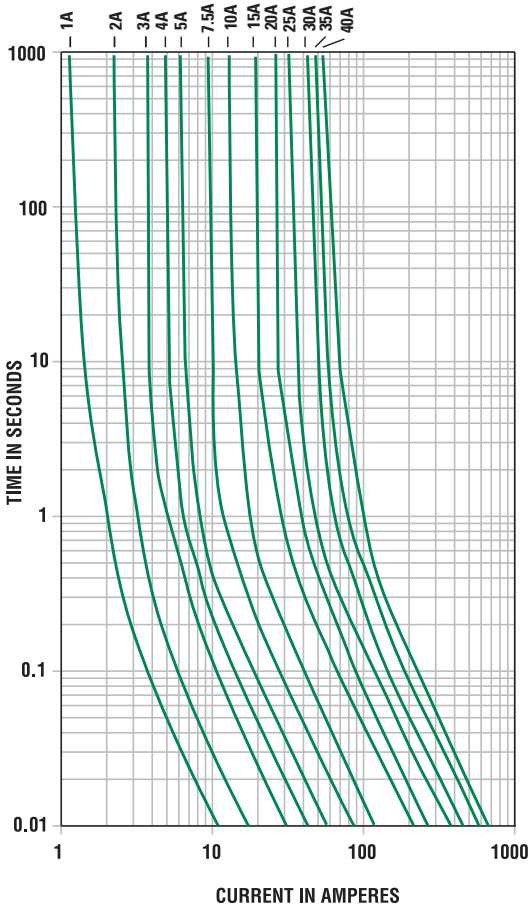

TIME-CURRENT CHARACTERISTICS

% of Rating	Opening Time	Opening Time Min / Max (s)
100	35-40	360,000 s / –
110	1-30	360,000 s / –
135	1-2 3-40	350ms /600 s 0.750 s / 600 s
200	1-2 3-40	100 ms/5.0 s 0.150 s / 5.0 s
350	1-2 3-40	20 ms / 500 ms 80 ms / 500 ms
600	1-30 35-40	–/ 100 ms –/ 150 ms

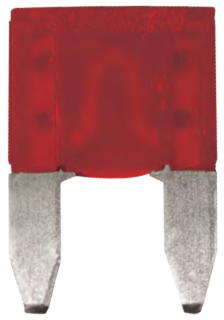

MINI® Blade Fuse

The MINI® Fuse is quickly becoming the new standard for vehicle circuit protection. Its miniature design meets the need for more circuits to be protected while utilizing less space, and its ability to cope with high temperatures in adverse environments makes the MINI® Fuse the recommended choice for protection.

MINI® Blade Fuse

The MINI® Fuse is quickly becoming the new standard for vehicle circuit protection. Its miniature design meets the need for more circuits to be protected while utilizing less space, and its ability to cope with high temperatures in adverse environments makes the MINI® Fuse the recommended choice for protection.

Voltage Rating Characteristics: 32V AC/DC Fast-Acting
Approvals: UL listed, SAE J2077.

SMARTe® GLOW Fuse®

MINI® Smart Glow Blade Fuse

Smart Glow fuses are innovative automotive style fuses that feature an indicator light that glows when the fuse is blown, saving time to troubleshoot an open circuit.

Interrupting Rating: 1000A @ 14 VDC
Voltage Rating: 12 VDC
Operating Temperature Range: -40˚C to +125˚C
Terminals: Silver plated Zinc alloy

MINI® FUSE TABLE

PRO•TEK Professional Pak (Plus Pack)

SMARTe® GLOW Fuse®

COLOR CODE	CURRENT RATING (A)	BOXED		CARDED			CARDED		CARDED		
		MATERIAL #	CATALOG #	MATERIAL #	CATALOG #	NEW PACKAGING MATERIAL #	MATERIAL #	NEW PACKAGING MATERIAL #	MATERIAL #	CATALOG #	NEW PACKAGING MATERIAL #
Gray	2A	0MIN002.V	MIN2	0MIN002.VP	MIN2BP	0MIN002.VPA	0MIN002.ZXPRO	0MIN002.ZXPROA	---	---	---
Violet	3A	0MIN003.V	MIN3	0MIN003.VP	MIN3BP	0MIN003.VPA	0MIN003.ZXPRO	0MIN003.ZXPROA	0MIN003.VPGLO	11-0003	0MIN003.VPGLOA
Pink	4A	0MIN004.V	MIN4	0MIN004.VP	MIN4BP	0MIN004.VPA	0MIN004.ZXPRO	0MIN004.ZXPROA	---	---	---
Tan	5A	0MIN005.V	MIN5	0MIN005.VP	MIN5BP	0MIN005.VPA	0MIN005.ZXPRO	0MIN005.ZXPROA	0MIN005.VPGLO	11-1000	0MIN005.VPGLOA
Brown	7.5A	0MIN07.5V	MIN7.5	0MIN07.5VP	MIN7.5BP	0MIN07.5VPA	0MIN07.5ZXPRO	0MIN07.5ZXPROA	0MIN07.5VPGLO	11-0007	0MIN07.5VPGLOA
Red	10A	0MIN010.V	MIN10	0MIN010.VP	MIN10BP	0MIN010.VPA	0MIN010.ZXPRO	0MIN010.ZXPROA	0MIN010.VPGLO	11-1001	0MIN010.VPGLOA
Blue	15A	0MIN015.V	MIN15	0MIN015.VP	MIN15BP	0MIN015.VPA	0MIN015.ZXPRO	0MIN015.ZXPROA	0MIN015.VPGLO	11-1002	0MIN015.VPGLOA
Yellow	20A	0MIN020.V	MIN20	0MIN020.VP	MIN20BP	0MIN020.VPA	0MIN020.ZXPRO	0MIN020.ZXPROA	0MIN020.VPGLO	11-1003	0MIN020.VPGLOA
Clear	25A	0MIN025.V	MIN25	0MIN025.VP	MIN25BP	0MIN025.VPA	0MIN025.ZXPRO	0MIN025.ZXPROA	0MIN025.VPGLO	11-1004	0MIN025.VPGLOA
Green	30A	0MIN030.V	MIN30	0MIN030.VP	MIN30BP	0MIN030.VPA	0MIN030.ZXPRO	0MIN030.ZXPROA	0MIN030.VPGLO	11-1005	0MIN030.VPGLOA
Black Diode	1A	---	---	---	---	2400113XPA	---	---	---	---	---

©2015 Littelfuse Automotive Aftermarket Circuit Protection

DIMENSIONS MINI®

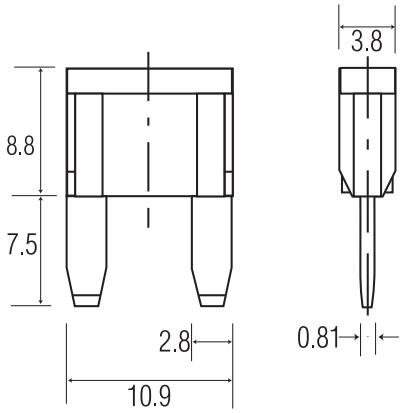

DIMENSIONS SMART GLOW MINI®

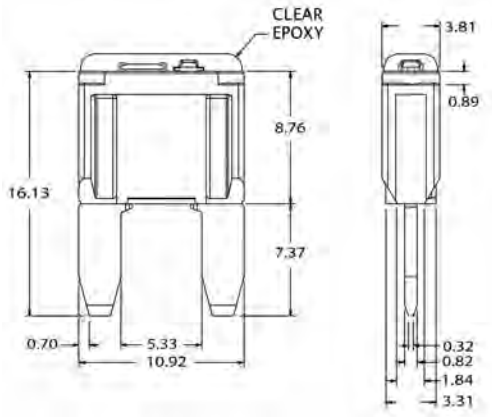

TIME-CURRENT CHARACTERISTIC CURVES

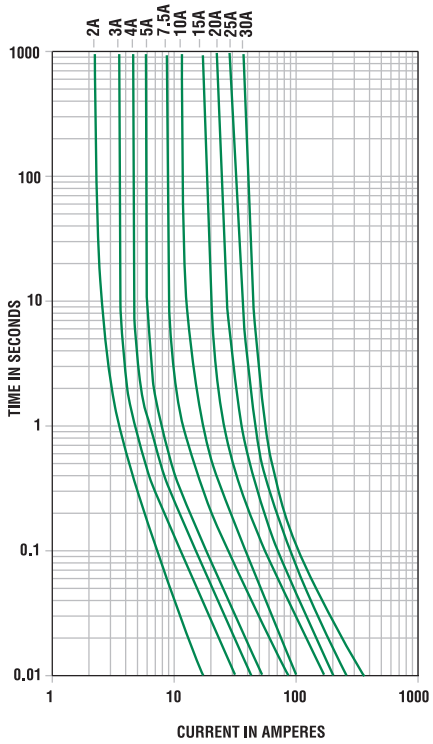

TEMPERATURE RERATING CURVE

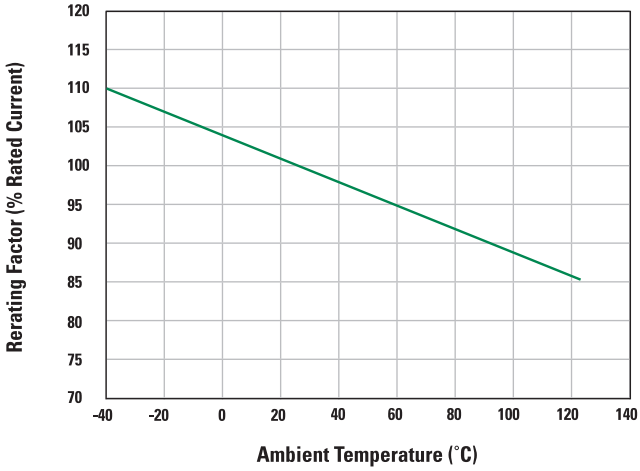

TIME-CURRENT CHARACTERISTICS

% of Rating	Opening Time Min / Max (s)
110	360,000 s / –
135	0.75 s / 600 s
200	0.15 s / 5 s
350	0.080 s / 0.250 s
600	0.030 s / 0.100 s

NEW!

MINI® Diode Fuse

Operating Temperature Range: -40˚C to +85˚C
Power Rating: 1/4 W Max
Housing Material: Thermoplastic
Terminal Material: C.R.S. (Ni/Zn Plated)
Terminal Retention: 25 N

MINI® DIODE FUSE TABLE

COLOR CODE	CURRENT RATING (A)	CARDED MATERIAL #
Black Diode	1A	02400113XP

Low Profile MINI® Blade Fuse

The Low Profile MINI® fuse has similar performance characteristics as the standard MINI® fuse. The lower overall height allows for space and weight savings.

Low Profile MINI® Blade Fuse

The Low Profile MINI® fuse is designed to mate with tuning-fork terminals, which provides additional weight and material savings in fuse box designs by eliminating the need for female box terminals.

Voltage Rating: 58 VDC
Interrupting Rating: 1000A @ 58 VDC
Operating Temperature Range: -40˚C to +125˚C
Terminals: either Ag or Sn plated zinc
Housing Materials: Nylon composite

LOW PROFILE MINI® FUSE TABLE

COLOR CODE	CURRENT RATING (A)	BOXED		CARDED			CARDED
		MATERIAL #	CATALOG #	MATERIAL #	CATALOG #	NEW PACKAGING MATERIAL #	PRO•TEK Professional Pak (Plus Pack) MATERIAL #
Gray	2A	LMIN002.V	LMIN2	---	---	---	---
Tan	5A	LMIN005.V	LMIN5	LMIN005.VP	LMIN005BP	LMIN005.VPA	LMIN005.ZXPROA
Brown	7.5A	LMIN07.5V	LMIN7.5	---	---	---	---
Red	10A	LMIN010.V	LMIN10	LMIN010.VP	LMIN010BP	LMIN010.VPA	LMIN010.ZXPROA
Blue	15A	LMIN015.V	LMIN15	LMIN015.VP	LMIN015BP	LMIN015.VPA	LMIN015.ZXPROA
Yellow	20A	LMIN020.V	LMIN20	LMIN020.VP	LMIN020BP	LMIN020.VPA	LMIN020.ZXPROA
Clear	25A	LMIN025.V	LMIN25	LMIN025.VP	LMIN025BP	LMIN025.VPA	LMIN025.ZXPROA
Green	30A	LMIN030.V	LMIN30	LMIN030.VP	LMIN030BP	LMIN030.VPA	LMIN030.ZXPROA

 ©2015 Littelfuse Automotive Aftermarket Circuit Protection

DIMENSIONS

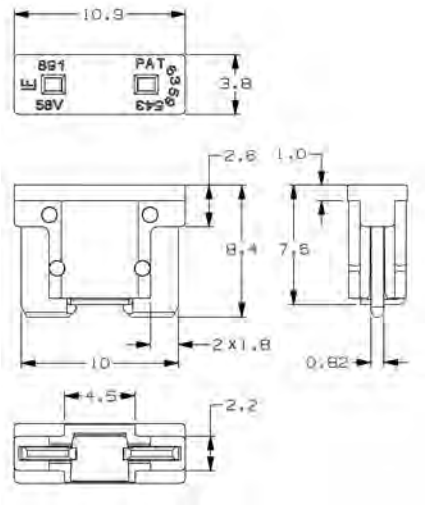

TEMPERATURE RERATING CURVE

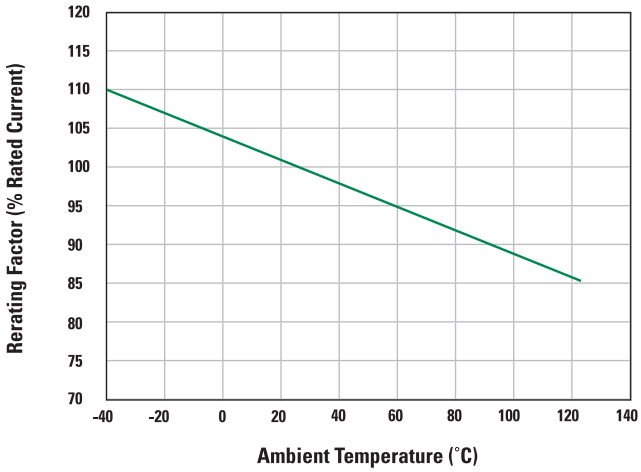

TIME-CURRENT CHARACTERISTIC CURVES

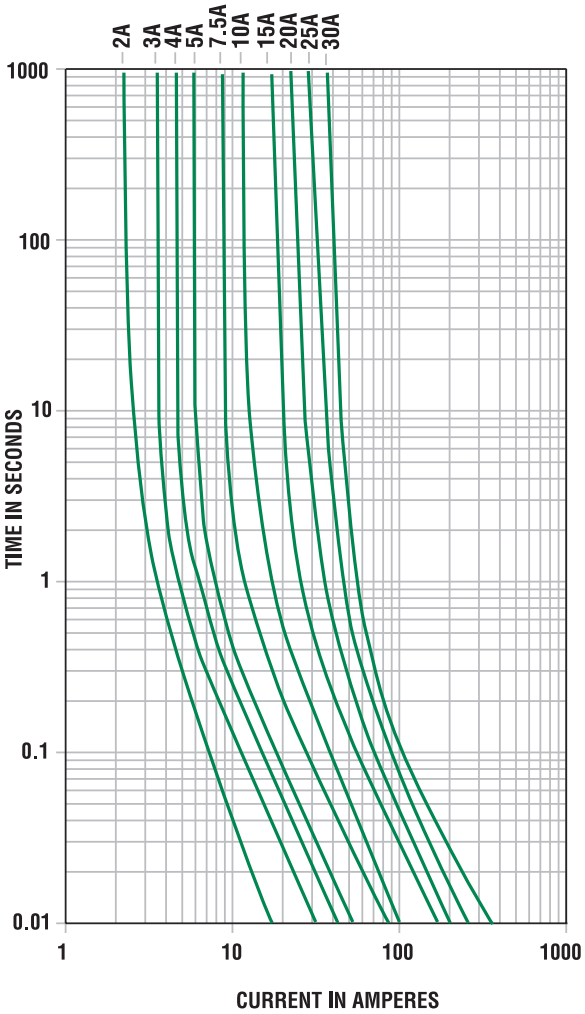

TIME-CURRENT CHARACTERISTICS

% of Rating	Opening Time Min / Max (s)
110	360,000 s / –
135	0.750 s / 120 s
200	0.150 s / 5 s
350	0.080 s / 0.250 s
600	0.030 s / 0.100 s

MICRO2™ Blade Fuse

The MICRO2™ Fuse is the new standard for vehicle circuit protection.

MICRO2™ Blade Fuse

Its sub-miniature design meets the need for more circuits to be protected while utilizing less space and its ability to cope with high temperatures in adverse environments makes the MICRO2™ Fuse the recommended choice for protection.

Voltage Rating: 32 VDC
Interrupting Ratings: 1000A @ 32 VDC
Operating Temperature Range: -40˚C to +125˚C

DIMENSIONS

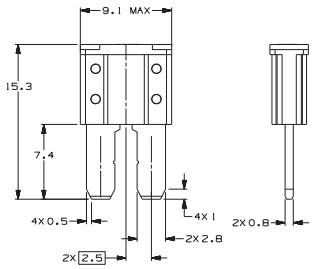

TIME-CURRENT CHARACTERISTICS

% of Rating	Opening Time Min / Max (s)
110	100 h / –
135	0.75 s / 120 s
160	0.30 s / 50 s
200	0.150 s / 5 s
350	0.04 s / 0.50 s
600	0.02 s / 0.100 s

TIME-CURRENT CHARACTERISTIC CURVES

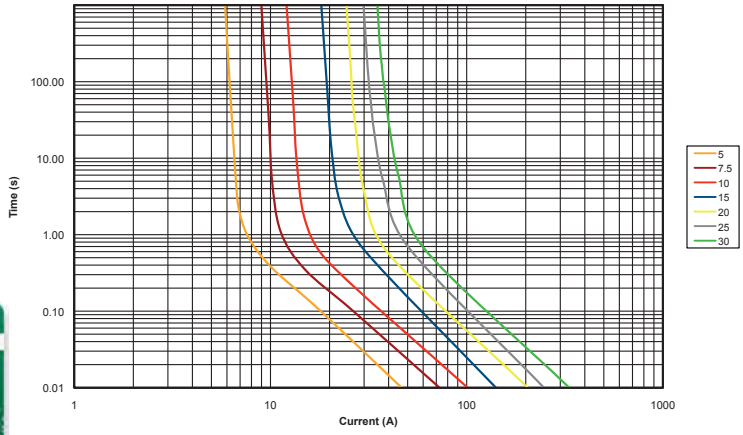

MICRO2™ FUSE TABLE

COLOR CODE	CURRENT RATING (A)	BULK 4000 PC MATERIAL #	BULK 500 PC MATERIAL #	BULK 50 PC MATERIAL #	BOXED 5 PC MATERIAL #	CARDED 5 PC MATERIAL #
Tan	5A	0327005.ZXS	0327005.UXS	0327005.LXS	MIC2005.V	MIC2005.VP
Brown	7.5A	032707.5ZXS	032707.5UXS	032707.5LXS	MIC207.5V	MIC207.5VP
Red	10A	0327010.ZXS	0327010.UXS	0327010.LXS	MIC2010.V	MIC2010.VP
Blue	15A	0327015.ZXS	0327015.UXS	0327015.LXS	MIC2015.V	MIC2015.VP
Yellow	20A	0327020.ZXS	0327020.UXS	0327020.LXS	MIC2020.V	MIC2020.VP
Clear	25A	0327025.ZXS	0327025.UXS	0327025.LXS	MIC2025.V	MIC2025.VP
Green	30A	0327030.ZXS	0327030.UXS	0327030.LXS	MIC2030.V	MIC2030.VP

TEMPERATURE RERATING CURVE

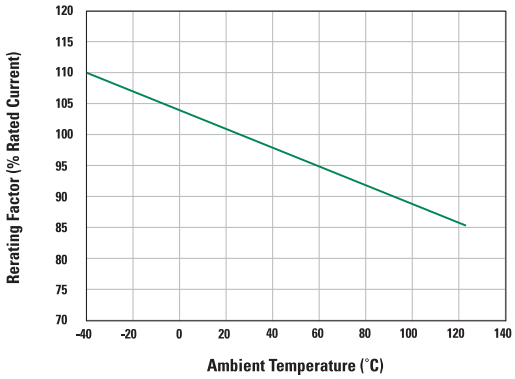

©2015 Littelfuse Automotive Aftermarket Circuit Protection

MICRO3™ Blade Fuse

The MICRO3™ Fuse is the new standard for vehicle circuit protection.

MICRO3™ Blade Fuse

The MICRO3™ Fuse is the new standard for vehicle circuit protection. The MICRO3™ Fuse has 3 terminals and 2 fuse elements with a common center terminal. Its sub-miniature design meets the need for more circuits to be protected while utilizing less space and its ability to cope with high temperatures in adverse environments makes the MICRO3™ Fuse the recommended choice for protection.

Voltage Rating: 32 VDC
Interrupting Ratings: 1000A @ 32 VDC
Operating Temperature Range: -40˚C to +125˚C

TIME-CURRENT CHARACTERISTICS

% of Rating	Opening Time Min / Max (s)
110	100 h / –
135	0.75 s / 120 s
160	0.30 s / 50 s
200	0.150 s / 5 s
350	0.04 s / 0.50 s
600	0.02 s / 0.100 s

TIME-CURRENT CHARACTERISTIC CURVES

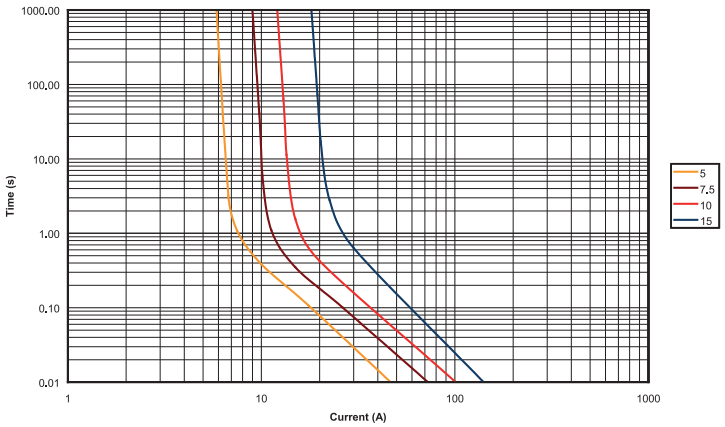

TEMPERATURE RERATING CURVE

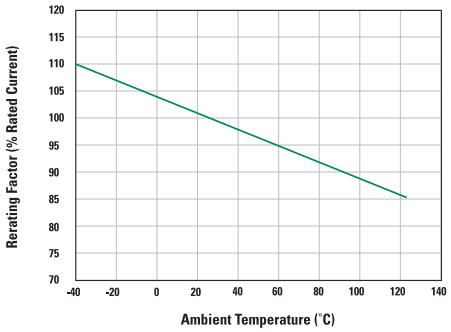

DIMENSIONS

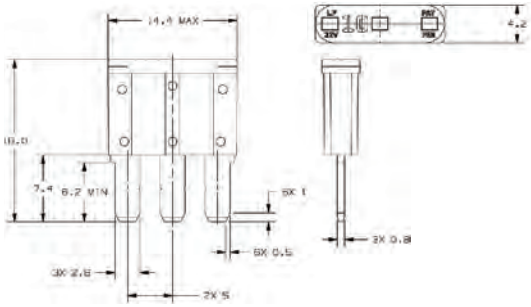

MICRO3™ FUSE TABLE

COLOR CODE	CURRENT RATING (A)	BULK 2000 PC	BULK 50 PC	BOXED 5 PC	CARDED 5 PC
		MATERIAL #	MATERIAL #	MATERIAL #	MATERIAL #
Tan	5A	0337005.PXS	0337005.LXS	MIC3005.V	MIC3005.VP
Brown	7.5A	033707.5PXS	033707.5LXS	MIC307.5V	MIC307.5VP
Red	10A	0337010.PXS	0337010.LXS	MIC3010.V	MIC3010.VP
Blue	15A	0337015.PXS	0337015.LXS	MIC3015.V	MIC3015.VP

©2015 Littelfuse Automotive Aftermarket Circuit Protection

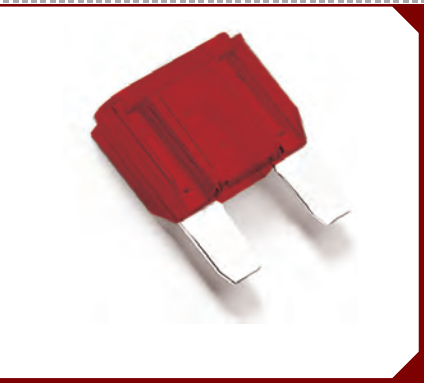

MAXI Blade Fuse

The MAXI fuse uses "Diffusion Pill Technology" to provide predictable time delay characteristic and low heat dissipation.

MAXI Blade Fuse

MAXI Fuses are primarily used for under hood applications and are produced with a high temperature polymer and silver plated blades. They replace the commonly used fusible wire or fusible link to protect a high current segment or system of the wiring harness. Features Littelfuse designed industry standard color coding to indicate amp rating.

Voltage Rating: 32 VDC
Interrupting Ratings: 1000A @ 32 VDC
Operating Temperature Range: -40˚C to +125˚C
Terminals: Ag plated

MAXI Smart Glow Blade Fuse

Smart Glow fuses are innovative automotive style fuses that feature an indicator light that glows when the fuse is blown, saving time to troubleshoot an open circuit.

Voltage Rating: 32 VDC
Interrupting Ratings: 1000A @ 32 VDC
Operating Temperature Range: -40˚C to +125˚C
Terminals: Ag plated

MAXI FUSE TABLE

COLOR CODE	CURRENT RATING (A)	BOXED		CARDED			CARDED		
		MATERIAL #	CATALOG #	MATERIAL #	CATALOG #	NEW PACKAGING MATERIAL #	MATERIAL #	CATALOG #	NEW PACKAGING MATERIAL #
Yellow	20A	0MAX020.X	MAX20	0MAX020.XP	MAX20BP	0MAX020.XPA	0MAX020.XPGLO	30-1020	0MAX020.XPGLOA
Green	30A	0MAX030.X	MAX30	0MAX030.XP	MAX30BP	0MAX030.XPA	0MAX030.XPGLO	30-1030	0MAX030.XPGLOA
Orange	40A	0MAX040.X	MAX40	0MAX040.XP	MAX40BP	0MAX040.XPA	0MAX040.XPGLO	30-1040	0MAX040.XPGLOA
Red	50A	0MAX050.X	MAX50	0MAX050.XP	MAX50BP	0MAX050.XPA	0MAX050.XPGLO	30-1050	0MAX050.XPGLOA
Blue	60A	0MAX060.X	MAX60	0MAX060.XP	MAX60BP	0MAX060.XPA	0MAX060.XPGLO	30-1060	0MAX060.XPGLOA
Tan	70A	0MAX070.X	MAX70	---	---	---	0MAX070.XPGLO	30-1070	0MAX070.XPGLOA
Clear	80A	0MAX080.X	MAX80	0MAX080.XP	MAX80BP	0MAX080.XPA	0MAX080.XPGLO	30-1080	0MAX080.XPGLOA
Purple	100A	---	---	---	---	---	0MAX100.XPGLO	30-1100	0MAX100.XPGLOA

©2015 Littelfuse Automotive Aftermarket Circuit Protection

DIMENSIONS

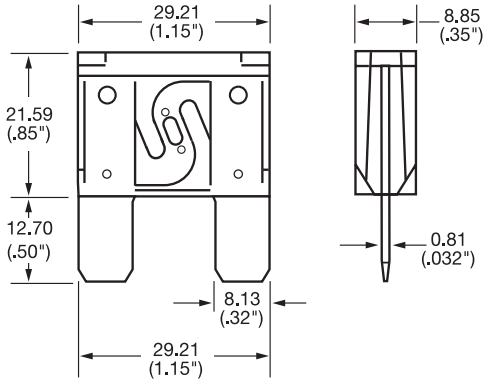

TEMPERATURE RERATING CURVE

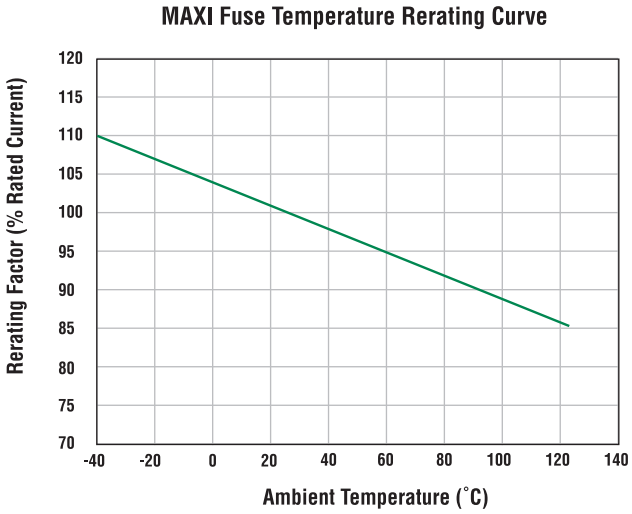

TIME-CURRENT CHARACTERISTIC CURVES

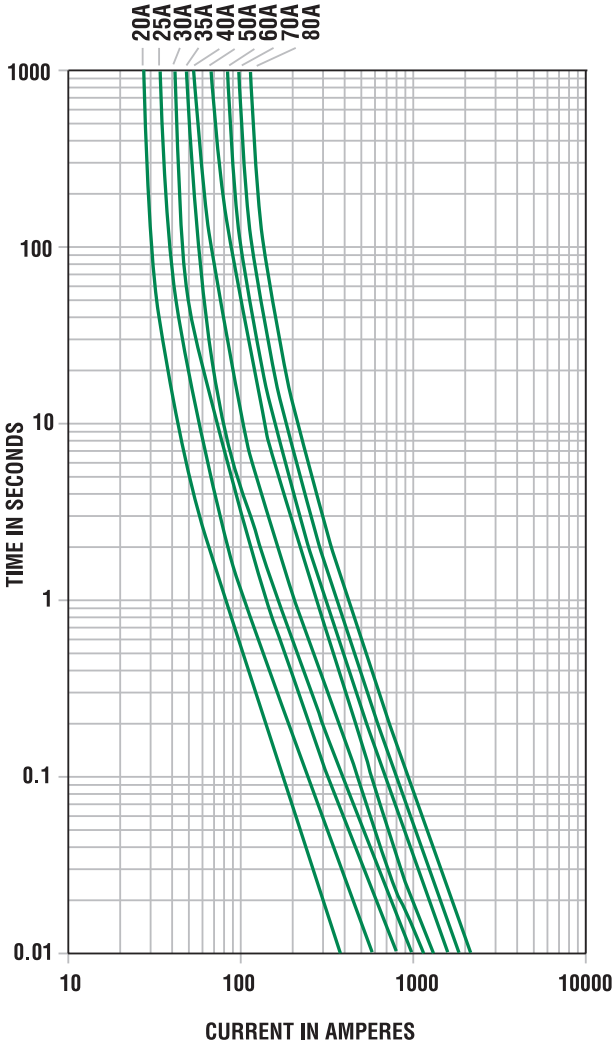

TIME-CURRENT CHARACTERISTICS

% of Rating	Opening Time Min / Max (s)
110	360,000 s / –
135	60 s / 1,800 s
200	2 s / 60 s
350	0.20 s / 7 s
600	0.040 s / 1 s

JCASE® High Amp Fuse

The JCASE® is a cartridge style fuse with female terminal design. JCASE® provides both increased time delay and low voltage drop to protect high current circuits. JCASE® has the ability to handle inrush currents. The JCASE® was designed and patented by Littelfuse.

JCASE® Fuse

Littelfuse patented high current fuse introduced in 1997 designed to replace the MAXI fuse and cartridge style fuses. Currently OEM on many new domestic and Japanese models. Smaller space saving footprint is being designed in by many OEM's. Patented technology provides both increased time delay and low voltage drop. Features ANSI standard OCR-A font for visual inspection systems, double spring-beam box terminal and unique secondary locking feature holds terminal firmly in place.

Voltage Rating Characteristics: 32V AC/DC Slo-Blo®
Interrupting Ratings: 1000A @ 32 VDC
Operating Temperature Range: -40˚C to +125˚C
Insertion Force: 53N max. (12lb)
Extraction Force: 9N min. (2lb)

JCASE® FUSE TABLE

COLOR CODE	CURRENT RATING (A)	BOXED		CARDED		
		MATERIAL #	CATALOG #	MATERIAL #	CATALOG #	NEW PACKAGING MATERIAL #
Blue	20A	JCAS020.X	JCAS20	JCAS020.XP	JCAS20BP	JCAS020.XPA
NEW! White	25A	JCAS025.X	JCAS25	JCAS025.XP	JCAS25BP	JCAS025.XPA
Pink	30A	JCAS030.X	JCAS30	JCAS030.XP	JCAS30BP	JCAS030.XPA
Green	40A	JCAS040.X	JCAS40	JCAS040.XP	JCAS40BP	JCAS040.XPA
Red	50A	JCAS050.X	JCAS50	JCAS050.XP	JCAS50BP	JCAS050.XPA
Yellow	60A	JCAS060.X	JCAS60	JCAS060.XP	JCAS60BP	JCAS060.XPA

©2015 Littelfuse Automotive Aftermarket Circuit Protection

DIMENSIONS

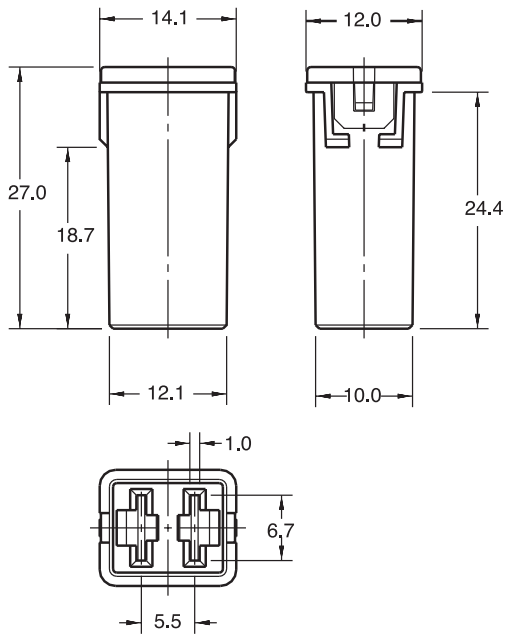

TEMPERATURE RERATING CURVE

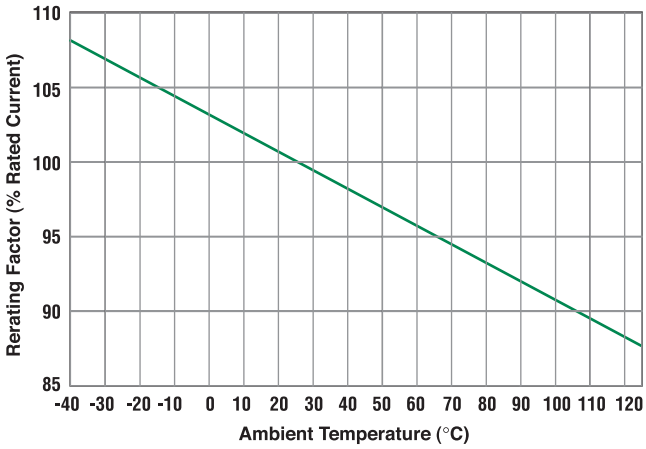

TIME-CURRENT CHARACTERISTIC CURVES

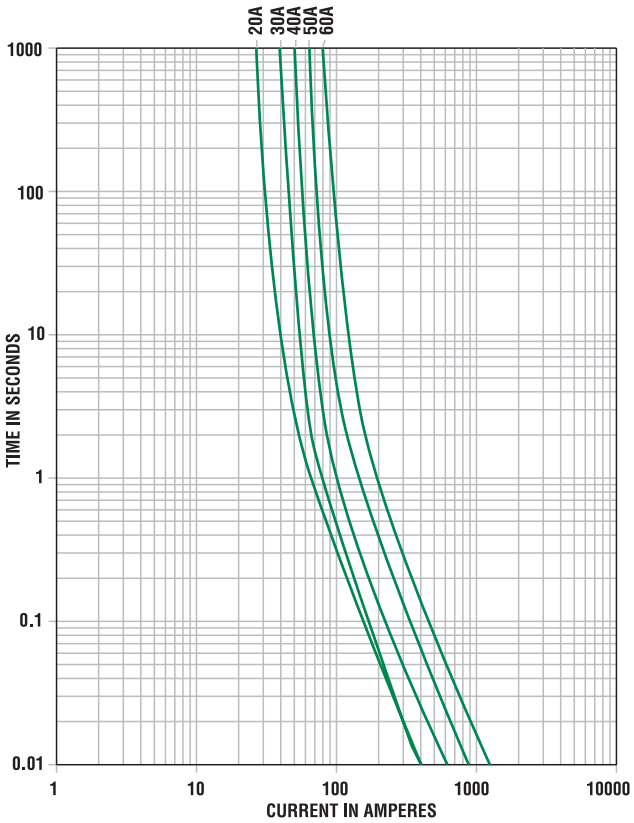

TIME-CURRENT CHARACTERISTICS

% of Rating	Opening Time Min / Max (s)
100	360,000 s / –
135	60 s / 1800 s
200	4 s / 60 s
350	0.200 s / 7 s
600	0.040 s / 1 s

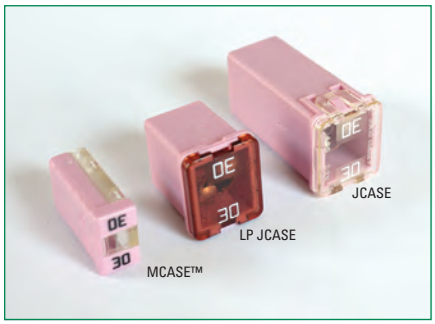

6

Low Profile JCASE® Fuse

The Low Profile JCASE® fuse has similar performance characteristics as the standard JCASE® fuse. The lower overall height reduction allows for more space and weight savings and also allows for a shorter male blade terminal, saving additional weight and material in fuse box designs.

Low Profile JCASE® Fuse

Smaller space saving footprint is being designed in by many OEM's. Patented technology provides both increased time delay and low voltage drop. Features ANSI standard OCR-A font for visual inspection systems, double spring-beam box terminal and unique secondary locking feature holds terminal firmly in place.

Voltage Rating: 58 VDC
Interrupting Rating: 1000A @ 58 VDC
Operating Temperature Range: -40˚C to + 125˚C
Insertion Force: 53N Max. (12 lb.)
Extraction Force: 9N Min (2 lb.)

TIME-CURRENT CHARACTERISTICS

% of Rating	Opening Time Min / Max (s)
100	360,000 s / –
135	60 s / 1800 s
200	4 s / 60 s
350	0.200 s / 7 s
600	0.040 s / 1 s

DIMENSIONS

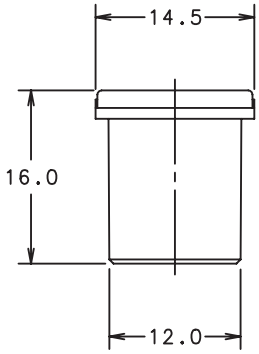

TEMPERATURE RERATING CURVE

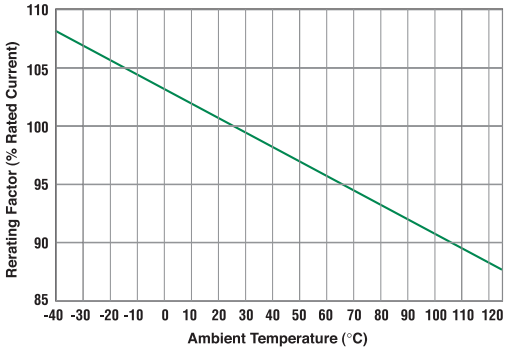

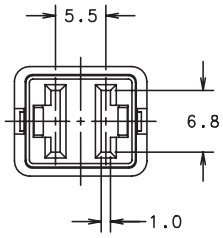

TIME-CURRENT CHARACTERISTIC CURVES

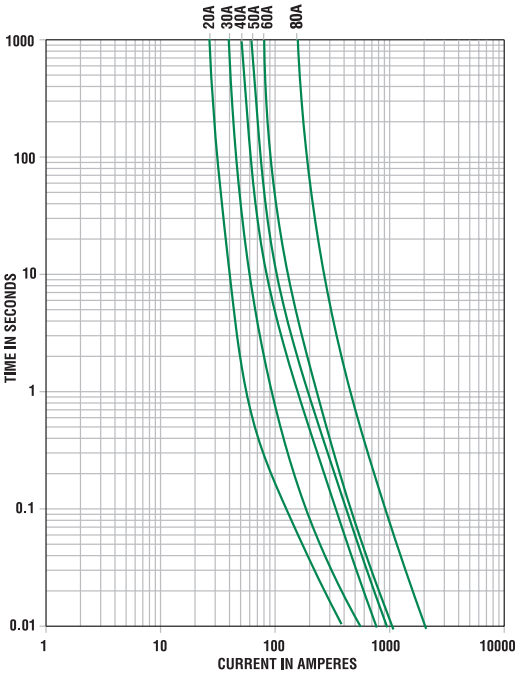

LOW PROFILE JCASE® FUSE TABLE

COLOR CODE	CURRENT RATING (A)	BOXED		CARDED		
		MATERIAL #	CATALOG #	MATERIAL #	CATALOG #	NEW PACKAGING MATERIAL #
Blue	20A	LJCA020.X	LJCA20	LJCA020.XP	LJCA20BP	LJCA020.XPA
NEW! White	25A	LJCA025.X	LJCA25	---	---	LJCA025.XPA
Pink	30A	LJCA030.X	LJCA30	LJCA030.XP	LJCA30BP	LJCA030.XPA
Green	40A	LJCA040.X	LJCA40	LJCA040.XP	LJCA40BP	LJCA040.XPA
Red	50A	LJCA050.X	LJCA50	LJCA050.XP	LJCA50BP	LJCA050.XPA
Yellow	60A	LJCA060.X	LJCA60	LJCA060.XP	LJCA60BP	LJCA060.XPA

©2015 Littelfuse Automotive Aftermarket Circuit Protection

MCASE™ Fuse

The MCASE™ is the latest cartridge style fuse with female terminals for 2.8 mm male terminals.

MCASE™ Fuse

It has a miniaturized footprint for optimal usage of space. It is a time delayed fuse and can handle inrush currents. MCASE™ is designed and patented by Littelfuse.

Voltage Rating: 32 VDC
Interrupting Ratings: 1000A @ 32 VDC
Operating Temperature Range: -40˚C to +125˚C
Insertion Force: 44.1N Max. (9.9 lb.)
Extraction Force: 4N Min. (0.9 lb). I 24.5N Max. (5.5 lb)

TIME-CURRENT CHARACTERISTICS

% of Rating	Opening Time Min / Max (s)
100	100 hrs / –
135	60 s / 1800 s
200	5 s / 60 s
350	0.2 s / 7 s
600	0.04 s / 1 s

DIMENSIONS

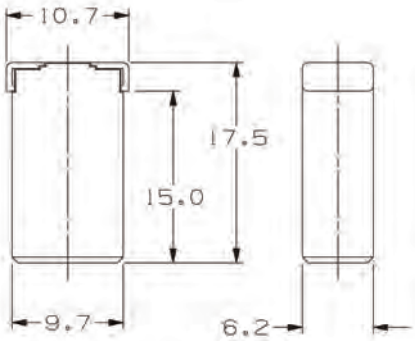

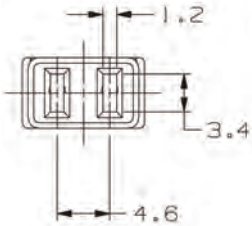

TIME-CURRENT CHARACTERISTIC CURVES

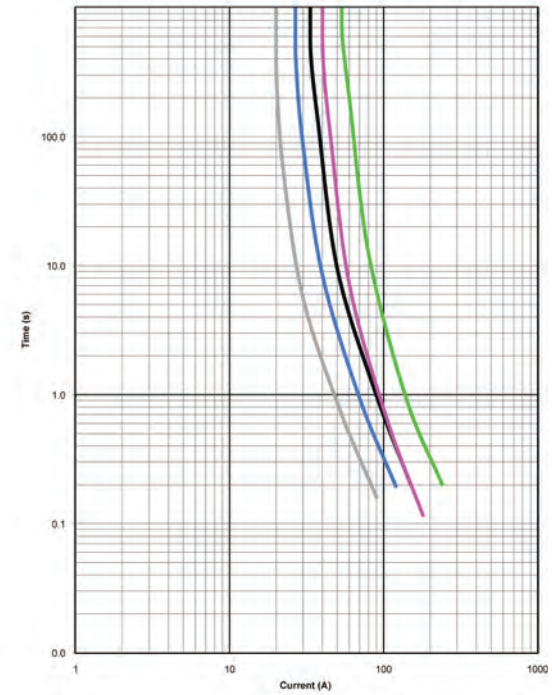

MCASE™ FUSE TABLE

COLOR CODE	CURRENT RATING (A)	BULK 2000 PC MATERIAL #	BULK 500 PC MATERIAL #	BOXED 1 PC MATERIAL #	CARDED MATERIAL #
Gray	15A	0695015.PX4	0695015.U	MCAS015.X	MCAS015.XP
Blue	20A	0695020.PX4	0695020.U	MCAS020.X	MCAS020.XP
White	25A	0695025.PX4	0695025.U	MCAS025.X	MCAS025.XP
Pink	30A	0695030.PX4	0695030.U	MCAS030.X	MCAS030.XP
Green	40A	0695040.PX4	0695040.U	MCAS040.X	MCAS040.XP
Shunt - 2000 pc		0695900.PX4	---	---	---
Shunt - 500 pc		0695900.UX4	---	---	---

©2015 Littelfuse Automotive Aftermarket Circuit Protection

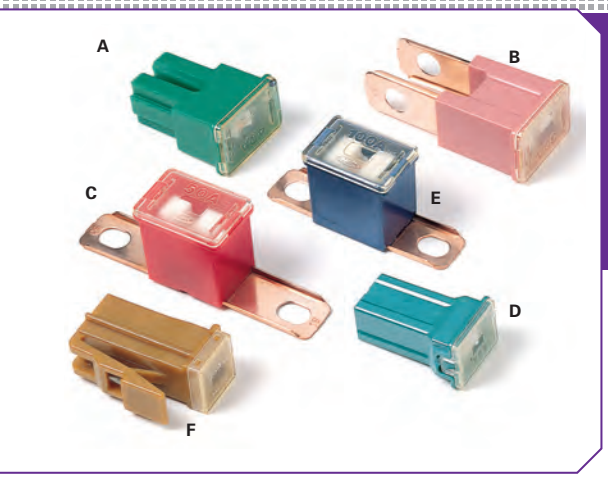

PAL Auto Link Fuses

Commonly found on many Japanese and Domestic built vehicles in current ratings up to 140 amperes. Available with female connector, male connector, bent connector and locking female connector. Color coded to indicate amp rating.

A. AUTO LINK PAL FEMALE TERMINAL

COLOR CODE	CURRENT RATING (A)	BOXED		CARDED		
		MATERIAL #	CATALOG #	MATERIAL #	CATALOG #	NEW PACKAGING MATERIAL #
Blue	20A	0PAL020.X	PAL020	0PAL020.XP	PAL020BP	0PAL020.XPA
Pink	30A	0PAL030.X	PAL030	0PAL030.XP	PAL030BP	0PAL030.XPA
Green	40A	0PAL040.X	PAL040	0PAL040.XP	PAL040BP	0PAL040.XPA
Red	50A	0PAL050.X	PAL050	0PAL050.XP	PAL050BP	0PAL050.XPA
Yellow	60A	0PAL060.X	PAL060	0PAL060.XP	PAL060BP	0PAL060.XPA

B. AUTO LINK PAL STRAIGHT MALE TERMINAL

COLOR CODE	CURRENT RATING (A)	BOXED		CARDED		
		MATERIAL #	CATALOG #	MATERIAL #	CATALOG #	NEW PACKAGING MATERIAL #
Pink	30A	0PAL130.X	PAL130	0PAL130.XP	PAL130BP	0PAL130.XPA
Yellow	60A	0PAL160.X	PAL160	0PAL160.XP	PAL160BP	0PAL160.XPA
Black	80A	0PAL180.X	PAL180	0PAL180.XP	PAL180BP	0PAL180.XPA
Blue	100A	0PAL1100X	PAL1100	0PAL1100XP	PAL1100BP	0PAL1100XPA
Gray	120A	0PAL1120X	PAL1120	0PAL1120XP	PAL1120BP	0PAL1120XPA

C. AUTO LINK PAL 13/16" BENT MALE TERMINAL

COLOR CODE	CURRENT RATING (A)	BOXED		CARDED		
		MATERIAL #	CATALOG #	MATERIAL #	CATALOG #	NEW PACKAGING MATERIAL #
Pink	30A	0PAL230.X	PAL230	0PAL230.XP	PAL230BP	0PAL230.XPA
Green	40A	0PAL240.X	PAL240	0PAL240.XP	PAL240BP	0PAL240.XPA
Red	50A	0PAL250.X	PAL250	0PAL250.XP	PAL250BP	0PAL250.XPA
Yellow	60A	0PAL260.X	PAL260	0PAL260.XP	PAL260BP	0PAL260.XPA
Brown	70A	0PAL270.X	PAL270	0PAL270.XP	PAL270BP	0PAL270.XPA
Black	80A	0PAL280.X	PAL280	0PAL280.XP	PAL280BP	0PAL280.XPA
Blue	100A	0PAL2100X	PAL2100	0PAL2100XP	PAL2100BP	0PAL2100XPA
Gray	120A	0PAL2120X	PAL2120	0PAL2120XP	PAL2120BP	0PAL2120XPA
Purple	140A	---	---	0PAL2140XP	PAL2140BP	0PAL2140XPA

D. AUTO LINK PAL MINI FEMALE TERMINAL

COLOR CODE	CURRENT RATING (A)	BOXED		CARDED		
		MATERIAL #	CATALOG #	MATERIAL #	CATALOG #	NEW PACKAGING MATERIAL #
Pink	30A	0PAL330.X	PAL330	0PAL330.XP	PAL330BP	0PAL330.XPA
Green	40A	0PAL340.X	PAL340	0PAL340.XP	PAL340BP	0PAL340.XPA

E. AUTO LINK PAL 9/16" BENT MALE TERMINAL

COLOR CODE	CURRENT RATING (A)	BOXED		CARDED		
		MATERIAL #	CATALOG #	MATERIAL #	CATALOG #	NEW PACKAGING MATERIAL #
Pink	30A	0PAL430.X	PAL430	0PAL430.XP	PAL430BP	0PAL430.XPA
Green	40A	0PAL440.X	PAL440	0PAL440.XP	PAL440BP	0PAL440.XPA
Red	50A	0PAL450.X	PAL450	0PAL450.XP	PAL450BP	0PAL450.XPA
Black	80A	0PAL480.X	PAL480	0PAL480.XP	PAL480BP	0PAL480.XPA
Blue	100A	0PAL4100X	PAL4100	0PAL4100XP	PAL4100BP	0PAL4100XPA
White	120A	---	---	0PAL4120XP	PAL4120BP	0PAL4120XPA
Purple	140A	---	---	0PAL4140XP	PAL4140BP	0PAL4140XPA

F. AUTO LINK PAL LOCKING FEMALE TERMINAL

COLOR CODE	CURRENT RATING (A)	BOXED		CARDED		
		MATERIAL #	CATALOG #	MATERIAL #	CATALOG #	NEW PACKAGING MATERIAL #
Brown	25A	0PAL525.X	PAL525	0PAL525.XP	PAL525BP	0PAL525.XPA
Green	30A	0PAL530.X	PAL530	0PAL530.XP	PAL530BP	0PAL530.XPA

©2015 Littelfuse Automotive Aftermarket Circuit Protection

GLASS Fuses

AG and SFE fuses were designed into North American vehicles prior to 1981. Glass fuses are also used for auto accessory applications.

AG Fuses

Originally stood for "all glass." The automotive industry uses the "AG" prefix (AGC, AGW) for most glass fuses. They vary in length, diameter and amperage rating.

Voltage Rating: 32V AC/DC
250V may be substituted

SFE Fuses

Glass fuses designed to specifications set by the Society of Fuse Engineers. All are 1/4 inch in diameter, but vary in length according to the ampere rating to ensure accurate fuse replacement.

Voltage Rating: 32V AC/DC
250V may be substituted

GBC Fuses

A thermoplastic type, torpedo shaped fuse that can be currently found in many European cars. Consisting of a heat resistant body, the fuse element stretches over the exterior of the body from end to end. The bodies vary in color (by amperage) to ensure proper replacement.

Voltage Rating: 32V AC/DC
250V may be substituted

CURRENT RATING (A)	BOXED		CARDED		
	MATERIAL#	CATALOG#	MATERIAL#	CATALOG#	NEW PACKAGING MATERIAL #
AGA					
1A	0AGA001.V	AGA1	0AGA001.VP	AGA1BP	0AGA001.VPA
2A	0AGA002.V	AGA2	0AGA002.VP	AGA2BP	0AGA002.VPA
3A	0AGA003.V	AGA3	0AGA003.VP	AGA3BP	0AGA003.VPA
5A	0AGA005.V	AGA5	0AGA005.VP	AGA5BP	0AGA005.VPA
6A	0AGA006.V	AGA6	---	---	---
7.5A	0AGA07.5V	AGA7.5	---	---	---
10A	0AGA010.V	AGA10	0AGA010.VP	AGA10BP	0AGA010.VPA
15A	0AGA015.V	AGA15	0AGA015.VP	AGA15BP	0AGA015.VPA
20A	0AGA020.V	AGA20	0AGA020.VP	AGA20BP	0AGA020.VPA
25A	0AGA025.V	AGA25	---	---	---
30A	0AGA030.V	AGA30	0AGA030.VP	AGA30BP	0AGA030.VPA
AGC					
.5A	0AGC.500V	AGC.500	---	---	---
1A	0AGC001.V	AGC1	0AGC001.VP	AGC1BP	0AGC001.VPA
1.5A	0AGC01.5V	AGC1.5	0AGC01.5VP	AGC1.5BP	0AGC01.5VPA
2A	0AGC002.V	AGC2	0AGC002.VP	AGC2BP	0AGC002.VPA
2.5A	0AGC02.5V	AGC2.5	0AGC02.5VP	AGC2.5BP	0AGC2.5VPA
3A	0AGC003.V	AGC3	0AGC003.VP	AGC3BP	0AGC003.VPA
4A	0AGC004.V	AGC4	0AGC004.VP	AGC4BP	0AGC004.VPA
5A	0AGC005.V	AGC5	0AGC005.VP	AGC5BP	0AGC005.VPA
6A	0AGC006.V	AGC6	0AGC006.VP	AGC6BP	0AGC006.VPA
7A	0AGC007.V	AGC7	---	---	---
7.5A	0AGC07.5V	AGC7.5	0AGC07.5VP	AGC7.5BP	0AGC07.5VPA
8A	0AGC008.V	AGC8	---	---	---
10A	0AGC010.V	AGC10	0AGC010.VP	AGC10BP	0AGC010.VPA
15A	0AGC015.V	AGC15	0AGC015.VP	AGC15BP	0AGC015.VPA
20A	0AGC020.V	AGC20	0AGC020.VP	AGC20BP	0AGC020.VPA
25A	0AGC025.V	AGC25	0AGC025.VP	AGC25BP	0AGC025.VPA
30A	0AGC030.V	AGC30	0AGC030.VP	AGC30BP	0AGC030.VPA
35A	0AGC035.V	AGC35	0AGC035.VP	AGC35BP	0AGC035.VPA
AGU					
1A	0AGU001.T	AGU1	---	---	---
2A	0AGU002.T	AGU2	---	---	---
3A	0AGU003.T	AGU3	---	---	---
4A	0AGU004.T	AGU4	---	---	---
5A	0AGU005.T	AGU5	---	---	---
10A	0AGU010.T	AGU10	---	---	---
15A	0AGU015.T	AGU15	---	---	---

CURRENT RATING (A)	BOXED		CARDED		
	MATERIAL#	CATALOG#	MATERIAL#	CATALOG#	NEW PACKAGING MATERIAL#
AGU					
20A	0AGU020.T	AGU20	---	---	---
25A	0AGU025.T	AGU25	---	---	---
30A	0AGU030.T	AGU30	---	---	---
35A	0AGU035.T	AGU35	---	---	---
40A	0AGU040.T	AGU40	0AGU040.VPG	AGU40BPG	0AGU040.VPGA
50A	0AGU050.T	AGU50	0AGU050.VPG	AGU50BPG	0AGU050.VPGA
60A	0AGU060.T	AGU60	0AGU060.VPG	AGU60BPG	0AGU060.VPGA
AGW					
1A	0AGW001.V	AGW1	---	---	---
1.5A	0AGW01.5V	AGW1.5	---	---	---
2.5A	0AGW02.5V	AGW2.5	---	---	---
3A	0AGW003.V	AGW3	---	---	---
4A	0AGW004.V	AGW4	---	---	---
5A	0AGW005.V	AGW5	0AGW005.VP	AGW5BP	0AGW005.VPA
6A	0AGW006.V	AGW6	---	---	---
15A	0AGW015.V	AGW15	0AGW015.VP	AGW15BP	0AGW015.VPA
20A	0AGW020.V	AGW20	0AGW020.VP	AGW20BP	0AGW020.VPA
30A	0AGW030.V	AGW30	0AGW030.VP	AGW30BP	0AGW030.VPA
AGX					
2A	0AGX002.V	AGX2	---	---	---
3A	0AGX003.V	AGX3	---	---	---
20A	0AGX020.V	AGX20	0AGX020.VP	AGX20BP	0AGX020.VPA
25A	0AGX025.V	AGX25	0AGX025.VP	AGX25BP	0AGX025.VPA
30A	0AGX030.V	AGX30	0AGX030.VP	AGX30BP	0AGX030.VPA
GBC					
5A	0GBC005.V	GBC5	---	---	---
8A	0GBC008.V	GBC8	0GBC008.VP	GBC8BP	0GBC008.VPA
16A	0GBC016.V	GBC16	0GBC016.VP	GBC16BP	0GBC016.VPA
25A	0GBC025.V	GBC25	0GBC025.VP	GBC25BP	0GBC025.VPA
SFE					
4A	0SFE004.V	SFE4	0SFE004.VP	SFE4BP	0SFE004.VPA
6A	0SFE006.V	SFE6	0SFE006.VP	SFE6BP	0SFE006.VPA
7.5A	0SFE07.5V	SFE7.5	0SFE07.5VP	SFE7.5BP	0SFE07.5VPA
9A	0SFE009.V	SFE9	0SFE009.VP	SFE9BP	0SFE009.VPA
14A	0SFE014.V	SFE14	0SFE014.VP	SFE14BP	0SFE014.VPA
20A	0SFE020.V	SFE20	0SFE020.VP	SFE20BP	0SFE020.VPA
30A	0SFE030.V	SFE30	0SFE030.VP	SFE30BP	0SFE030.VPA

Glass and Ceramic Fuses

A complete line of 3 AG 1" x 1-1/4" fuses designed for battery chargers, diagnostic equipment, appliances and sophisticated electronic equipment. Available bulk, boxed, and carded. Consult your Littelfuse representative or factory for information on glass and ceramic fuses.

3AG SLO-BLO® Indicating Fuse

Littelfuse patented design Indicating fuse instantly shows whether fuse is blown through discoloration of the glass body. Reduces downtime by eliminating time consuming circuit testing and guesswork. This unique design offers the same characteristics as the standard 3AG Slo-Blo 313 fuse.

Voltage Rating: 250V (1/2 – 8A), 32V (10A).
Approvals: UL listed: 1/2 – 8A, Recognized under the Components Program of UL: 10A, CSA Certified: 1/2 – 8A.

BOXED	VOLTAGE RATING	DESCRIPTION
313.500VID	250V	1/2A Indicating 3AG Slo-Blo
313001VID	250V	1A Indicating 3AG Slo-Blo
3131.50VID	250V	1-1/2A Indicating 3AG Slo-Blo
313002VID	250V	2A Indicating 3AG Slo-Blo
313003VID	250V	3A Indicating 3AG Slo-Blo
313004VID	250V	4A Indicating 3AG Slo-Blo
313005VID	250V	5A Indicating 3AG Slo-Blo
3136.25VID	250V	6-1/4A Indicating 3AG Slo-Blo
313007VID	250V	7A Indicating 3AG Slo-Blo
313008VID	250V	8A Indicating 3AG Slo-Blo
313010VID	32V	10A Indicating 3AG Slo-Blo

3AG Fast-Acting Fuse

Fast-acting protection of electronic equipment and appliances. The circuit protection standard for cost effective reliability and performance.

Voltage Rating: 250V (1/4 – 10A), 32V (10A – 35A).
Approvals: UL listed and CSA Certified.

BOXED	VOLTAGE RATING	DESCRIPTION
312.250V	250V	1/4A 3AG Fast-Acting
312.500V	250V	1/2A 3AG Fast-Acting
312.750V	250V	3/4A 3AG Fast-Acting
312001V	250V	1A 3AG Fast-Acting
3121.25V	250V	1·1/4A 3AG Fast-Acting
31201.5V	250V	1·1/2A 3AG Fast-Acting
312002V	250V	2A 3AG Fast-Acting
31202.5V	250V	2-1/2A 3AG Fast-Acting
312003V	250V	3A 3AG Fast-Acting
312004V	250V	4A 3AG Fast-Acting
312005V	250V	5A 3AG Fast-Acting
312006V	250V	6A 3AG Fast-Acting
312007V	250V	7A 3AG Fast-Acting
312008V	250V	8A 3AG Fast-Acting
312010V	250V	10A 3AG Fast-Acting

3AG Slo-Blo® Fuse

3AG (313) series Slo-Blo® fuses have a time delay in the overload range, which provides superior protection for inductive loads such as motors, transformers and solenoids.

Voltage Rating: 250V (1/4 – 8A), 32V (10A – 30A).
Approvals: UL listed: 1/2 – 8A, Recognized under the Components Program of UL: 10A – 30A, CSA Certified: 1/2 – 8A.

BOXED	VOLTAGE RATING	DESCRIPTION
313.250V	250V	1/4A 3AG Slo-Blo
313.500V	250V	1/2A 3AG Slo-Blo
313.750V	250V	3/4A 3AG Slo-Blo
313001V	250V	1A 3AG Slo-Blo
31201.5V	250V	1-1/2A 3AG Slo-Blo
313002V	250V	2A 3AG Slo-Blo
31302.5V	250V	2-1/2A 3AG Slo-Blo
313003V	250V	3A 3AG Slo-Blo
313004V	250V	4A 3AG Slo-Blo
313005V	250V	5A 3AG Slo-Blo
3136.25V	250V	6-1/4A 3AG Slo-Blo
313008V	250V	8A 3AG Slo-Blo
313010V	32V	10A 3AG Slo-Blo
313015V	32V	15A 3AG Slo-Blo

3AG Normal-Blo Fuse

3AG (311) series Normal-Blo fuses are for use in radios, amplifiers, etc. Features straight type fuse element positioned to center of fuse for easy identification of blown fuse.

Voltage Rating: 32V.

BOXED	VOLTAGE RATING	DESCRIPTION
311005V	32V	5A 3AG Normal-Blo
311010V	32V	10A 3AG Normal-Blo
311015V	32V	15A 3AG Normal-Blo
311025V	32V	20A 3AG Normal-Blo

©2015 Littelfuse Automotive Aftermarket Circuit Protection

8AG Normal-Blo Fuse

8AG (362) series Normal-Blo fuses are smaller in size (1/4" x 1") and are designed to be used where space limitations prevent the use of 3AG fuses.

Voltage Rating: 32V.
Approvals: UL listed: 1/8 – 5A, CSA Certified: 1/4 – 5A.

BOXED	VOLTAGE RATING	DESCRIPTION
362002V	32V	2A 8AG Normal-Blo
362005V	32V	5A 8AG Normal-Blo

3AB Fast-Acting & Slo-Blo® Ceramic Fuse

Ceramic body construction permits higher interrupting and voltage ratings. Ideal for applications where high current loads are expected.

Voltage Rating: 250V (1/8 – 20A), 125V (25 – 30A).
Approvals: UL listed and CSA Certified: 1/8 – 15A, Recognized under the Components Program of UL: 20 – 30A.

BOXED	VOLTAGE RATING	DESCRIPTION
314010V	250V	10A 3AB Fast-Acting
314015V	250V	15A 3AB Fast-Acting
314020V	250V	20A 3AB Fast-Acting
326015V	250V	15A 3AB Slo-Blo

Circuit Breakers

Type I – Automatic Reset

Cycles or continuously resets until the fault is corrected. Type I circuit breakers are typically used to protect circuits which occasionally experience momentary overloads such as wiper motor and headlamp circuits where a self resetting device is preferred.

Type II – Modified Reset

Non-cycling, remains in open position while there is power to the circuit. Resets when ignition is turned off. Type II circuit breakers are typically used in applications where fuse replacement is objectionable, such as power window, seat and sunroof circuits.

Type III – Manual Reset

Manually resettable circuit breakers remain in the open position until a button, lever or other external reset device is manually depressed. Type III circuit breakers are typically used in applications where a manual reset is desired for safe diagnosis of a circuit fault.

MINI® Circuit Breakers Standard Mini Footprint Circuit Breakers:

Designed to fit in a MINI® Blade fuse block or panel. SAE Type II used primarily as a wiring harness protector in 12 volt DC automotive systems. Conforms to SAE J553C standard.

CURRENT RATING (A)	BOXED	
	MATERIAL #	CATALOG #
5A	0MIB005.X	MIB5
10A	0MIB010.X	MIB10
15A	0MIB015.X	MIB15
20A	0MIB020.X	MIB20
25A	0MIB025.X	MIB25
30A	0MIB030.X	MIB30

Wide Mini Footprint Circuit Breakers

Direct factory replacement for many domestic OEM applications. Designed to fit either in an ATO® or MINI® Blade fuse block or panel. Their blade configuration is of the MINI design and fit in a standard ATO fuse slot or across two MINI slots. Available in either SAE Type I cycling or SAE Type II non-cycling used primarily as a wiring harness protector in 12 volt DC automotive systems. Conforms to SAE J553C standard.

	CURRENT RATING (A)	APPLICATION	BOXED	
			MATERIAL #	CATALOG #
CYCLING	15A	Heavy Truck Headlamp	0MMB015.X	MMB15
CYCLING	20A	Automotive Headlamp	0MMB020.X	MMB20
NON-CYCLING	10A	Heavy Duty Truck	0MNB010.X	MNB10
NON-CYCLING	15A	Heavy Duty Truck	0MNB015.X	MNB15
NON-CYCLING	20A	Automotive/Heavy Truck	0MNB020.X	MNB20
NON-CYCLING	25A	Automotive/Heavy Truck	0MNB025.X	MNB25
NON-CYCLING	30A	Automotive/Heavy Truck	0MNB030.X	MNB30

©2015 Littelfuse Automotive Aftermarket Circuit Protection

Specialty OEM Circuit Breakers

Direct factory replacement for many domestic OEM vehicles. SAE Type I and Type II modified reset used primarily as a wiring harness protector in 12 volt DC automotive systems. Conforms to SAE J553C standard. Designed to mount in ATO style fuse blocks and panels.

CURRENT RATING (A)	APPLICATION	OEM #	BOXED		CARDED		
			MATERIAL #	CATALOG #	MATERIAL #	CATALOG #	NEW PACKAGING MATERIAL #
20A	Automotive Headlamp	GM# 12040816	---	---	0ACB020.XP	ACB20	0ACB020.XPA
30A	Power Windows, & Locks	GM# 01252240	---	---	0ACB030.XP	ACB30	0ACB030.XPA
20A	Power Windows	Ford# 83507005	0FCB020.X	FCB20	0FCB020.XP	FCB20BP	0FCB020.XPA
25A	Windows, Seats & Locks	Ford# D9AB-14526-BA Chrysler# 4527053	0CCB025.X	CCB25	0CCB025.XP	CCB25BP	0CCB025.XPA

Universal Circuit Breakers

Universal Circuit Breakers function identically and have same internal components as OEM breakers but offer the versatility of snap off terminals for greater flexibility. SAE Type II modified reset used primarily as a wiring harness protector in 12 volt DC automotive systems. Meets OEM requirements. Conforms to SAE J553C standard. Designed to mount in ATO style fuse blocks and panels.

CURRENT RATING (A)	BOXED		BOXED 100		BOXED BULK		CARDED		
	MATERIAL #	CATALOG #	MATERIAL #	CATALOG #	MATERIAL #	CATALOG #	MATERIAL #	CATALOG #	NEW PACKAGING MATERIAL #
5A	0UCB005.X	UCB5	BUCB005.H	BUCB5H	BUCB005.Z	BUCB5	0UCB005.XP	UCB5BP	0UCB005.XPA
6A	---	---	---	---	---	---	0UCB006.XP	UCB6BP	0UCB006.XPA
8A	---	---	---	---	---	---	0UCB008.XP	UCB8BP	0UCB008.XPA
10A	0UCB010.X	UCB10	BUCB010.H	BUCB10H	BUCB010.Z	BUCB10	0UCB010.XP	UCB10BP	0UCB010.XPA
15A	0UCB015.X	UCB15	BUCB015.H	BUCB15H	BUCB015.Z	BUCB15	0UCB015.XP	UCB15BP	0UCB015.XPA
20A	0UCB020.X	UCB20	BUCB020.H	BUCB20H	BUCB020.Z	BUCB20	0UCB020.XP	UCB20BP	0UCB020.XPA
25A	0UCB025.X	UCB25	BUCB025.H	BUCB25H	BUCB025.Z	BUCB25	0UCB025.XP	UCB25BP	0UCB025.XPA
30A	0UCB030.X	UCB30	BUCB030.H	BUCB30H	BUCB030.Z	BUCB30	0UCB030.XP	UCB30BP	0UCB030.XPA

MAXI Circuit Breakers

Direct factory replacement for many domestic OEM applications. Designed to fit a MAXI Blade fuse block or panel. Available in either SAE Type I cycling or SAE Type II non-cycling. Used primarily as a wiring harness protector in 12 volt DC automotive systems. Meet OEM requirements. Conforms to SAE J553C standard.

	CURRENT RATING (A)	APPLICATION	OEM #	BOXED	
				MATERIAL #	CATALOG #
CYCLING	20A	Automotive Headlamp	GM# 12065132	0MCB020.X	MCB20
CYCLING	30A	Automotive Headlamp, Seats & Wipers	GM# 12088553	0MCB030.X	MCB30
CYCLING	40A	---	---	0MCB040.X	MCB40
NON-CYCLING	10A	Automotive Power Devices Heavy Truck & Auto Cooling Fan	GM# 12077842 Ford# FGHT-14526-KA	0MXB020.X	MXB20
NON-CYCLING	15A	Automotive Power Window Heavy Truck & Auto Cooling Fan & Power Window	GM# 12077843 Ford# F6HT-14526-LA	0MXB020.X	MXB30

Fuse Clip Circuit Breakers

Direct replacement for many OEM applications. Designed for glass fuses without physical alteration in the system. Fits 1-1/4" fuse clips. SAE Type II non-cycling used primarily as a wiring harness protector in 12 volt DC automotive systems. Conforms to SAE J553C standard.

CURRENT RATING (A)	BOXED		CARDED		
	MATERIAL #	CATALOG #	MATERIAL #	CATALOG #	NEW PACKAGING MATERIAL #
10A	0CBF010.Z	CBF10	0CBF010.XP	CBF10BP	0CBF010.XPA
15A	0CBF015.Z	CBF15	0CBF015.XP	CBF15BP	0CBF015.XPA
20A	0CBF020.Z	CBF20	0CBF020.XP	CBF20BP	0CBF020.XPA
25A	0CBF025.Z	CBF25	0CBF025.XP	CBF25BP	0CBF025.XPA
30A	0CBF030.Z	CBF30	0CBF030.XP	CBF30BP	0CBF030.XPA
35A	0CBF035.Z	CBF35	0CBF035.XP	CBF35BP	0CBF035.XPA
40A	0CBF040.Z	CBF40	0CBF040.XP	CBF40BP	0CBF040.XPA

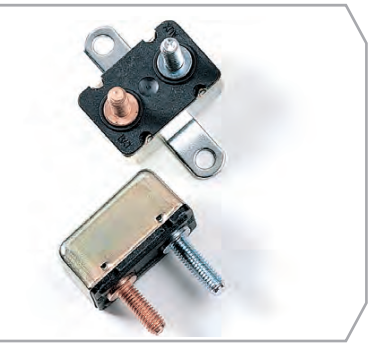

Stud Type Low Voltage (6–12 Volts) Circuit Breakers

SAE Type I automatic reset provides protection in installations where it is not possible to manually reset a breaker because of location or safety requirements. Used primarily as a wiring harness protector in 12 volt DC automotive systems. Conforms to SAE J553C standard. Available with mounting bracket-change part number from 812 to 813, e.g. 813005 ST.

CURRENT RATING (A)	BOXED W/O BRACKET		BOXED W/ BRACKET		CARDED		
	MATERIAL #	CATALOG #	MATERIAL #	CATALOG #	MATERIAL #	CATALOG #	NEW PACKAGING MATERIAL #
5A	0812005.ZXST	812005ST	0813005.ZXST	813005ST	---	---	---
6A	0812006.ZXST	812006ST	0813006.ZXST	813006ST	---	---	---
8A	0812008.ZXST	812008ST	0813008.ZXST	813008ST	---	---	---
10A	0812010.ZXST	812010ST	0813010.ZXST	813010ST	---	---	---
15A	0812015.ZXST	812015ST	0813015.ZXST	813015ST	---	---	---
20A	0812020.ZXST	812020ST	0813020.ZXST	813020ST	0813020.XP	813020BP	0813020.XPA
25A	0812025.ZXST	812025ST	0813025.ZXST	813025ST	---	---	---
30A	0812030.ZXST	812030ST	0813030.ZXST	813030ST	0813030.XP	813030BP	0813030.XPA
35A	0812035.ZXST	812035ST	0813035.ZXST	813035ST	---	---	---
40A	0812040.ZXST	812040ST	0813040.ZXST	813040ST	0813040.XP	813040BP	0813040.XPA
50A	0812050.ZXST	812050ST	0813050.ZXST	813050ST	0813050.XP	813050BP	0813050.XPA

©2014 Littelfuse Automotive Aftermarket Circuit Protection

Hi-Amp Type III Circuit Breakers

These high amp circuit breakers are typically used in auxiliary and accessory circuits for trucks, buses, RVs and marine applications. All high amp circuit breakers comply with the SAE J1117 standard for ignition protection and have applications in battery charger systems and DC audio systems.

CURRENT RATING (A)	BOXED		CARDED		
	MATERIAL #	CATALOG #	MATERIAL #	CATALOG #	NEW PACKAGING MATERIAL #
50A	0185050.X	185050	---	---	---
60A	0185060.X	185060	---	---	---
70A	0185070.X	185070	---	---	---
80A	0185080.X	185080	---	---	---
100A	0185100.X	185100	0185100.XP	185100BP	0185100.XPA
120A	0185120.X	185120	0185120.XP	185120BP	0185120.XPA
150A	---	---	0185150.XP	185150BP	0185150.XPA

Mini Type I Circuit Breakers

Designed to fit in a MINI blade fuse block or panel. Conforms to SAE J553. Cycles or continuously resets until the fault is corrected. Type I circuit breakers are typically used to protect circuits which occasionally experience momentary overloads such as wiper motor and headlamp circuits where a self resetting device is preferred.

CURRENT RATING (A)	BOXED		CARDED		
	MATERIAL #	CATALOG #	MATERIAL #	CATALOG #	NEW PACKAGING MATERIAL #
10A	---	---	0211010.XP	211010BP	0211010.XPA
15A	0211015.X	211015	0211015.XP	211015BP	0211015.XPA
20A	0211020.X	211020	0211020.XP	211020BP	0211020.XPA
25A	0211025.X	211025	0211025.XP	211025BP	0211025.XPA
30A	0211030.X	211030	0211030.XP	211030BP	0211030.XPA

MEGA® Bolt-on Fuse

The MEGA® Fuse is designed for high current circuit protection up to 500A with "Diffusion Pill Technology." The MEGA® Fuse also provides time delay characteristics. Designed and patented by Littelfuse, the MEGA® Fuse is ideal for battery and alternator protection application and other heavy gauge cables requiring ultra-high current protection.

MEGA® Fuse

Littelfuse patented device designed for high current protection up to 250 amperes found OEM on Ford, GM and Chrysler vehicles. Slo-Blo® feature eliminates nuisance blowing during temporary, short duration overloads. Commonly used for battery and alternator connections and other heavy gauge cables requiring ultra high current protection.

Voltage Rating Characteristics: 32V AC/DC Slo-Blo

DIMENSIONS

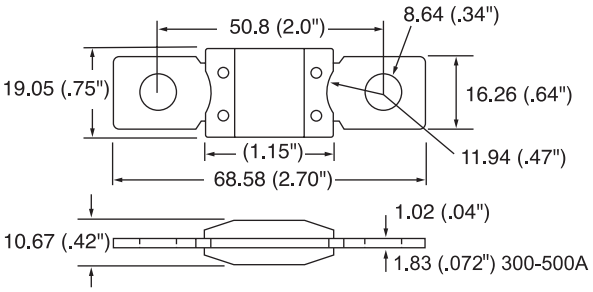

TEMPERATURE RERATING CURVE

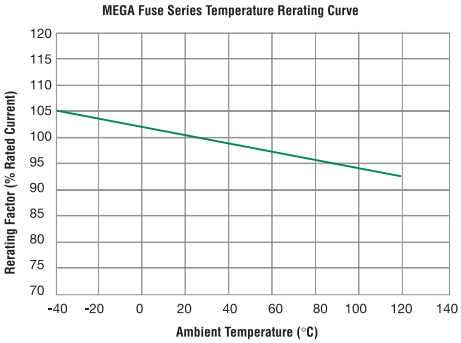

TIME-CURRENT CHARACTERISTICS

% of Rating	Opening Time Min / Max (s)	
	40-250	300-500
75	– / –	14,400 s / –
100	14,400 s / –	– / –
135	120 s / 1800 s	– / –
200	1 s / 15 s	1 s / 15 s
350	0.300 s / 5 s	0.500 s / 5 s
600	0.100 s / 1 s	– / –

TIME-CURRENT CHARACTERISTIC CURVES

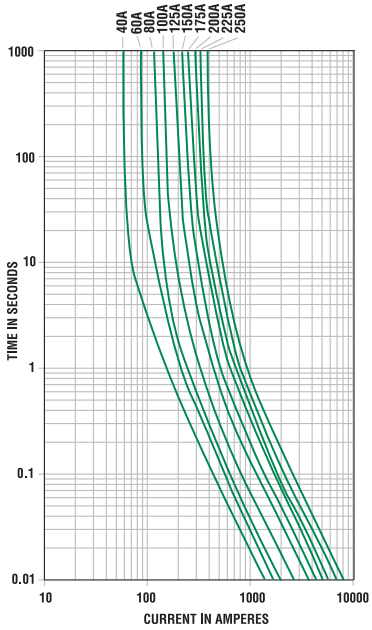

MEGA® FUSE TABLE

CURRENT RATING (A)	BOXED 1PC		BOXED 50PC		CARDED		
	MATERIAL #	CATALOG #	MATERIAL #	CATALOG #	MATERIAL #	CATALOG #	NEW PACKAGING MATERIAL #
80A	0MEG080.X	---	---	---	---	---	0MEG080.XPA
100A	0MEG100.X	MEG100	0MEG100.L	MEG100L	0MEG100.XP	MEG100BP	0MEG100.XPA
125A	0MEG125.X	MEG125	0MEG125.L	MEG125L	0MEG125.XP	MEG125BP	0MEG125.XPA
150A	0MEG150.X	MEG150	0MEG150.L	MEG150L	0MEG150.XP	MEG150BP	0MEG150.XPA
175A	0MEG175.X	MEG175	0MEG175.L	MEG175L	0MEG175.XP	MEG175BP	0MEG175.XPA
200A	0MEG200.X	MEG200	0MEG200.L	MEG200L	0MEG200.XP	MEG200BP	0MEG200.XPA
225A	0MEG225.X	MEG225	0MEG225.L	MEG225L	0MEG225.XP	MEG225BP	0MEG225.XPA
250A	0MEG250.X	MEG250	0MEG250.L	MEG250L	0MEG250.XP	MEG250BP	0MEG250.XPA
300A	0MEG300.X	MEG300	0MEG300.L	MEG300L	---	---	---
350A	0MEG350.X	MEG350	0MEG350.L	MEG350L	---	---	---
400A	0MEG400.X	MEG400	0MEG400.L	MEG400L	---	---	---
450A	0MEG450.X	MEG450	0MEG450.L	MEG450L	---	---	---
500A	0MEG500.X	MEG500	0MEG500.L	MEG500L	---	---	---

©2014 Littelfuse Automotive Aftermarket Circuit Protection

MIDI® Bolt-on Fuse

This MIDI® style fuse offers a bolt-on space saving fuse for high current wiring protection and provides time delay characteristics with "Diffusion Pill Technology". The MIDI® was designed and patented by Littelfuse.

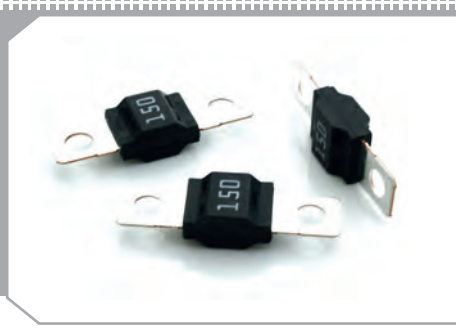

MIDI® Fuse

Littelfuse patented device found OEM on Chrysler and BMW. Slo-Blo® feature elimlnates nuisance blowing during temporary, short duration overloads.

Voltage Rating Characteristics: 32V AC/DC Slo-Blo®

DIMENSIONS

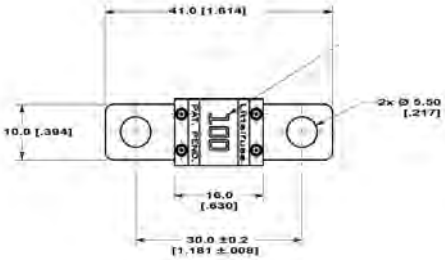

MIDI® FUSE TABLE

NEW!

CURRENT RATING (A)	BOXED		CARDED
	MATERIAL #	CATALOG #	MATERIAL #
50A	0MID050.X	MID50	0MID050.XP
80A	0MID080.X	MID80	0MID080.XP
150A	--	--	0MID150.XP

TEMPERATURE RERATING CURVE

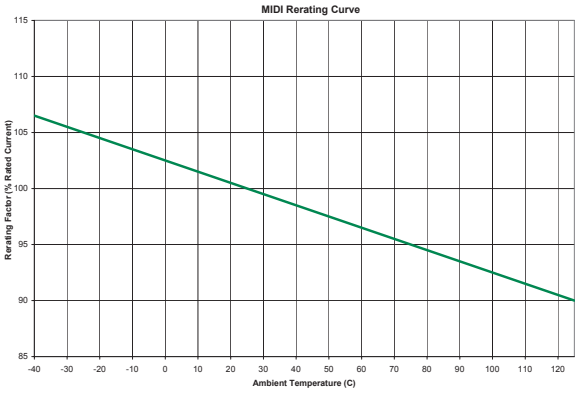

ZCASE Single MEGA Fuse

The Single Zcase is a Minimal Footprint Bolt Down Fuse with a wide rating range up to 250A in the same packaging size.

ZCASE Fuse

The Time Current characteristic is similar to the well known Mega Design and can used as full wire protection until 250A. Higher ratings mostly used for typically Starter Fuse application as a protector fuse. The fuse design is optimized for a one bolt connection M6 (125 A - 250 A) or M8 (300 A - 600 A) and can used directly on a battery post or busbar connection. Littelfuse is offering a complete solution for the necessary stud and different busbar connections including some battery clamps. *See your Littelfuse respresentative for higher amperage (300A-600A) solutions.*

ZCASE FUSE TABLE

NEW!

CURRENT RATING (A)	BULK	CARDED
	MATERIAL #	MATERIAL #
125A	3298125.Z	ZCAS125.XP
150A	3298150.Z	ZCAS150.XP
175A	3298175.Z	ZCAS175.XP
200A	3298200.Z	ZCAS200.XP
225A	3298225.Z	ZCAS225.XP
250A	3298250.Z	ZCAS250.XP

TIME-CURRENT CHARACTERISTICS

% of Rating	Opening Time Min / Max (s)	
	125A - 250A	300A - 600A
50	– / –	14,400 / –
100	14,400 / –	– / –
135	120 / 1800	– / –
200	1 / 15	1 / 40
350	0.300 / 5	0.300 / 5
500	– / –	0.100 / 1 (only for 500A)
600	0.100 / 1	0.100 / 1 (except 600A)

DIMENSIONS

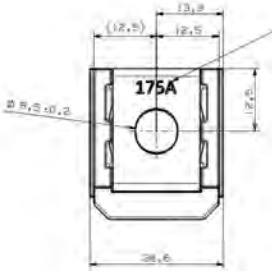

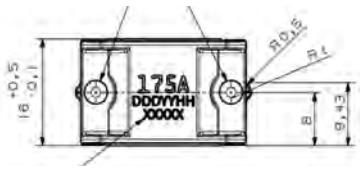

Fuse Block

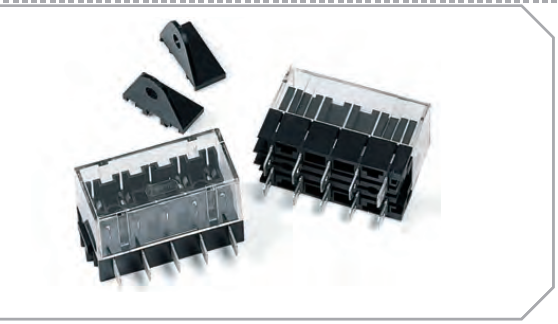

ATO® Fuse Block with 1/4" Quick Connect Terminals

Use with ATO® fuses up to 15 amps. Available in 5 pole unit with removable clear protective cover. Available in side or bottom positioned 1/4" Q.C. terminal configurations. Unit with bottom Q.C. terminals includes detachable side mounting brackets.

TERMINAL STYLE	CARDED		
	MATERIAL #	CATALOG #	NEW PACKAGING MATERIAL #
1/4" Q.C. side position	03500417XP	350417BP	03500417XPA
1/4" Q.C. bottom position (includes mounting brackets)	03500418XP	350418BP	03500418XPA

MAXI Fuse Single Pole High Amp Block

Use with MAXI fuses up to 60 amps. Safe/easy replacement for hard to replace fusible link wire. Perfect for high amp audio applications. Interlocking block feature permits two pole position installation. Contains screw terminals. Optional dust cover available.

BOXED		CARDED		
MATERIAL #	CATALOG #	MATERIAL #	CATALOG #	NEW PACKAGING MATERIAL #
0MAB0001F	MAB1	0MAB0001XP	MAB1BP	0MAB0001XPA

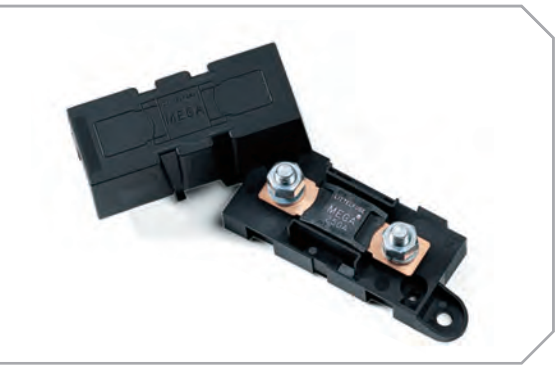

MEGA® Fuse Block

Use with MEGA® fuses up to 250 amps. Ideal for battery and alternator connections and other heavy gauge cables requiring ultra high current protection. Includes protective cover. Features interconnecting pins on side of fuse block for secure multiple block configurations. Includes M8 threaded studs and hex nuts with lock washers. Fuse not included.

BOXED			
70-PC PACK		20-PC PACK	10-PC PACK
MATERIAL #	CATALOG #	MATERIAL #	MATERIAL #
02980900Z	298900	02980900S	02980900TXN

MIDI® Fuse Block

Use with MIDI® fuses up to 100 amps. Includes protective cover. Features interconnecting pins on side of fuse block for secure multiple block configurations. Includes M5 threaded studs and hex nuts with lock washers. Fuse not included.

BOXED	
20-PC PACK	330-PC PACK
MATERIAL #	CATALOG #
04980900S	04980900ZXT

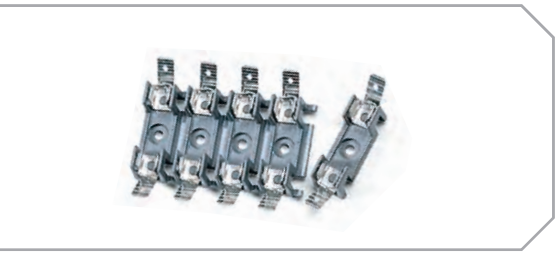

Omni-Blok® Fuseholder

For 1/4" x 1-1/4" glass fuses. Available in one through twelve pole units. Units may be easily broken apart as needed to obtain the desired number of poles. Rated at 20 amps, 300 volts. "354" series is bulk, "OMN" series is carded.

PART NO.	DESC.	PART NO.	DESC.	PART NO.	DESC.
354801-GY	1 Pole	354805-GY	5 Pole	354809-GY	9 Pole
354802-GY	2 Pole	354806-GY	6 Pole	354810-GY	10 Pole
354803-GY	3 Pole	354807-GY	7 Pole	354811-GY	11 Pole
354804-GY	4 Pole	354808-GY	8 Pole	354812-GY	12 Pole

	CARDED		
	MATERIAL #	CATALOG #	NEW PACKAGING MATERIAL #
2 Pole	0OMN0002XP	OMN2	0OMN0002XPA
4 Pole	0OMN0004XP	OMN4	0OMN0004XPA

©2014 Littelfuse Automotive Aftermarket Circuit Protection

Laminated Base Fuse Block with Screw Terminals

For 1/4" x 1-1/4" glass fuses. Available in one through twelve pole units. Rated at 20 amps, 300 volts.

PART NO.	DESC.	PART NO.	DESC.	PART NO.	DESC.
356001	1 Pole	356005	5 Pole	356009	9 Pole
356002	2 Pole	356006	6 Pole	356010	10 Pole
356003	3 Pole	356007	7 Pole	356011	11 Pole
356004	4 Pole	356008	8 Pole	356012	12 Pole

ATO® Add-A-Circuit™ Kit

Allows easy installation of additional circuits without cutting or splicing. Turns one fuse slot into two while providing protection for both circuits. Maintains new car warranty. Use with ATO® Fuses up to 10 amps. Includes ATO 3, 5, 7.5 and 10 amp fuses.

BOXED		CARDED		
MATERIAL #	CATALOG #	MATERIAL #	CATALOG #	NEW PACKAGING MATERIAL #
0FHA0200Z	FHA200	0FHA0200ZP	FHA200BP	0FHA0200ZPA

Caution: Fusetaps are not a recommended alternative for adding circuits because they can overstress the terminals in the fuse block. This situation can create a loose fitting fuse, which in turn produces excessive heat, which can cause nuisance blows, even melting of the fuse and fuse block and possibly an expensive repair in the future. When a fusetap is used, in many cases there is no fuse protecting the new circuit, a condition which can also present a hazard.

MINI® Add-A-Circuit™ Kit

Same as ATO® Add-A-Circuit except for use with MINI® Fuses up to 10 amps. Includes MINI 3, 5, 7.5 and 10 amp fuses.

BOXED		CARDED		
MATERIAL #	CATALOG #	MATERIAL #	CATALOG #	NEW PACKAGING MATERIAL #
0FHM0200Z	FHM200	0FHM0200ZP	FHM200BP	0FHM0200ZPA

LPMINI® Add-A-Circuit™ Kit

Same as ATO® Add-A-Circuit except for use with LPMINI® Fuses up to 10 amps. Includes LPMINI 3, 5, 7.5 and 10 amp fuses.

BOXED	CARDED
MATERIAL #	NEW PACKAGING MATERIAL #
NEW! FHLM0200Z	FHLM0200XPA

MICRO2® Add-A-Circuit™ Kit

Same as ATO® Add-A-Circuit except for use with MICRO2® Fuses up to 10 amps. Includes MICRO2 3, 5, 7.5 and 10 amp fuses.

BOXED	CARDED
MATERIAL #	NEW PACKAGING MATERIAL #
NEW! FHM20200Z	FHM20200ZPA

Battery Power Feed Kit

Attaches directly to battery terminal. Allows the addition of up to 3 circuits. Includes MINI® Fuse In-line Fuseholder with protective cap. Also can be used as a frame ground. Constructed of durable brass for optimal conductivity.

CARDED		
MATERIAL #	CATALOG #	NEW PACKAGING MATERIAL #
0BPF0001ZP	BPF1BP	0BPF0001ZPA

Fuseholders

MINI® Fuse In-line Fuseholder with Protective Cap

Use with MINI® Fuse 2 to 20 amps. Supplied with two 4" wire leads of 14 gauge black wire. Includes protective cover for harsh environment. FHM1BP

MINI® Fuse Heavy Duty In-Line Fuseholder with Protective Cap

Use with MINI® Fuse 25 and 30 amp fuses. Supplied with two 4" wire leads of 12 gauge orange wire. Includes protective cover for harsh environment. FHM2BP

CARDED			SMART GLOW CARDED		
MATERIAL #	CATALOG #	NEW PACKAGING MATERIAL #	MATERIAL #	CATALOG #	NEW PACKAGING MATERIAL #
0FHM0001XP	FHM1BP	0FHM0001XPA	0FHM0001XPGLO	20-1020	0FHM0001XPGLOA
0FHM0002XP	FHM2BP	0FHM0002XPA	---	---	---

ATO® Fuse In-line Fuseholder with Protective Cap

Use with ATO® Fuse 1 to 20 amps. Supplied with two 4" wire leads of 16 gauge black wire. Includes protective cover for harsh environment. FHAC1BP

ATO® Fuse Heavy Duty In-Line Fuseholder with Protective Cap

Use with ATO® 25 and 30 amp fuses for air conditioner or other heavy duty applications. Supplied with two 4" wire leads of 12 gauge orange wire. Includes protective cover for harsh environment. FHAC2BP

CARDED		
MATERIAL #	CATALOG #	NEW PACKAGING MATERIAL #
FHAC0001XP	FHAC1BP	FHAC0001XPA
FHAC0002XP	FHAC2BP	FHAC0002XPA

ATO® Fuse In-line Fuseholder

Use with ATO® Fuse 1 to 20 amps. Supplied with two 4" wire leads of 16 gauge black wire. FHA1BP

ATO® Fuse Heavy Duty In-Line Fuseholder

Use with ATO® 25 and 30 amp fuses for air conditioner or other heavy duty applications. Supplied with two 4" wire leads of 12 gauge orange wire.
FHA2BP, FHA30BP includes 30 amp fuse.

BOXED		CARDED			SMART GLOW CARDED		
MATERIAL #	CATALOG #	MATERIAL #	CATALOG #	NEW PACKAGING MATERIAL #	MATERIAL #	CATALOG #	NEW PACKAGING MATERIAL #
---	---	0FHA0001XP	FHA1BP	0FHA0001XPA	0FHA0001XPGLO	20-1010	0FHA0001XPGLOA
---	---	0FHA0002XP	FHA2BP	0FHA0002XPA			
0FHA0030Z	FHA30	0FHA0030XP	FHA30BP	0FHA0030XPA			

ATO® Fuse In-line Panel Mount Fuseholder

Versatile fuseholder for in-line or snap mount panel applications. Interlock body design allows fuseholders to be snapped together. Use with ATO® Fuse 1 to 20 amps. Supplied with 8" loop of 14 gauge black wire. AFH1BP

ATO® Fuse Heavy Duty In-line Panel Mount Fuseholder

Use with ATO® Fuse 25 and 30 amp fuses. Same as AFH 1 except supplied with 8" loop of 10 gauge orange wire. AFH2BP

CARDED		
MATERIAL #	CATALOG #	NEW PACKAGING MATERIAL #
0AFH0001XP	AFH1BP	0AFH0001XPA
0AFH0002XP	AFH2BP	0AFH0002XPA

©2014 Littelfuse Automotive Aftermarket Circuit Protection

MAXI Fuse In-line Fuseholder with Protective Cap

Use with MAXI Fuse up to 60 amps. Supplied with two 6" wire leads of 6 gauge black wire. Includes protective cover for harsh environment and mounting hole for easy firewall installation.

BOXED	
MATERIAL #	CATALOG #
MAHC0001ZXJ	MAH1

Universal Glass Bayonet Knob In-line Fuseholder

Constructed of tough black thermoset (UL94V0). Includes 3 springs for various fuse sizes and spring-locked, bayonet type knob. Supplied with 15" loop of 14 gauge red wire. Use with Glass SFE 71/2, 9, 14, 20, AGA, AGC, AGW and AGX Fuses up to 20 amps when proper spring is installed.

BOXED	
MATERIAL #	CATALOG #
0FHP0001Z	FHP1

Universal Glass Twist-Lock In-line Fuseholder

Constructed of weather resistant nylon. Simple “twist-lock” allows easy fuse removal and replacement. Supplied with 8" loop of 14 gauge black wire and one spring. Use with Glass SFE 4, 6, 71/2, 9, 14, 20, AGA, AGC, AGW and AGX Fuses up to 20 amps.

CARDED		
MATERIAL #	CATALOG #	NEW PACKAGING MATERIAL #
0FNY0001XP	FNY1BP	0FNY0001XPA

Glass Fuse Heavy Duty 30 Amp In-line Fuseholder

Spring loaded heavy duty glass fuseholder includes AGC 30 amp fuse for GM air conditioner, heater blower motors or other heavy duty applications. Supplied with two 4" wire leads of 12 gauge orange wire.
FNY20BP includes 20A AGC Fuse.

CARDED		
MATERIAL #	CATALOG #	NEW PACKAGING MATERIAL #
0FNY0020XP	FNY20BP	0FNY0020XPA
0FNY0030XP	FNY30BP	0FNY0030XPA

3AG Shock-Safe Panel Fuseholders

Designed to eliminate the possibility of electrical shock, as defined in IEC standards 65 and 257. Shock-Safe fuseholders feature a low profile body, fingergrip knob and anti-tease feature that eliminates circuit interruption when knob is accidentally depressed.

Voltage Rating: 250V.
Approvals: UL listed and CSA Certified. Recognized under the Components Program of UL.

CARDED	NEW PACKAGING MATERIAL #	VOLTAGE RATING	DESCRIPTION
03453LF2XP	03453LF2XPA	20A	with 1/4" straight NEMA/DIN Quick Connect Terminal
03453LF8XP	03453LF8XPA	20A	with 3/16" straight dual purpose solder terminal

Anti-Theft Battery Master Switch

- Available in two versions, Fused and Detachable.
- Fused version maintains current to all electrical circuits such as the alarm, on-board computer, central locking system and radio memory presets.
- Detachable version features a special disconnect that allows the battery to easily be removed for anti-theft protection. Perfect for seasonal storage needs or easy off vehicle battery charging for Autos, Motorcycles, RV's, Boats, etc.
- Generate sales with the lowest cost anti-theft devices available on the market today.
- A simple turn of the knob isolates the battery and renders the vehicle unstartable.
- Makes anti-theft protection affordable when compared to expensive alarm systems.
- Eliminates complicated installation — no special electrical or mechanical expertise required.
- Fits all standard Top Mount Post batteries. Can be used with Side Mount Post batteries by using a Top Mount Adapter Post (not included).
- Works on 12 to 24 volt systems up to 135 amperes.

CARDED			DESCRIPTION
MATERIAL #	CATALOG #	NEW PACKAGING MATERIAL #	
0ATD0200XBP	ATD200BP	0ATD0200XBPA	Anti-theft Battery Master Swtich – Detachable
0ATD0300ZBP	ATD300BP	0ATD0300ZBPA	Anti-theft Battery Master Switch – Fused

 ©2014 Littelfuse Automotive Aftermarket Circuit Protection

Fuse Tester and Puller

Conveniently and easily tests ATO® and MINI® blade fuses either in or out of the fuse block, with or without vehicle battery power. Indicator light on tester glows bright green when fuse is good. Fuse puller end allows for easy fuse removal and replacement. 24V maximum.

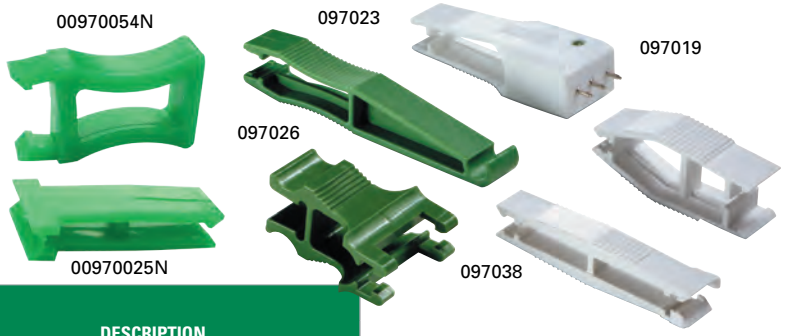

Fuse Pullers

Fuse puller allows for easy fuse removal and replacement.

BOXED		CARDED			DESCRIPTION
MATERIAL #	CATALOG #	MATERIAL #	CATALOG #	NEW PACKAGING MATERIAL #	
00970019X	097019	00970019XP	097019BP	00970019XPA	For ATO® & MINI® Fuses
00970023Z	097023	00970023XP	097023BP	00970023XPA	Tri-Puller™ – for Glass Fuses, Ceramic Type Fuses, ATO® and MINI® Blade Fuses
00970026N	097026	00970026XP	097026BP	00970026XPA	For MAXI Blade Fuses
---	---	00970035XP	---	00970035XPA	
00970038Z	097038	00970038XP	---	00970038XPA	For ATO® and MINI® Fuses
---	---	00970053XP	---	00970053XPA	For JCASE® Fuses
00970025N	---	---	---	00970025XPA	For Micro2 / Micro3 Fuses
00970054N	---	---	---	00970054XPA	For MCase Fuses

NEW!
NEW!

CNL/CNN Fuse

CNL / CNN Fuses

CNL fast-acting and CNN very fast-acting fuses are recommended for use on battery operated lift trucks and other low voltage battery operated equipment. Part No. example: CNN 700.

Voltage Rating: CNL: 32V DC
CNN: 48V DC, 75V AC
Interrupting Rating: 2,500 amperes
Ampere Range: 10-800 degrees
Maximum Torque: 90 lbs.

MATERIAL #	CATALOG #	MATERIAL #	CATALOG #
0CNL035.V	CNL035	0CNN010.V	CNN010
0CNL040.V	CNL040	0CNN035.V	CNN035
0CNL050.V	CNL050	0CNN040.V	CNN040
0CNL060.V	CNL060	0CNN050.V	CNN050
0CNL080.V	CNL080	0CNN060.V	CNN060
0CNL100.V	CNL100	0CNN080.V	CNN080
0CNL125.V	CNL125	0CNN090.V	CNN090
0CNL150.V	CNL150	0CNN100.V	CNN100
0CNL175.V	CNL175	0CNN125.V	CNN125
0CNL200.V	CNL200	0CNN150.V	CNN150
0CNL250.V	CNL250	0CNN175.V	CNN175
0CNL275.V	CNL275	0CNN200.V	CNN200
0CNL300.V	CNL300	0CNN225.V	CNN225
0CNL325.V	CNL325	0CNN250.V	CNN250
0CNL350.V	CNL350	0CNN275.V	CNN275
0CNL400.V	CNL400	0CNN300.V	CNN300
0CNL500.V	CNL500	0CNN325.V	CNN325
---	---	0CNN350.V	CNN350
---	---	0CNN400.V	CNN400
---	---	0CNN500.V	CNN500
---	---	0CNN600.V	CNN600
---	---	0CNN700.V	CNN700
---	---	0CNN800.V	CNN800

Fusible Links

Honda Fusible Links

Original equipment replacement fusible link bar for Honda Civics. Available in 45, 55 and 65 amp fuse bars. Carded merchandise only available in 3 piece assortment 094413.

Fusible Links

Original equipment replacement fusible link bar.
Available in 30, 50, 80 and 100 amp fuse bars.

CARDED			DESCRIPTION
MATERIAL #	CATALOG #	NEW PACKAGING MATERIAL #	
00940413ZP	094413	00940413ZPA	ASST Honda Fusible Link Assortment
0FLC014.XP	FLC14BP	0FLC014.XPA	Fusible Link 14 AWG
0FLW014.XP	FLW14BP	0FLW014.XPA	Fusible Link 14 AWG with Terminals
0FLW016.XP	FLW16BP	0FLW016.XPA	Fusible Link 16 AWG with Terminals

20
21

Commercial Assortments

Littelfuse Assortments cover all of the professional technician's circuit protection needs. Littelfuse offers the most comprehensive circuit protection kits on the market today addressing the needs of the Professional Service Center and Road Service Operation with genuine Littelfuse OEM fuses. Littelfuse Commercial Assortments are designed for the professional installer who needs a larger quantity and variety of fuses at the point of installation. Assortments are packaged in tough plastic storage containers perfect for the parts drawer, tool box, under counter or road service vehicle.

ATO® Fuse
80 Piece Commercial Assortment

CARDED	MATERIAL #	CATALOG #	CONTENT
	00940409Z	094409	(10) ATO 3 (10) ATO 5 (10) ATO 7.5 (10) ATO 10 (10) ATO 15 (10) ATO 20 (10) ATO 25 (10) ATO 30

ATO® / MINI® Fuse
80 Piece Commercial Assortment

CARDED	MATERIAL #	CATALOG #	CONTENT
	00940422Z	094422	(10) ATO 15 (10) ATO 20 (10) ATO 25 (10) ATO 30 (10) MINI 15 (10) MINI 20 (10) MINI 25 (10) MINI 30 (1) Puller

MINI® Fuse
80 Piece Commercial Assortment

CARDED	MATERIAL #	CATALOG #	CONTENT
	00940551Z	094551	(10) MINI 3 (10) MINI 5 (10) MINI 7.5 (10) MINI 10 (10) MINI 15 (10) MINI 20 (10) MINI 25 (10) MINI 30

Low Profile MINI® Fuse
80 Piece Commercial Assortment

CARDED	MATERIAL #	CATALOG #	CONTENT
	00940552Z	094552	(10) LPMINI 3 (10) LPMINI 5 (10) LPMINI 7.5 (10) LPMINI 10 (10) LPMINI 15 (10) LPMINI 20 (10) LPMINI 25 (10) LPMINI 30

JCASE® Fuse
14 Piece Commercial Assortment

CARDED	MATERIAL #	CATALOG #	CONTENT
	00940480Z	094480	(4) JCASE 20 (4) JCASE 30 (4) JCASE 40 (1) JCASE 50 (1) JCASE 60 (1) PULLER

MICRO2™ Fuse
70 Piece Commercial Assortment

CARDED	MATERIAL #	CATALOG #	CONTENT
	00940560ZXA	00940560	(10) MICRO2 5 (10) LPMINI 20 (10) MICRO2 7.5 (10) LPMINI 25 (10) LPMINI 10 (10) LPMINI 30 (10) LPMINI 15

MICRO2™, MICRO3™, MCASE® Fuse
135 Piece Commercial Assortment

CARDED	MATERIAL #	CATALOG #	CONTENT
	00940570ZXA	00940570	(10) MICRO2, MICRO3 5 (10) MICRO 30 (10) MICRO2, MICRO3 7.5 (5) MCASE 15 (10) MICRO2, MICRO3 10 (5) MCASE 20 (10) MICRO2, MICRO3 15 (5) MCASE 25 (10) MICRO 20 (5) MCASE 30 (10) MICRO 25 (5) MCASE 40

MCASE® Fuse
80 Piece Commercial Assortment

CARDED	MATERIAL #	CATALOG #	CONTENT
	00940565ZXA	00940565	(10) MCASE 20 (10) MCASE 25 (10) MCASE 30 (10) MCASE 40

Low Profile JCASE® Fuse
16 Piece Commercial Assortment

CARDED	MATERIAL #	CATALOG #	CONTENT
	00940553Z	094553	(4) LPJCASE 20 (4) LPJCASE 30 (4) LPJCASE 40 (1) LPJCASE 50 (1) LPJCASE 60 (1) PULLER

©2014 Littelfuse Automotive Aftermarket Circuit Protection

SMART GLOW Fuse®

It glows when it blows.

Smart Glow ATO® Blade Fuse
80 Piece Commercial Assortment

CARDED	MATERIAL #	NEW PACKAGING MATERIAL #	CONTENT
	00940509ZXGLO	00940509ZXGLOA	(10) ATO 3 (10) ATO 5 (10) ATO 7.5 (10) ATO 10 (10) ATO 15 (10) ATO 20 (10) ATO 25 (10) ATO 30

Smart Glow MINI® Blade Fuse
80 Piece Commercial Assortment

CARDED	MATERIAL #	NEW PACKAGING MATERIAL #	CONTENT
	00940510ZXGLO	00940510ZXGLOA	(10) ATO 3 (10) ATO 5 (10) ATO 7.5 (10) ATO 10 (10) ATO 15 (10) ATO 20 (10) ATO 25 (10) ATO 30

Caddys

Professional Fuse Caddy

Provides a complete assortment designed to meet the professional installer's on-the-road fuse needs. Contains 180 of the most popular fuses and installation tools (includes ATO®/MINI® Tester/ Puller) needed to service passenger cars and light trucks, heavy and medium trucks and buses.

Comes in compact handy storage box perfect for the on-the-road vehicle.

CARDED	MATERIAL #	CATALOG #	NEW PACKAGING MATERIAL #	CONTENT
	00940396Z	094396	00940396ZXA	(5) ATO 3 (5) ATO 5 (5) ATO7.5 (10) ATO 10 (15) ATO 15 (15) ATO 20 (10) ATO 25 (15) ATO 30 (5) MIN 2 (5) MIN 3 (5) MIN 4 (5) MIN 5 5) MIN 7.5 (5) MIN 10 (5) MIN 15 (5) MIN 20 (5) MIN 25 (5) MIN 30 (5) AGC 5 (5) AGC 10 (5) AGC 15 (5) AGC 20 (5) AGC 25 (5) AGC 30 (5) SFE 14 (5) SFE20 (5) SFE 30 (1) MAX 20 (1) MAX 30 (1) MAX 40 (1) MAX 50 (1) MAX 60 (1) Fuse Tester and Puller (1) Tri-puller™ (1) MAXI Fuse Puller

Red Box

Designed by Littelfuse®, it features the exact OEM parts used for the glass, ATO®, MINI®, MAXI, PAL, JCase® and the new low profile MINI® fuses installed on over 98% of the cars, vans, light trucks and SUV's on the road today. All come packed inside one compact, portable, organized carrying case. With Red Box™ your days of wasting valuable shelf space on redundant part numbers is over. Over 500 fuses inside Red Box™ meet over 98% of the market's circuit protection needs, giving you more coverage and more profit with a lot less inventory.

Glass Module

MATERIAL #	CATALOG #	
0RBOX005Z	RBOX5	
0AGC001.V	AGC GLASS BOX 1A	10
0AGC002.V	AGC GLASS BOX 2A	10
0AGC003.V	AGC GLASS BOX 3A	10
0AGC004.V	AGC GLASS BOX 4A	10
0AGC005.V	AGC GLASS BOX 5A	10
0AGC006.V	AGC GLASS BOX 6A	10
0AGC007.5V	AGC GLASS BOX 7.5A	10
0AGC010.V	AGC GLASS BOX 10A	10
0AGC015.V	AGC GLASS BOX 15A	10
0AGC020.V	AGC GLASS BOX 20A	10
0AGC025.V	AGC GLASS BOX 25A	10
0AGC030.V	AGC GLASS BOX 30A	10
0AGW030.V	AGW GLASS BOX 30A	10
0AGX030.V	AGX GLASS BOX 30A	10
0SFE004.V	SFE GLASS BOX 4A	10
0SFE009.V	SFE GLASS BOX 9A	10
0SFE014.V	SFE GLASS BOX 14A	10
0SFE020.V	SFE GLASS BOX 20A	10
0SFE030.V	SFE GLASS BOX 30A	10
	Puller Tester	1

NEW! Micro2, Micro3, MCase®, LPJCASE Module

MATERIAL #		
0RBOX006Z		
MIC2005.V	MICRO2 Fuse 5A	10
MIC207.5V	MICRO2 Fuse 7.5A	10
MIC2010.V	MICRO2 Fuse 10A	10
MIC2015.V	MICRO2 Fuse 15A	10
MIC2020.V	MICRO2 Fuse 20A	10
MIC2025.V	MICRO2 Fuse 25A	10
MIC3005.V	MICRO3 Fuse 5A	10
MIC307.5V	MICRO3 Fuse 7.5A	10
MIC3010.V	MICRO3 Fuse 10A	10
MCAS020.V	MCASE Fuse 20A	10
MCAS025.V	MCASE Fuse 25A	10
MCAS030.V	MCASE Fuse 30A	10
MCAS040.V	MCASE Fuse 40A	10
LJCA020.V	LOW PROFILE JCASE 20A	10
LJCA025.V	LOW PROFILE JCASE 25A	10
LJCA030.V	LOW PROFILE JCASE 30A	10
LJCA040.V	LOW PROFILE JCASE 40A	10
LJCA050.V	LOW PROFILE JCASE 50A	10
LJCA060.V	LOW PROFILE JCASE 60A	10

KIT Professional Installer Case

MATERIAL #	CATALOG #
0RED0BOXZ	REDBOX

Low Profile MINI® Module

MATERIAL #	CATALOG #	
0RBOX001Z	RBOX1	
LMIN005.V	5A LOW PROFILE MINI FUSE	5
LMIN07.5V	7.5A LOW PROFILE MINI FUSE	10
LMIN010.V	10A LOW PROFILE MINI FUSE	10
LMIN015.V	15A LOW PROFILE MINI FUSE	10
LMIN020.V	20A LOW PROFILE MINI FUSE	5
LMIN025.V	25A LOW PROFILE MINI FUSE	5
LMIN030.V	30A LOW PROFILE MINI FUSE	10
00970038Z	ATO/MINI PULLER (WHITE)	1

Blade Fuse Module

MATERIAL #	CATALOG #	
0RBOX003Z	RBOX3	
0ATO005.V	ATO BLADE FUSE BOX 5A	10
0ATO07.5V	ATO BLADE FUSE BOX 7.5A	10
0ATO010.V	ATO BLADE FUSE BOX 10A	25
0ATO015.V	ATO BLADE FUSE BOX 15A	25
0ATO020.V	ATO BLADE FUSE BOX 20A	25
0ATO025.V	ATO BLADE FUSE BOX 25A	25
0ATO030.V	ATO BLADE FUSE BOX 30A	25
0ATO040.V	ATO BLADE FUSE BOX 40A	10
0MIN005.V	MINI BLADE FUSE BOX 5A	10
0MIN07.5V	MINI BLADE FUSE BOX 7.5A	10
0MIN010.V	MINI BLADE FUSE BOX 10A	20
0MIN015.V	MINI BLADE FUSE BOX 15A	20
0MIN020.V	MINI BLADE FUSE BOX 20A	20
0MIN025.V	MINI BLADE FUSE BOX 25A	10
0MIN030.V	MINI BLADE FUSE BOX 30A	10
0MAX020.V	MAXI BLADE BOX 20A	2
0MAX030.V	MAXI BLADE BOX 30A	2
0MAX040.V	MAXI BLADE BOX 40A	2
0MAX050.V	MAXI BLADE BOX 50A	2
0MAX060.V	MAXI BLADE BOX 60A	2
0MAX070.V	MAXI BLADE BOX 70A	1
0MAX080.V	MAXI BLADE BOX 80A	1
00970019X	FUSE TESTER AND PULLER BOX	1
00970038Z	ATO/MINI PULLER (WHITE)	1
00970026N	MAXIFUSE PULLER BOX	1
FHAC0002Z	ATO HD INLINE FUSEHOLDER BOX	1
0FHM0002Z	MINI HD INLINE FUSEHOLDER BOX	1

NEW! KIT Professional Installer Case (no Glass with Module 6)

MATERIAL #
0RED0BOXZXNGA

KIT Professional Installer Case (no Glass)

MATERIAL #	CATALOG #
0RED0BOXZXNG	REDBOXNG

JCase® Module

MATERIAL #		CATALOG #
0RBOX002Z	0RBOX002ZXA	RBOX2
JCAS020.V	JCASE 32V S/B BOX 20A	2
JCAS030.V	JCASE 32V S/B BOX 30A	2
JCAS040.V	JCASE 32V S/B BOX 40A	2
JCAS050.V	JCASE 32V S/B BOX 50A	2
JCAS060.V	JCASE 32V S/B BOX 60A	2
00970053Z	JCASE PULLER	1

PAL Module

MATERIAL #	CATALOG #	
0RBOX004Z	RBOX4	
0PAL020.X	FEMALE TERM BOX 20A	1
0PAL030.X	FEMALE TERM BOX 30A	1
0PAL040.X	FEMALE TERM BOX 40A	1
0PAL050.X	FEMALE TERM BOX 50A	1
0PAL060.X	FEMALE TERM BOX 60A	1
0PAL130.X	STRAIGHT MALE TERM BOX 30A	1
0PAL160.X	STRAIGHT MALE TERM BOX 60A	1
0PAL180.X	STRAIGHT MALE TERM BOX 80A	1
0PAL1100.X	STRAIGHT MALE TERM BOX 100A	1
0PAL1120.X	STRAIGHT MALE TERM BOX 120A	1
0PAL230.X	13/16" BENT MALE TERM BOX 30A	1
0PAL240.X	13/16" BENT MALE TERM BOX 40A	1
0PAL250.X	13/16" BENT MALE TERM BOX 50A	1
0PAL260.X	13/16" BENT MALE TERM BOX 60A	1
0PAL270.X	13/16" BENT MALE TERM BOX 70A	1
0PAL280.X	13/16" BENT MALE TERM BOX 80A	1
0PAL2100.X	13/16" BENT MALE TERM BOX 100A	1
0PAL2120.X	13/16" BENT MALE TERM BOX 120A	1
0PAL330.X	MINI FEMALE TERM BOX 30A	1
0PAL340.X	MINI FEMALE TERM BOX 40A	1
0PAL430.X	9/16" BENT MALE TERM BOX 30A	1
0PAL440.X	9/16" BENT MALE TERM BOX 40A	1
0PAL450.X	9/16" BENT MALE TERM BOX 50A	1
0PAL480.X	9/16" BENT MALE TERM BOX 80A	1
0PAL4100.X	9/16" BENT MALE TERM BOX 100A	1
0PAL525.X	LOCKING FEMALE TERM BOX 25A	1
0PAL530.X	LOCKING FEMALE TERM BOX 30A	1

©2014 Littelfuse Automotive Aftermarket Circuit Protection

Value Pack Kits

The Littelfuse Value Packs contain a complete assortment of OEM fuses. Value Packs give you the tools for the protection you need — when and where you need it!
The Ultimate fuse kit for home and shop comes in a clear plastic, reusable package.

MATERIAL #	CATALOG #	NEW PACKAGING MATERIAL #	DESCRIPTION
00940400Z	094400	00940400ZXA	ATO® Super Value Pack 40
00940462Z	094462	00940462ZXA	MINI® Super Value Pack 40
00940475Z	094475	00940475ZXA	ATO®, MINI®, MAXI Super Value Pack 21
00940550Z	094550	00940550ZXA	MINI®/JCASE® Super Value Pack
00940554Z	---	00940554ZXA	Low Profile MINI® / Low Profile JCASE® Super Value Pack 30
---	---	00940557ZXA	AGC Glass Super Value Pack 40

Fuse Assortment Kits

Littelfuse assortments contain a variety of a type of fuse for your specific needs.

MATERIAL #	CATALOG #	NEW PACKAGING MATERIAL #	DESCRIPTION	CONTENTS
00940133ZP	094133	00940133ZPA	European Fuse Assortment	2 each: GBC 8A, 16A Fuses & 1 each: GBC 25 A
00940134ZP	094134	00940134ZPA	British Fuse Assortment	1 each: AGC 7.5A, 15A, 20A (SFE 20) 1 each: 03000128M Amp Fuses
00940135ZP	094135	00940135ZPA	Japanese Fuse Assortment	1 each: AGC 5A, 10A, 15A, 20A (SFE 20), 30A Fuses
00940301ZP	094301	00940301ZPA	Japanese ATO Fuse Assortment	1 each: ATO 5A, 7.5A, 10A, 15A, 20A Fuses
00940154ZP	094154	00940154ZPA	American Fuse Assortment	1 each: AGC 10A, 15A, 30A & 1 each: SFE 9A, 14A, 20A Fuses
00940189ZP	094189	00940189ZPA	Cellular Fuse Assortment	1 each: AGC 1.5A, 3A Fuses & 3 each: AGC 2A Fuses
00940408ZP	094408	00940408ZPA	Computer Fuse Assortment	1 each: AGC .5A Fuses & 2 each: AGC 1A, 2A Fuses
00940412ZP	094412	00940412ZPA	Electric Fence Assortment	5 each: AGC 1A Fuses
00940202ZP	094202	00940202ZPA	ATO Fuse Assortment 6pc	1 each: ATO 5A, 10A, 15A, 20A, 25A, 30A Fuses
00940416Z	094416	---	ATO Fuse Assortment (boxed only)	1 each: ATO 10A, 15A, 20A, 25A, 30A Fuses
00940362ZP	094362	00940362ZPA	Mini Fuse Assortment	1 each: MINI 3A, 5A, 7.5A, 10A, 15A, 20A, 25A, 30A
00940500Z	094500	---	Mini Fuse Assortment (boxed only)	1 each: MINI 10A, 15A, 20A, 25A, 30A Fuses
00940506ZP	094506	00940506ZPA	Low Profile Mini Fuse Assortment	1 each: LMIN 7.5A, 10A, 15A, 20A, 25A, 30A Fuses
0AGA0001ZP	AGA1ZP	0AGA0001ZPA	AGA Glass Fuse Assortment	1 each: AGA 1A, 2A, 3A, 5A, 7.5A, 10A, 15A, 20A, 25A, 30A Fuses
0AGC0001ZP	AGC1ZP	0AGC0001ZPA	AGC Glass Fuse Assortment	1 each: AGC 1A, 2A, 2.5A, 3A, 4A, 5A, 6A, 7.5A, 8A, 10A, 15A, 20A, 25A, 30A, 35A Fuses
0AGW0001ZP	AGW1ZP	0AGW0001ZPA	AGW/AGX Glass Fuse Assortment	1 each: AGW 3A, 4A, 5A, 15A, 20A, 30A Fuses 1 each: AGX 3A, 20A, 25A, 30A Fuses
0SFE0001ZP	SFE1ZP	0SFE0001ZPA	SFE Glass Fuse Assortment	1 each: SFE 4A, 6A, 7.5A, 9A Fuses & 2 each: 14A, 20A, 30A Fuses
---	---	00940558ZPA	Micro2 Fuse Assortment	1 each: Micro2 5A, 10A, 15A, 20A, 25A Fuses
---	---	00940559ZPA	MCase Fuse Assortment	1 each: 15A, 20A, 25A, 30A, 40A Fuses

Smart Glow

MATERIAL #	CATALOG #	NEW PACKAGING MATERIAL #	DESCRIPTION	CONTENTS
00940202ZPGLO	10-1008	00940202ZPGLOA	ATO SmartGlow Assortment 5 PK	1 each: ATO 10A, 15A, 20A, 25A, 30A Fuses
00940362ZPGLO	11-1008	00940362ZPGLOA	Mini SmartGlow Assortment 5 PK	1 each: MINI 10A, 15A, 20A, 25A, 30A Fuses
00940400ZGLO	14-0000	00940400ZXGLOA	ATO SmartGlow Assortment 42 PK	7 each: ATO GLO 5A, 10A, 15A, 20A, 25A, 30A Fuses
00940462ZGLO	15-0000	00940462ZGLOA	Mini SmartGlow Assortment 36 PK	6 each: MINI GLO 5A, 10A, 15A, 20A, 25A, 30A Fuses
00940555ZPGLO	---	00940555ZPGLOA	ATO SmartGlow Assortment 5 PK w/ Flashlight	1 each: ATO GLO 10A, 15A, 20A, 25A, 30A Fuses & (1) MINI Keychain LED Flashlight
00940556ZPDSGLO	094556DSGLO	00940556ZPDSGLOA	Mini SmartGlow Assortment 5 PK Display Strip	1 each: Perforated Display Strip, S Hook 1 each: MINI GLO 10A, 15A, 20A, 25A, 30A Fuses & (1) MINI Keychain LED Flashlight
00940556ZPGLO	094556	00940556ZPGLOA	Mini SmartGlow Assortment 5 PK w/ Flashlight	1 each: MINI GLO 10A, 15A, 20A, 25A, 30A Fuses & (1) MINI Keychain LED Flashlight
0AGC0001ZPGLO	16-1008	0AGC0001ZPGLOA	AGC Glass Assortment 5 PK	1 each: AGC 5A, 10A, 15A, 20A, 30A Fuses
0SFE0001ZPGLO	---	0SFE0001ZPGLOA	SFE Glass SmartGlow Fuse Assortment 5 PK	1 each: SFE 7.5A, 9A, 14A & 2 each: 20A Fuses

©2014 Littelfuse Automotive Aftermarket Circuit Protection

Modular Rack Systems

The new MRS Modular Rack System is a flexible offering of fuses that can ordered based on your needs. Each rack is sold individually and can be locked together to sit on a counter, or wall mounted. They are also available as a complete kit. Size charts, and color identification charts are included to serve as a guide for easy identification and replacement.

0MRS0001ZXA
ATO:

(5) ATO1
(5) ATO2
(5) ATO3
(5) ATO4
(10) ATO5
(10) ATO7.5
(15) ATO10
(15) ATO15
(20) ATO20
(10) ATO25
(15) ATO30
(5) ATO40

0MRS0002ZXA
MINI/MAXI:

(5) MIN2
(5) MIN3
(5) MIN4
(10) MIN5
(10) MIN7.5
(15) MIN10
(20) MIN15
(20) MIN20
(15) MIN25
(15) MIN30
(2) MAX20
(3) MAX30
(2) MAX40
(2) MAX50
(3) MAX60

0MRS0003ZXA
GLASS/CERAMIC:

(5) AGC1	(5) AGW20
(5) AGC2	(10) SFE4
(10) AGC3	(10) SFE7.5
(5) AGC5	(10) SFE9
(5) AGC7.5	(10) SFE14
(10) AGC10	(30) SFE20
(20) AGC15	(10) SFE30
(20) AGC20	(10) GBC8
(10) AGC25	(10) GBC16
(30) AGC30	(10) GBC25
(5) AGW15	

0MRS0004ZXA
PAL/MEGA:

(2) PAL20
(4) PAL30
(3) PAL40
(3) PAL50
(2) PAL60
(1) PAL130
(2) PAL160
(3) PAL180
(2) PAL1100
(2) MEG 175

0MRS0005ZXA
PAL/JCASE:

(1) PAL1120	(1) PAL340
(1) PAL230	(1) PAL430
(1) PAL240	(1) PAL440
(1) PAL250	(1) PAL450
(1) PAL260	(1) PAL480
(1) PAL270	(1) PAL4100
(1) PAL280	(1) PAL525
(1) PAL2100	(1) PAL530
(1) PAL2120	(1) JCAS40
(1) JCAS20	(1) JCAS50
(2) JCAS30	(1) JCAS60
(1) PAL330	

0MRS0006ZXA
ATO/MINI ASST'S:

(12) 094202B
(12) 094362B

0MRS0009ZXA
MICRO2/MICRO3/MCASE:

MIC2 5	MIC3 7.5
MIC2 7.5	MIC3 10
MIC2 10	MIC3 15
MIC2 15	MCAS 15
MIC2 20	MCAS 20
MIC2 25	MCAS 25
MIC2 30A	MCAS 30
MIC3 5	MCAS 40

MRS3E

0MRS0007ZXA

©2014 Littelfuse Automotive Aftermarket Circuit Protection

MODULAR RACK TABLE

BOXED		DESCRIPTION	CONTENTS
MATERIAL #	CATALOG #		
0MRS0200Z	MRS200	ATO®-MINI®-Maxi Modular Rack System	MRS Racks 1 & 2 (Assembled)
0MRS0200ZXE	MRS200E	EMPTY ATO®-MINI®-Maxi Modular Rack System	MRS Rack with ATO®-MINI®-Maxi graphics (only)
0MRS0200ZXMA	MRS200MA	Marine Fuse Modular Rack System	MRS Rack with ATO®-MINI®-Maxi -Glass graphics (only)
0MRS0300Z	MRS300	ATO®-MINI®-Maxi-Glass Modular Rack System	MRS Racks 1, 2 & 3 (Assembled)
0MRS0300ZXE	MRS300E	EMPTY ATO®-MINI®-Maxi-Glass Modular Rack System	Empty MRS Rack with "Glass" header (only)

CARDED		NEW PACKAGING MATERIAL #	DESCRIPTION
MATERIAL #	CATALOG #		
0MRS0001Z	MRS1	0MRS0001ZXA	ATO® Modular Rack System
0MRS0002Z	MRS2	0MRS0002ZXA	MINI®-Maxi Modular Rack System
0MRS0003Z	MRS3	0MRS0003ZXA	Glass Modular Rack System
0MRS0003ZXE	MRS3E	0MRS0003EZXA	Empty Glass Modular Rack System
0MRS0004Z	MRS4	0MRS0004ZXA	PAL-Mega Modular Rack System
0MRS0005Z	MRS5	0MRS0005ZXA	PAL-JCASE® Modular Rack System
0MRS0006Z	MRS6	0MRS0006ZXA	ATO®-MINI® Modular Rack System
0MRS0007Z	MRS7	0MRS0007ZXA	Modular Rack System Complete (MRS 1, 2, 3, 4, 5 & 6)
0MRS0009ZXA	MRS9	0MRS0009ZXA	ACS Micro2/Micro3/MCase Modular Rack System

Emergency Kits

Available in OEM ATO® and MINI® fuse versions.

The Littelfuse Emergency Diagnostic Fuse Kits are ideal for the glove box or trunk offering instant protection in the garage or on the road.

Packaging designed to generate impulse sales. Contains the most popular amperages.

Includes roadside tester/puller that tests, removes and installs fuses. Has its own power source that allows it to operate with or without voltage to a maximum of 24 volts.

MATERIAL #	CATALOG #	NEW PACKAGING MATERIAL #	DESCRIPTION	CONTENTS
00940362ZXA	094362B	00940362ZXAA	MINI® Emergency Kit	1 each: MINI 3A, 5A, 7.5A, 10A, 15A, 20A, 25A, 30A Fuses
00940363ZP	094363	00940363ZPA	MINI® Emergency Fuse Kit	1 each: MINI 3A, 5A, 7.5A, 10A, 15A, 20A, 25A, 30A Fuses (1) Puller
00940365ZP	094365	00940365ZPA	Motorcycle Glass Emergency Kit	1 each: AGX 5A, 10A, 15A, 20A Fuses 2 each: AGX 8A Fuses (1) Puller
00940366ZP	094366	00940366ZPA	Motorcycle ATO® Emergency Kit	1 each: ATO 5A, 7.5A, 10A, 15A, 20A Fuses (1) Puller
00940367ZP	094367	00940367ZPA	American Glass Emergency Kit	1 each: SFE 9A, 14A, 20A 1 each: AGC 5A, 15A, 30A Fuses (1) Puller
00940368ZP	094368	00940368ZPA	European GBC Emergency Kit	1 each: GBC 5A, 16A, 25A Fuses 2 each: GBC 8A Fuses (1) Puller
00940369ZP	094369	00940369ZPA	Japanese Glass Emergency Kit	1 each: AGC 5A, 10A, 15A, 20A, 30A Fuses (1) Puller
00940370ZP	094370	00940370ZPA	ATO® Emergency Kit	1 each: ATO 5A, 10A, 15A, 20A, 25A, 30A Fuses (1) Puller
00940418ZP	094418	00940418ZPA	ATO® Emergency Diagnostic Kit	1 each: ATO 5A, 10A, 15A, 20A, 25A, 30A Fuses (1) ATO Puller
00940419ZP	094419	00940419ZPA	Glass Emergency Fuse Kit	1 each: AGC 7.5, 15A, 20A, 25A, 30A (1) Glass Puller
00940461ZP	094461	00940461ZPA	MINI® Emergency Diagnostic Kit	1 each: MINI 3A, 4A, 7.5A, 10A, 15A, 20A, 25A, 30A Fuses (1) ATO/MINI Tester/Puller
00940479ZP	094479	00940479ZPA	ATO®/MINI® Emergency Diagnostic Kit	1 each: ATO 5A, 10A, 15A, 20A, 25A, 30A 1 each: MINI 3A, 5A, 7.5A, 10A, 15A, 20A, 25A, 30A Fuses (1) Puller
---	---	00940561ZPA	OEM Emergency Kit - GM	1 each: MINI 7.5A, 25A, 30A 1 each: LP MINI 10A, 15A 1 each: JCASE 20A, 30A, 40A, 50A 1 each: LPJCASE 30A, 40A, 2 each: MINI 20A 3 each: MINI 10A, 15A
---	---	00940562ZPA	OEM Emergency Kit - Ford	1 each: MINI 7.5A, 25A, 30A 1 each: LP MINI 10A, 15A 1 each: JCASE 20A, 30A, 40A, 50A 1 each: LPJCASE 30A, 40A, 2 each: MINI 20A 3 each: MINI 10A, 15A
---	---	00940563ZPA	OEM Emergency Kit - Chrysler/Dodge/Jeep	1 each: MINI 7.5A, 25A, 30A 1 each: JCASE 20A, 30A, 40A, 50A 2 each: MINI 20A 3 each: MINI 10A, 15A

Retail

Planogram

We developed the next generation of Retail Circuit Protection.
You now can fit more product in the same planogram space — 36% more.

MORE SPACE
for higher margin kits and assortments.

OVER 70% GREATER PROFIT POTENTIAL
per square foot with additional SKU's

DOUBLE PLANOGRAM PERFORMANCE
100% increase in retail dollar sales per square foot

INCREASE MARKET COVERAGE
with high amp JCASE, MAXI and PAL Auto Link fuses

ORIGINAL EQUIPMENT MANUFACTURER

OEM SYMBOL
Prominent on package assures consumers of quality and actual OE replacement.

COLOR CODED
for easier stocking and consumer selection.

RECLOSABLE
Keeps key marketing data with package until completely consumed.

MULTI-LINGUAL
One SKU covers US, Canadian, German and Latin American markets.

MATERIAL #	CATALOG #	DESCRIPTION
00940477Z	094477	Our 87 SKU, 510-piece pre-pack Plan-O-Gram includes full blade-fuse coverage, as well as expanded coverage into newer parts such as Low-Profile MINI, Low-Profile JCASE, MICRO2, MICRO3, MCASE and Emergency Kits. Includes blade fuses, glass fuses, circuit breakers, Assortment and Emergency kits, fuse holders and fuse tester/pullers. Measures approximately 36"x36".
00940478Z	094478	Our 103 SKU, 625-piece pre-pack Plan-O-Gram is our largest retail assortment featuring multiple facings of the most popular items. This assortment expands your line coverage to fill the needs of your DIY and professional dealer/installer customers as well. Measures approximately 48"x32".

Graphics

Header Cards

An attractive header card is available for Littelfuse Circuit Protection product displays. Measures 36" wide x 8" high or 48" X 8" high.

MATERIAL #	DESCRIPTION
AA979	36" X 8" Display Header for 36" Planogram (PART# 00940477Z)
AA980	48" X 8" Display Header for 48" Planogram (PART# 00940478Z)

©2014 Littelfuse Automotive Aftermarket Circuit Protection

Packaging / Part Numbering

Bulk Carton
The outer corrugated cardboard box that holds several cartons.

Carton
The outer corrugated cardboard box that holds several inner packs, or bulk fuses (no inner packs).

Pill Box
A small plastic box containing fuses. Pillboxes are snap-shut resealable.

Blister Pack
A retail package containing one or several identical products, such as fuses, or it may contain an assortment of fuses. Blister packs are designed to fit on a peg-hook. 'Bubble pack' or 'clamshell' packages are blister packs.

Inner Pack
A small chipboard box containing several blister packs or pillboxes.

Standard Fuse Packaging

Boxed Merchandise	Pieces/Box	Stnd. Pack	Order
ATO®, MINI® Fuses	5 to a box	100 (twenty 5 packs)	by piece
Glass Ceramic Fuses	5 to a box	50 (ten 5 packs)	by piece
AGU Fuses	10 to a box	10 (one 10 pack)	by piece
MAXI, PAL, MEGA®, MIDI®	1 to a pack	10	by piece
Flashers, Circuit Breakers, Fuseholders	1 to a pack	10	by piece
Retail Packaged Merchandise	**Fuses/Card**	**Stnd. Pack**	**Order**
ATO®, MINI® Fuses, Glass, Ceramic Fuses	5 to a card	5 cards/shelf pack	by card
MAXI, PAL, MEGA®, MIDI® Fuses	1 to a card	5 cards/shelf pack	by card
Pro•Tek Professional Packs	25	5 cards/shelf pack	by card
Retail Carded Kits and Assortments	Various	5 cards/shelf pack	by card
Assortments, Jobber Boards, Merchandisers, etc.	Various	Single unit	by unit

Weights, Cubes & UPC Chart

Visit our Web Site at www.littelfuse.com to view, print or download UPC, package dimensions weights and cubes. Or call customer service at 1-800-323-2480 in the United States or 1-800 LF FUSES (533-8737) in Canada for a hard copy or disk.

Examples of order numbers

Order numbers must have between 9 characters and 15 characters. These are for added description, such as ZXPRO. When you place an order, write or type the characters without a break in the string.

0ATO 010. VP

First set of four "ATO Fuses" | Second set of four "10 Amps" | "Retail pack of 5"

0MIN 030. ZXPRO

First set of four "MINI Fuses" | Second set of four "30 Amps" | "Professional Pack"

Mandatory characters

First set of four:
These identify the product group, like LMIN (Low profile MINI fuse) or 0MAX (MAXI fuses).

Second set of four:
These identify the product subgroup. In fuses, this usually identifies the amperage. The decimal point counts as one character, eg 010. = 10A, 100. = 100A, 01.5 = 1.5A.

9th character:
Inner pack quantity. See list of codes below.

Inner Pack Codes
Quantity Code

I =X	500 = u
5=V	1000 = M
10 = T	1500 = D
20 = s	2500 = E
50 = L	3000 =W
100 = H	4000 = y
200 = F	5000 = N
250 = G	10 000 = K

Optional characters

10th Character
Packaging type. P= Retail pack, B=Blister Pack.

Last set of 5:
May be used to give additional information, like MXGLO for SmartGlow fuses

©2014 Littelfuse Automotive Aftermarket Circuit Protection

Littelfuse®

Expertise Applied | Answers Delivered

FUSE SELECTION CHART

ORIGINAL EQUIPMENT MANUFACTURER

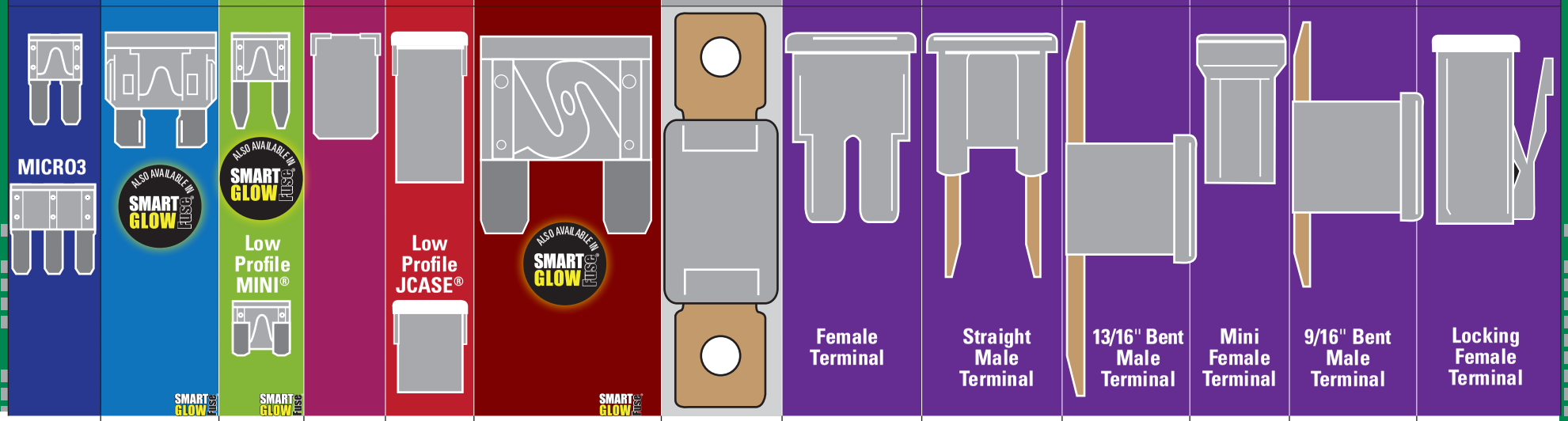

TYPE	MICRO2	ATO®		MINI®		MCASE®	JCASE®	MAXI		MEGA®	PAL Series 0	PAL Series 1	PAL Series 2	PAL Series 3	PAL Series 4	PAL Series 5
Black		1A										80A	80A		80A	
Gray		2A		2A		15A						120A	120A			
Violet		3A	3A	3A	3A				100A				140A		140A	
Pink		4A		4A		30A	30A			250A	30A	30A	30A	30A	30A	
Tan	5A	5A	5A	5A	5A			70A	70A	225A						
Brown	7.5A	7.5A	7.5A	7.5A	7.5A								70A			25A
Red	10A	10A	10A	10A	10A		50A	50A	50A	80A	50A		50A		50A	
Blue	15A	15A	15A	15A	15A	20A	20A	60A	60A	200A	20A	100A	100A		100A	
Yellow	20A	20A	20A	20A	20A		60A	20A	20A	100A	60A	60A	60A			
Clear	25A (MICRO 2 ONLY)	25A	25A	25A	25A	25A		80A	80A							
Green	30A (MICRO 2 ONLY)	30A	30A	30A	30A	40A	40A	30A	30A	125A	40A		40A	40A	40A	30A
Orange		40A						40A	40A	150A						
White							25A			175A					120A	

GLASS

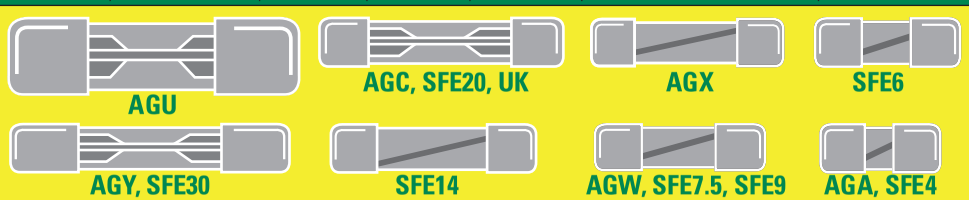

AGA	AGC	AGU	AGW	AGX	AGY	SFE	UK
1A, 1.5A, 2A, 2.5A, 3A, 5A, 6A, 7.5A, 10A, 15A, 20A, 25A, 30A	.5A, 1A, 1.5A, 2A, 2.5A, 3A, 4A, 5A, 6A, 7.5A, 8A, 10A, 15A, 20A, 25A, 30A, 35A	1A, 2A, 3A, 4A, 5A, 10A, 15A, 20A, 25A, 30A, 35A, 40A, 50A, 60A	1A, 1.5A, 2.5A, 3A, 4A, 5A, 6A, 15A, 20A, 30A	2A, 3A, 20A, 25A, 30A	50A	4A, 6A, 7.5A, 9A, 14A, 20A, 30A	35A, 50A

FUSE HOLDER SELECTION CHART

ATO®

ATO® Fuse In-Line Fuseholder with Protective Cap
Use with ATO® Fuse 1 to 20 amps.

Part Number: FHAC1

ATO® Fuse Heavy Duty In-Line Fuseholder with Protective Cap
Use with ATO® 25 and 30 amp fuses for air conditioner or other heavy duty applications.

Part Number: FHAC2

ATO® Fuse In-Line Fuseholder
Use with ATO® Fuse 1 to 20 amps.

Part Number: FHA1

ATO® Fuse Heavy Duty In-Line Fuseholder
Use with ATO® 25 and 30 amp fuses for air conditioner or other heavy duty applications. FHA30 includes 30 amp fuse.

Part Number: FHA2, FHA30

ATO® Fuse In-line Panel Mount Fuseholder
Versatile for in-line or snap mount panel applications. Interlock body design allows fuseholders to be snapped together. Use with ATO® Fuse 1 to 20 amps.

Part Number: AFH1

ATO® Fuse Heavy Duty In-line Panel Mount Fuseholder
Use with ATO® Fuse 25 and 30 amp fuses.

Part Number: AFH2

SMARTGLOW Fuse® ATO® & MINI®

ATO® and MINI® SMARTGLOW Fuse In-line Fuseholder with Protective Cap
Clear housing to display SmartGlow fuse. Use with ATO® Fuse 1 to 20 amps and MINI® Fuse 2 to 20 amps.

Part Number: 20-1010 (ATO®), 20-1020 (MINI®)

MINI®

MINI® Fuse In-line Fuseholder with Protective Cap
Use with MINI® Fuse 2 to 20 amps.

Part Number: FHM1

MINI® Fuse Heavy Duty In-Line Fuseholder with Protective Cap
Use with MINI® Fuse 25 and 30 amp fuses.

Part Number: FHM2

MAXI

MAXI™ Fuse In-line Fuseholder with Protective Cap
Use with MAXI™ Fuse up to 60 amps.

Part Number: MAH1

GLASS

Universal Glass Bayonet Knob In-line Fuseholder
Use with Glass SFE 71/2, 9, 14, 20, AGA, AGC, AGW and AGX Fuses up to 20 amps when proper spring is installed.

Part Number: FHP1

Universal Glass Twist-Lock In-line Fuseholder
Use with Glass SFE 4, 6, 71/2, 9, 14, 20, AGA, AGC, AGW and AGX Fuses up to 20 amps.

Part Number: FNY1

Glass Fuse Heavy Duty 30 Amp In-line Fuseholder
Spring loaded heavy duty glass fuseholder includes AGC 30 amp fuse for GM air conditioner, heater blower motors or other heavy duty applications. FNY 20 includes 20A AGC Fuse.

Part Number: FNY30, FNY20

Additional Fuse Holders are available.

Littelfuse®
Expertise Applied | Answers Delivered

Cross Reference Guide

Competition	Littelfuse	Competition	Littelfuse	Competition	Littelfuse
15600-06-20	**350417**	BP/FLF(Amp)	**PAL0(Amp)BP**	KB-7	**094419**
15600-06-20	**350418**	FLM(Amp)	**PAL1(Amp)**	KE-5	**094134**
BP/15600-06-20	**350417BP**	BP/FLM(Amp)	**PAL1(Amp)BP**	KG-5	**094133**
BP/15600-06-20	**340418BP**	FLB(Amp)	**PAL2(Amp)**	KG-7	**094368**
BP/A-5	**094294**	BP/FLB(Amp)	**PAL2(Amp)BP**	KJ-5	**094135**
ACB 20	**ACB20**	FLS(Amp)	**PAL3(Amp)**	KJ-7	**094369**
BP/ACB 20	**ACB20BP**	BP/FLS(Amp)	**PAL3(Amp)BP**	KJA-6	**094301**
AGA(Amp)	**AGA(Amp)**	FLD(Amp)	**PAL4(Amp)**	KJA-7	**094370**
BP/AGA(Amp)	**AGA(Amp)BP**	BP/FLD(Amp)	**PAL4(Amp)BP**	KM-8	**094362**
AGC(Amp)	**AGC(Amp)**	FLN(Amp)	**PAL5(Amp)**	KM-9	**094363**
BP/AGC(Amp)	**AGC(Amp)BP**	BP/FLN(Amp)	**PAL5(Amp)BP**	MAX(Amp)	**MAX(Amp)**
AGU(Amp)	**AGU(Amp)**	FMX(Amp)	**JCAS(Amp)**	BP/MAX(Amp)	**MAX(Amp)BP**
AGW(Amp)	**AGW(Amp)**	BP/FMX(Amp)	**JCAS(Amp)BP**	MDL(Amp)	**313(Amp)**
BP/AGW(Amp)	**AGW(Amp)BP**	BP/FP-A3	**097023BP**	MKA-5	**094366**
AGX(Amp)	**AGX(Amp)**	BP/FT-2	**097019BP**	MKA-6	**094366**
BP/AGX(Amp)	**AGX(Amp)BP**	BP/FT-3	**097019BP**	MKG-6	**094365**
AGY 50	**AGY 50**	GBC(Amp)	**GBC(Amp)**	MKG-7	**094365**
AK-6	**094202**	BP/GBC(Amp)	**GBC(Amp)BP**	NO. 18	**094292**
ANL (BY AMPERE)	**CNL (BY AMPERE)**	BP/HHA	**FHA200BP**	NO. 26	**094263**
ANN (BY AMPERE)	**CNN (BY AMPERE)**	HHC	**FHA1**	NO. 42	**094400**
AT-7	**094370**	HHD	**FHA2**	NO. 45	**094375**
ATC(Amp)	**ATO(Amp)**	HHD-12	**094303**	NO. 70	**094374**
BP/ATC(Amp)	**ATO(Amp)BP**	HHD-30	**FHA30**	NO. 95BK	**094422**
VP/ATC(Amp)	**ATO(Amp)PRO**	HHF	**FHAC1**	NO. 100BK	**094409**
ATM(Amp)	**MIN(Amp)**	HHG	**FHAC2**	NO. 150(EMPTY)	**MRS300E**
BP/ATM(Amp)	**MIN(Amp)BP**	HHK	**FNY1**	NO. 160BK	**094410**
VP/ATM(Amp)	**MIN(Amp)PRO**	HHL	**FHM1**	NO. 200(EMPTY)	**MRS300E**
CB1911-(Amp)	**MCB(Amp)**	HHM	**FHM2**	NO. 201	**097396**
CB1921-(Amp)	**MXB(Amp)**	HHN	**FNY30**	NO. 204(EMPTY)	**MRS300E**
CB212-(Amp)	**MIB(Amp)**	HHX	**MAH1**	NO. 245	**094360**
CB2221-(Amp)	**MNB(Amp)**	HKP-CC	**3453LF2A**	NO. 245(EMPTY)	**MRS300E**
CB-5	**094189**	HKP-HH	**3453LF8A**	NO. 500(EMPTY)	**MRS300E**
CBC(Amp)	**8120(Amp)ST**	HMK	**FNY30**	NO. 536	**FLR536/552**
CBC(Amp)B	**8130(Amp)ST**	BP/HHC	**FHA1BP**	BP/536	**FLR536/552BP**
BP/CBC-(Amp)B	**8130(Amp)BP**	BP/HHD	**FHA2BP**	NO. 552	**FLR536/552**
CBF(Amp)	**CBF(Amp)**	BP/HHD 30	**FHA30BP**	BP/552	**FLR536/552BP**
BP/CBF(Amp)	**CBF(Amp)BP**	BP/HHF	**FHAC1BP**	NO. 550	**FLR550**
CCB 25	**CCB25**	BP/HHG	**FHAC2BP**	BP/550	**FLR550BP**
BP/CCB 25	**CCB25BP**	BP/HHH	**FHM200BP**	NO. 569	**FLR569**
CCB 30	**ACB30**	BP/HHK	**FNY1BP**	BP/569	**FLR569BP**
BP/CCB 30	**ACB30BP**	BP/HHL	**FHM1BP**	S-8202-(Amp)	**035408(Amp)ZXGY**
EF-5	**094412**	BP/HHM	**FHM2BP**	BP/S-8202-2	**OMN2BP**
EK-7	**094367**	BP/HHN	**FNY30BP**	BP/S-8202-4	**OMN4BP**
FCB 20	**FCB20**	BP/HKP-CC	**3453LF2C**	S-8301-(# of poles)	**3460(# of poles)**
BP/FCB 20	**FCB20BP**	BP/HKP-HH	**3453LF8C**	UCB(Amp)	**UCB(Amp)**
FP-A3	**097023**	BP/HL	**094413**	BP/UCB(Amp)	**UCB(Amp)BP**
FT-2	**097019**	BP/HMK	**FNY30BP**	SFE(Amp)	**SFE(Amp)**
FT-3	**097019**	HRK	**FHP1**	BPSFE(Amp)	**SFE(Amp)BP**
UK-6	**094154**	HTB-22M	**3453LF2A**		
FLF(Amp)	**PAL0(Amp)**	HTB-261	**3453LF8A**		

NOTES

Littelfuse®

Expertise Applied | Answers Delivered

Littelfuse, Inc.
8755 West Higgins Road Suite 500
Chicago, IL, 60631 USA
773-628-1000

© 2014 Littelfuse, Inc. Printed in the USA
Speficiations, description and illustrative material in this literature are as accurate as known at the time of publication, but are subject to changes without notice. Visit **www.Littelfuse.com** for the most up-to-date technical information.

Общество с ограниченной ответственностью «МосЧип» ИНН 7719860671 / КПП 771901001
Адрес: 105318, г.Москва, ул.Щербаковская д.3, офис 1107

Данный компонент на территории Российской Федерации

Вы можете приобрести в компании MosChip.

Для оперативного оформления запроса Вам необходимо перейти по данной ссылке:

http://moschip.ru/get-element

Вы можете разместить у нас заказ для любого Вашего проекта, будь то серийное производство или разработка единичного прибора.

В нашем ассортименте представлены ведущие мировые производители активных и пассивных электронных компонентов.

Нашей специализацией является поставка электронной компонентной базы двойного назначения, продукции таких производителей как XILINX, Intel (ex.ALTERA), Vicor, Microchip, Texas Instruments, Analog Devices, Mini-Circuits, Amphenol, Glenair.

Сотрудничество с глобальными дистрибьюторами электронных компонентов, предоставляет возможность заказывать и получать с международных складов практически любой перечень компонентов в оптимальные для Вас сроки.

На всех этапах разработки и производства наши партнеры могут получить квалифицированную поддержку опытных инженеров.

Система менеджмента качества компании отвечает требованиям в соответствии с ГОСТ Р ИСО 9001, ГОСТ РВ 0015-002 и ЭС РД 009

Офис по работе с юридическими лицами:

105318, г.Москва, ул.Щербаковская д.3, офис 1107, 1118, ДЦ «Щербаковский»

Телефон: +7 495 668-12-70 (многоканальный)

Факс: +7 495 668-12-70 (доб.304)

E-mail: info@moschip.ru

Skype отдела продаж:
moschip.ru
moschip.ru_4
moschip.ru_6
moschip.ru_9