74HC3G04; 74HCT3G04

Inverter

Rev. 03 — 2 July 2008 | Product data sheet

1. General description

The 74HC3G04 and 74HCT3G04 are high-speed Si-gate CMOS devices. They provide three inverting buffers.

The HC device has CMOS input switching levels and supply voltage range 2 V to 6 V.

The HCT device has TTL input switching levels and supply voltage range 4.5 V to 5.5 V.

2. Features

- Wide supply voltage range from 2.0 V to 6.0 V
- Symmetrical output impedance
- High noise immunity
- Low power dissipation
- Balanced propagation delays
- Multiple package options
- ESD protection:
  - HBM JESD22-A114E exceeds 2000 V
  - MM JESD22-A115-A exceeds 200 V
- Specified from –40 °C to +85 °C and –40 °C to +125 °C

3. Ordering information

Table 1. Ordering information

Type number	Package			
	Temperature range	Name	Description	Version
74HC3G04DP	–40 °C to +125 °C	TSSOP8	plastic thin shrink small outline package; 8 leads; body width 3 mm; lead length 0.5 mm	SOT505-2
74HCT3G04DP				
74HC3G04DC	–40 °C to +125 °C	VSSOP8	plastic very thin shrink small outline package; 8 leads; body width 2.3 mm	SOT765-1
74HCT3G04DC				
74HC3G04GD	–40 °C to +125 °C	XSON8U	plastic extremely thin small outline package; no leads; 8 terminals; UTLP based; body 3 × 2 × 0.5 mm	SOT996-2
74HCT3G04GD				

founded by Philips

4. Marking

Table 2. Marking codes

Type number	Marking code
74HC3G04DP	H04
74HCT3G04DP	T04
74HC3G04DC	H04
74HCT3G04DC	T04
74HC3G04GD	H04
74HCT3G04GD	T04

5. Functional diagram

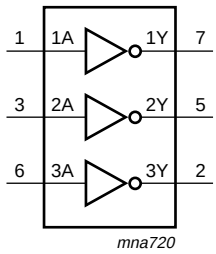

Fig 1. Logic symbol

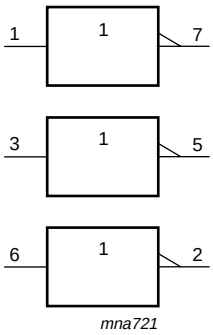

Fig 2. IEC logic symbol

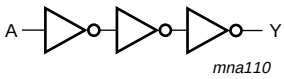

Fig 3. Logic diagram (one gate)

6. Pinning information

6.1 Pinning

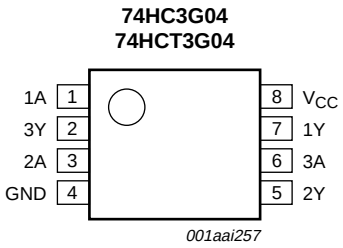

Fig 4. Pin configuration SOT505-2 (TSSOP8) and SOT765-1 (VSSOP8)

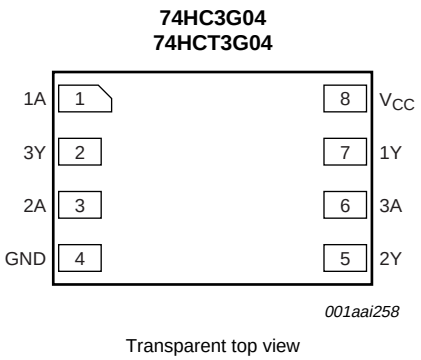

Fig 5. Pin configuration SOT996-2 (XSON8U)

© NXP B.V. 2008. All rights reserved.

6.2 Pin description

Table 3. Pin description

Symbol	Pin	Description
1A, 2A, 3A	1, 3, 6	data input
GND	4	ground (0 V)
1Y, 2Y, 3Y	7, 5, 2	data output
V_{CC}	8	supply voltage

7. Functional description

Table 4. Function table[1]

Input	Output
nA	**nY**
L	H
H	L

[1] H = HIGH voltage level; L = LOW voltage level.

8. Limiting values

Table 5. Limiting values

In accordance with the Absolute Maximum Rating System (IEC 60134). Voltages are referenced to GND (ground = 0 V).

Symbol	Parameter	Conditions		Min	Max	Unit
V_{CC}	supply voltage			–0.5	+7.0	V
I_{IK}	input clamping current	V_I < –0.5 V or V_I > V_{CC} + 0.5 V	[1]	-	±20	mA
I_{OK}	output clamping current	V_O < –0.5 V or V_O > V_{CC} + 0.5 V	[1]	-	±20	mA
I_O	output current	V_O = –0.5 V to (V_{CC} + 0.5 V)	[1]	-	25	mA
I_{CC}	supply current		[1]	-	50	mA
I_{GND}	ground current		[1]	–50	-	mA
T_{stg}	storage temperature			–65	+150	°C
P_D	dynamic power dissipation	T_{amb} = –40 °C to +125 °C	[2]	-	300	mW

[1] The input and output voltage ratings may be exceeded if the input and output current ratings are observed.

[2] For TSSOP8 package: above 55 °C the value of P_{tot} derates linearly with 2.5 mW/K.
For VSSOP8 package: above 110 °C the value of P_{tot} derates linearly with 8 mW/K.
For XSON8 package: above 45 °C the value of P_{tot} derates linearly with 2.4 mW/K.

© NXP B.V. 2008. All rights reserved.

9. Recommended operating conditions

Table 6. Recommended operating conditions

Voltages are referenced to GND (ground = 0 V).

Symbol	Parameter	Conditions	74HC3G04			74HCT3G04			Unit
			Min	Typ	Max	Min	Typ	Max	
V_{CC}	supply voltage		2.0	5.0	6.0	4.5	5.0	5.5	V
V_I	input voltage		0	-	V_{CC}	0	-	V_{CC}	V
V_O	output voltage		0	-	V_{CC}	0	-	V_{CC}	V
T_{amb}	ambient temperature		–40	+25	+125	–40	+25	+125	°C
$\Delta t/\Delta V$	input transition rise and fall rate	V_{CC} = 2.0 V	-	-	625	-	-	-	ns/V
		V_{CC} = 4.5 V	-	1.67	139	-	1.67	139	ns/V
		V_{CC} = 6.0 V	-	-	83	-	-	-	ns/V

10. Static characteristics

Table 7. Static characteristics

Voltages are referenced to GND (ground = 0 V). All typical values are measured at T_{amb} = 25 °C.

Symbol	Parameter	Conditions	25 °C			–40 °C to +85 °C		–40 °C to +125 °C		Unit
			Min	Typ	Max	Min	Max	Min	Max	
74HC3G04										
V_{IH}	HIGH-level input voltage	V_{CC} = 2.0 V	1.5	1.2	-	1.5	-	1.5	-	V
		V_{CC} = 4.5 V	3.15	2.4	-	3.15	-	3.15	-	V
		V_{CC} = 6.0 V	4.2	3.2	-	4.2	-	4.2	-	V
V_{IL}	LOW-level input voltage	V_{CC} = 2.0 V	-	0.8	0.5	-	0.5	-	0.5	V
		V_{CC} = 4.5 V	-	2.1	1.35	-	1.35	-	1.35	V
		V_{CC} = 6.0 V	-	2.8	1.8	-	1.8	-	1.8	V
V_{OH}	HIGH-level output voltage	$V_I = V_{IH}$ or V_{IL}								
		I_O = –20 μA; V_{CC} = 2.0 V	1.9	2.0	-	1.9	-	1.9	-	V
		I_O = –20 μA; V_{CC} = 4.5 V	4.4	4.5	-	4.4	-	4.4	-	V
		I_O = –20 μA; V_{CC} = 6.0 V	5.9	6.0	-	5.9	-	5.9	-	V
		I_O = –4.0 mA; V_{CC} = 4.5 V	4.18	4.32	-	4.13	-	3.7	-	V
		I_O = –5.2 mA; V_{CC} = 6.0 V	5.63	5.81	-	5.63	-	5.2	-	V
V_{OL}	LOW-level output voltage	$V_I = V_{IH}$ or V_{IL}								
		I_O = 20 μA; V_{CC} = 2.0 V	-	0	0.1	-	0.1	-	0.1	V
		I_O = 20 μA; V_{CC} = 4.5 V	-	0	0.1	-	0.1	-	0.1	V
		I_O = 20 μA; V_{CC} = 6.0 V	-	0	0.1	-	0.1	-	0.1	V
		I_O = 4.0 mA; V_{CC} = 4.5 V	-	0.15	0.26	-	0.33	-	0.4	V
		I_O = 5.2 mA; V_{CC} = 6.0 V	-	0.16	0.26	-	0.33	-	0.4	V
I_I	input leakage current	$V_I = V_{CC}$ or GND; V_{CC} = 6.0 V	-	-	±0.1	-	±1.0	-	±1.0	μA
I_{CC}	supply current	per input pin; V_{CC} = 6.0 V; $V_I = V_{CC}$ or GND; I_O = 0 A;	-	-	1.0	-	10	-	20	μA

© NXP B.V. 2008. All rights reserved.

Table 7. Static characteristics *...continued*

Voltages are referenced to GND (ground = 0 V). All typical values are measured at T_{amb} = 25 °C.

Symbol	Parameter	Conditions	25 °C			–40 °C to +85 °C		–40 °C to +125 °C		Unit
			Min	Typ	Max	Min	Max	Min	Max	
C_I	input capacitance		-	1.5	-	-	-	-	-	pF
74HCT3G04										
V_{IH}	HIGH-level input voltage	V_{CC} = 4.5 V to 5.5 V	2.0	1.6	-	2.0	-	2.0	-	V
V_{IL}	LOW-level input voltage	V_{CC} = 4.5 V to 5.5 V	-	1.2	0.8	-	0.8	-	0.8	V
V_{OH}	HIGH-level output voltage	$V_I = V_{IH}$ or V_{IL}								
		I_O = –20 μA; V_{CC} = 4.5 V	4.4	4.5	-	4.4	-	4.4	-	V
		I_O = –4.0 mA; V_{CC} = 4.5 V	4.18	4.32	-	4.13	-	3.7	-	V
V_{OL}	LOW-level output voltage	$V_I = V_{IH}$ or V_{IL}								
		I_O = 20 μA; V_{CC} = 4.5 V	-	0	0.1	-	0.1	-	0.1	V
		I_O = 4.0 mA; V_{CC} = 4.5 V	-	0.15	0.26	-	0.33	-	0.4	V
I_I	input leakage current	$V_I = V_{CC}$ or GND; V_{CC} = 5.5 V	-	-	±0.1	-	±1.0	-	±1.0	μA
I_{CC}	supply current	per input pin; V_{CC} = 5.5 V; $V_I = V_{CC}$ or GND; I_O = 0 A;	-	-	1.0	-	10	-	20	μA
ΔI_{CC}	additional supply current	per input; V_{CC} = 4.5 V to 5.5 V; $V_I = V_{CC}$ – 2.1 V; I_O = 0 A	-	-	300	-	375	-	410	μA
C_I	input capacitance		-	1.5	-	-	-	-	-	pF

11. Dynamic characteristics

Table 8. Dynamic characteristics

Voltages are referenced to GND (ground = 0 V); all typical values are measured at T_{amb} = 25 °C; for test circuit see Figure 7.

Symbol	Parameter	Conditions		25 °C			–40 °C to +85 °C		–40 °C to +125 °C		Unit
				Min	Typ	Max	Min	Max	Min	Max	
74HC3G04											
t_{pd}	propagation delay	nA to nY; see Figure 6	[1]								
		V_{CC} = 2.0 V		-	22	75	-	90	-	110	ns
		V_{CC} = 4.5 V		-	8	15	-	18	-	22	ns
		V_{CC} = 6.0 V		-	6	13	-	16	-	20	ns
t_t	transition time	see Figure 6	[2]								
		V_{CC} = 2.0 V		-	18	75	-	95	-	125	ns
		V_{CC} = 4.5 V		-	6	15	-	19	-	25	ns
		V_{CC} = 6.0 V		-	5	13	-	16	-	20	ns
C_{PD}	power dissipation capacitance	V_I = GND to V_{CC}	[3]	-	9	-	-	-	-	-	pF

© NXP B.V. 2008. All rights reserved.

Table 8. Dynamic characteristics *...continued*

Voltages are referenced to GND (ground = 0 V); all typical values are measured at T_{amb} = 25 °C; for test circuit see Figure 7.

Symbol	Parameter	Conditions		25 °C			–40 °C to +85 °C		–40 °C to +125 °C		Unit
				Min	Typ	Max	Min	Max	Min	Max	
74HCT3G04											
t_{pd}	propagation delay	nA to nY; see Figure 6	[1]								
		V_{CC} = 4.5 V		-	10	18	-	23	-	29	ns
t_t	transition time	V_{CC} = 4.5 V; see Figure 6	[2]	-	6	15	-	19	-	22	ns
C_{PD}	power dissipation capacitance	V_I = GND to V_{CC} – 1.5 V	[3]	-	9	-	-	-	-	-	pF

[1] t_{pd} is the same as t_{PLH} and t_{PHL}.

[2] t_t is the same as t_{TLH} and t_{THL}.

[3] C_{PD} is used to determine the dynamic power dissipation (P_D in µW).
$P_D = C_{PD} \times V_{CC}^2 \times f_i \times N + \Sigma(C_L \times V_{CC}^2 \times f_o)$ where:
f_i = input frequency in MHz;
f_o = output frequency in MHz;
C_L = output load capacitance in pF;
V_{CC} = supply voltage in V;
N = number of inputs switching;
$\Sigma(C_L \times V_{CC}^2 \times f_o)$ = sum of outputs.

12. Waveforms

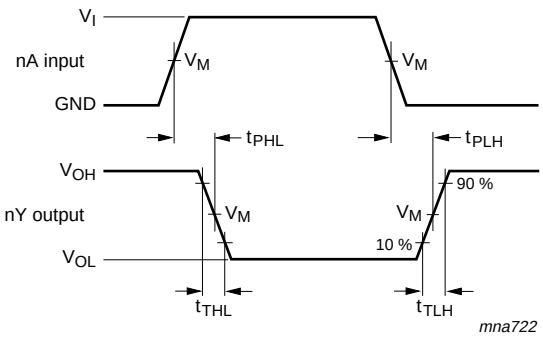

Measurement points are given in Table 9.

Logic levels: V_{OL} and V_{OH} are typical output voltage levels that occur with the output load.

Fig 6. The data input (nA) to output (nY) propagation delays

Table 9. Measurement points

Type	Input	Output
	V_M	V_M
74HC3G04	0.5 × V_{CC}	0.5 × V_{CC}
74HCT3G04	1.3 V	1.3 V

© NXP B.V. 2008. All rights reserved.

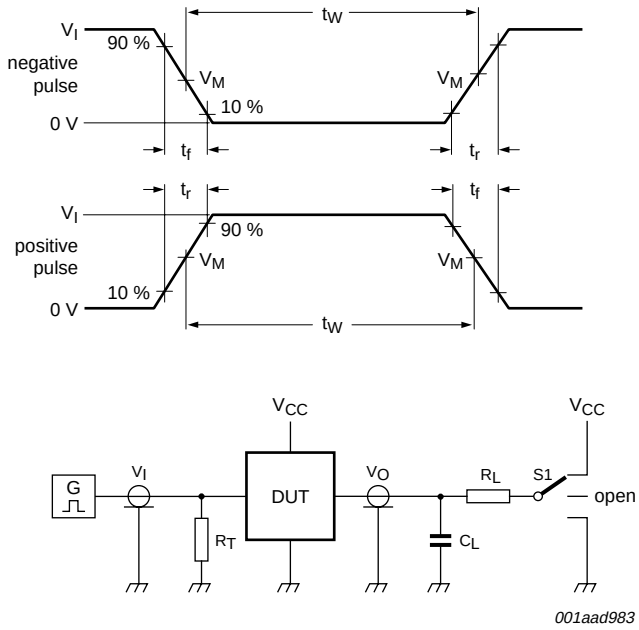

Test data is given in Table 10.

Definitions for test circuit:

R_T = Termination resistance should be equal to output impedance Z_o of the pulse generator.

C_L = Load capacitance including jig and probe capacitance.

R_L = Load resistance.

S1 = Test selection switch.

Fig 7. Load circuit for measuring switching times

Table 10. Test data

Type	Input		Load		S1 position
	V_I	t_r, t_f	C_L	R_L	t_{PHL}, t_{PLH}
74HC3G04	V_{CC}	≤ 6 ns	50 pF	1 kΩ	open
74HCT3G04	3 V	≤ 6 ns	50 pF	1 kΩ	open

© NXP B.V. 2008. All rights reserved.

13. Package outline

TSSOP8: plastic thin shrink small outline package; 8 leads; body width 3 mm; lead length 0.5 mm SOT505-2

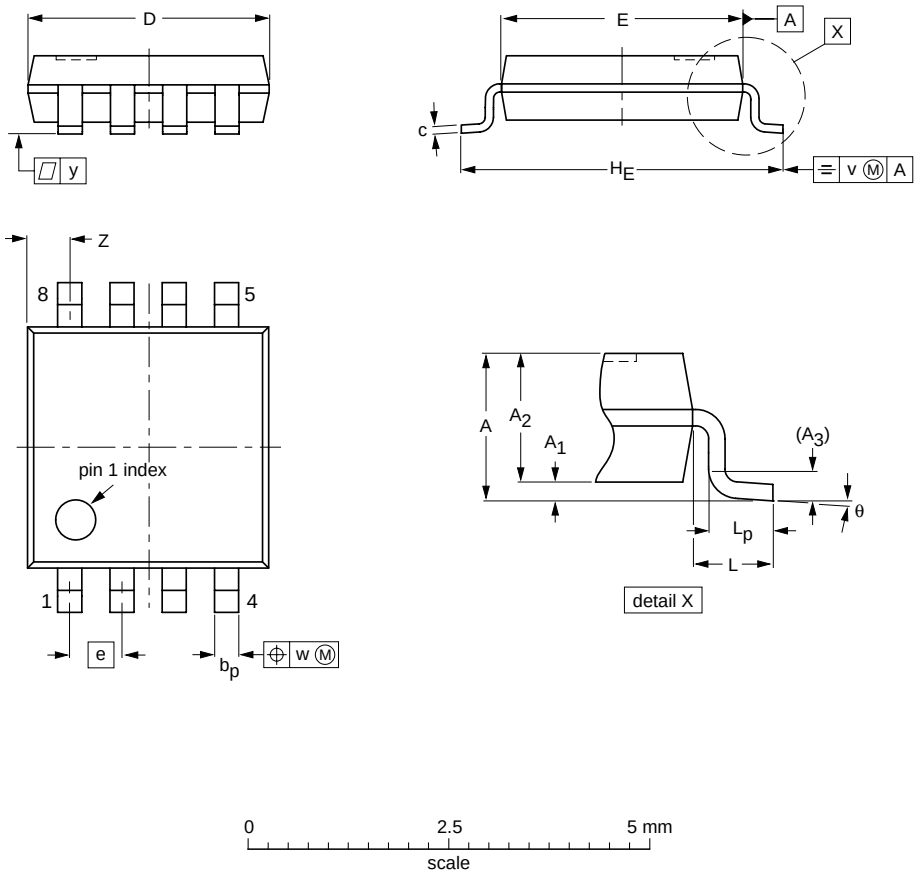

DIMENSIONS (mm are the original dimensions)

UNIT	A max.	A_1	A_2	A_3	b_p	c	$D^{(1)}$	$E^{(1)}$	e	H_E	L	L_p	v	w	y	$Z^{(1)}$	θ
mm	1.1	0.15 0.00	0.95 0.75	0.25	0.38 0.22	0.18 0.08	3.1 2.9	3.1 2.9	0.65	4.1 3.9	0.5	0.47 0.33	0.2	0.13	0.1	0.70 0.35	8° 0°

Note

1. Plastic or metal protrusions of 0.15 mm maximum per side are not included.

OUTLINE VERSION	REFERENCES				EUROPEAN PROJECTION	ISSUE DATE
	IEC	JEDEC	JEITA			
SOT505-2		- - -				02-01-16

Fig 8. Package outline SOT505-2 (TSSOP8)

© NXP B.V. 2008. All rights reserved.

VSSOP8: plastic very thin shrink small outline package; 8 leads; body width 2.3 mm **SOT765-1**

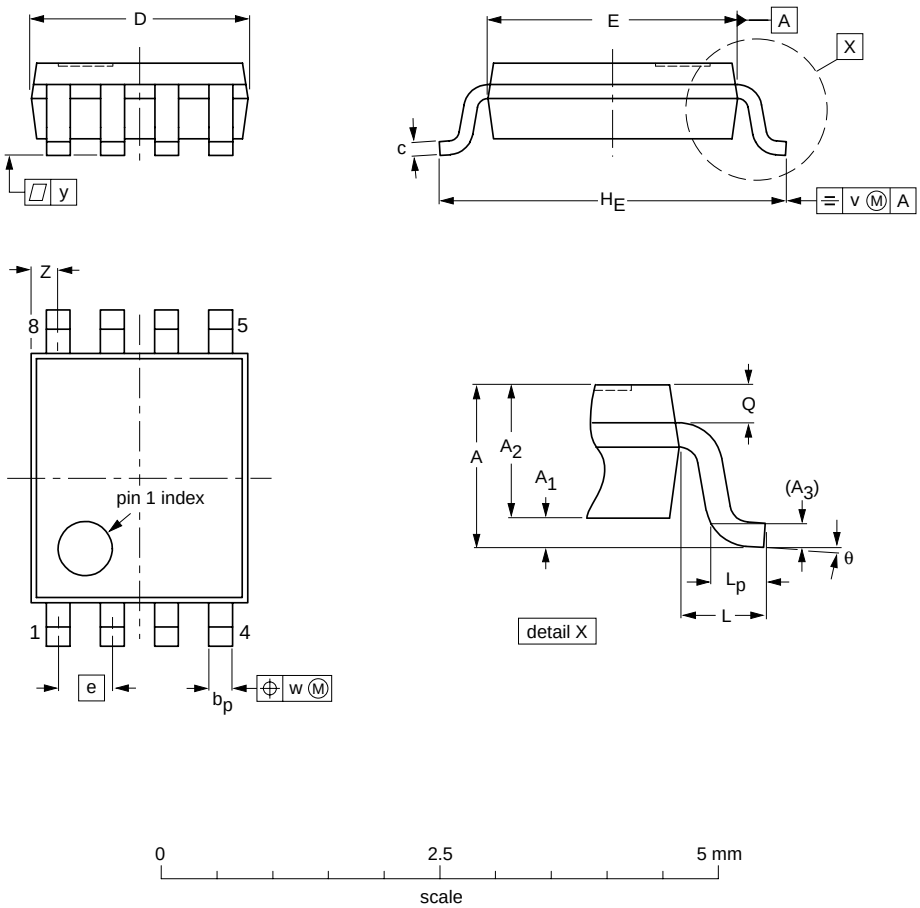

DIMENSIONS (mm are the original dimensions)

UNIT	A max.	A_1	A_2	A_3	b_p	c	$D^{(1)}$	$E^{(2)}$	e	H_E	L	L_p	Q	v	w	y	$Z^{(1)}$	θ
mm	1	0.15 0.00	0.85 0.60	0.12	0.27 0.17	0.23 0.08	2.1 1.9	2.4 2.2	0.5	3.2 3.0	0.4	0.40 0.15	0.21 0.19	0.2	0.13	0.1	0.4 0.1	8° 0°

Notes

1. Plastic or metal protrusions of 0.15 mm maximum per side are not included.
2. Plastic or metal protrusions of 0.25 mm maximum per side are not included.

OUTLINE VERSION	REFERENCES				EUROPEAN PROJECTION	ISSUE DATE
	IEC	JEDEC	JEITA			
SOT765-1		MO-187				02-06-07

Fig 9. Package outline SOT765-1 (VSSOP8)

© NXP B.V. 2008. All rights reserved.

XSON8U: plastic extremely thin small outline package; no leads; 8 terminals; UTLP based; body 3 x 2 x 0.5 mm **SOT996-2**

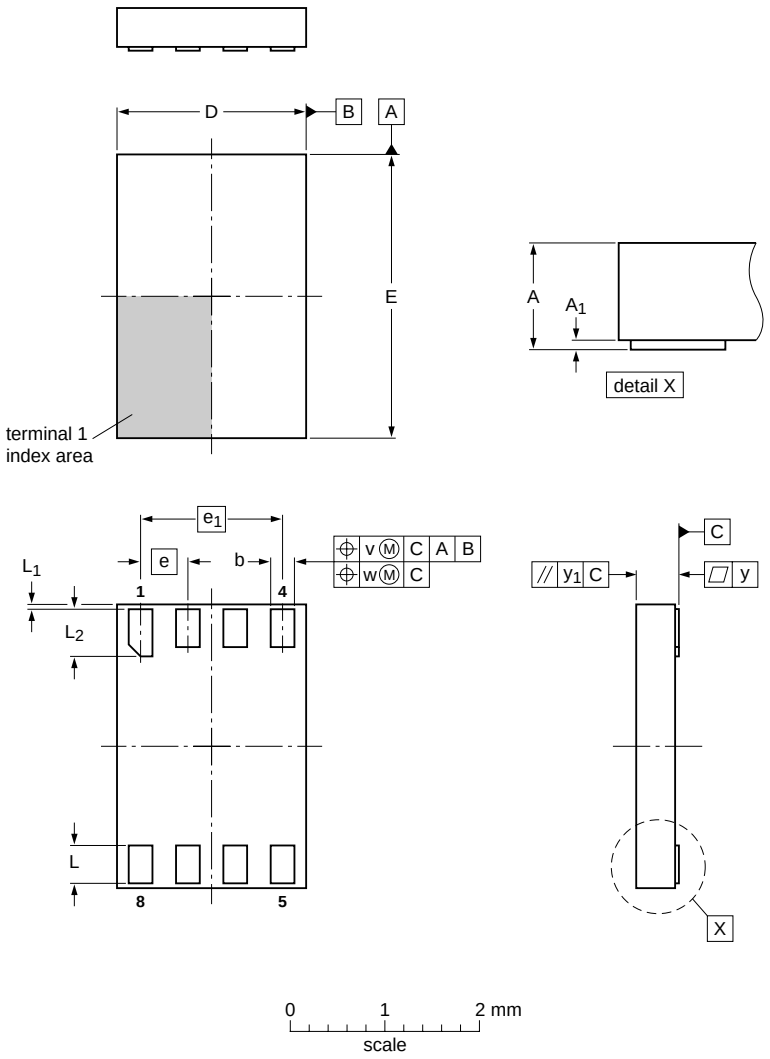

DIMENSIONS (mm are the original dimensions)

UNIT	A max	A_1	b	D	E	e	e_1	L	L_1	L_2	v	w	y	y_1
mm	0.5	0.05 0.00	0.35 0.15	2.1 1.9	3.1 2.9	0.5	1.5	0.5 0.3	0.15 0.05	0.6 0.4	0.1	0.05	0.05	0.1

OUTLINE VERSION	REFERENCES				EUROPEAN PROJECTION	ISSUE DATE
	IEC	JEDEC	JEITA			
SOT996-2	- - -		- - -			~~07-12-18~~ 07-12-21

Fig 10. Package outline SOT996-2 (XSON8U)

© NXP B.V. 2008. All rights reserved.

14. Abbreviations

Table 11. Abbreviations

Acronym	Description
CMOS	Complementary Metal-Oxide Semiconductor
DUT	Device Under Test
ESD	ElectroStatic Discharge
HBM	Human Body Model
MM	Machine Model
TTL	Transistor-Transistor Logic

15. Revision history

Table 12. Revision history

Document ID	Release date	Data sheet status	Change notice	Supersedes
74HC_HCT3G04_3	20080702	Product data sheet	-	74HC_HCT3G04_2
Modifications:	• The format of this data sheet has been redesigned to comply with the new identity guidelines of NXP Semiconductors. • Legal texts have been adapted to the new company name where appropriate. • Added type number 74HC3G04GD and 74HCT3G04GD (XSON8U package).			
74HC_HCT3G04_2	20031030	Product specification	-	74HC_HCT3G04_1
74HC_HCT3G04_1	20020726	Product specification	-	-

© NXP B.V. 2008. All rights reserved.

16. Legal information

16.1 Data sheet status

Document status[1][2]	Product status[3]	Definition
Objective [short] data sheet	Development	This document contains data from the objective specification for product development.
Preliminary [short] data sheet	Qualification	This document contains data from the preliminary specification.
Product [short] data sheet	Production	This document contains the product specification.

[1] Please consult the most recently issued document before initiating or completing a design.

[2] The term 'short data sheet' is explained in section "Definitions".

[3] The product status of device(s) described in this document may have changed since this document was published and may differ in case of multiple devices. The latest product status information is available on the Internet at URL http://www.nxp.com.

16.2 Definitions

Draft — The document is a draft version only. The content is still under internal review and subject to formal approval, which may result in modifications or additions. NXP Semiconductors does not give any representations or warranties as to the accuracy or completeness of information included herein and shall have no liability for the consequences of use of such information.

Short data sheet — A short data sheet is an extract from a full data sheet with the same product type number(s) and title. A short data sheet is intended for quick reference only and should not be relied upon to contain detailed and full information. For detailed and full information see the relevant full data sheet, which is available on request via the local NXP Semiconductors sales office. In case of any inconsistency or conflict with the short data sheet, the full data sheet shall prevail.

16.3 Disclaimers

General — Information in this document is believed to be accurate and reliable. However, NXP Semiconductors does not give any representations or warranties, expressed or implied, as to the accuracy or completeness of such information and shall have no liability for the consequences of use of such information.

Right to make changes — NXP Semiconductors reserves the right to make changes to information published in this document, including without limitation specifications and product descriptions, at any time and without notice. This document supersedes and replaces all information supplied prior to the publication hereof.

Suitability for use — NXP Semiconductors products are not designed, authorized or warranted to be suitable for use in medical, military, aircraft, space or life support equipment, nor in applications where failure or malfunction of an NXP Semiconductors product can reasonably be expected to result in personal injury, death or severe property or environmental damage. NXP Semiconductors accepts no liability for inclusion and/or use of NXP Semiconductors products in such equipment or applications and therefore such inclusion and/or use is at the customer's own risk.

Applications — Applications that are described herein for any of these products are for illustrative purposes only. NXP Semiconductors makes no representation or warranty that such applications will be suitable for the specified use without further testing or modification.

Limiting values — Stress above one or more limiting values (as defined in the Absolute Maximum Ratings System of IEC 60134) may cause permanent damage to the device. Limiting values are stress ratings only and operation of the device at these or any other conditions above those given in the Characteristics sections of this document is not implied. Exposure to limiting values for extended periods may affect device reliability.

Terms and conditions of sale — NXP Semiconductors products are sold subject to the general terms and conditions of commercial sale, as published at http://www.nxp.com/profile/terms, including those pertaining to warranty, intellectual property rights infringement and limitation of liability, unless explicitly otherwise agreed to in writing by NXP Semiconductors. In case of any inconsistency or conflict between information in this document and such terms and conditions, the latter will prevail.

No offer to sell or license — Nothing in this document may be interpreted or construed as an offer to sell products that is open for acceptance or the grant, conveyance or implication of any license under any copyrights, patents or other industrial or intellectual property rights.

16.4 Trademarks

Notice: All referenced brands, product names, service names and trademarks are the property of their respective owners.

17. Contact information

For more information, please visit: **http://www.nxp.com**

For sales office addresses, please send an email to: **salesaddresses@nxp.com**

© NXP B.V. 2008. All rights reserved.

18. Contents

1 General description 1
2 Features 1
3 Ordering information 1
4 Marking 2
5 Functional diagram 2
6 Pinning information 2
6.1 Pinning 2
6.2 Pin description 3
7 Functional description 3
8 Limiting values 3
9 Recommended operating conditions 4
10 Static characteristics 4
11 Dynamic characteristics 5
12 Waveforms 6
13 Package outline 8
14 Abbreviations 11
15 Revision history 11
16 Legal information 12
16.1 Data sheet status 12
16.2 Definitions 12
16.3 Disclaimers 12
16.4 Trademarks 12
17 Contact information 12
18 Contents 13

Please be aware that important notices concerning this document and the product(s) described herein, have been included in section 'Legal information'.

founded by PHILIPS

© NXP B.V. 2008. All rights reserved.

For more information, please visit: http://www.nxp.com
For sales office addresses, please send an email to: salesaddresses@nxp.com

Date of release: 2 July 2008
Document identifier: 74HC_HCT3G04_3

Общество с ограниченной ответственностью «МосЧип» ИНН 7719860671 / КПП 771901001
Адрес: 105318, г.Москва, ул.Щербаковская д.3, офис 1107

Данный компонент на территории Российской Федерации

Вы можете приобрести в компании MosChip.

Для оперативного оформления запроса Вам необходимо перейти по данной ссылке:

http://moschip.ru/get-element

Вы можете разместить у нас заказ для любого Вашего проекта, будь то серийное производство или разработка единичного прибора.

В нашем ассортименте представлены ведущие мировые производители активных и пассивных электронных компонентов.

Нашей специализацией является поставка электронной компонентной базы двойного назначения, продукции таких производителей как XILINX, Intel (ex.ALTERA), Vicor, Microchip, Texas Instruments, Analog Devices, Mini-Circuits, Amphenol, Glenair.

Сотрудничество с глобальными дистрибьюторами электронных компонентов, предоставляет возможность заказывать и получать с международных складов практически любой перечень компонентов в оптимальные для Вас сроки.

На всех этапах разработки и производства наши партнеры могут получить квалифицированную поддержку опытных инженеров.

Система менеджмента качества компании отвечает требованиям в соответствии с ГОСТ Р ИСО 9001, ГОСТ РВ 0015-002 и ЭС РД 009

Офис по работе с юридическими лицами:

105318, г.Москва, ул.Щербаковская д.3, офис 1107, 1118, ДЦ «Щербаковский»

Телефон: +7 495 668-12-70 (многоканальный)

Факс: +7 495 668-12-70 (доб.304)

E-mail: info@moschip.ru

Skype отдела продаж:
moschip.ru
moschip.ru_4
moschip.ru_6
moschip.ru_9