# Product Data Sheets

**C.27/4 Series**

**C.27/6 Series**

**C.27/7 Series**

**TYPICAL APPLICATIONS:**
the capacitor is used in series to the start-winding of the single-phase electric motor, allowing its starting and increasing the torque during work. Main application fields: air-fans, pumps, circulators, and low power electric motors. The choice of the capacitor depends on expected life length and the mechanicalconnection of the user.

**PRODUCT MARKING: TYPE A – EXAMPLE:**

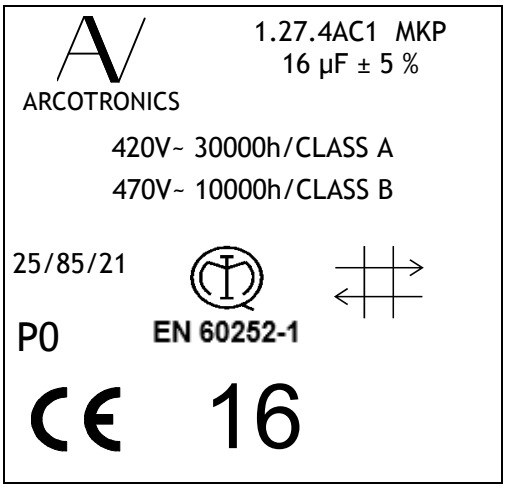


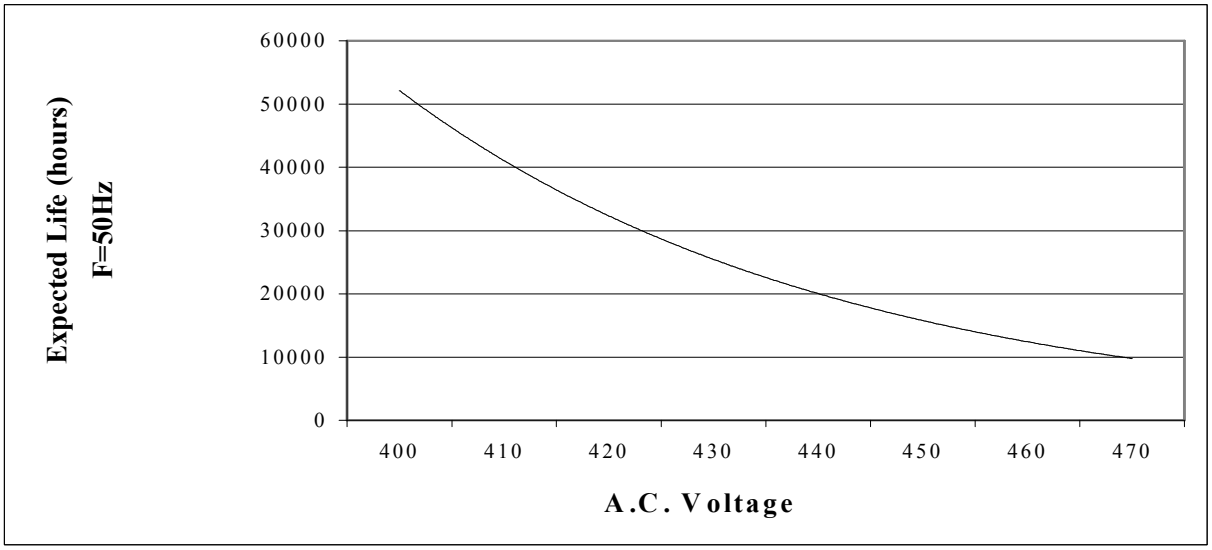


| GENERAL DATA | SIZES TABLES | FAST-ON | BIPOLAR CABLE | FLEXIBLE CABLE | STIFF UNIPOLAR CABLE | HIGH TEMPERATURE | DRAWINGS |
|---|---|---|---|---|---|---|---|
| **13** | **14** | **27** | **29** | **33** | **34** | **35** | **57** |

## General technical data:

| | |
|---|---|
| **Reference standards** | **IEC 252: 1993 EN 60252: 1994 CEI EN 60252: 1994** |
| EN 60 252-1 approval | **IMQ Testing and Certification Institute** |
| UL810 *"construction only"* | **Approved up 500 Vac** Standard Marking: 250Vac<br>Please contact us for other types of marking |
| Type of Service: | Continuous |
| Working class: | **CLASS A – 30.000 hours, 420 Volt a.c.**<br>**CLASS B – 10.000 hours, 470 Volt a.c.** |
| Min. / Max. Operating Temperature: | - 25 / 85 °C or – 25 / 100 °C (see page 35) |
| Storage Temperature: | - 40 / 90 °C |
| Rated voltage $V_R$ (a.c.): | 470 Volt a.c. |
| Rated frequency (Hz): | 50 - 60 Hz |
| Voltage rise/fall time (max): | 20 Volt / µs |
| Maximum Permissible Voltage: | 1.10 x Rated Voltage |
| Maximum Permissible Current: | 1.30 x Rated Current |
| Dissipation factor, Tgδ: | $20 \times 10^{-4}$ at 20°C, 50 Hz |
| Safety class: | P0 |
| Maximum Altitude: | 2000 m |
| Capacitance tolerance (standard): | ± 5 % |
| Mounting: | Any position |
| Can: | Polypropylene with self-extinguishing features V2 (UL94).<br>Noryl with self-extinguishing features VI (UL94) for diameters ≥ 50 mm |
| Disk: | Nylon PA66 with self-extinguishing features V0: fast-on execution.<br>PC-A with self-extinguishing features V0: cable execution<br>Noryl PPO with self-extinguishing features VI: for diameters ≥ 40mm cable execution |
| Filling Resin: | Polyurethane |
| Dielectric: | Polypropylene |
| Plates: | Self-healing metal layer |
| Test voltage terminal to terminal: | 2 Vn for 2 s |
| Test voltage terminal to can: | 2.000 Volt for 2 s |
| Leakage – Clearance in air between parts under voltage: | ≥ 5mm |
| Leakage – Clearance in air between parts under voltage and accessible metal parts: | ≥ 6mm |
| Vibration test: | IEC 68-2-6 |
| Max Tightening torque: | 5 Nm (M8) - 10 Nm (M12) |

## CASE WITH FIXING BOLT

| Rated Cap. | | Rated Current | Max dv/dt | Diameter | Height | Pack. | Diameter | Height | Pack. | Diameter | Height | Pack. | Weight |
|---|---|---|---|---|---|---|---|---|---|---|---|---|---|
| | | | | FAST-ON | | | BIPOLAR CABLE | | | UNIPOLAR | | | (FAST-ON) |
| µF | | A | V/µs | mm | mm | pcs | mm | mm | pcs | mm | mm | pcs | g |
| 1.0 | | 0.15 | 20 | 25 | 56.5 | 162 | 25 | 57 | 99 | 25 | 55 | 99 | 26 |
| 1.5 | | 0.22 | 20 | 25 | 56.5 | 162 | 25 | 57 | 99 | 25 | 55 | 99 | 26 |
| 2.0 | | 0.29 | 20 | 25 | 56.5 | 162 | 25 | 57 | 99 | 25 | 55 | 99 | 26 |
| 2.5 | | 0.37 | 20 | 25 | 56.5 | 162 | 25 | 57 | 99 | 25 | 55 | 99 | 26 |
| 3.0 | | 0.44 | 20 | 25 | 56.5 | 162 | 25 | 57 | 99 | 25 | 55 | 99 | 26 |
| 3.5 | | 0.52 | 20 | 30 | 56.5 | 110 | 30 | 57 | 68 | 30 | 55 | 68 | 38 |
| 4.0 | | 0.59 | 20 | 30 | 56.5 | 110 | 30 | 57 | 68 | 30 | 55 | 68 | 38 |
| 4.5 | | 0.66 | 20 | 30 | 56.5 | 110 | 30 | 57 | 68 | 30 | 55 | 68 | 38 |
| 5.0 | | 0.74 | 20 | 30 | 56.5 | 110 | 30 | 57 | 68 | 30 | 55 | 68 | 38 |
| 6.0 | | 0.88 | 20 | 35 | 56.5 | 86 | 35 | 57 | 52 | 35 | 55 | 52 | 52 |
| 6.3 | | 0.93 | 20 | 35 | 56.5 | 86 | 35 | 57 | 52 | 35 | 55 | 52 | 52 |
| 7.0 | | 1.03 | 20 | 35 | 56.5 | 86 | 35 | 57 | 52 | 35 | 55 | 52 | 52 |
| 8.0 | | 1.18 | 20 | 35 | 56.5 | 86 | 35 | 57 | 52 | 35 | 55 | 52 | 52 |
| 9.0 | | 1.33 | 20 | 35 | 73.5 | 86 | 35 | 71.5 | 52 | 35 | 69.5 | 52 | 68 |
| 10.0 | | 1.47 | 20 | 35 | 73.5 | 86 | 35 | 71.5 | 52 | 35 | 69.5 | 52 | 68 |
| 12.0 | | 1.77 | 20 | 35 | 73.5 | 86 | 35 | 71.5 | 52 | 35 | 69.5 | 52 | 68 |
| 12.5 | | 1.84 | 20 | 35 | 73.5 | 86 | 35 | 71.5 | 52 | 35 | 69.5 | 52 | 68 |
| 14.0 | | 2.07 | 20 | 40 | 73.5 | 60 | 40 | 71.5 | 30 | 40 | 69.5 | 30 | 88 |
| 16.0 | | 2.36 | 20 | 40 | 73.5 | 60 | 40 | 71.5 | 30 | 40 | 69.5 | 30 | 88 |
| 18.0 | | 2.66 | 20 | 45 | 74 | 50 | 45 | 71.5 | 30 | 45 | 69.5 | 30 | 112 |
| 20.0 | | 2.95 | 20 | 45 | 74 | 50 | 45 | 71.5 | 39 | 45 | 69.5 | 39 | 112 |
| 22.0 | | 3.25 | 20 | 45 | 74 | 50 | 45 | 71.5 | 39 | 45 | 69.5 | 39 | 112 |
| 25.0 | | 3.69 | 20 | 45 | 94.5 | 44 | 45 | 95 | 30 | 45 | 93 | 30 | 142 |
| 30.0 | | 4.43 | 20 | 45 | 94.5 | 44 | 45 | 95 | 30 | 45 | 93 | 30 | 142 |
| 31.5 | | 4.65 | 20 | 45 | 94.5 | 44 | 45 | 95 | 30 | 45 | 93 | 30 | 142 |
| 35.0 | | 5.16 | 20 | 50 | 96 | 40 | 50 | 96.5 | 25 | 50 | 94.5 | 25 | 178 |
| 40.0 | | 5.90 | 20 | 50 | 121 | 40 | 50 | 121.5 | 25 | 50 | 119.5 | 25 | 224 |
| 45.0 | | 6.64 | 20 | 50 | 121 | 40 | 50 | 121.5 | 25 | 50 | 119.5 | 25 | 224 |
| 50.0 | Θ | 7.38 | 20 | 50 | 121 | 40 | 60 | 121.5 | 16 | 60 | 119.5 | 16 | 224 |
| 55.0 | Θ | 8.12 | 20 | 55 | 120 | 32 | 60 | 120.5 | 16 | 60 | 118.5 | 16 | 271 |
| 60.0 | Θ | 8.85 | 20 | 55 | 120 | 32 | 60 | 120.5 | 16 | 60 | 118.5 | 16 | 271 |

Θ Capacitor produced according to EN 60252-1 standard with Arcotronics self-certification

## CASE WITHOUT FIXING BOLT

| Rated Cap. | | Rated Current | Max dv/dt | Diameter | Height | Pack. | Diameter | Height | Pack. | Diameter | Height | Pack. | Weight |
|---|---|---|---|---|---|---|---|---|---|---|---|---|---|
| | | | | FAST-ON | | | BIPOLAR CABLE | | | UNIPOLAR | | | (FAST-ON) |
| µF | | A | V/µs | mm | mm | pcs | mm | mm | pcs | mm | mm | pcs | g |
| 1.0 | | 0.15 | 20 | 25 | 56.5 | 162 | 25 | 57 | 99 | 25 | 55 | 99 | 26 |
| 1.5 | | 0.22 | 20 | 25 | 56.5 | 162 | 25 | 57 | 99 | 25 | 55 | 99 | 26 |
| 2.0 | | 0.29 | 20 | 25 | 56.5 | 162 | 25 | 57 | 99 | 25 | 55 | 99 | 26 |
| 2.5 | | 0.37 | 20 | 25 | 56.5 | 162 | 25 | 57 | 99 | 25 | 55 | 99 | 26 |
| 3.0 | | 0.44 | 20 | 25 | 56.5 | 162 | 25 | 57 | 99 | 25 | 55 | 99 | 26 |
| 3.5 | | 0.52 | 20 | 30 | 56.5 | 110 | 30 | 57 | 68 | 30 | 55 | 68 | 38 |
| 4.0 | | 0.59 | 20 | 30 | 56.5 | 110 | 30 | 57 | 68 | 30 | 55 | 68 | 38 |
| 4.5 | | 0.66 | 20 | 30 | 56.5 | 110 | 30 | 57 | 68 | 30 | 55 | 68 | 38 |
| 5.0 | | 0.74 | 20 | 30 | 56.5 | 110 | 30 | 57 | 68 | 30 | 55 | 68 | 38 |
| 6.0 | | 0.88 | 20 | 35 | 56.5 | 86 | 35 | 57 | 52 | 35 | 55 | 52 | 52 |
| 6.3 | | 0.93 | 20 | 35 | 56.5 | 86 | 35 | 57 | 52 | 35 | 55 | 52 | 52 |
| 7.0 | | 1.03 | 20 | 35 | 56.5 | 86 | 35 | 57 | 52 | 35 | 55 | 52 | 52 |
| 8.0 | | 1.18 | 20 | 35 | 56.5 | 86 | 35 | 57 | 52 | 35 | 55 | 52 | 52 |
| 9.0 | | 1.33 | 20 | 35 | 73.5 | 86 | 35 | 71.5 | 52 | 35 | 69.5 | 52 | 68 |
| 10.0 | | 1.47 | 20 | 35 | 73.5 | 86 | 35 | 71.5 | 52 | 35 | 69.5 | 52 | 68 |
| 12.0 | | 1.77 | 20 | 35 | 73.5 | 86 | 35 | 71.5 | 52 | 35 | 69.5 | 52 | 68 |
| 12.5 | | 1.84 | 20 | 35 | 73.5 | 86 | 35 | 71.5 | 52 | 35 | 69.5 | 52 | 68 |
| 14.0 | | 2.07 | 20 | 40 | 73.5 | 60 | 40 | 71.5 | 39 | 40 | 69.5 | 39 | 88 |
| 16.0 | | 2.36 | 20 | 40 | 73.5 | 60 | 40 | 71.5 | 39 | 40 | 69.5 | 39 | 88 |
| 18.0 | | 2.66 | 20 | 45 | 74 | 50 | 45 | 71.5 | 30 | 45 | 69.5 | 30 | 112 |
| 20.0 | | 2.95 | 20 | 45 | 74 | 50 | 45 | 71.5 | 30 | 45 | 69.5 | 30 | 112 |
| 22.0 | | 3.25 | 20 | 45 | 74 | 50 | 45 | 71.5 | 30 | 45 | 69.5 | 30 | 112 |
| 25.0 | | 3.69 | 20 | 45 | 94.5 | 44 | 45 | 95 | 30 | 45 | 93 | 30 | 142 |
| 30.0 | | 4.43 | 20 | 45 | 94.5 | 44 | 45 | 95 | 30 | 45 | 93 | 30 | 142 |
| 31.5 | | 4.65 | 20 | 45 | 94.5 | 44 | 45 | 95 | 30 | 45 | 93 | 30 | 142 |
| 35.0 | | 5.16 | 20 | 50 | 94.5 | 40 | 50 | 95 | 25 | 50 | 93 | 25 | 198 |
| 40.0 | | 5.90 | 20 | 50 | 118.5 | 40 | 50 | 119 | 25 | 50 | 117 | 25 | 224 |
| 45.0 | | 6.64 | 20 | 50 | 118.5 | 40 | 50 | 119 | 25 | 50 | 117 | 25 | 224 |
| 50.0 | Θ | 7.38 | 20 | 50 | 118.5 | 40 | 60 | 119 | 16 | 60 | 117 | 16 | 224 |
| 55.0 | Θ | 8.12 | 20 | 55 | 118.5 | 32 | 60 | 119 | 16 | 60 | 117 | 16 | 271 |
| 60.0 | Θ | 8.85 | 20 | 55 | 118.5 | 32 | 60 | 119 | 16 | 60 | 117 | 16 | 271 |

Θ Capacitor produced according to EN60252-1 standard with Arcotronics self-certification

## CASE WITH QUICK FITTING DEVICE

| Rated Cap. | Rated Current | Max dv/dt | Diameter | Height | Pack. | Diameter | Height | Pack. | Diameter | Height | Pack. | Weight |
|---|---|---|---|---|---|---|---|---|---|---|---|---|
| | | | FAST-ON | | | BIPOLAR CABLE | | | UNIPOLAR | | | (FAST-ON) |
| µF | A | V/µs | mm | mm | pcs | mm | mm | pcs | mm | mm | pcs | g |
| 1.0 | 0.15 | 20 | 25 | 56.5 | 99 | 25 | 57 | 99 | 25 | 55 | 99 | 26 |
| 1.5 | 0.22 | 20 | 25 | 56.5 | 99 | 25 | 57 | 99 | 25 | 55 | 99 | 26 |
| 2.0 | 0.29 | 20 | 25 | 56.5 | 99 | 25 | 57 | 99 | 25 | 55 | 99 | 26 |
| 2.5 | 0.37 | 20 | 25 | 56.5 | 99 | 25 | 57 | 99 | 25 | 55 | 99 | 26 |
| 3.0 | 0.44 | 20 | 25 | 56.5 | 99 | 25 | 57 | 99 | 25 | 55 | 99 | 26 |
| 3.5 | 0.52 | 20 | 30 | 56.5 | 68 | 30 | 57 | 68 | 30 | 55 | 68 | 38 |
| 4.0 | 0.59 | 20 | 30 | 56.5 | 68 | 30 | 57 | 68 | 30 | 55 | 68 | 38 |
| 4.5 | 0.66 | 20 | 30 | 56.5 | 68 | 30 | 57 | 68 | 30 | 55 | 68 | 38 |
| 5.0 | 0.74 | 20 | 30 | 56.5 | 68 | 30 | 57 | 68 | 30 | 55 | 68 | 38 |
| 6.0 | 0.88 | 20 | 35 | 56.5 | 52 | 35 | 57 | 52 | 35 | 55 | 52 | 52 |
| 6.3 | 0.93 | 20 | 35 | 56.5 | 52 | 35 | 57 | 52 | 35 | 55 | 52 | 52 |
| 7.0 | 1.03 | 20 | 35 | 56.5 | 52 | 35 | 57 | 52 | 35 | 55 | 52 | 52 |
| 8.0 | 1.18 | 20 | 35 | 56.5 | 52 | 35 | 57 | 52 | 35 | 55 | 52 | 52 |
| 9.0 | 1.33 | 20 | 35 | 73.5 | 52 | | | | | | | 68 |
| 10.0 | 1.47 | 20 | 35 | 73.5 | 52 | | | | | | | 68 |
| 12.0 | 1.77 | 20 | 35 | 73.5 | 52 | | | | | | | 68 |
| 12.5 | 1.84 | 20 | 35 | 73.5 | 52 | | | | | | | 68 |

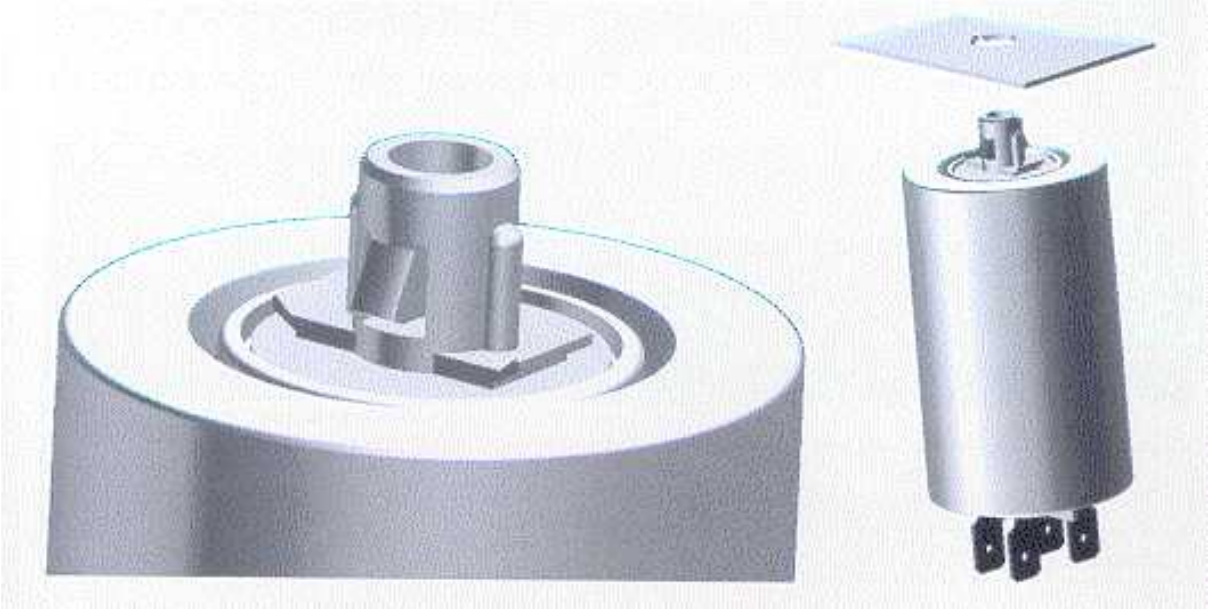

# C.27/6

**TYPICAL APPLICATIONS:** the capacitor is used in series to the start-winding of the single-phase electric motor, allowing its starting and increasing the torque during work. C.27/6 series is particularly suitable for low voltage applications and medium expected life. Main application fields: air-fans, pumps, circulators, low power electric motor.

**PRODUCT MARKING: TYPE C – EXAMPLE:**

ARCOTRONICS

1.27.6CC2 MKP
5 µF ± 5 %

420V~ 10000h/CLASS B
470V~ 3000h/CLASS C

25/85/21

P0

EN 60252-1

CE 5

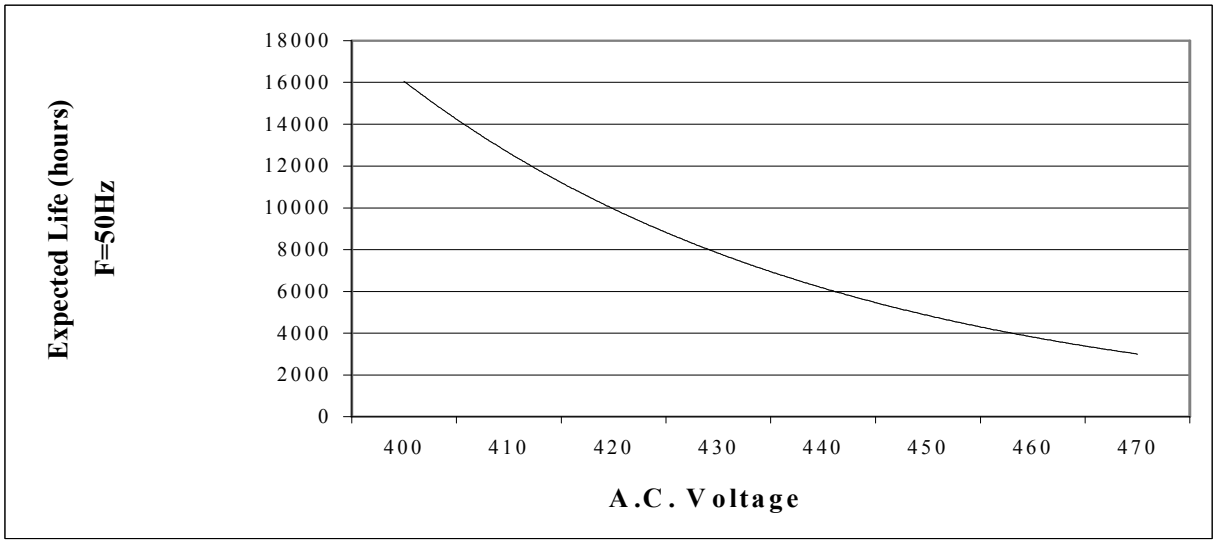


| GENERAL DATA | SIZES TABLES | FAST-ON | BIPOLAR CABLE | FLEXIBLE CABLE | STIFF UNIPOLAR CABLE | DRAWINGS |
|---|---|---|---|---|---|---|
| 18 | 19 | 27 | 29 | 33 | 34 | 57 |

## General technical data:

| | |
|---|---|
| **Reference standards** | **IEC 252: 1993 EN 60252: 1994 CEI EN 60252: 1994** |
| EN 60 252-1 approval | **IMQ Testing and Certification Institute** |
| UL810 "*construction only*" | **Approved up 500 Vac** Standard Marking: 250Vac Please contact us for other types of marking |
| Great Wall approval (China) | |
| Type of Service: | Continuous |
| Working class: | **CLASS B – 10.000 hours, 420 Volt a.c.**<br>**CLASS C – 3.000 hours, 470 Volt a.c.** |
| Min. / Max. Operating Temperature: | - 25 / 85 °C |
| Storage Temperature: | - 40 / 90 °C |
| Rated voltage Vn (a.c.): | 470 Volt a.c. |
| Rated frequency (Hz): | 50 - 60 Hz |
| Voltage rise/fall time (max): | 15 Volt / µs |
| Maximum Permissible Voltage: | 1.10 x Rated Voltage |
| Maximum Permissible Current: | 1.30 x Rated Current |
| Dissipation factor, Tgδ: | $20 \times 10^{-4}$ at 20°C, 50 Hz |
| Safety class: | P0 |
| Maximum Altitude: | 2000 m |
| Capacitance tolerance (standard): | ± 5 % |
| Mounting: | Any position |
| Can: | Polypropylene with self-extinguishing features V2 (UL94).<br>Noryl with self-extinguishing features VI (UL94) for diameters ≥50 mm |
| Disk: | Nylon PA66 with self-extinguishing features V0: fast-on execution.<br>PC-A with self-extinguishing features V0: cable execution<br>Noryl PPO with self-extinguishing features VI: for diameters ≥40mm cable execution |
| Filling Resin: | Polyurethane |
| Dielectric: | Polypropylene |
| Plates: | Self-healing metal layer |
| Test voltage terminal to terminal: | 2 Vn for 2 s |
| Test voltage terminal to can: | 2.000 Volt for 2 s |
| Leakage – Clearance in air between parts under voltage: | ≥ 5mm |
| Leakage – Clearance in air between parts under voltage and accessible metal parts: | ≥ 6mm |
| Vibration test: | IEC 68-2-6 |
| Max Tightening torque: | 5 Nm (M8) - 10 Nm (M12) |

## CASE WITH FIXING BOLT

| Rated Cap. | | Rated Current | Max dv/dt | Diameter | Height | Pack. | Diameter | Height | Pack. | Diameter | Height | Pack. | Weight |
|---|---|---|---|---|---|---|---|---|---|---|---|---|---|
| | | | | FAST-ON | | | BIPOLAR CABLE | | | UNIPOLAR | | | (FAST-ON) |
| µF | | A | V/µs | mm | mm | pcs | mm | mm | pcs | mm | mm | pcs | g |
| 1.0 | | 0.15 | 15 | 25 | 56.5 | 162 | 25 | 57 | 99 | 25 | 55 | 99 | 26 |
| 1.5 | | 0.22 | 15 | 25 | 56.5 | 162 | 25 | 57 | 99 | 25 | 55 | 99 | 26 |
| 2.0 | | 0.29 | 15 | 25 | 56.5 | 162 | 25 | 57 | 99 | 25 | 55 | 99 | 26 |
| 2.5 | | 0.37 | 15 | 25 | 56.5 | 162 | 25 | 57 | 99 | 25 | 55 | 99 | 26 |
| 3.0 | | 0.44 | 15 | 25 | 56.5 | 162 | 25 | 57 | 99 | 25 | 55 | 99 | 26 |
| 3.5 | | 0.52 | 15 | 25 | 56.5 | 162 | 25 | 57 | 99 | 25 | 55 | 99 | 26 |
| 4.0 | | 0.59 | 15 | 25 | 56.5 | 162 | 25 | 57 | 99 | 25 | 55 | 99 | 26 |
| 4.5 | | 0.66 | 15 | 30 | 56.5 | 110 | 30 | 57 | 68 | 30 | 55 | 68 | 38 |
| 5.0 | | 0.74 | 15 | 30 | 56.5 | 110 | 30 | 57 | 68 | 30 | 55 | 68 | 38 |
| 6.0 | | 0.88 | 15 | 30 | 56.5 | 110 | 30 | 57 | 68 | 30 | 55 | 68 | 38 |
| 6.3 | | 0.93 | 15 | 30 | 56.5 | 110 | 30 | 57 | 68 | 30 | 55 | 68 | 38 |
| 7.0 | | 1.03 | 15 | 30 | 56.5 | 110 | 30 | 57 | 68 | 30 | 55 | 68 | 38 |
| 8.0 | | 1.18 | 15 | 35 | 56.5 | 86 | 35 | 57 | 52 | 35 | 55 | 52 | 52 |
| 9.0 | | 1.33 | 15 | 35 | 56.5 | 86 | 35 | 57 | 52 | 35 | 55 | 52 | 52 |
| 10.0 | | 1.47 | 15 | 35 | 56.5 | 86 | 35 | 57 | 52 | 35 | 55 | 52 | 52 |
| 12.0 | | 1.77 | 15 | 35 | 73.5 | 86 | 35 | 71,5 | 52 | 35 | 69.5 | 52 | 68 |
| 12.5 | | 1.84 | 15 | 35 | 73.5 | 86 | 35 | 71.5 | 52 | 35 | 69.5 | 52 | 68 |
| 14.0 | | 2.07 | 15 | 35 | 73.5 | 86 | 35 | 71.5 | 52 | 35 | 69.5 | 52 | 68 |
| 16.0 | | 2.36 | 15 | 35 | 73.5 | 86 | 35 | 71.5 | 52 | 35 | 69.5 | 52 | 68 |
| 18.0 | | 2.66 | 15 | 40 | 73.5 | 60 | 40 | 71.5 | 39 | 40 | 69.5 | 39 | 88 |
| 20.0 | | 2.95 | 15 | 40 | 73.5 | 60 | 40 | 71.5 | 39 | 40 | 69.5 | 39 | 88 |
| 22.0 | | 3.25 | 15 | 40 | 73.5 | 60 | 40 | 71.5 | 39 | 40 | 69.5 | 39 | 88 |
| 25.0 | | 3.69 | 15 | 45 | 74 | 50 | 45 | 71.5 | 30 | 45 | 69.5 | 30 | 112 |
| 30.0 | | 4.43 | 15 | 45 | 74 | 50 | 45 | 71.5 | 30 | 45 | 69.5 | 30 | 112 |
| 31.5 | | 4.65 | 15 | 45 | 94.5 | 44 | 45 | 95 | 30 | 45 | 93 | 30 | 142 |
| 35.0 | | 5.16 | 15 | 45 | 94.5 | 44 | 45 | 95 | 30 | 45 | 93 | 30 | 142 |
| 40.0 | | 5.90 | 15 | 45 | 94.5 | 44 | 45 | 95 | 30 | 45 | 93 | 30 | 142 |
| 45.0 | | 6.64 | 15 | 50 | 96 | 40 | 50 | 96.5 | 25 | 50 | 94.5 | 25 | 178 |
| 50.0 | | 7.38 | 15 | 50 | 121 | 40 | 50 | 121.5 | 25 | 50 | 119.5 | 25 | 224 |
| 55.0 | | 8.12 | 15 | 50 | 121 | 40 | 50 | 121.5 | 25 | 50 | 119.5 | 25 | 224 |
| 60.0 | Θ | 8.85 | 15 | 50 | 121 | 40 | 50 | 121.5 | 25 | 50 | 119.5 | 25 | 224 |
| 65.0 | Θ | 9.60 | 15 | 50 | 121 | 40 | 50 | 121.5 | 25 | 50 | 119.5 | 25 | 224 |
| 70.0 | Θ | 10.30 | 15 | 50 | 121 | 40 | 50 | 121.5 | 25 | 50 | 119.5 | 25 | 224 |

Θ Capacitor produced according to EN60252-1 standard with Arcotronics self-certification

## CASE WITHOUT FIXING BOLT

| Rated Cap. | | Rated Current | Max dv/dt | Diameter | Height | Pack. | Diameter | Height | Pack. | Diameter | Height | Pack. | Weight |
|---|---|---|---|---|---|---|---|---|---|---|---|---|---|
| | | | | FAST-ON | | | BIPOLAR CABLE | | | UNIPOLAR | | | (FAST-ON) |
| µF | | A | V/µs | mm | mm | pcs | mm | mm | pcs | mm | mm | pcs | g |
| 1.0 | | 0.15 | 15 | 25 | 56.5 | 162 | 25 | 57 | 99 | 25 | 55 | 99 | 26 |
| 1.5 | | 0.22 | 15 | 25 | 56.5 | 162 | 25 | 57 | 99 | 25 | 55 | 99 | 26 |
| 2.0 | | 0.29 | 15 | 25 | 56.5 | 162 | 25 | 57 | 99 | 25 | 55 | 99 | 26 |
| 2.5 | | 0.37 | 15 | 25 | 56.5 | 162 | 25 | 57 | 99 | 25 | 55 | 99 | 26 |
| 3.0 | | 0.44 | 15 | 25 | 56.5 | 162 | 25 | 57 | 99 | 25 | 55 | 99 | 26 |
| 3.5 | | 0.52 | 15 | 25 | 56.5 | 162 | 25 | 57 | 99 | 25 | 55 | 99 | 26 |
| 4.0 | | 0.59 | 15 | 25 | 56.5 | 162 | 25 | 57 | 99 | 25 | 55 | 99 | 26 |
| 4.5 | | 0.66 | 15 | 30 | 56.5 | 110 | 30 | 57 | 68 | 30 | 55 | 68 | 38 |
| 5.0 | | 0.74 | 15 | 30 | 56.5 | 110 | 30 | 57 | 68 | 30 | 55 | 68 | 38 |
| 6.0 | | 0.88 | 15 | 30 | 56.5 | 110 | 30 | 57 | 68 | 30 | 55 | 68 | 38 |
| 6.3 | | 0.93 | 15 | 30 | 56.5 | 110 | 30 | 57 | 68 | 30 | 55 | 68 | 38 |
| 7.0 | | 1.03 | 15 | 30 | 56.5 | 110 | 30 | 57 | 68 | 30 | 55 | 68 | 38 |
| 8.0 | | 1.18 | 15 | 35 | 56.5 | 86 | 35 | 57 | 52 | 35 | 55 | 52 | 52 |
| 9.0 | | 1.33 | 15 | 35 | 56.5 | 86 | 35 | 57 | 52 | 35 | 55 | 52 | 68 |
| 10.0 | | 1.47 | 15 | 35 | 56.5 | 86 | 35 | 57 | 52 | 35 | 55 | 52 | 68 |
| 12.0 | | 1.77 | 15 | 35 | 73.5 | 86 | 35 | 71.5 | 52 | 35 | 69.5 | 52 | 68 |
| 12.5 | | 1.84 | 15 | 35 | 73.5 | 86 | 35 | 71.5 | 52 | 35 | 69.5 | 52 | 68 |
| 14.0 | | 2.07 | 15 | 35 | 73.5 | 86 | 35 | 71.5 | 52 | 35 | 69.5 | 52 | 68 |
| 16.0 | | 2.36 | 15 | 35 | 73.5 | 86 | 35 | 71.5 | 52 | 35 | 69.5 | 52 | 68 |
| 18.0 | | 2.66 | 15 | 40 | 73.5 | 60 | 40 | 71.5 | 39 | 40 | 69.5 | 39 | 88 |
| 20.0 | | 2.95 | 15 | 40 | 73.5 | 60 | 40 | 71.5 | 39 | 40 | 69.5 | 39 | 88 |
| 22.0 | | 3.25 | 15 | 40 | 73.5 | 60 | 40 | 71.5 | 39 | 40 | 69.5 | 39 | 88 |
| 25.0 | | 3.69 | 15 | 45 | 74 | 50 | 45 | 71.5 | 30 | 45 | 69.5 | 30 | 112 |
| 30.0 | | 4.43 | 15 | 45 | 74 | 50 | 45 | 71.5 | 30 | 45 | 69.5 | 30 | 112 |
| 31.5 | | 4.65 | 15 | 45 | 94.5 | 44 | 45 | 95 | 30 | 45 | 93 | 30 | 142 |
| 35.0 | | 5.16 | 15 | 45 | 94.5 | 44 | 45 | 95 | 30 | 45 | 93 | 30 | 142 |
| 40.0 | | 5.90 | 15 | 45 | 94.5 | 44 | 45 | 95 | 30 | 45 | 93 | 30 | 142 |
| 45.0 | | 6.64 | 15 | 50 | 94.5 | 40 | 50 | 95 | 25 | 50 | 93 | 25 | 178 |
| 50.0 | | 7.38 | 15 | 50 | 118.5 | 40 | 50 | 119 | 25 | 50 | 117 | 25 | 224 |
| 55.0 | | 8.12 | 15 | 50 | 118.5 | 40 | 50 | 119 | 25 | 50 | 117 | 25 | 224 |
| 60.0 | Θ | 8.85 | 15 | 50 | 118.5 | 40 | 50 | 119 | 25 | 50 | 117 | 25 | 224 |
| 65.0 | Θ | 9.60 | 15 | 50 | 118.5 | 40 | 50 | 119 | 25 | 50 | 117 | 25 | 224 |
| 70.0 | Θ | 10.30 | 15 | 50 | 118.5 | 40 | 50 | 119 | 25 | 50 | 117 | 25 | 224 |

Θ Capacitor produced according EN60252-1 standard with Arcotronics self-certification

## CASE WITH QUICK FITTING DEVICE

| Rated Cap. | Rated Current | Max dv/dt | Diameter | Height | Pack. | Diameter | Height | Pack. | Diameter | Height | Pack. | Weight |
|---|---|---|---|---|---|---|---|---|---|---|---|---|
| | | | FAST-ON | | | BIPOLAR CABLE | | | UNIPOLAR | | | (FAST-ON) |
| µF | A | V/µs | mm | mm | pcs | mm | mm | pcs | mm | mm | pcs | g |
| 1.0 | 0.15 | 15 | 25 | 56.5 | 297 | 25 | 57 | 99 | 25 | 55 | 99 | 26 |
| 1.5 | 0.22 | 15 | 25 | 56.5 | 297 | 25 | 57 | 99 | 25 | 55 | 99 | 26 |
| 2.0 | 0.29 | 15 | 25 | 56.5 | 297 | 25 | 57 | 99 | 25 | 55 | 99 | 26 |
| 2.5 | 0.37 | 15 | 25 | 56.5 | 297 | 25 | 57 | 99 | 25 | 55 | 99 | 26 |
| 3.0 | 0.44 | 15 | 25 | 56.5 | 297 | 25 | 57 | 99 | 25 | 55 | 99 | 26 |
| 3.5 | 0.52 | 15 | 25 | 56.5 | 207 | 25 | 57 | 99 | 25 | 55 | 99 | 26 |
| 4.0 | 0.59 | 15 | 25 | 56.5 | 297 | 25 | 57 | 99 | 25 | 55 | 99 | 26 |
| 4.5 | 0.66 | 15 | 30 | 56.5 | 204 | 30 | 57 | 68 | 30 | 55 | 68 | 38 |
| 5.0 | 0.74 | 15 | 30 | 56.5 | 204 | 30 | 57 | 68 | 30 | 55 | 68 | 38 |
| 6.0 | 0.88 | 15 | 30 | 56.5 | 204 | 30 | 57 | 68 | 30 | 55 | 68 | 38 |
| 6.3 | 0.93 | 15 | 30 | 56.5 | 204 | 30 | 57 | 68 | 30 | 55 | 68 | 38 |
| 7.0 | 1.03 | 15 | 30 | 56.5 | 204 | 30 | 57 | 68 | 30 | 55 | 68 | 38 |
| 8.0 | 1.18 | 15 | 35 | 56.5 | 136 | 35 | 57 | 52 | 35 | 55 | 52 | 52 |
| 9.0 | 1.33 | 15 | 35 | 56.5 | 136 | 35 | 57 | 52 | 35 | 55 | 52 | 68 |
| 10.0 | 1.47 | 15 | 35 | 56.5 | 136 | 35 | 57 | 52 | 35 | 55 | 52 | 68 |
| 12.0 | 1.77 | 15 | 35 | 73.5 | 104 | | | | | | | 68 |
| 12.5 | 1.84 | 15 | 35 | 73.5 | 104 | | | | | | | 68 |
| 14.0 | 2.07 | 15 | 35 | 73.5 | 104 | | | | | | | 68 |

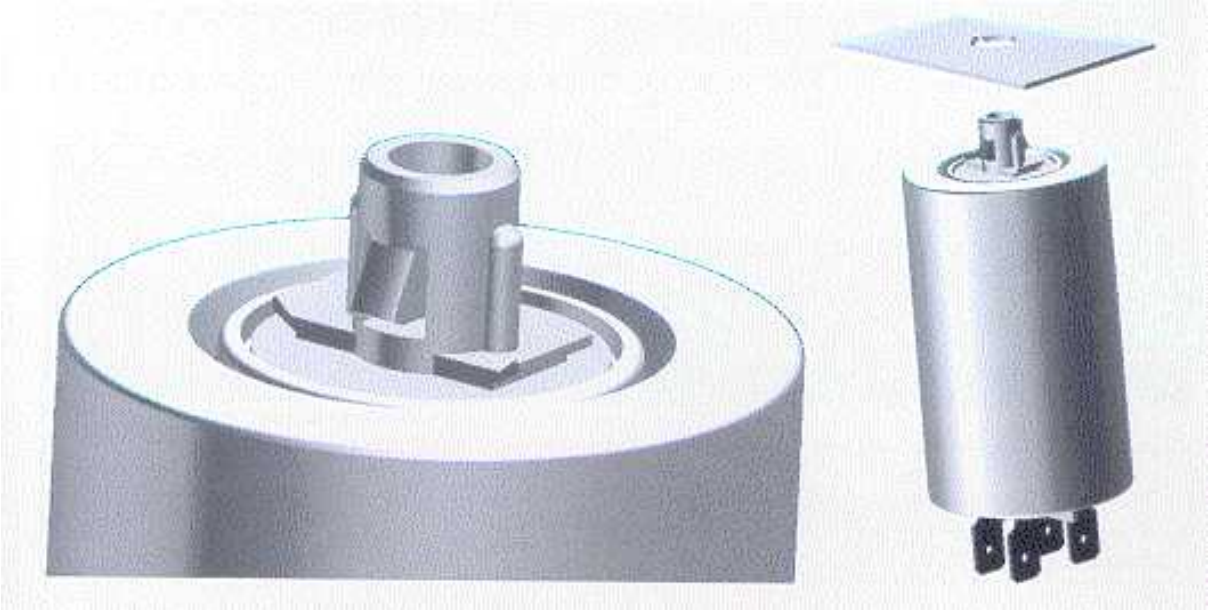

**TYPICAL APPLICATIONS:** the capacitor is used in series to the start-winding of the single-phase electric motor, allowing its starting and increasing the torque during work. This series is suitable for low voltage application and medium expected life. Main application fields: air-fans, rolling shutters motors, and battery chargers.

**MARKING PRODUCT: TYPE L – EXAMPLE:**

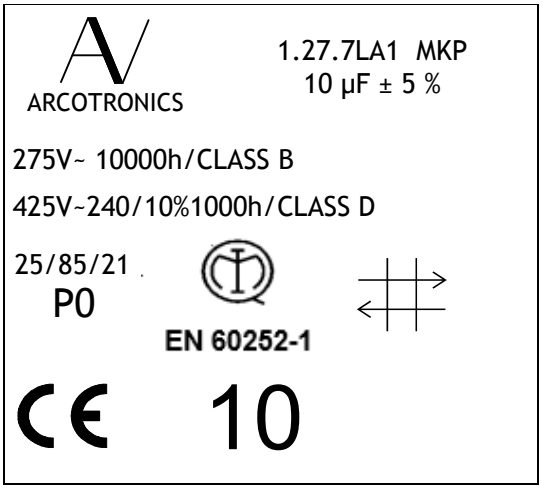


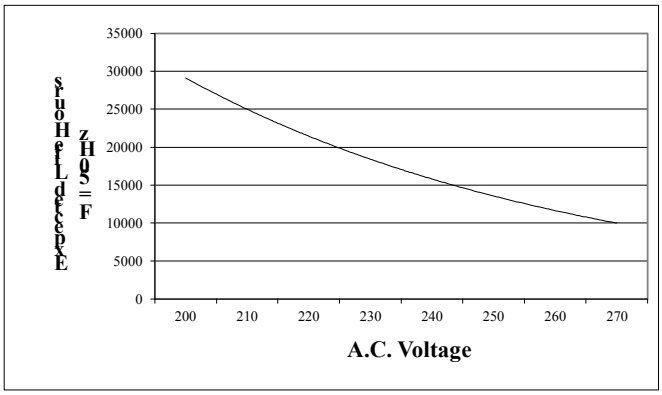


| GENERAL DATA | SIZES TABLES | FAST-ON | BIPOLAR CABLE | FLEXIBLE CABLE | STIFF UNIPOLAR CABLE | DRAWINGS |
|---|---|---|---|---|---|---|
| **23** | **24** | **27** | **29** | **33** | **34** | **57** |

## General technical data:

| | |
|---|---|
| **Reference standards** | **IEC 252: 1993 EN 60252: 1994** |
| EN 60 252-1 approval | **IMQ standard institute** |
| UL810 *"construction only"* | **Approved up 500 Vac** Standard Marking: 250Vac<br>Please contact us for other types of marking |
| Type of working: | Continuous |
| Working class: | **CLASS B - 10.000 hours, 275 Volt a.c.**<br>**Continuous working** |
| | **CLASS D - 1.000 hours, 425 Volt a.c.**<br>**Intermittent Working 24min/240min** |
| Temperature: Operating Min. / Max.: | - 40 / 85 °C or – 25 / 85 °C |
| Storage: | - 40 / 90 °C |
| Rated voltage Vn (a.c.): | 275Volt a.c. |
| Intermittent voltage Vn (ac) | 425 Volt – 24 minutes every 4 hours |
| Rated frequency (Hz): | 50 - 60 Hz |
| Voltage rise/fall time (max): | 15 Volt / µs |
| Maximum Permissible Voltage: | 1.10 x Rated Voltage |
| Maximum Permissible Current: | 1.30 x Rated Current |
| Dissipation factor Tgδ: | $20 \times 10^{-4}$ at 20°C, 50 Hz |
| Safety class: | P0 |
| Maximum altitude: | 2000 m |
| Capacitance tolerance (standard): | ± 5 % |
| Mounting: | Any position |
| Case: | Plastic Material with self-extinguishing features V2 (UL94).<br>Noryl with self-extinguishing features V1 (UL94 standard) for diameters ≥ 50 mm |
| Disk: | Nylon PA66 with self-extinguishing features V0: fast-on execution.<br>PC-A with self-extinguishing features V0: cable execution<br>Noryl PPO with self-extinguishing features V1: for diameters ≥ 40mm cable execution |
| Dielectric: | Polypropylene |
| Plates: | Self-healing metal layer |
| Voltage test terminal to terminal: | 2 Vn for 2 s Continuous working / 1.5 Intermittent working |
| Voltage test terminal to case: | 2.000 Volt for 2 s |
| Leakage – Clearance in air between parts under voltage: | ≥ 5mm |
| Leakage – Clearance in air between parts under voltage and accessible metal parts: | ≥ 6mm |
| Vibration test: | IEC 68-2-6 |
| Max Tightening torque: | 5 Nm (M8) - 10 Nm (M12) |

## CASE WITH FIXING BOLT

| Rated Cap. | | Rated Current | Max dv/dt | Diameter | Height | Pack. | Diameter | Height | Pack. | Diameter | Height | Pack. | Weight |
|---|---|---|---|---|---|---|---|---|---|---|---|---|---|
| | | | | FAST-ON | | | BIPOLAR CABLE | | | UNIPOLAR | | | (FAST-ON) |
| µF | | A | V/µs | mm | mm | pcs | mm | mm | pcs | mm | mm | pcs | g |
| 1.0 | | 0.1 | 15 | 25 | 56.5 | 162 | 25 | 57 | 99 | 25 | 55 | 99 | 26 |
| 1.5 | | 0.1 | 15 | 25 | 56.5 | 162 | 25 | 57 | 99 | 25 | 55 | 99 | 26 |
| 2.0 | | 0.2 | 15 | 25 | 56.5 | 162 | 25 | 57 | 99 | 25 | 55 | 99 | 26 |
| 2.5 | | 0.2 | 15 | 25 | 56.5 | 162 | 25 | 57 | 99 | 25 | 55 | 99 | 26 |
| 3.0 | | 0.3 | 15 | 25 | 56.5 | 162 | 25 | 57 | 99 | 25 | 55 | 99 | 26 |
| 3.5 | | 0.3 | 15 | 25 | 56.5 | 162 | 25 | 57 | 99 | 25 | 55 | 99 | 26 |
| 4.0 | | 0.3 | 15 | 25 | 56.5 | 162 | 25 | 57 | 99 | 25 | 55 | 99 | 26 |
| 4.5 | | 0.3 | 15 | 25 | 56.5 | 162 | 25 | 57 | 99 | 25 | 55 | 99 | 26 |
| 5.0 | | 0.4 | 15 | 25 | 56.5 | 162 | 25 | 57 | 99 | 25 | 55 | 99 | 26 |
| 6.0 | | 0.5 | 15 | 30 | 56.5 | 110 | 30 | 57 | 68 | 30 | 55 | 68 | 38 |
| 6.3 | | 0.5 | 15 | 30 | 56.5 | 110 | 30 | 57 | 68 | 30 | 55 | 68 | 38 |
| 7.0 | | 0.6 | 15 | 30 | 56.5 | 110 | 30 | 57 | 68 | 30 | 55 | 68 | 38 |
| 8.0 | | 0.7 | 15 | 30 | 56.5 | 110 | 30 | 57 | 68 | 30 | 55 | 68 | 38 |
| 9.0 | | 0.8 | 15 | 30 | 56.5 | 110 | 30 | 57 | 68 | 30 | 55 | 68 | 38 |
| 10.0 | | 0.9 | 15 | 30 | 56.5 | 110 | 30 | 57 | 68 | 30 | 55 | 68 | 38 |
| 12.0 | | 1.0 | 15 | 35 | 56.5 | 86 | 35 | 57 | 52 | 35 | 55 | 52 | 52 |
| 14.0 | | 1.2 | 15 | 35 | 56.5 | 86 | 35 | 57 | 52 | 35 | 55 | 52 | 52 |
| 16.0 | | 1.4 | 15 | 35 | 73.5 | 86 | 35 | 71.5 | 52 | 35 | 69.5 | 52 | 68 |
| 18.0 | | 1.6 | 15 | 35 | 73.5 | 86 | 35 | 71.5 | 52 | 35 | 69.5 | 52 | 68 |
| 20.0 | | 1.7 | 15 | 35 | 73.5 | 86 | 35 | 71.5 | 52 | 35 | 69.5 | 52 | 68 |
| 22.0 | | 1.9 | 15 | 35 | 73.5 | 86 | 35 | 71.5 | 52 | 35 | 69.5 | 52 | 68 |
| 25.0 | | 2.2 | 15 | 40 | 73.5 | 60 | 40 | 71.5 | 39 | 40 | 69.5 | 39 | 88 |
| 30.0 | | 2.6 | 15 | 40 | 73.5 | 60 | 40 | 71.5 | 39 | 40 | 69.5 | 39 | 88 |
| 31.5 | | 2.7 | 15 | 45 | 74 | 50 | 45 | 71.5 | 30 | 45 | 69.5 | 30 | 112 |
| 35.0 | | 3.0 | 15 | 45 | 74 | 50 | 45 | 71.5 | 30 | 45 | 69.5 | 30 | 112 |
| 40.0 | | 3.5 | 15 | 45 | 94.5 | 44 | 45 | 95 | 30 | 45 | 93 | 30 | 142 |
| 45.0 | Θ | 3.9 | 15 | 45 | 94.5 | 44 | 45 | 95 | 30 | 45 | 93 | 30 | 142 |
| 50.0 | Θ | 4.3 | 15 | 45 | 94.5 | 44 | 45 | 95 | 30 | 45 | 93 | 30 | 142 |
| 55.0 | Θ | 4.8 | 15 | 45 | 94.5 | 44 | 45 | 95 | 30 | 45 | 93 | 30 | 142 |
| 60.0 | Θ | 5.2 | 15 | 45 | 94.5 | 44 | 45 | 95 | 30 | 45 | 93 | 30 | 142 |
| 65.0 | Θ | 5.7 | 15 | 50 | 96 | 40 | 50 | 96.5 | 25 | 50 | 94.5 | 25 | 178 |
| 70.0 | Θ | 6.1 | 15 | 50 | 96 | 40 | 50 | 96.5 | 25 | 50 | 94.5 | 25 | 178 |
| 75.0 | Θ | 6.5 | 15 | 50 | 96 | 40 | 50 | 96.5 | 25 | 50 | 94.5 | 25 | 178 |
| 80.0 | Θ | 7.0 | 15 | 50 | 121 | 40 | 50 | 121.5 | 25 | 50 | 119.5 | 25 | 224 |
| 90.0 | Θ | 7.8 | 15 | 50 | 121 | 40 | 50 | 121.5 | 25 | 50 | 119.5 | 25 | 224 |
| 100.0 | Θ | 8.7 | 15 | 50 | 121 | 40 | 50 | 121.5 | 25 | 50 | 119.5 | 25 | 224 |

Θ Capacitor produced according EN60252-1 standard with Arcotronics self-certification

## CASE WITHOUT FIXING BOLT

| Rated Cap. | | Rated Current | Max dv/dt | Diameter | Height | Pack. | Diameter | Height | Pack. | Diameter | Height | Pack. | Weight |
|---|---|---|---|---|---|---|---|---|---|---|---|---|---|
| | | | | FAST-ON | | | BIPOLAR CABLE | | | UNIPOLAR | | | (FAST-ON) |
| µF | | A | V/µs | mm | mm | pcs | mm | mm | pcs | mm | mm | pcs | g |
| 1.0 | | 0.1 | 15 | 25 | 56.5 | 162 | 25 | 57 | 99 | 25 | 55 | 99 | 26 |
| 1.5 | | 0.1 | 15 | 25 | 56.5 | 162 | 25 | 57 | 99 | 25 | 55 | 99 | 26 |
| 2.0 | | 0.2 | 15 | 25 | 56.5 | 162 | 25 | 57 | 99 | 25 | 55 | 99 | 26 |
| 2.5 | | 0.2 | 15 | 25 | 56.5 | 162 | 25 | 57 | 99 | 25 | 55 | 99 | 26 |
| 3.0 | | 0.3 | 15 | 25 | 56.5 | 162 | 25 | 57 | 99 | 25 | 55 | 99 | 26 |
| 3.5 | | 0.3 | 15 | 25 | 56.5 | 162 | 25 | 57 | 99 | 25 | 55 | 99 | 26 |
| 4.0 | | 0.3 | 15 | 25 | 56.5 | 162 | 25 | 57 | 99 | 25 | 55 | 99 | 26 |
| 4.5 | | 0.3 | 15 | 25 | 56.5 | 162 | 25 | 57 | 99 | 25 | 55 | 99 | 26 |
| 5.0 | | 0.4 | 15 | 25 | 56.5 | 162 | 25 | 57 | 99 | 25 | 55 | 99 | 26 |
| 6.0 | | 0.5 | 15 | 30 | 56.5 | 110 | 30 | 57 | 68 | 30 | 55 | 68 | 38 |
| 6.3 | | 0.5 | 15 | 30 | 56.5 | 110 | 30 | 57 | 68 | 30 | 55 | 68 | 38 |
| 7.0 | | 0.6 | 15 | 30 | 56.5 | 110 | 30 | 57 | 68 | 30 | 55 | 68 | 38 |
| 8.0 | | 0.7 | 15 | 30 | 56.5 | 110 | 30 | 57 | 68 | 30 | 55 | 68 | 38 |
| 9.0 | | 0.8 | 15 | 30 | 56.5 | 110 | 30 | 57 | 68 | 30 | 55 | 68 | 38 |
| 10.0 | | 0.9 | 15 | 30 | 56.5 | 110 | 30 | 57 | 68 | 30 | 55 | 68 | 38 |
| 12.0 | | 1.0 | 15 | 35 | 56.5 | 86 | 35 | 57 | 52 | 35 | 55 | 52 | 52 |
| 14.0 | | 1.2 | 15 | 35 | 56.5 | 86 | 35 | 57 | 52 | 35 | 55 | 52 | 52 |
| 16.0 | | 1.4 | 15 | 35 | 73.5 | 86 | 35 | 71.5 | 52 | 35 | 69.5 | 52 | 68 |
| 18.0 | | 1.6 | 15 | 35 | 73.5 | 86 | 35 | 71.5 | 52 | 35 | 69.5 | 52 | 68 |
| 20.0 | | 1.7 | 15 | 35 | 73.5 | 86 | 35 | 71.5 | 52 | 35 | 69.5 | 52 | 68 |
| 22.0 | | 1.9 | 15 | 35 | 73.5 | 86 | 35 | 71.5 | 52 | 35 | 69.5 | 52 | 68 |
| 25.0 | | 2.2 | 15 | 40 | 73.5 | 60 | 40 | 71.5 | 39 | 40 | 69.5 | 39 | 88 |
| 30.0 | | 2.6 | 15 | 40 | 73.5 | 60 | 40 | 71.5 | 39 | 40 | 69.5 | 39 | 88 |
| 31.5 | | 2.7 | 15 | 45 | 74 | 50 | 45 | 71.5 | 30 | 45 | 69.5 | 30 | 112 |
| 35.0 | | 3.0 | 15 | 45 | 74 | 50 | 45 | 71.5 | 30 | 45 | 69.5 | 30 | 112 |
| 40.0 | | 3.5 | 15 | 45 | 94.5 | 44 | 45 | 95 | 30 | 45 | 93 | 30 | 142 |
| 45.0 | Θ | 3.9 | 15 | 45 | 94.5 | 44 | 45 | 95 | 30 | 45 | 93 | 30 | 142 |
| 50.0 | Θ | 4.3 | 15 | 45 | 94.5 | 44 | 45 | 95 | 30 | 45 | 93 | 30 | 142 |
| 55.0 | Θ | 4.8 | 15 | 45 | 94.5 | 44 | 45 | 95 | 30 | 45 | 93 | 30 | 142 |
| 60.0 | Θ | 5.2 | 15 | 45 | 94.5 | 44 | 45 | 95 | 30 | 45 | 93 | 30 | 142 |
| 65.0 | Θ | 5.7 | 15 | 50 | 94.5 | 40 | 50 | 95 | 25 | 50 | 93 | 25 | 178 |
| 70.0 | Θ | 6.1 | 15 | 50 | 94.5 | 40 | 50 | 95 | 25 | 50 | 93 | 25 | 178 |
| 75.0 | Θ | 6.5 | 15 | 50 | 94.5 | 40 | 50 | 95 | 25 | 50 | 93 | 25 | 178 |
| 80.0 | Θ | 7.0 | 15 | 50 | 118.5 | 40 | 50 | 119 | 25 | 50 | 117 | 25 | 224 |
| 90.0 | Θ | 7.8 | 15 | 50 | 118.5 | 40 | 50 | 119 | 25 | 50 | 117 | 25 | 224 |
| 100.0 | Θ | 8.7 | 15 | 50 | 118.5 | 40 | 50 | 119 | 25 | 50 | 117 | 25 | 224 |

Θ Capacitor produced according EN60252-1 standard with Arcotronics self-certification

## CASE WITH QUICK FITTING DEVICE

| Rated Cap. | Rated Current | Max dv/dt | Diameter | Height | Pack. | Diameter | Height | Pack. | Diameter | Height | Pack. | Weight |
|---|---|---|---|---|---|---|---|---|---|---|---|---|
| | | | FAST-ON | | | BIPOLAR CABLE | | | UNIPOLAR | | | (FAST-ON) |
| µF | A | V/µs | mm | mm | pcs | mm | mm | pcs | mm | mm | pcs | g |
| 1.0 | 0.1 | 15 | 25 | 56.5 | 162 | 25 | 57 | 99 | 25 | 55 | 99 | 26 |
| 1.5 | 0.1 | 15 | 25 | 56.5 | 162 | 25 | 57 | 99 | 25 | 55 | 99 | 26 |
| 2.0 | 0.2 | 15 | 25 | 56.5 | 162 | 25 | 57 | 99 | 25 | 55 | 99 | 26 |
| 2.5 | 0.2 | 15 | 25 | 56.5 | 162 | 25 | 57 | 99 | 25 | 55 | 99 | 26 |
| 3.0 | 0.3 | 15 | 25 | 56.5 | 162 | 25 | 57 | 99 | 25 | 55 | 99 | 26 |
| 3.5 | 0.3 | 15 | 25 | 56.5 | 162 | 25 | 57 | 99 | 25 | 55 | 99 | 26 |
| 4.0 | 0.3 | 15 | 25 | 56.5 | 162 | 25 | 57 | 99 | 25 | 55 | 99 | 26 |
| 4.5 | 0.3 | 15 | 25 | 56.5 | 162 | 25 | 57 | 99 | 25 | 55 | 99 | 26 |
| 5.0 | 0.4 | 15 | 25 | 56.5 | 162 | 25 | 57 | 99 | 25 | 55 | 99 | 26 |
| 6.0 | 0.5 | 15 | 30 | 56.5 | 110 | 30 | 57 | 68 | 30 | 55 | 68 | 38 |
| 6.3 | 0.5 | 15 | 30 | 56.5 | 110 | 30 | 57 | 68 | 30 | 55 | 68 | 38 |
| 7.0 | 0.6 | 15 | 30 | 56.5 | 110 | 30 | 57 | 68 | 30 | 55 | 68 | 38 |
| 8.0 | 0.7 | 15 | 30 | 56.5 | 110 | 30 | 57 | 68 | 30 | 55 | 68 | 38 |
| 9.0 | 0.8 | 15 | 30 | 56.5 | 110 | 30 | 57 | 68 | 30 | 55 | 68 | 38 |
| 10.0 | 0.9 | 15 | 30 | 56.5 | 110 | 30 | 57 | 68 | 30 | 55 | 68 | 38 |
| 12.0 | 1.0 | 15 | 35 | 56.5 | 86 | 35 | 57 | 52 | 35 | 55 | 52 | 52 |
| 14.0 | 1.2 | 15 | 35 | 56.5 | 86 | 35 | 57 | 52 | 35 | 55 | 52 | 52 |
| 16.0 | 1.4 | 15 | 35 | 73.5 | 86 | | | | | | | 68 |
| 18.0 | 1.6 | 15 | 35 | 73.5 | 104 | | | | | | | 68 |
| 20.0 | 1.7 | 15 | 35 | 73.5 | 104 | | | | | | | 68 |
| 22.0 | 1.9 | 15 | 35 | 73.5 | 104 | | | | | | | 68 |

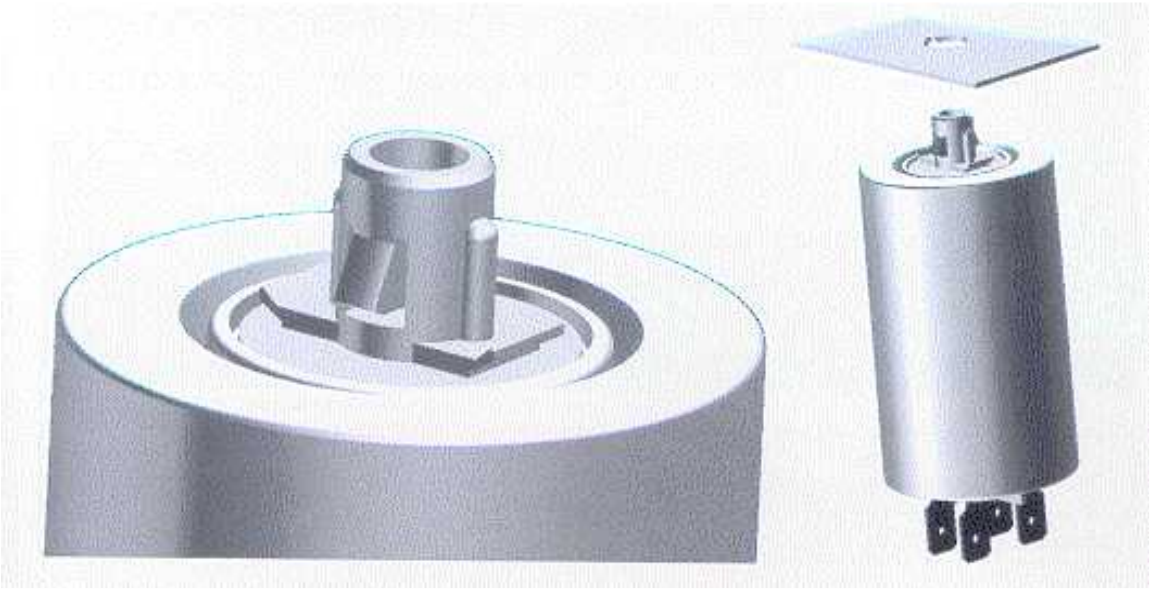

## C.27. SERIES Fast-on 2.8 mm with Hole

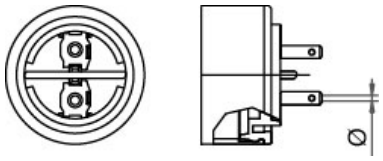


| TYPE OF TERMINAL | FAST-ON 2.8 WITH HOLE |
|---|---|
| Execution: | Standard |
| Protection degree | IP00 |
| Wire Material | Steel tinned by electrolysis |
| Length | 2.8 mm |
| Thickness | 0.8 mm |
| Hole Diameter | 1.3 |
| Standard | DIN46244 |
| Nut | Steel coated with zinc M8 UNI5589 DIN 936 |
| Washer | Diameter 8.4 White steel coated with zinc DIN 6798 |

| | | | | | | | | | | | | | | | |
|---|---|---|---|---|---|---|---|---|---|---|---|---|---|---|---|
| *Metal bolt / quick fit execution* | C | 2 | 7 | - | **-** | **C/D** | **1** | - | - | - | - | A | A | - | - |

| | | | | | | | | | | | | | | | |
|---|---|---|---|---|---|---|---|---|---|---|---|---|---|---|---|
| *Basic execution* | C | 2 | 7 | - | **-** | **A** | **1** | - | - | - | - | A | A | - | - |

## C.27. SERIES Fast-on 2.8 mm with Slot

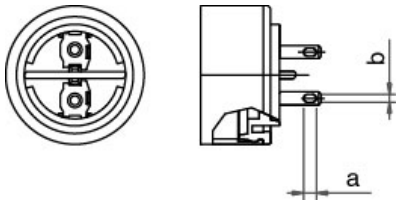


| TYPE OF TERMINAL | FAST ON 2.8 WITH SLOT (SOLDERING TERMINALS) |
|---|---|
| Execution: | On request |
| Protection degree | IP00 |
| Wire material | Steel tinned by electrolysis |
| Length | 2.8 mm |
| Thickness | 0.8 mm |
| Slot a x b | 2.8 x 1.7 |
| Standard | DIN46244 |
| Nut | Steel coated with zinc M8 UNI5589 DIN 936 |
| Washer | Diameter 8.4 White steel coated with zinc DIN 6798 |

| | | | | | | | | | | | | | | | |
|---|---|---|---|---|---|---|---|---|---|---|---|---|---|---|---|
| *Metal bolt / quick fit execution* | C | 2 | 7 | - | - | **C/D** | **4** | - | - | - | - | A | A | - | - |

| | | | | | | | | | | | | | | | |
|---|---|---|---|---|---|---|---|---|---|---|---|---|---|---|---|
| *Basic execution* | C | 2 | 7 | - | - | **A** | **4** | - | - | - | - | A | A | - | - |

## C.27. SERIES Single Fast-on 6.3 mm

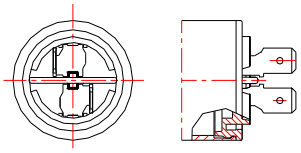

| TERMINAL | FAST-ON 6.3 (SINGLE) |
|---|---|
| Execution: | Standard |
| Protection degree | IP00 |
| Wire material | Steel tinned by electrolysis |
| Length | 6.3 mm |
| Thickness | 0.8 mm |
| Standard | DIN46244 |
| Nut | Steel coated with zinc M8 UNI5589 DIN 936 |
| Washer | Diameter 8.4 White steel coated with zinc DIN 6798 |

| | | | | | | | | | | | | | | | |
|---|---|---|---|---|---|---|---|---|---|---|---|---|---|---|---|
| *Metal bolt / quick fit execution* | C | 2 | 7 | - | **-** | **C/D** | **2** | - | - | - | - | A | A | - | - |

| | | | | | | | | | | | | | | | |
|---|---|---|---|---|---|---|---|---|---|---|---|---|---|---|---|
| *Basic execution* | C | 2 | 7 | - | **-** | **A** | **2** | - | - | - | - | A | A | - | - |

## C.27. SERIES Double Fast-on 6.3 mm

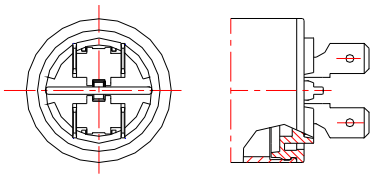

| TYPE OF TERMINAL | FAST-ON 6.3MM (DOUBLE) |
|---|---|
| Execution: | Standard |
| Protection degree | IP00 |
| Wire material | Steel tinned by electrolysis |
| Length | 6.3 mm |
| Thickness | 0.8 mm |
| Standard | DIN46244 |
| Nut | Steel coated with zinc M8 UNI5589 DIN 936 |
| Washer | Diameter 8.4 White steel coated with zinc DIN 6798 |

| | | | | | | | | | | | | | | | |
|---|---|---|---|---|---|---|---|---|---|---|---|---|---|---|---|
| *Metal bolt / quick fit execution* | C | 2 | 7 | - | **-** | **C/D** | **3** | - | - | - | - | A | A | - | - |

| | | | | | | | | | | | | | | | |
|---|---|---|---|---|---|---|---|---|---|---|---|---|---|---|---|
| *Basic execution* | C | 2 | 7 | - | **-** | **A** | **3** | - | - | - | - | A | A | - | - |

## C.27. SERIES Bipolar Cable Standard Execution

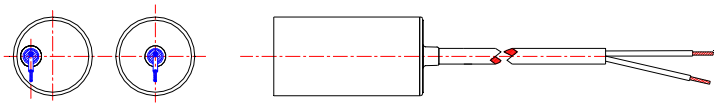

*Cable mark : H05 V2 V2-F 90°C*

| TYPE | FLEXIBLE BIPOLAR CABLE FOR HIGH TEMPERATURE |
|---|---|
| Execution: | Standard |
| Protection degree | IP55 |
| Cable | PVC (Polyvinyl chloride) |
| Designation | H05V2V2-F |
| Standard | CEI 20 – 20 |
| Operating Temperature | 90 °C |
| Conductor | Flexible soft copper wire 2 x 0.75 sq.mm |
| Insulating | Polyvinyl chloride TI3 |
| Sleeve | Polyvinyl chloride TM3 |
| Conductors colour | Blue / Brown |
| Cable stripping. (Sg) | 40 mm |
| Cable peeling (Sp) | 8 mm |
| Finishing | Tinning |

| *Metal bolt / quick fit execution* | C | 2 | 7 | - | - | **C/D** | **F** | - | - | - | - | | | - | - |
|---|---|---|---|---|---|---|---|---|---|---|---|---|---|---|---|
| Total length | | | | | | | | | | | | | | | |
| S = 150 mm | | | | | | **C/D** | **F** | | | | | **L** | **D** | | |
| S = 200 mm | | | | | | **C/D** | **F** | | | | | **L** | **E** | | |
| S = 250 mm | | | | | | **C/D** | **F** | | | | | **L** | **F** | | |
| S = 300 mm | | | | | | **C/D** | **F** | | | | | **L** | **G** | | |
| S = 350 mm | | | | | | **C/D** | **F** | | | | | **L** | **H** | | |
| S = 400 mm | | | | | | **C/D** | **F** | | | | | **L** | **I** | | |

| *Basic execution* | C | 2 | 7 | - | - | **A** | **F** | - | - | - | - | | | - | - |
|---|---|---|---|---|---|---|---|---|---|---|---|---|---|---|---|
| Total Length | | | | | | | | | | | | | | | |
| S = 150 mm | | | | | | **A** | **F** | | | | | **L** | **D** | | |
| S = 200 mm | | | | | | **A** | **F** | | | | | **L** | **E** | | |
| S = 250 mm | | | | | | **A** | **F** | | | | | **L** | **F** | | |
| S = 300 mm | | | | | | **A** | **F** | | | | | **L** | **G** | | |
| S = 350 mm | | | | | | **A** | **F** | | | | | **L** | **H** | | |
| S = 400 mm | | | | | | **A** | **F** | | | | | **L** | **I** | | |

For applications requiring a specific termination, Arcotronics supplies a full range of capacitors with a bipolar cable provided with terminal. The material used (Brass – Cu Zn) provided with tinning (Gal Sn) determines the quality and reliability of the connections also in the case of very high temperatures (155°C).

## C.27. SERIES Bipolar Cable Pin Terminals

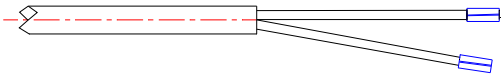

| TYPE | BIPOLAR CABLE WITH PIN TERMINAL |
|---|---|
| **Execution:** | **Special** |
| Cable unsheathing | 40 mm |
| Terminations: | |
| Point material | Cu Zn gal Sn |
| Material thickness | 0.25 mm |
| Terminal length | 7 mm |

| | | | | | | | | | | | | | | | |
|---|---|---|---|---|---|---|---|---|---|---|---|---|---|---|---|
| *Metal bolt / quick fit execution* | C | 2 | 7 | - | - | **C/D** | **J** | - | - | - | - | * | * | - | - |
| Total length S = 300 mm | | | | | | **C/D** | **J** | | | | | **L** | **G** | | |

| | | | | | | | | | | | | | | | |
|---|---|---|---|---|---|---|---|---|---|---|---|---|---|---|---|
| *Basic execution* | C | 2 | 7 | - | - | **A** | **J** | - | - | - | - | * | * | - | - |
| Total length S = 300mm | | | | | | **A** | **J** | | | | | **L** | **G** | | |

## C.27. SERIES Bipolar Cable Straight Fast-on 6.3 mm

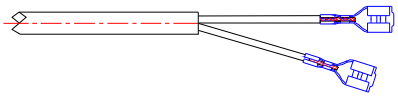

| TYPE | BIPOLAR CABLE WITH STRAIGHT FAST-ON 6.3 |
|---|---|
| **Execution:** | **Special** |
| Termination: | Straight Female Fast-on – 6.3 |
| Cable stripping | 40 mm |
| Fast – on material | Cu Zn gal Sn |
| Material thickness | 0.42 mm |
| Terminal length | 19.3 mm |

| | | | | | | | | | | | | | | | |
|---|---|---|---|---|---|---|---|---|---|---|---|---|---|---|---|
| *Metal bolt / quick fit execution* | C | 2 | 7 | - | - | **C/D** | **H** | - | - | - | - | * | * | - | - |
| Total length S = 300 mm | | | | | - | **C/D** | **H** | | | | | **L** | **G** | | |

| | | | | | | | | | | | | | | | |
|---|---|---|---|---|---|---|---|---|---|---|---|---|---|---|---|
| *Basic execution* | C | 2 | 7 | - | - | **A** | **H** | - | - | - | - | * | * | - | - |
| Total length S = 300 mm | | | | | - | **A** | **H** | | | | | **L** | **G** | | |

## C.27. SERIES Bipolar Cable Straight Female Fast-on 4.8 mm

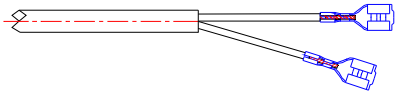

| TYPE | BIPOLAR CABLE WITH STRAIGHT FEMALE FAST-ON 4.8 |
|---|---|
| **Execution:** | **Special** |
| Termination: | Straight female fast-on – 4.8 |
| Cable unsheathing | 40 mm |
| Fast-on material | Cu Zn gal Sn |
| Material thickness | 0.35 mm |
| Terminal length | 15.6 mm |

| | | | | | | | | | | | | | | | |
|---|---|---|---|---|---|---|---|---|---|---|---|---|---|---|---|
| *Metal bolt / quick fit execution* | C | 2 | 7 | - | - | **C/D** | **G** | - | - | - | - | * | * | - | - |
| Total length S = 300 mm | | | | | | **C/D** | **G** | | | | | **L** | **G** | | |

| | | | | | | | | | | | | | | | |
|---|---|---|---|---|---|---|---|---|---|---|---|---|---|---|---|
| *Basic execution* | C | 2 | 7 | - | - | **A** | **G** | - | - | - | - | * | * | - | - |
| Total length S = 300 mm | | | | | | **A** | **G** | | | | | **L** | **G** | | |

## C.27. SERIES Bipolar Cable Flag Female Fast-on 4.8 mm

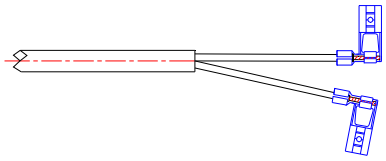

| TYPE | BIPOLAR CABLE WITH FEMALE FLAG FAST-ON 4.8 |
|---|---|
| **Execution:** | **Special** |
| Fast-on material | Cu Zn gal Sn |
| Material thickness | 0.35 mm |
| Terminal length | 12.5 mm |

| | | | | | | | | | | | | | | | |
|---|---|---|---|---|---|---|---|---|---|---|---|---|---|---|---|
| *Metal bolt / quick fit execution* | C | 2 | 7 | - | - | **C/D** | **L** | - | - | - | - | * | * | - | - |
| Total length S = 300 mm | | | | | | **C/D** | **L** | | | | | **L** | **G** | | |

| | | | | | | | | | | | | | | | |
|---|---|---|---|---|---|---|---|---|---|---|---|---|---|---|---|
| *Basic execution* | C | 2 | 7 | - | - | **A** | **L** | - | - | - | - | * | * | - | - |
| Total length S = 300 mm | | | | | | **A** | **L** | | | | | **L** | **G** | | |

## C.27. SERIES Bipolar Cable Flag Female Fast-on 6.3 mm

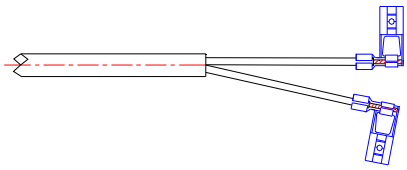

| | |
|---|---|
| **TYPE** | **BIPOLAR CABLE WITH FEMALE FLAG FAST-ON A 6.3** |
| **Execution:** | **Special** |
| Fast-on material | Cu Zn gal Sn |
| Material thickness | 0.35 mm |
| Terminal length | 12.5 mm |

| | | | | | | | | | | | | | | | |
|---|---|---|---|---|---|---|---|---|---|---|---|---|---|---|---|
| *Metal bolt / quick fit execution* | C | 2 | 7 | - | - | **C/D** | **K** | - | - | - | - | * | * | - | - |
| Total length S = 300 mm | | | | | | **C/D** | **K** | | | | | **L** | **G** | | |

| | | | | | | | | | | | | | | | |
|---|---|---|---|---|---|---|---|---|---|---|---|---|---|---|---|
| *Basic execution* | C | 2 | 7 | - | - | **A** | **K** | - | - | - | - | * | * | - | - |
| Total length S = 300 mm | | | | | | **A** | **K** | | | | | **L** | **G** | | |

## C.27. SERIES Bipolar Cable Ring Terminals M4

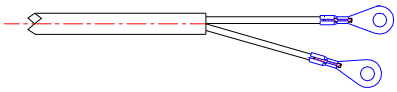

| | |
|---|---|
| **TYPE** | **BIPOLAR CABLE WITH RING TERMINAL M4** |
| **Execution:** | **Special** |
| Terminal material | Cu Zn gal Sn |
| Material thickness | 0.40 mm |
| Ring diameter | 4 mm |

| | | | | | | | | | | | | | | | |
|---|---|---|---|---|---|---|---|---|---|---|---|---|---|---|---|
| *Metal bolt / quick fit execution* | C | 2 | 7 | - | - | **C/D** | **I** | - | - | - | - | * | * | - | - |
| Total length S=300 mm | | | | | | **C/D** | **I** | | | | | **L** | **G** | | |

| | | | | | | | | | | | | | | | |
|---|---|---|---|---|---|---|---|---|---|---|---|---|---|---|---|
| *Basic execution* | C | 2 | 7 | - | - | **A** | **I** | - | - | - | - | * | * | - | - |
| Total length S=300mm | | | | | | **A** | **I** | | | | | **L** | **G** | | |

The range of capacitors belonging to C.27 series with a PVC unipolar cable has been specifically designed for applications in circulators and pumps fields. The cable is harmonised according to CEI 20-20 standards ( CENELEC HD21) for an operating temperature of 90°C, but assures a maximum temperature up to 105°C.

## C.27. SERIES Unipolar Cable Flexible

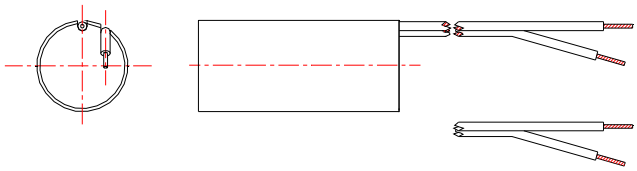

| TYPE | PVC INSULATED UNIPOLAR CABLE, WITHOUT SLEEVE FOR HIGH TEMPERATURES |
|---|---|
| Execution: | Standard |
| Protection degree | IP55 |
| Cable | PVC (Polyvinyl chloride) |
| Designation | H05V2-U |
| Standard | CEI 20 – 20 |
| Operating temperature | 90 °C |
| **Conductor** | **FLEXIBLE SOFT COPPER WIRE** |
| Section | 0.75 sq.mm |
| Insulating | Good quality Polyvinyl chloride TI3 |
| Insulating: Ext. diameter | 2.4 mm (±0.2) |
| Sleeve | Absent |
| Conductor colour | White |
| Rated voltage | 300 / 500 V |
| Cable unsheathing | 8 mm |
| Finishing | Tinning |

| *Metal bolt / quick fit execution* | C | 2 | 7 | - | - | **C/D** | | - | - | - | - | * | * | - | - |
|---|---|---|---|---|---|---|---|---|---|---|---|---|---|---|---|
| S = 100 mm | | | | | | | **A** | | | | | **A** | **C** | | |
| S = 150 mm | | | | | | | **A** | | | | | **A** | **D** | | |
| S = 200 mm | | | | | | | **A** | | | | | **A** | **E** | | |

| *Basic execution* | C | 2 | 7 | - | - | **A** | | - | - | - | - | * | * | - | - |
|---|---|---|---|---|---|---|---|---|---|---|---|---|---|---|---|
| S = 100 mm | | | | | | | **A** | | | | | **A** | **C** | | |
| S = 150 mm | | | | | | | **A** | | | | | **A** | **D** | | |
| S = 200 mm | | | | | | | **A** | | | | | **A** | **E** | | |

## C.27 SERIES. Unipolar Cable Stiff Wires

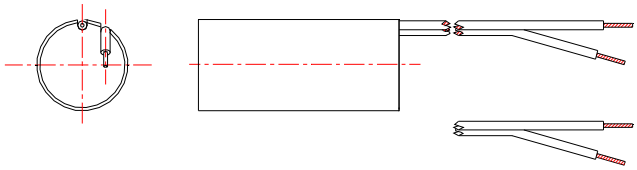

| TYPE | PVC INSULATED UNIPOLAR CABLE, WITHOUT SLEEVE FOR HIGH TEMPERATURES |
|---|---|
| Execution: | Standard |
| Protection degree | IP55 |
| Cable | PVC (Polyvinyl chloride) |
| Designation | H05V2-U |
| Standard | CEI 20 – 20 |
| Operating temperature | 90 °C |
| **Conductor** | **SINGLE SOFT COPPER WIRE** |
| Section | 0.75 sq.mm |
| Insulating | Good quality Polyvinyl chloride TI3 |
| Insulating: ext. diameter | 2.3 mm (±0.2) |
| Sleeve | Absent |
| Conductors colour | White |
| Rated voltage | 300 / 500 V |
| Cable unsheathing | 8 mm |
| Cable: Minimum length | 60 mm |
| Cable: Maximum length | 250mm |

| *Metal bolt / quick fit execution* | C | 2 | 7 | - | - | **C/D** | | - | - | - | - | * | * | - | - |
|---|---|---|---|---|---|---|---|---|---|---|---|---|---|---|---|
| Total length S = 100 mm | | | | | | **C/D** | **R** | | | | | **A** | **C** | | |
| S = 150 mm | | | | | | **C/D** | **R** | | | | | **A** | **D** | | |

| *Basic execution* | C | 2 | 7 | - | - | **A** | | - | - | - | - | * | * | - | - |
|---|---|---|---|---|---|---|---|---|---|---|---|---|---|---|---|
| Total length S = 100 mm | | | | | | **A** | **R** | | | | | **A** | **C** | | |
| S = 150 mm | | | | | | **A** | **R** | | | | | **A** | **D** | | |

## Unipolar Cable Flexible High Temperature

The range of high temperature capacitors HT has been specifically designed for applications where a long life must be assured with high temperatures i.e. for circulators pumps. The capacitors have been approved by VDE in compliance with EN60252 standard for a maximum operating temperature up to 100°C, the expected life at 100 °C @ 400 Vac is 10000 H.

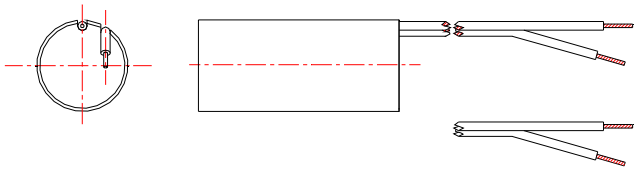

| | |
|---|---|
| Operating Temperature: | |
| Minimum / Maximum | -25°C / + 100°C |
| Expected Life | 10000 H (CLASS B) at 400 Vac 100 °C<br>10000 H (CLASS B) at 470 Vac 85 °C<br>30000 H (CLASS A) at 420 Vac 85 °C |
| Approval: | EN60252 (VDE) |
| Capacitance: | from 1 to 9 μ F |
| Standard execution: | PVC Stiff Cable |
| Type of cable | as for |

| *Basic execution* | C | 2 | 7 | 4 | E | * | A | - | - | - | - | * | * | - | - |
|---|---|---|---|---|---|---|---|---|---|---|---|---|---|---|---|
| S = 100 mm | | | | | | A/C/D | **A** | | | | | **A** | **C** | | |
| S = 150 mm | | | | | | A/C/D | **A** | | | | | **A** | **D** | | |
| S = 200 mm | | | | | | A/C/D | **A** | | | | | **A** | **E** | | |

| CAP. | dv/dt Max | Diameter | Height |
|---|---|---|---|
| μF | V/μs | ϕ | H |
| 1 | 20 | 25 | 48 |
| 1.5 | 20 | 25 | 48 |
| 2 | 20 | 25 | 48 |
| 2.5 | 20 | 25 | 48 |
| 3 | 20 | 25 | 48 |
| 3.5 | 20 | 30 | 55 |
| 4 | 20 | 30 | 55 |
| 4.5 | 20 | 30 | 55 |
| 5 | 20 | 30 | 55 |
| 6 | 20 | 35 | 55 |
| 6.3 | 20 | 35 | 55 |
| 7 | 20 | 35 | 55 |
| 8 | 20 | 35 | 55 |

## ACCESSORIES PLASTIC PROTECTION CAPACITORS:

### Mechanical features

| | | |
|---|---|---|
| Protection degree | ⇒ | IP40 |
| Material | ⇒ | Eva Novex V22 H864 (Polyethylene) |
| Selfextinguishing | ⇒ | HB |
| Colour | ⇒ | Natural |

### Mechanical drawing

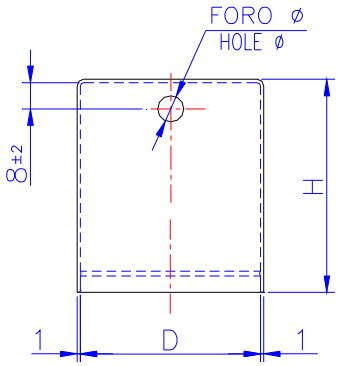


| D (mm) | H (mm) | HOLE Φ (mm) | CODE |
|---|---|---|---|
| 25 | 41 | 6 | 20.151.0079.00 |
| 25 | 41 | 8 | 20.151.0022.00 |
| 25 | 41 | 9 | 20.151.0081.00 |
| 30 | 40 | 6 | 20.151.0077.00 |
| 30 | 40 | 8 | 20.151.0023.00 |
| 30 | 65 | 8 | 20.151.0084.00 |
| 30 | 40 | 9 | 20.151.0082.00 |
| 30 | 40 | 10 | 20.151.0083.00 |
| 35 | 40 | 6 | 20.151.0078.00 |
| 35 | 40 | 8 | 20.151.0024.00 |
| 35 | 65 | 8 | 20.151.0085.00 |
| 35 | 40 | 10 | 20.151.0025.00 |
| 35 | 40 | 12 | 20.151.0026.00 |
| 40 | 50 | 6 | 20.151.0030.00 |
| 40 | 50 | 8 | 20.151.0033.00 |
| 40 | 50 | 10 | 20.151.0075.00 |
| 40 | 50 | 12 | 20.151.0035.00 |
| 45 | 50 | 6 | 20.151.0037.00 |
| 45 | 50 | 8 | 20.151.0040.00 |
| 45 | 50 | 10 | 20.151.0076.00 |
| 45 | 50 | 12 | 20.151.0042.00 |
| 50 | 65 | 8 | 20.151.0088.00 |
| 50 | 65 | 8 | 20.151.0089.00 |

## C.27 SERIES – OPTIONS

| Series | Fixing | Execution | Rated Cap. (from, to) µF | Diameter mm | Height mm |
|---|---|---|---|---|---|
| C.27/4 | Bolt | Bipolar cable (unipolar cable) | 3.5 to 5 | 25 | 71.5 (69.5) |
| C.27/4 | Bolt | Bipolar cable (unipolar cable) | 6 to 8 | 30 | 71.5 (69.5) |
| C.27/4 | Bolt | Bipolar cable (unipolar cable) | 14 to 16 | 35 | 95.5 (93.5) |
| C.27/4 | Bolt | Bipolar cable (unipolar cable) | 18 to 22 | 40 | 95.5 (93.5) |
| C.27/4 | Bolt | Bipolar cable (unipolar cable) | 35 | 50 | 95.5 (93.5) |
| C.27/4 | Without bolt | Bipolar cable (unipolar cable) | 3.5 to 5 | 25 | 71.5 (69.5) |
| C.27/4 | Without bolt | Bipolar cable (unipolar cable) | 6 to 8 | 30 | 71.5 (69.5) |
| C.27/4 | Without bolt | Bipolar cable (unipolar cable) | 14 to 16 | 35 | 95.5 (93.5) |
| C.27/4 | Without bolt | Bipolar cable (unipolar cable) | 18 to 22 | 40 | 95.5 (93.5) |
| C.27/4 | Without bolt | Bipolar cable (unipolar cable) | 35 | 50 | 120 (119.5) |
| C.27/6 | Bolt | Bipolar cable (unipolar cable) | 3.5 to 5 | 25 | 71.5 (69.5) |
| C.27/6 | Bolt | Bipolar cable (unipolar cable) | 6 to 8 | 30 | 71.5 (69.5) |
| C.27/6 | Bolt | Bipolar cable (unipolar cable) | 14 to 16 | 35 | 95.5 (95.5) |
| C.27/6 | Bolt | Bipolar cable (unipolar cable) | 18 to 22 | 40 | 95.5 (95.5) |
| C.27/6 | Without bolt | Bipolar cable (unipolar cable) | 3.5 to 5 | 25 | 71.5 (69.5) |
| C.27/6 | Without bolt | Bipolar cable (unipolar cable) | 6 to 8 | 30 | 71.5 (69.5) |
| C.27/6 | Without bolt | Bipolar cable (unipolar cable) | 14 to 16 | 35 | 95.5 (95.5) |
| C.27/6 | Without bolt | Bipolar cable (unipolar cable) | 18 to 22 | 40 | 95.5 (95.5) |
| C.27/7 | Bolt | Bipolar cable (unipolar cable) | 6 to 10 | 25 | 71.5 (69.5) |
| C.27/7 | Bolt | Bipolar cable (unipolar cable) | 12 to 14 | 30 | 71.5 (69.5) |
| C.27/7 | Bolt | Bipolar cable (unipolar cable) | 25 to 30 | 35 | 95.5 (93.5) |
| C.27/7 | Bolt | Bipolar cable (unipolar cable) | 31.5 to 35 | 40 | 95.5 (93.5) |
| C.27/7 | Without bolt | Bipolar cable (unipolar cable) | 6 to 10 | 25 | 71.5 (69.5) |
| C.27/7 | Without bolt | Bipolar cable (unipolar cable) | 12 to 14 | 30 | 71.5 (69.5) |
| C.27/7 | Without bolt | Bipolar cable (unipolar cable) | 25 to 30 | 35 | 95.5 (93.5) |
| C.27/7 | Without bolt | Bipolar cable (unipolar cable) | 31.5 to 35 | 40 | 95.5 (93.5) |

Общество с ограниченной ответственностью «МосЧип» ИНН 7719860671 / КПП 771901001
Адрес: 105318, г.Москва, ул.Щербаковская д.3, офис 1107

**Данный компонент на территории Российской Федерации**

**Вы можете приобрести в компании MosChip.**

Для оперативного оформления запроса Вам необходимо перейти по данной ссылке:

http://moschip.ru/get-element

Вы можете разместить у нас заказ для любого Вашего проекта, будь то серийное производство или разработка единичного прибора.

В нашем ассортименте представлены ведущие мировые производители активных и пассивных электронных компонентов.

Нашей специализацией является поставка электронной компонентной базы двойного назначения, продукции таких производителей как XILINX, Intel (ex.ALTERA), Vicor, Microchip, Texas Instruments, Analog Devices, Mini-Circuits, Amphenol, Glenair.

Сотрудничество с глобальными дистрибьюторами электронных компонентов, предоставляет возможность заказывать и получать с международных складов практически любой перечень компонентов в оптимальные для Вас сроки.

На всех этапах разработки и производства наши партнеры могут получить квалифицированную поддержку опытных инженеров.

Система менеджмента качества компании отвечает требованиям в соответствии с ГОСТ Р ИСО 9001, ГОСТ РВ 0015-002 и ЭС РД 009

**Офис по работе с юридическими лицами:**

105318, г.Москва, ул.Щербаковская д.3, офис 1107, 1118, ДЦ «Щербаковский»

Телефон: +7 495 668-12-70 (многоканальный)

Факс: +7 495 668-12-70 (доб.304)

E-mail: info@moschip.ru

Skype отдела продаж:
moschip.ru
moschip.ru_4
moschip.ru_6
moschip.ru_9