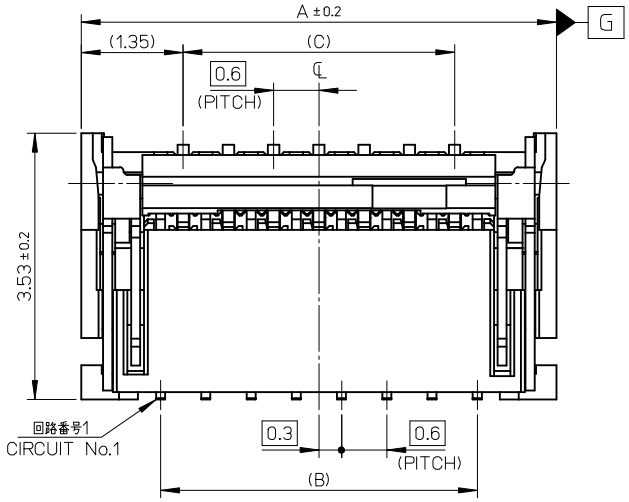

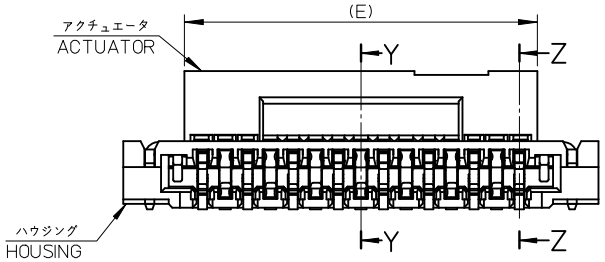

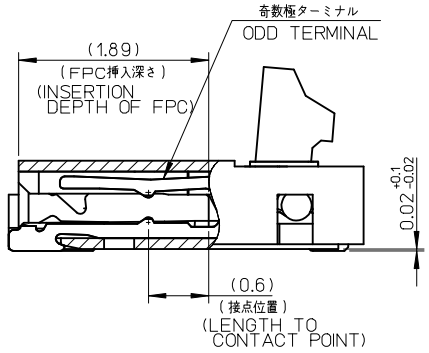

SECT. Z-Z

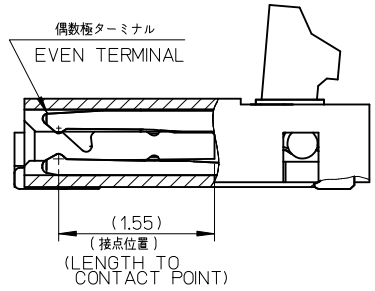

SECT. Y-Y

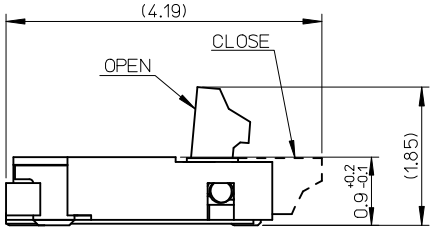

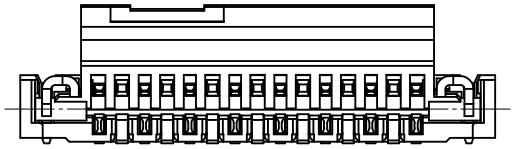

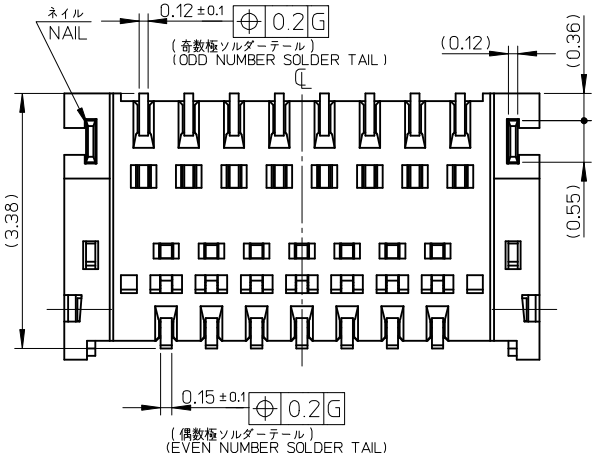

15.3	15.48	15.9	14.4	15.0	17.1	502250-5191	502250-5120	51
12.3	12.48	12.9	11.4	12.0	14.1	502250-4191	502250-4120	41
11.7	11.88	12.3	10.8	11.4	13.5	502250-3991	502250-3920	39
10.5	10.68	11.1	9.6	10.2	12.3	502250-3591	502250-3520	35
9.9	10.08	10.5	9.0	9.6	11.7	502250-3391	502250-3320	33
8.1	8.28	8.7	7.2	7.8	9.9	502250-2791	502250-2720	27
6.9	7.08	7.5	6.0	6.6	8.7	502250-2391	502250-2320	23
6.3	6.48	6.9	5.4	6.0	8.1	502250-2191	502250-2120	21
5.1	5.28	5.7	4.2	4.8	6.9	502250-1791	502250-1720	17
F	E	D	C	B	A	EMBOSSED TAPE PKG. ORDER NO.	MATERIAL No.	CIRCUITS

MODEL No. 502250-**20

REVISED
EC NO: J2009-1500
DRWN:MTAKASAKI 2008/12/09
CH'KD:MHAYASHI 2008/12/11
APPR:NUKITA 2008/12/11
DESCRIPTION
REV D

GENERAL TOLERANCES (UNLESS SPECIFIED)

10 UNDER	±0.2
10 OVER 30 UNDER	±0.25
30 OVER	±0.3
ANGULAR	±3°

DRAFT WHERE APPLICABLE MUST REMAIN WITHIN DIMENSIONS

DIMENSION STYLE: MM ONLY
SCALE: 15:1
DESIGN UNITS: METRIC
THIRD ANGLE PROJECTION

DRAWN BY: T.HIRAYAMA DATE: 2008/01/31
CHECKED BY: K.MORIKAWA DATE: 2008/01/31
APPROVED BY: H.HIRATA DATE: 2008/01/31
MATERIAL NO.: SEE TABLE

TITLE: 0.3 FPC CONN E/O B/F HSG ASSY HGT=0.9MM

molex MOLEX INCORPORATED

DOCUMENT NO.: SD-502250-003
SHEET NO.: 1 OF 3
SIZE: A3

THIS DRAWING CONTAINS INFORMATION THAT IS PROPRIETARY TO MOLEX INCORPORATED AND SHOULD NOT BE USED WITHOUT WRITTEN PERMISSION

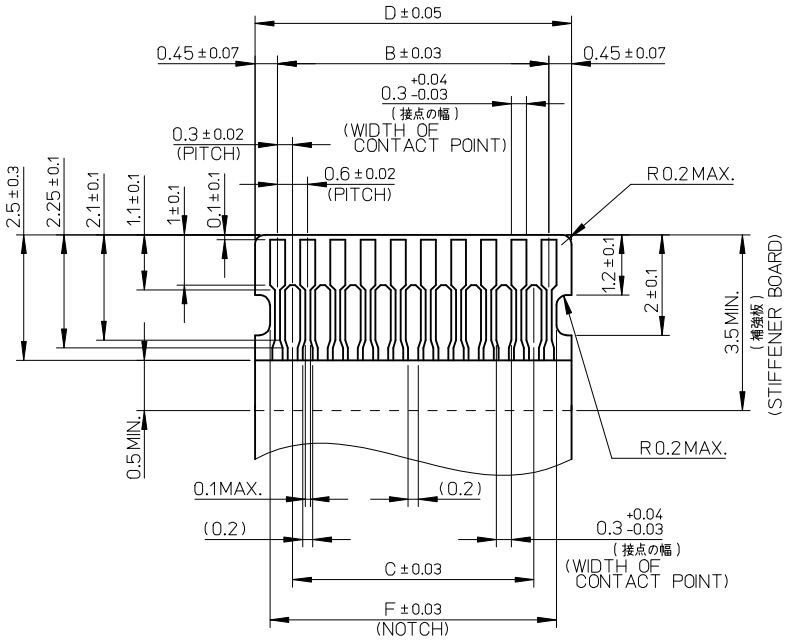

標準 FPC

STANDARD

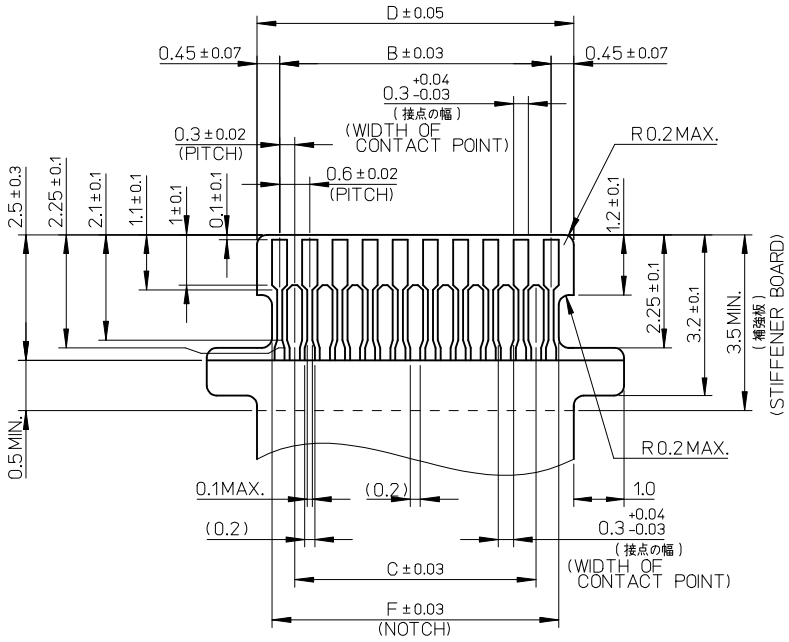

挿入位置確認用耳つきFPC

WITH EARS FOR FPC INSERTION ALIGNMENT

嵌合FPC推奨寸法
APPLICABLE FPC
RECOMMENDED DIMENSION

(仕上がり厚さ：0.2±0.03)
(THICKNESS : 0.2±0.03)

FPCについて：
抜き方向は、導体側から補強板側を推奨致します。
補強フィルム材質は、ポリイミドを推奨致します。
接着剤は熱硬化接着剤を推奨します。
尚、接着剤の接点部への付着は導通不良の原因になりますので、
染み出しが無い様、お願い致します。

ABOUT FPC:
RECOMMENDED PUNCHER DIRECTION:
FROM CONDUCTOR SIDE TO STIFFNER FILM SIDE.
RECOMMENDED MATERIAL:
STIFFENER FILM : POLYIMIDE
BONDING AGENT : THERMOSETTING AGENT
PLEASE PUT APPROPRIATE AMOUNT OF ADHESIVE ON ADHEREND
BECAUSE THERE IS A POSSIBILITY THAT THE EXTRA ADHESIVE
CAUSES THE DEFECT IN ELECTRICAL CONTINUITY.

SEE SHEET 1			
EC NO: J2009-1500			
DRWN:MTAKASAKI	2008/12/09		
CH'KD:MHAYASHI	2008/12/11		
APPR:NUKITA	2008/12/11		
D	REV	DESCRIPTION	

GENERAL TOLERANCES
(UNLESS SPECIFIED)

10 UNDER	±0.2
10 OVER 30 UNDER	±0.25
30 OVER	±0.3
ANGULAR ±3 °	

DRAFT WHERE APPLICABLE
MUST REMAIN
WITHIN DIMENSIONS

DIMENSION STYLE: MM ONLY	SCALE: 10:1	DESIGN UNITS: METRIC	THIRD ANGLE PROJECTION
DRAWN BY: T.HIRAYAMA	DATE: 2008/01/31	TITLE: 0.3 FPC CONN E/O B/F HSG ASSY HGT=0.9MM	
CHECKED BY: K.MORIKAWA	DATE: 2008/01/31		
APPROVED BY: H.HIRATA	DATE: 2008/01/31	MOLEX INCORPORATED	
MATERIAL NO.: SEE SHEET 1		DOCUMENT NO.: SD-502250-003	SHEET NO.: 2 OF 3
SIZE: A3	THIS DRAWING CONTAINS INFORMATION THAT IS PROPRIETARY TO MOLEX INCORPORATED AND SHOULD NOT BE USED WITHOUT WRITTEN PERMISSION		

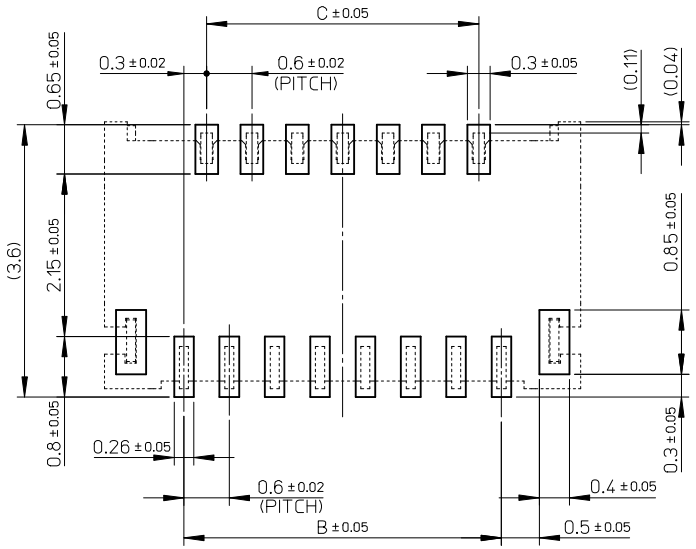

推奨基板レイアウト図（マウント面）

P.C.BOARD PATTERN
RECOMMENDED DIMENSION
(MOUNTING AREA)

注記 NOTES

1. 使用材料 MATERIAL
   ハウジング：液晶ポリマー ガラス充填 UL94V-0（ナチュラル）
   HOUSING : LIQUID CRYSTAL POLYMER (GLASS FILLED)
   UL94V-0(COLOR:NATURAL)
   アクチュエータ：ポリフェニレンサルファイド ガラス充填 UL94V-0 （黒）
   ACTUATOR : POLYPHENYLENE SULFIDE (GLASS FILLED)
   UL94V-0(COLOR:BLACK)
   ターミナル：銅ニッケルスズ合金、ニッケル下地部分金メッキ（接触部及びテール部）
   TERMINAL : COPPER NICKEL TIN ALOY,
   PARTLY GOLD(CONTACT,TAIL) OVER NICKEL PLATING
   ネイル：リン青銅、ニッケル下地錫めっき
   FITTING NAIL : PHOSPHOR-BRONZE, TIN OVER NICKEL PLATING
2. ソルダーテール半田付け面、及びネイル半田付け面の平坦度：0.1mmMAX.
   COPLANARITY OF SOLDER TAILS AND FITTING NAILS
   TO BE 0.1mm MAX.
3. 基板実装前にアクチュエータを操作しないで下さい。
   PLEASE DO NOT OPERATE THE ACTUATOR BEFORE MOUNTING.
   必ず基板に実装し、FPCを挿入してからアクチュエータを操作して下さい。
   PLEASE OPERATE THE ACTUATOR AFTER MOUNTING ON
   THE SUBSTRATE,AND MATING FPC.
4. 推奨メタルマスク RECOMMENDED METAL MASK SPECIFICATION
   マスク厚：0.1mm MASK THICKNESS : 0.1mm
   なお、貴社にて上記以外でご使用頂く場合は、事前に確認頂きますようお願い致します。
   WHEN USE IT OTHER THAN THE ABOVE IN YOUR COMPANY,
   PLEASE CONFIRM IT BEFOREHAND.
5. ELV 及び RoHS適合品
   ELV AND RoHS COMPLIANT.

SEE SHEET 1	EC NO: J2009-1500	DRWN:MTAKASAKI	2008/12/09
		CH'KD:MHAYASHI	2008/12/11
		APPR:NUKITA	2008/12/11
D			

DESCRIPTION

REV

GENERAL TOLERANCES (UNLESS SPECIFIED)

10 UNDER	±0.2
10 OVER 30 UNDER	±0.25
30 OVER	±0.3
ANGULAR	±3 °

DRAFT WHERE APPLICABLE MUST REMAIN WITHIN DIMENSIONS

DIMENSION STYLE: MM ONLY	SCALE: 10:1	DESIGN UNITS: METRIC	THIRD ANGLE PROJECTION
DRAWN BY: T.HIRAYAMA	DATE: 2008/01/31	TITLE: 0.3 FPC CONN E/O B/F HSG ASSY HGT=0.9MM	
CHECKED BY: K.MORIKAWA	DATE: 2008/01/31		
APPROVED BY: H.HIRATA	DATE: 2008/01/31	molex MOLEX INCORPORATED	
MATERIAL NO.: SEE SHEET 1		DOCUMENT NO.: SD-502250-003	SHEET NO.: 3 OF 3
SIZE: A3	THIS DRAWING CONTAINS INFORMATION THAT IS PROPRIETARY TO MOLEX INCORPORATED AND SHOULD NOT BE USED WITHOUT WRITTEN PERMISSION		

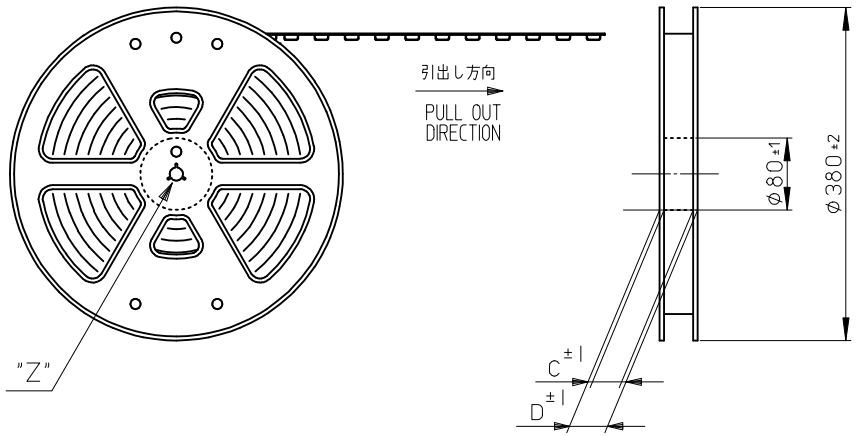

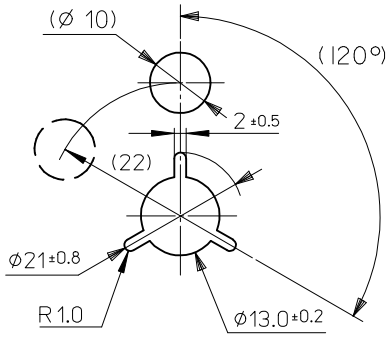

DETAIL "Z"

NOTES

1. 製品（502250-**20）の詳細寸法については、
   図面SD-502250-003をご参照ください
   IN THE PACKAGE, PART NO. 502250-**20 DETAILED DIMENSIONS, REFER TO SALES DRAWING NO. SD-502250-003.
2. 梱包数量： 3000 個／リール
   NUMBER OF CONNECTORS:3000 PCS/REEL
3. リードテープ長さ
   LEAD TAPE LENGTH

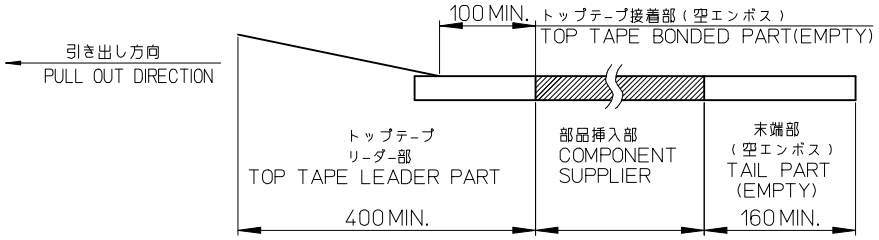

4. 材料(MATERIAL)
   キャリアテープ(CARRIER TAPE) : ポリスチレン(POLYSTYRENE)
   トップテープ(TOP TAPE) : PET, OTHER
   リール(REEL) : ポリスチレン(POLYSTYRENE)<リサイクル材を含む>
   <RECYCLE MATERILAL CONTAINED>
5. ELV 及び RoHS適合品
   ELV AND RoHS COMPLIANT.

REVISED			DESCRIPTION	REV
EC NO: J2009-1500				C
DRWN:MTAKASAKI	2008/12/09			
CH'KD:MHAYASHI	2008/12/11			
APPR:NUKITA	2008/12/11			

GENERAL TOLERANCES (UNLESS SPECIFIED)

10 UNDER	±0.2
10 OVER 30 UNDER	±0.25
30 OVER	±0.3
ANGULAR ±3 °	

DRAFT WHERE APPLICABLE MUST REMAIN WITHIN DIMENSIONS

DIMENSION STYLE: MM ONLY	SCALE: ---	DESIGN UNITS: METRIC	THIRD ANGLE PROJECTION
DRAWN BY: T.HIRAYAMA	DATE: 2008/01/31	TITLE: 0.3 FPC CONN E/O B/F HGT=0.9MM EMBSTP PKG	
CHECKED BY: K.MORIKAWA	DATE: 2008/01/31		
APPROVED BY: H.HIRATA	DATE: 2008/01/31	MOLEX INCORPORATED	
MATERIAL NO.: SEE CHART		DOCUMENT NO.: SD-502250-004	SHEET NO.: 1 OF 3
SIZE: A3	THIS DRAWING CONTAINS INFORMATION THAT IS PROPRIETARY TO MOLEX INCORPORATED AND SHOULD NOT BE USED WITHOUT WRITTEN PERMISSION		

502250-**91 | MODEL NO.

tb_frame_A3_J_ME_S
Rev. E 2006/04/15

EN-02JA(021)

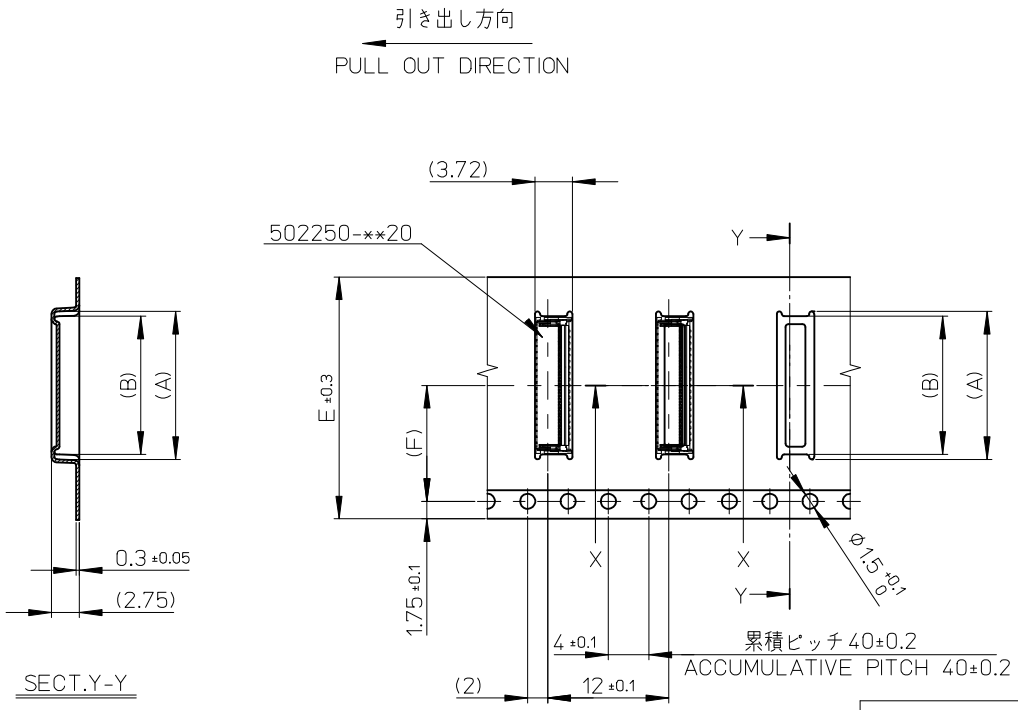

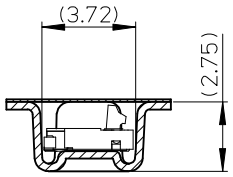

24	11.5	24	29.4	25.4	14.3	15.3	502250-4191	41
					13.7	14.7	502250-3991	39
					12.5	13.5	502250-3591	35
					11.9	12.9	502250-3391	33
					10.1	11.1	502250-2791	27
					8.9	9.9	502250-2391	23
					8.3	9.3	502250-2191	21
16	7.5	16	21.4	17.4	7.1	8.1	502250-1791	17
キャリアテープ幅 CARRIER TAPE WIDTH	(F)	E	D	C	(B)	(A)	製品番号 MATERIAL NO.	極数 CIRCUIT

MODEL No. 502250-**91

SEE SHEET 1
EC NO: J2009-1500
DRWN:MTAKASAKI 2008/12/09
CH'KD:MHAYASHI 2008/12/11
APPR:NUKITA 2008/12/11
DESCRIPTION
REV

GENERAL TOLERANCES (UNLESS SPECIFIED)

10 UNDER	±0.2
10 OVER 30 UNDER	±0.25
30 OVER	±0.3
ANGULAR ±3 °	

DRAFT WHERE APPLICABLE MUST REMAIN WITHIN DIMENSIONS

DIMENSION STYLE: MM ONLY
SCALE: ---
DESIGN UNITS: METRIC
THIRD ANGLE PROJECTION

DRAWN BY: T.HIRAYAMA DATE: 2008/01/31
CHECKED BY: K.MORIKAWA DATE: 2008/01/31
APPROVED BY: H.HIRATA DATE: 2008/01/31

TITLE: 0.3 FPC CONN E/O B/F HGT=0.9MM EMBSTP PKG

molex MOLEX INCORPORATED

MATERIAL NO.: SEE CHART
DOCUMENT NO.: SD-502250-004
SHEET NO.: 2 OF 3
SIZE: A3

THIS DRAWING CONTAINS INFORMATION THAT IS PROPRIETARY TO MOLEX INCORPORATED AND SHOULD NOT BE USED WITHOUT WRITTEN PERMISSION

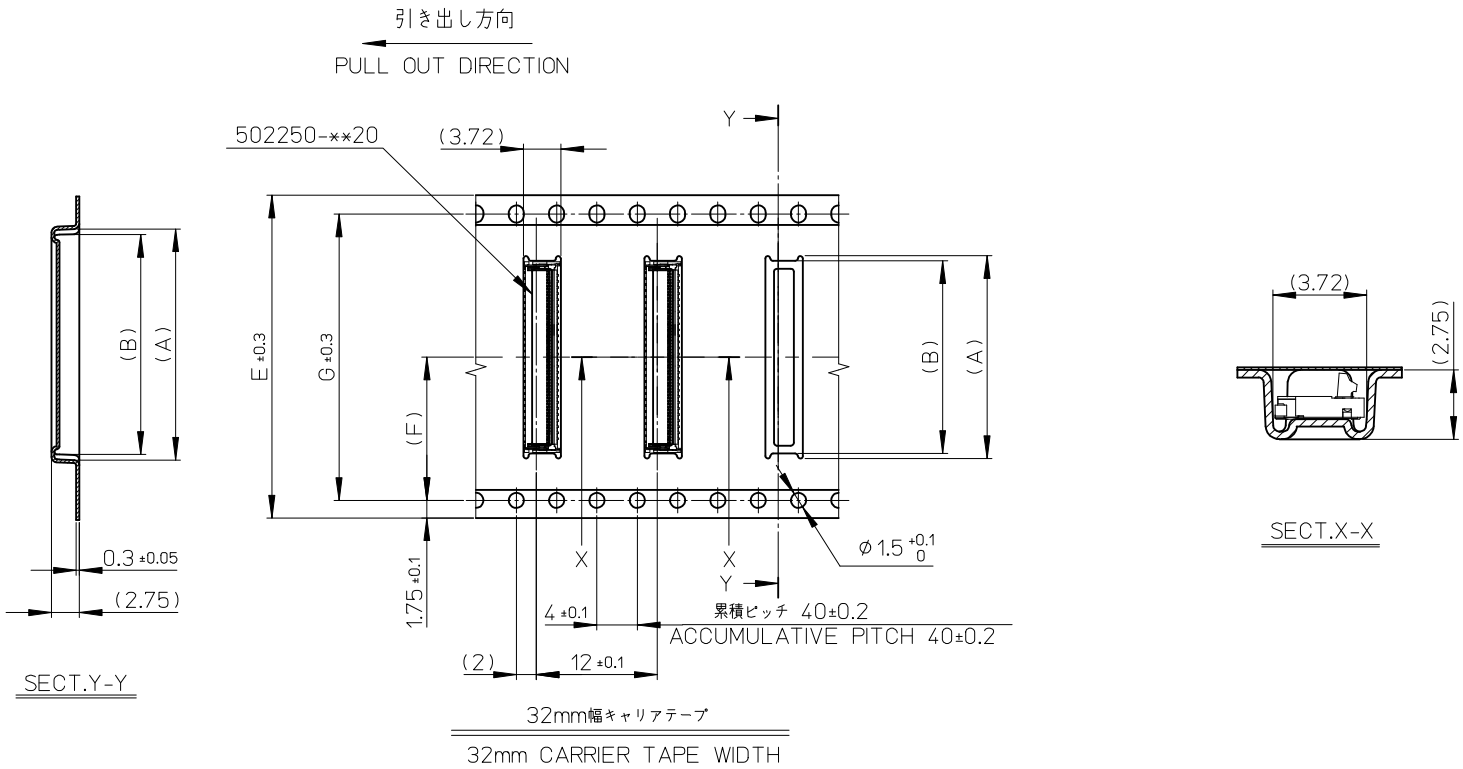

32	28.4	14.2	32	37.4	33.4	17.3	18.3	502250-5191	51
キャリアテープ幅 CARRIER TAPE WIDTH	G	(F)	E	D	C	(B)	(A)	製品番号 MATERIAL NO.	極数 CIRCUIT

MODEL No. 502250-**91

SEE SHEET 1
EC NO: J2009-1500
DRWN:MTAKASAKI 2008/12/09
CH'KD:MHAYASHI 2008/12/11
APPR:NUKITA 2008/12/11
DESCRIPTION
REV

GENERAL TOLERANCES (UNLESS SPECIFIED)

10 UNDER	±0.2
10 OVER 30 UNDER	±0.25
30 OVER	±0.3
ANGULAR ±3 °	

DRAFT WHERE APPLICABLE MUST REMAIN WITHIN DIMENSIONS

DIMENSION STYLE: MM ONLY
SCALE: ---
DESIGN UNITS: METRIC
THIRD ANGLE PROJECTION

DRAWN BY: T.HIRAYAMA DATE: 2008/01/31
CHECKED BY: K.MORIKAWA DATE: 2008/01/31
APPROVED BY: H.HIRATA DATE: 2008/01/31

TITLE: 0.3 FPC CONN E/O B/F HGT=0.9MM EMBSTP PKG

molex MOLEX INCORPORATED

MATERIAL NO.: SEE TABLE
DOCUMENT NO.: SD-502250-004
SHEET NO.: 3 OF 3
SIZE: A3

THIS DRAWING CONTAINS INFORMATION THAT IS PROPRIETARY TO MOLEX INCORPORATED AND SHOULD NOT BE USED WITHOUT WRITTEN PERMISSION

Общество с ограниченной ответственностью «МосЧип» ИНН 7719860671 / КПП 771901001
Адрес: 105318, г.Москва, ул.Щербаковская д.3, офис 1107

Данный компонент на территории Российской Федерации

Вы можете приобрести в компании MosChip.

Для оперативного оформления запроса Вам необходимо перейти по данной ссылке:

http://moschip.ru/get-element

Вы можете разместить у нас заказ для любого Вашего проекта, будь то серийное производство или разработка единичного прибора.

В нашем ассортименте представлены ведущие мировые производители активных и пассивных электронных компонентов.

Нашей специализацией является поставка электронной компонентной базы двойного назначения, продукции таких производителей как XILINX, Intel (ex.ALTERA), Vicor, Microchip, Texas Instruments, Analog Devices, Mini-Circuits, Amphenol, Glenair.

Сотрудничество с глобальными дистрибьюторами электронных компонентов, предоставляет возможность заказывать и получать с международных складов практически любой перечень компонентов в оптимальные для Вас сроки.

На всех этапах разработки и производства наши партнеры могут получить квалифицированную поддержку опытных инженеров.

Система менеджмента качества компании отвечает требованиям в соответствии с ГОСТ Р ИСО 9001, ГОСТ РВ 0015-002 и ЭС РД 009

Офис по работе с юридическими лицами:

105318, г.Москва, ул.Щербаковская д.3, офис 1107, 1118, ДЦ «Щербаковский»

Телефон: +7 495 668-12-70 (многоканальный)

Факс: +7 495 668-12-70 (доб.304)

E-mail: info@moschip.ru

Skype отдела продаж:
moschip.ru
moschip.ru_4
moschip.ru_6
moschip.ru_9