'90A, 'LS90 . . . Decade Counters

'92A, 'LS92 . . . Divide By-Twelve Counters

'93A, 'LS93 . . . 4-Bit Binary Counters

TYPES	TYPICAL POWER DISSIPATION
'90A	145 mW
'92A, '93A	130 mW
'LS90, 'LS92, 'LS93	45 mW

SN5490A, SN54LS90 . . . J OR W PACKAGE
SN7490A . . . N PACKAGE
SN74LS90 . . . D OR N PACKAGE
(TOP VIEW)

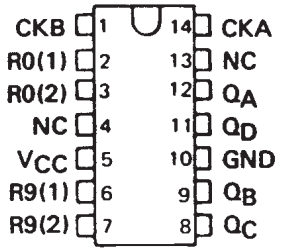

SN5492A, SN54LS92 . . . J OR W PACKAGE
SN7492A . . . N PACKAGE
SN74LS92 . . . D OR N PACKAGE
(TOP VIEW)

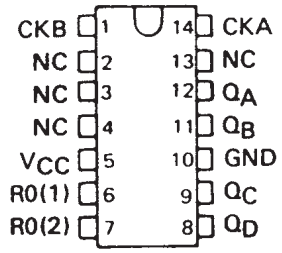

SN5493A, SN54LS93 . . . J OR W PACKAGE
SN7493 . . . N PACKAGE
SN74LS93 . . . D OR N PACKAGE
(TOP VIEW)

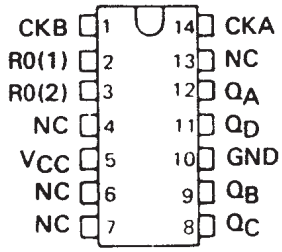

description

Each of these monolithic counters contains four master-slave flip-flops and additional gating to provide a divide-by-two counter and a three-stage binary counter for which the count cycle length is divide-by-five for the '90A and 'LS90, divide-by-six for the '92A and 'LS92, and the divide-by-eight for the '93A and 'LS93.

All of these counters have a gated zero reset and the '90A and 'LS90 also have gated set-to-nine inputs for use in BCD nine's complement applications.

To use their maximum count length (decade, divide-by-twelve, or four-bit binary) of these counters, the CKB input is connected to the Q_A output. The input count pulses are applied to CKA input and the outputs are as described in the appropriate function table. A symmetrical divide-by-ten count can be obtained from the '90A or 'LS90 counters by connecting the Q_D output to the CKA input and applying the input count to the CKB input which gives a divide-by-ten square wave at output Q_A.

PRODUCTION DATA information is current as of publication date. Products conform to specifications per the terms of Texas Instruments standard warranty. Production processing does not necessarily include testing of all parameters.

Copyright © 1988, Texas Instruments Incorporated

logic symbols†

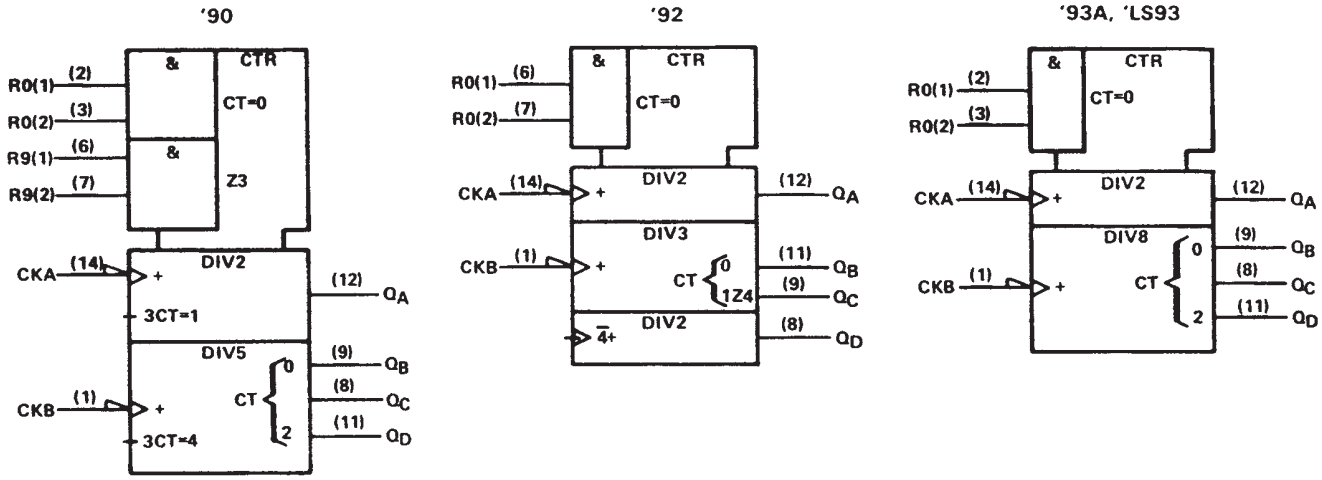

†These symbols are in accordance with ANSI/IEEE Std. 91-1984 and IEC Publication 617-12.

'90A, 'LS90
BCD COUNT SEQUENCE
(See Note A)

COUNT	OUTPUT			
	Q_D	Q_C	Q_B	Q_A
0	L	L	L	L
1	L	L	L	H
2	L	L	H	L
3	L	L	H	H
4	L	H	L	L
5	L	H	L	H
6	L	H	H	L
7	L	H	H	H
8	H	L	L	L
9	H	L	L	H

'90A, 'LS90
BI-QUINARY (5-2)
(See Note B)

COUNT	OUTPUT			
	Q_A	Q_D	Q_C	Q_B
0	L	L	L	L
1	L	L	L	H
2	L	L	H	L
3	L	L	H	H
4	L	H	L	L
5	H	L	L	L
6	H	L	L	H
7	H	L	H	L
8	H	L	H	H
9	H	H	L	L

'92A, 'LS92
COUNT SEQUENCE
(See Note C)

COUNT	OUTPUT			
	Q_D	Q_C	Q_B	Q_A
0	L	L	L	L
1	L	L	L	H
2	L	L	H	L
3	L	L	H	H
4	L	H	L	L
5	L	H	L	H
6	H	L	L	L
7	H	L	L	H
8	H	L	H	L
9	H	L	H	H
10	H	H	L	L
11	H	H	L	H

'90A, 'LS90
RESET/COUNT FUNCTION TABLE

RESET INPUTS				OUTPUT			
$R_{0(1)}$	$R_{0(2)}$	$R_{9(1)}$	$R_{9(2)}$	Q_D	Q_C	Q_B	Q_A
H	H	L	X	L	L	L	L
H	H	X	L	L	L	L	L
X	X	H	H	H	L	L	H
X	L	X	L	COUNT			
L	X	L	X	COUNT			
L	X	X	L	COUNT			
X	L	L	X	COUNT			

'92A, 'LS92, '93A, 'LS93
RESET/COUNT FUNCTION TABLE

RESET INPUTS		OUTPUT			
$R_{0(1)}$	$R_{0(2)}$	Q_D	Q_C	Q_B	Q_A
H	H	L	L	L	L
L	X	COUNT			
X	L	COUNT			

'93A, 'LS93
COUNT SEQUENCE
(See Note C)

COUNT	OUTPUT			
	Q_D	Q_C	Q_B	Q_A
0	L	L	L	L
1	L	L	L	H
2	L	L	H	L
3	L	L	H	H
4	L	H	L	L
5	L	H	L	H
6	L	H	H	L
7	L	H	H	H
8	H	L	L	L
9	H	L	L	H
10	H	L	H	L
11	H	L	H	H
12	H	H	L	L
13	H	H	L	H
14	H	H	H	L
15	H	H	H	H

NOTES: A. Output Q_A is connected to input CKB for BCD count.
B. Output Q_D is connected to input CKA for bi-quinary count.
C. Output Q_A is connected to input CKB.
D. H = high level, L = low level, X = irrelevant

logic diagrams (positive logic)

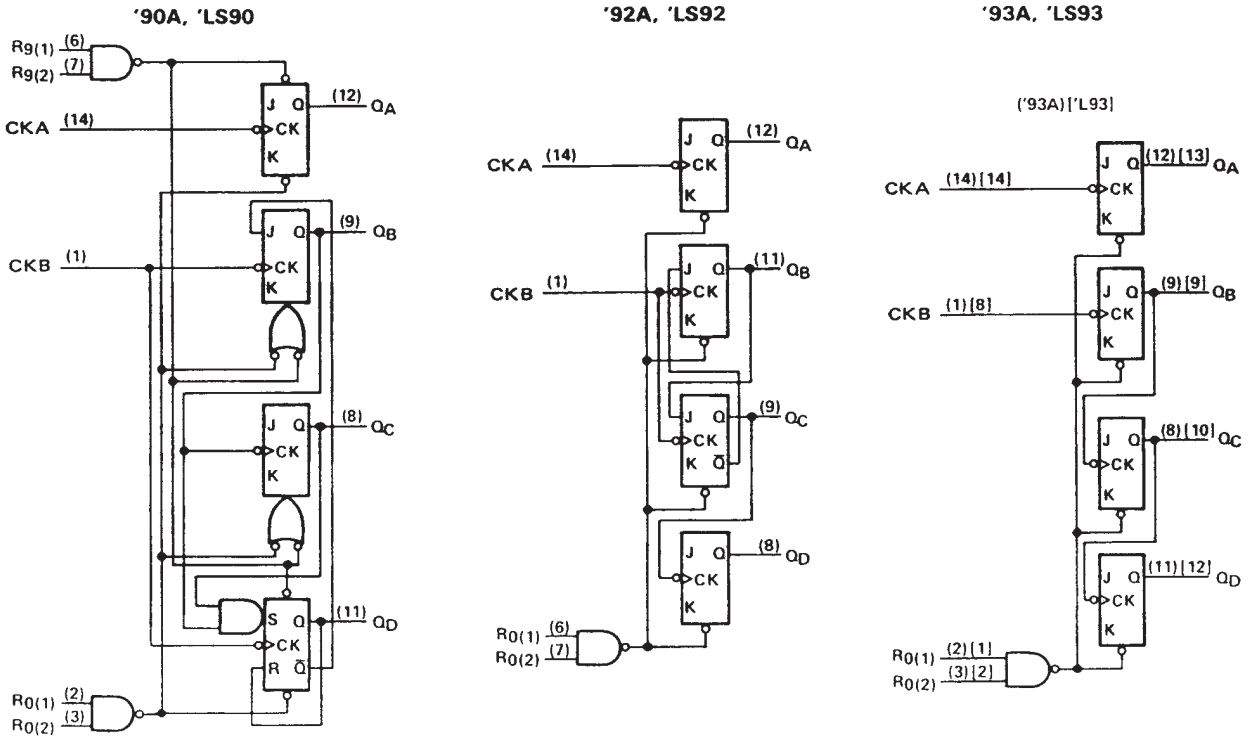

The J and K inputs shown without connection are for reference only and are functionally at a high level.
Pin numbers shown in ( ) are for the 'LS93 and '93A and pin numbers shown in [ ] are for the 54L93.

schematics of inputs and outputs

'90A, '92A, '93A

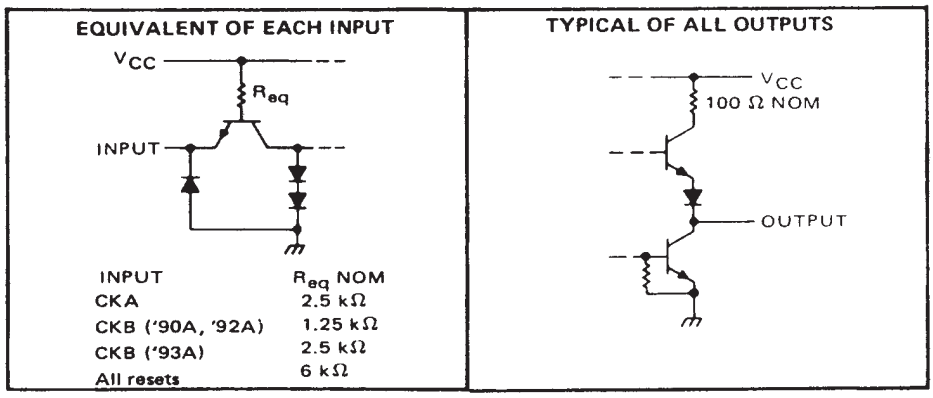

INPUT	R_{eq} NOM
CKA	2.5 kΩ
CKB ('90A, '92A)	1.25 kΩ
CKB ('93A)	2.5 kΩ
All resets	6 kΩ

schematics of inputs and outputs (continued)

'LS90, 'LS92, 'LS93

EQUIVALENT OF EACH RESET INPUT

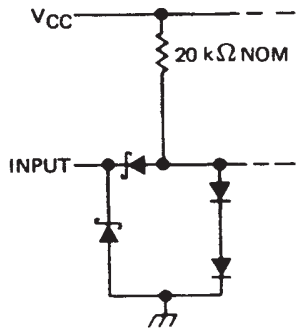

EQUIVALENT OF A AND B INPUTS

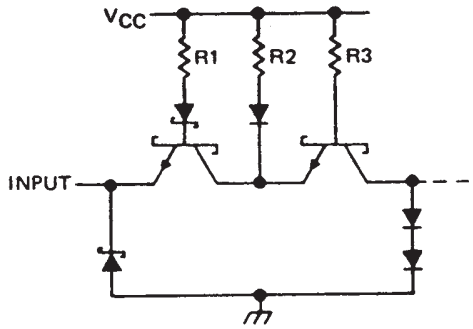

INPUT	NOMINAL VALUES R1	R2	R3
CKA	10 kΩ	10 kΩ	10 kΩ
CKB ('LS90, 'LS92)	6.7 kΩ	6.7 kΩ	5 kΩ
CKB ('LS93)	15 kΩ	15 kΩ	10 kΩ

TYPICAL OF ALL OUTPUTS

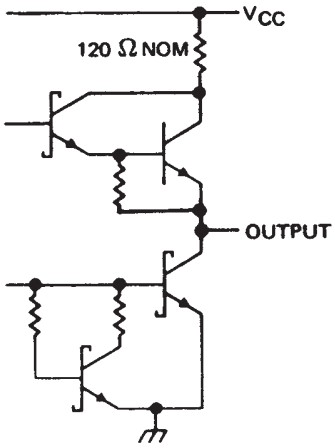

absolute maximum ratings over operating free-air temperature range (unless otherwise noted)

Supply voltage, V_{CC} (see Note 1)		7 V
Input voltage		5.5 V
Interemitter voltage (see Note 2)		5.5 V
Operating free-air temperature range:	SN5490A, SN5492A, SN5493A	−55°C to 125°C
	SN7490A, SN7492A, SN7493A	0°C to 70°C
Storage temperature range		−65°C to 150°C

NOTES: 1. Voltage values, except interemitter voltage, are with respect to network ground terminal.
2. This is the voltage between two emitters of a multiple-emitter transistor. For these circuits, this rating applies between the two R_0 inputs, and for the '90A circuit, it also applies between the two R_9 inputs.

recommended operating conditions

		SN5490A, SN5492A SN5493A			SN7490A, SN7492A SN7493A			UNIT
		MIN	NOM	MAX	MIN	NOM	MAX	
Supply voltage, V_{CC}		4.5	5	5.5	4.75	5	5.25	V
High-level output current, I_{OH}				−800			−800	μA
Low-level output current, I_{OL}				16			16	mA
Count frequency, f_{count} (see Figure 1)	A input	0		32	0		32	MHz
	B input	0		16	0		16	
Pulse width, t_w	A input	15			15			ns
	B input	30			30			
	Reset inputs	15			15			
Reset inactive-state setup time, t_{su}		25			25			ns
Operating free-air temperature, T_A		−55		125	0		70	°C

electrical characteristics over recommended operating free-air temperature range (unless otherwise noted)

PARAMETER ¶			TEST CONDITIONS†		'90A MIN	'90A TYP‡	'90A MAX	'92A MIN	'92A TYP‡	'92A MAX	'93A MIN	'93A TYP‡	'93A MAX	UNIT
V_{IH}	High-level input voltage				2			2			2			V
V_{IL}	Low-level input voltage						0.8			0.8			0.8	V
V_{IK}	Input clamp voltage		V_{CC} = MIN, I_I = −12 mA				−1.5			−1.5			−1.5	V
V_{OH}	High-level output voltage		V_{CC} = MIN, V_{IH} = 2 V, V_{IL} = 0.8 V, I_{OH} = −800 μA		2.4	3.4		2.4	3.4		2.4	3.4		V
V_{OL}	Low-level output voltage		V_{CC} = MIN, V_{IH} = 2 V, V_{IL} = 0.8 V, I_{OL} = 16 mA¶			0.2	0.4		0.2	0.4		0.2	0.4	V
I_I	Input current at maximum input voltage		V_{CC} = MAX, V_I = 5.5 V				1			1			1	mA
I_{IH}	High-level input current	Any reset	V_{CC} = MAX, V_I = 2.4 V				40			40			40	μA
		CKA					80			80			80	
		CKB					120			120			80	
I_{IL}	Low-level input current	Any reset	V_{CC} = MAX, V_I = 0.4 V				−1.6			−1.6			−1.6	mA
		CKA					−3.2			−3.2			−3.2	
		CKB					−4.8			−4.8			−3.2	
I_{OS}	Short-circuit output current§		V_{CC} = MAX	SN54'	−20		−57	−20		−57	−20		−57	mA
				SN74'	−18		−57	−18		−57	−18		−57	
I_{CC}	Supply current		V_{CC} = MAX, See Note 3			29	42		26	39		26	39	mA

†For conditions shown as MIN or MAX, use the appropriate value specified under recommended operating conditions.
‡All typical values are at V_{CC} = 5 V, T_A = 25°C.
§Not more than one output should be shorted at a time.
¶Q_A outputs are tested at I_{OL} = 16 mA plus the limit value for I_{IL} for the CKB input. This permits driving the CKB input while maintaining full fan-out capability.
NOTE 3: I_{CC} is measured with all outputs open, both R_0 inputs grounded following momentary connection to 4.5 V, and all other inputs grounded.

switching characteristics, V_{CC} = 5 V, T_A = 25°C

PARAMETER†	FROM (INPUT)	TO (OUTPUT)	TEST CONDITIONS	'90A			'92A			'93A			UNIT
				MIN	TYP	MAX	MIN	TYP	MAX	MIN	TYP	MAX	
f_{max}	CKA	Q_A	C_L = 15 pF, R_L = 400 Ω, See Figure 1	32	42		32	42		32	42		MHz
	CKB	Q_B		16			16			16			
t_{PLH}	CKA	Q_A			10	16		10	16		10	16	ns
t_{PHL}					12	18		12	18		12	18	
t_{PLH}	CKA	Q_D			32	48		32	48		46	70	ns
t_{PHL}					34	50		34	50		46	70	
t_{PLH}	CKB	Q_B			10	16		10	16		10	16	ns
t_{PHL}					14	21		14	21		14	21	
t_{PLH}	CKB	Q_C			21	32		10	16		21	32	ns
t_{PHL}					23	35		14	21		23	35	
t_{PLH}	CKB	Q_D			21	32		21	32		34	51	ns
t_{PHL}					23	35		23	35		34	51	
t_{PHL}	Set-to-0	Any			26	40		26	40		26	40	ns
t_{PLH}	Set-to-9	Q_A, Q_D			20	30							ns
t_{PHL}		Q_B, Q_C			26	40							

†f_{max} = maximum count frequency
t_{PLH} = propagation delay time, low-to-high-level output
t_{PHL} = propagation delay time, high-to-low-level output

absolute maximum ratings over operating free-air temperature range (unless otherwise noted)

Supply voltage, V_{CC} (see Note 1)		7 V
Input voltage: R inputs		7 V
A and B inputs		5.5 V
Operating free-air temperature range:	SN54LS' Circuits	−55°C to 125°C
	SN74LS' Circuits	0°C to 70°C
Storage temperature range		−65°C to 150°C

NOTE 1: Voltage values are with respect to network ground terminal.

recommended operating conditions

		SN54LS90 SN54LS92 SN54LS93			SN74LS90 SN74LS92 SN74LS93			UNIT
		MIN	NOM	MAX	MIN	NOM	MAX	
Supply voltage, V_{CC}		4.5	5	5.5	4.75	5	5.25	V
High-level output current, I_{OH}				−400			−400	μA
Low-level output current, I_{OL}				4			8	mA
Count frequency, f_{count} (see Figure 1)	A input	0		32	0		32	MHz
	B input	0		16	0		16	
Pulse width, t_w	A input	15			15			ns
	B input	30			30			
	Reset inputs	30			30			
Reset inactive-state setup time, t_{su}		25			25			ns
Operating free-air temperature, T_A		−55		125	0		70	°C

electrical characteristics over recommended operating free-air temperature range (unless otherwise noted)

PARAMETER			TEST CONDITIONS†			SN54LS90 SN54LS92			SN74LS90 SN74LS92			UNIT
						MIN	TYP‡	MAX	MIN	TYP‡	MAX	
V_{IH}	High-level input voltage					2			2			V
V_{IL}	Low-level input voltage							0.7			0.8	V
V_{IK}	Input clamp voltage		V_{CC} = MIN,	I_I = −18 mA				−1.5			−1.5	V
V_{OH}	High-level output voltage		V_{CC} = MIN, V_{IL} = V_{ILmax},	V_{IH} = 2 V, I_{OH} = −400 μA		2.5	3.4		2.7	3.4		V
V_{OL}	Low-level output voltage		V_{CC} = MIN, V_{IL} = V_{IL} max,	V_{IH} = 2 V,	I_{OL} = 4 mA¶		0.25	0.4		0.25	0.4	V
					I_{OL} = 8 mA¶					0.35	0.5	
I_I	Input current at maximum input voltage	Any reset	V_{CC} = MAX,	V_I = 7 V				0.1			0.1	mA
		CKA	V_{CC} = MAX,	V_I = 5.5 V				0.2			0.2	
		CKB						0.4			0.4	
I_{IH}	High-level input current	Any reset	V_{CC} = MAX,	V_I = 2.7 V				20			20	μA
		CKA						40			40	
		CKB						80			80	
I_{IL}	Low-level input current	Any reset	V_{CC} = MAX,	V_I = 0.4 V				−0.4			−0.4	mA
		CKA						−2.4			−2.4	
		CKB						−3.2			−3.2	
I_{OS}	Short-circuit output current§		V_{CC} = MAX			−20		−100	−20		−100	mA
I_{CC}	Supply current		V_{CC} = MAX,	See Note 3	'LS90		9	15		9	15	mA
					'LS92		9	15		9	15	

†For conditions shown as MIN or MAX, use the appropriate value specified under recommended operating conditions.
‡All typical values are at V_{CC} = 5 V, T_A = 25°C.
§Not more than one output should be shorted at a time, and duration of the short-circuit should not exceed one second.
¶Q_A outputs are tested at specified I_{OL} plus the limit value of I_{IL} for the CKB input. This permits driving the CKB input while maintaining full fan-out capability.

NOTE 3: I_{CC} is measured with all outputs open, both R_O inputs grounded following momentary connection to 4.5 V, and all other inputs grounded.

electrical characteristics over recommended operating free-air temperature range (unless otherwise noted)

PARAMETER			TEST CONDITIONS†			SN54LS93 MIN	SN54LS93 TYP‡	SN54LS93 MAX	SN74LS93 MIN	SN74LS93 TYP‡	SN74LS93 MAX	UNIT
V_{IH}	High-level input voltage					2			2			V
V_{IL}	Low-level input voltage							0.7			0.8	V
V_{IK}	Input clamp voltage		V_{CC} = MIN,	I_I = −18 mA				−1.5			−1.5	V
V_{OH}	High-level output voltage		V_{CC} = MIN, V_{IL} = V_{IL} max,	V_{IH} = 2 V, I_{OH} = −400 μA		2.5	3.4		2.7	3.4		V
V_{OL}	Low-level output voltage		V_{CC} = MIN, V_{IL} = V_{IL} max	V_{IH} = 2 V,	I_{OL} = 4 mA¶		0.25	0.4		0.25	0.4	V
					I_{OL} = 8 mA¶					0.35	0.5	
I_I	Input current at maximum input voltage	Any reset	V_{CC} = MAX,	V_I = 7 V				0.1			0.1	mA
		CKA or CKB	V_{CC} = MAX,	V_I = 5.5 V				0.2			0.2	
I_{IH}	High-level input current	Any reset	V_{CC} = MAX,	V_I = 2.7 V				20			20	μA
		CKA or CKB						40			80	
I_{IL}	Low-level input current	Any reset	V_{CC} = MAX,	V_I = 0.4 V				−0.4			−0.4	mA
		CKA						−2.4			−2.4	
		CKB						−1.6			−1.6	
I_{OS}	Short-circuit output current§		V_{CC} = MAX			−20		−100	−20		−100	mA
I_{CC}	Supply current		V_{CC} = MAX,	See Note 3			9	15		9	15	mA

†For conditions shown as MIN or MAX, use the appropriate value specified under recommended operating conditions.
‡All typical values are at V_{CC} = 5 V, T_A = 25°C.
§Not more than one output should be shorted at a time, and duration of the short-circuit should not exceed one second.
¶Q_A outputs are tested at specified I_{OL} plus the limit value for I_{IL} for the CKB input. This permits driving the CKB input while maintaining full fan-out capability.
NOTE 3: I_{CC} is measured with all outputs open, both R_0 inputs grounded following momentary connection to 4.5 V, and all other inputs grounded.

switching characteristics, V_{CC} = 5 V, T_A = 25°C

PARAMETER#	FROM (INPUT)	TO (OUTPUT)	TEST CONDITIONS	'LS90 MIN	'LS90 TYP	'LS90 MAX	'LS92 MIN	'LS92 TYP	'LS92 MAX	'LS93 MIN	'LS93 TYP	'LS93 MAX	UNIT
f_{max}	CKA	Q_A	C_L = 15 pF, R_L = 2 kΩ, See Figure 1	32	42		32	42		32	42		MHz
	CKB	Q_B		16			16			16			
t_{PLH}	CKA	Q_A			10	16		10	16		10	16	ns
t_{PHL}					12	18		12	18		12	18	
t_{PLH}	CKA	Q_D			32	48		32	48		46	70	ns
t_{PHL}					34	50		34	50		46	70	
t_{PLH}	CKB	Q_B			10	16		10	16		10	16	ns
t_{PHL}					14	21		14	21		14	21	
t_{PLH}	CKB	Q_C			21	32		10	16		21	32	ns
t_{PHL}					23	35		14	21		23	35	
t_{PLH}	CKB	Q_D			21	32		21	32		34	51	ns
t_{PHL}					23	35		23	35		34	51	
t_{PHL}	Set-to-0	Any			26	40		26	40		26	40	ns
t_{PLH}	Set-to-9	Q_A, Q_D			20	30							ns
t_{PHL}		Q_B, Q_C			26	40							

#f_{max} = maximum count frequency
t_{PLH} = propagation delay time, low-to-high-level output
t_{PHL} = propagation delay time, high-to-low-level output

PARAMETER MEASUREMENT INFORMATION

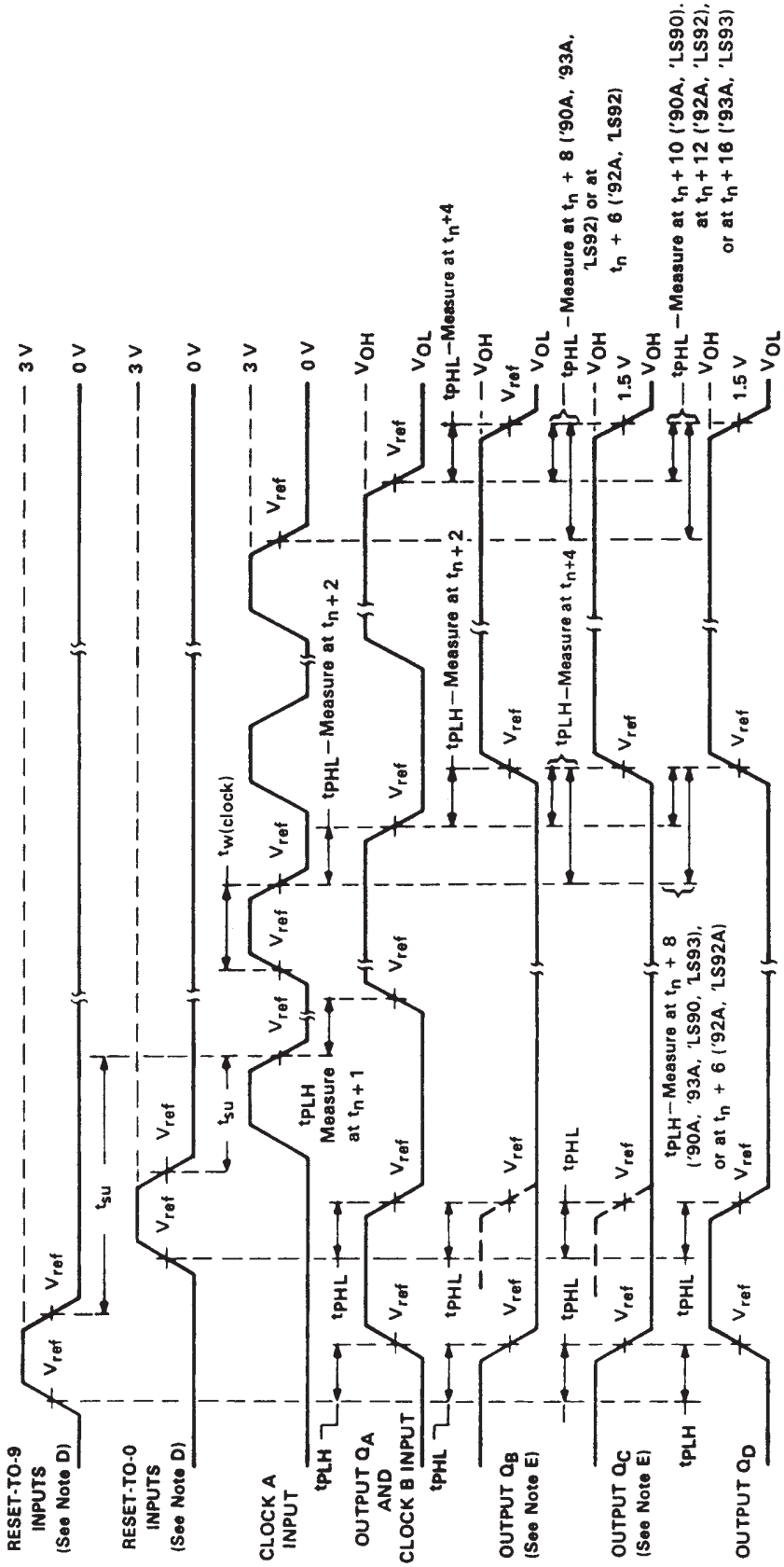

NOTES:
A. Input pulses are supplied by a generator having the following characteristics: for '90A, '92A, '93A, $t_r \le 5$ ns, $t_f \le 5$ ns, PRR = 1 MHz, duty cycle = 50%, $Z_{out} \approx 50$ ohms; for 'LS90, 'LS92, 'LS93, $t_r \le 15$ ns, $t_f \le 5$ ns, PRR = 1 MHz, duty cycle = 50%, $Z_{out} \approx 50$ ohms.
B. C_L includes probe and jig capacitance.
C. All diodes are 1N3064 or equivalent.
D. Each reset input is tested separately with the other reset at 4.5 V.
E. Reference waveforms are shown with dashed lines.
F. For '90A, '92A, and '93A; V_{ref} = 1.5 V. For 'LS90, 'LS92, and 'LS93; V_{ref} = 1.3 V.

FIGURE 1A

PARAMETER MEASUREMENT INFORMATION

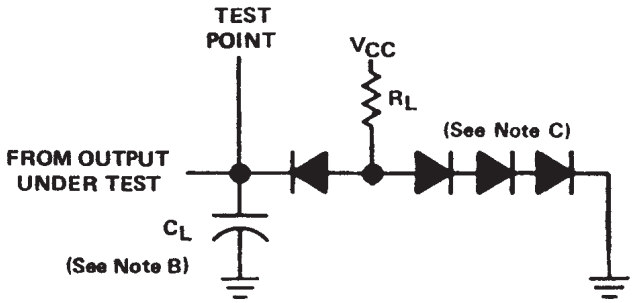

LOAD CIRCUIT

NOTES: A. Input pulses are supplied by a generator having the following characteristics:
for '90A, '92A, '93A, $t_r \leq 5$ ns, $t_f \leq 5$ ns, PRR = 1 MHz, duty cycle = 50%, $Z_{out} \approx 50$ ohms;
for 'LS90, 'LS92, 'LS93, $t_r \leq 15$ ns, $t_f \leq 5$ ns, PRR = 1 MHz, duty cycle = 50%, $Z_{out} \approx 50$ ohms.
B. C_L includes probe and jig capacitance.
C. All diodes are 1N3064 or equivalent.
D. Each reset input is tested separately with the other reset at 4.5 V.
E. Reference waveforms are shown with dashed lines.
F. For '90A, '92A, and '93A; V_{ref} = 1.5 V. For 'LS90, 'LS92, and 'LS93; V_{ref} = 1.3 V.

FIGURE 1B

PACKAGING INFORMATION

Orderable Device	Status (1)	Package Type	Package Drawing	Pins	Package Qty	Eco Plan (2)	Lead/Ball Finish	MSL Peak Temp (3)	Op Temp (°C)	Top-Side Markings (4)	Samples
7603201CA	ACTIVE	CDIP	J	14	1	TBD	Call TI	Call TI	-55 to 125	7603201CA SNJ54LS90J	Samples
7603201DA	ACTIVE	CFP	W	14	1	TBD	Call TI	Call TI	-55 to 125	7603201DA SNJ54LS90W	Samples
7700101CA	ACTIVE	CDIP	J	14	1	TBD	Call TI	Call TI	-55 to 125	7700101CA SNJ54LS93J	Samples
7700101DA	ACTIVE	CFP	W	14	1	TBD	Call TI	Call TI	-55 to 125	7700101DA SNJ54LS93W	Samples
JM38510/31501BCA	ACTIVE	CDIP	J	14	1	TBD	A42	N / A for Pkg Type	-55 to 125	JM38510/ 31501BCA	Samples
JM38510/31501BDA	ACTIVE	CFP	W	14	1	TBD	A42	N / A for Pkg Type	-55 to 125	JM38510/ 31501BDA	Samples
JM38510/31502BCA	ACTIVE	CDIP	J	14	1	TBD	A42	N / A for Pkg Type	-55 to 125	JM38510/ 31502BCA	Samples
JM38510/31502BDA	ACTIVE	CFP	W	14	1	TBD	A42	N / A for Pkg Type	-55 to 125	JM38510/ 31502BDA	Samples
M38510/31501BCA	ACTIVE	CDIP	J	14	1	TBD	A42	N / A for Pkg Type	-55 to 125	JM38510/ 31501BCA	Samples
M38510/31501BDA	ACTIVE	CFP	W	14	1	TBD	A42	N / A for Pkg Type	-55 to 125	JM38510/ 31501BDA	Samples
M38510/31502BCA	ACTIVE	CDIP	J	14	1	TBD	A42	N / A for Pkg Type	-55 to 125	JM38510/ 31502BCA	Samples
M38510/31502BDA	ACTIVE	CFP	W	14	1	TBD	A42	N / A for Pkg Type	-55 to 125	JM38510/ 31502BDA	Samples
SN5490AJ	OBSOLETE	CDIP	J	14		TBD	Call TI	Call TI	-55 to 125		
SN5492AJ	OBSOLETE	CDIP	J	14		TBD	Call TI	Call TI	-55 to 125		
SN54LS90J	ACTIVE	CDIP	J	14	1	TBD	A42	N / A for Pkg Type	-55 to 125	SN54LS90J	Samples
SN54LS93J	ACTIVE	CDIP	J	14	1	TBD	A42	N / A for Pkg Type	-55 to 125	SN54LS93J	Samples
SN7490AN	OBSOLETE	PDIP	N	14		TBD	Call TI	Call TI	0 to 70		
SN7492AN	OBSOLETE	PDIP	N	14		TBD	Call TI	Call TI	0 to 70		
SN7493AN	OBSOLETE	PDIP	N	14		TBD	Call TI	Call TI	0 to 70		
SN74LS90-W	ACTIVE	WAFERSALE	YS	0	7303	TBD	Call TI	Call TI			Samples

Orderable Device	Status (1)	Package Type	Package Drawing	Pins	Package Qty	Eco Plan (2)	Lead/Ball Finish	MSL Peak Temp (3)	Op Temp (°C)	Top-Side Markings (4)	Samples
SN74LS90D	ACTIVE	SOIC	D	14	50	Green (RoHS & no Sb/Br)	CU NIPDAU	Level-1-260C-UNLIM	0 to 70	LS90	Samples
SN74LS90DE4	ACTIVE	SOIC	D	14	50	Green (RoHS & no Sb/Br)	CU NIPDAU	Level-1-260C-UNLIM	0 to 70	LS90	Samples
SN74LS90DG4	ACTIVE	SOIC	D	14	50	Green (RoHS & no Sb/Br)	CU NIPDAU	Level-1-260C-UNLIM	0 to 70	LS90	Samples
SN74LS90DR	ACTIVE	SOIC	D	14	2500	Green (RoHS & no Sb/Br)	CU NIPDAU	Level-1-260C-UNLIM	0 to 70	LS90	Samples
SN74LS90DRE4	ACTIVE	SOIC	D	14	2500	Green (RoHS & no Sb/Br)	CU NIPDAU	Level-1-260C-UNLIM	0 to 70	LS90	Samples
SN74LS90DRG4	ACTIVE	SOIC	D	14	2500	Green (RoHS & no Sb/Br)	CU NIPDAU	Level-1-260C-UNLIM	0 to 70	LS90	Samples
SN74LS90N	ACTIVE	PDIP	N	14	25	Pb-Free (RoHS)	CU NIPDAU	N / A for Pkg Type	0 to 70	SN74LS90N	Samples
SN74LS90NE4	ACTIVE	PDIP	N	14	25	Pb-Free (RoHS)	CU NIPDAU	N / A for Pkg Type	0 to 70	SN74LS90N	Samples
SN74LS92D	ACTIVE	SOIC	D	14	50	Green (RoHS & no Sb/Br)	CU NIPDAU	Level-1-260C-UNLIM	0 to 70	LS92	Samples
SN74LS92DE4	ACTIVE	SOIC	D	14	50	Green (RoHS & no Sb/Br)	CU NIPDAU	Level-1-260C-UNLIM	0 to 70	LS92	Samples
SN74LS92DG4	ACTIVE	SOIC	D	14	50	Green (RoHS & no Sb/Br)	CU NIPDAU	Level-1-260C-UNLIM	0 to 70	LS92	Samples
SN74LS92N	ACTIVE	PDIP	N	14	25	Pb-Free (RoHS)	CU NIPDAU	N / A for Pkg Type	0 to 70	SN74LS92N	Samples
SN74LS92N3	OBSOLETE	PDIP	N	14		TBD	Call TI	Call TI	0 to 70		
SN74LS92NE4	ACTIVE	PDIP	N	14	25	Pb-Free (RoHS)	CU NIPDAU	N / A for Pkg Type	0 to 70	SN74LS92N	Samples
SN74LS92NSR	ACTIVE	SO	NS	14	2000	Green (RoHS & no Sb/Br)	CU NIPDAU	Level-1-260C-UNLIM	0 to 70	74LS92	Samples
SN74LS92NSRE4	ACTIVE	SO	NS	14	2000	Green (RoHS & no Sb/Br)	CU NIPDAU	Level-1-260C-UNLIM	0 to 70	74LS92	Samples
SN74LS92NSRG4	ACTIVE	SO	NS	14	2000	Green (RoHS & no Sb/Br)	CU NIPDAU	Level-1-260C-UNLIM	0 to 70	74LS92	Samples
SN74LS93D	ACTIVE	SOIC	D	14	50	Green (RoHS & no Sb/Br)	CU NIPDAU	Level-1-260C-UNLIM	0 to 70	LS93	Samples

Orderable Device	Status (1)	Package Type	Package Drawing	Pins	Package Qty	Eco Plan (2)	Lead/Ball Finish	MSL Peak Temp (3)	Op Temp (°C)	Top-Side Markings (4)	Samples
SN74LS93DE4	ACTIVE	SOIC	D	14	50	Green (RoHS & no Sb/Br)	CU NIPDAU	Level-1-260C-UNLIM	0 to 70	LS93	Samples
SN74LS93DG4	ACTIVE	SOIC	D	14	50	Green (RoHS & no Sb/Br)	CU NIPDAU	Level-1-260C-UNLIM	0 to 70	LS93	Samples
SN74LS93N	ACTIVE	PDIP	N	14	25	Pb-Free (RoHS)	CU NIPDAU	N / A for Pkg Type	0 to 70	SN74LS93N	Samples
SN74LS93N3	OBSOLETE	PDIP	N	14		TBD	Call TI	Call TI	0 to 70		
SN74LS93NE4	ACTIVE	PDIP	N	14	25	Pb-Free (RoHS)	CU NIPDAU	N / A for Pkg Type	0 to 70	SN74LS93N	Samples
SN74LS93NSR	ACTIVE	SO	NS	14	2000	Green (RoHS & no Sb/Br)	CU NIPDAU	Level-1-260C-UNLIM	0 to 70	74LS93	Samples
SN74LS93NSRE4	ACTIVE	SO	NS	14	2000	Green (RoHS & no Sb/Br)	CU NIPDAU	Level-1-260C-UNLIM	0 to 70	74LS93	Samples
SN74LS93NSRG4	ACTIVE	SO	NS	14	2000	Green (RoHS & no Sb/Br)	CU NIPDAU	Level-1-260C-UNLIM	0 to 70	74LS93	Samples
SNJ5490AJ	OBSOLETE	CDIP	J	14		TBD	Call TI	Call TI	-55 to 125		
SNJ5490AW	OBSOLETE	CFP	W	14		TBD	Call TI	Call TI	-55 to 125		
SNJ5492AJ	OBSOLETE	CDIP	J	14		TBD	Call TI	Call TI	-55 to 125		
SNJ5492AW	OBSOLETE	CFP	W	14		TBD	Call TI	Call TI	-55 to 125		
SNJ54LS90J	ACTIVE	CDIP	J	14	1	TBD	A42	N / A for Pkg Type	-55 to 125	7603201CA SNJ54LS90J	Samples
SNJ54LS90W	ACTIVE	CFP	W	14	1	TBD	A42	N / A for Pkg Type	-55 to 125	7603201DA SNJ54LS90W	Samples
SNJ54LS93J	ACTIVE	CDIP	J	14	1	TBD	A42	N / A for Pkg Type	-55 to 125	7700101CA SNJ54LS93J	Samples
SNJ54LS93W	ACTIVE	CFP	W	14	1	TBD	A42	N / A for Pkg Type	-55 to 125	7700101DA SNJ54LS93W	Samples

(1) The marketing status values are defined as follows:
ACTIVE: Product device recommended for new designs.
LIFEBUY: TI has announced that the device will be discontinued, and a lifetime-buy period is in effect.
NRND: Not recommended for new designs. Device is in production to support existing customers, but TI does not recommend using this part in a new design.
PREVIEW: Device has been announced but is not in production. Samples may or may not be available.
OBSOLETE: TI has discontinued the production of the device.

(2) Eco Plan - The planned eco-friendly classification: Pb-Free (RoHS), Pb-Free (RoHS Exempt), or Green (RoHS & no Sb/Br) - please check http://www.ti.com/productcontent for the latest availability information and additional product content details.
TBD: The Pb-Free/Green conversion plan has not been defined.
Pb-Free (RoHS): TI's terms "Lead-Free" or "Pb-Free" mean semiconductor products that are compatible with the current RoHS requirements for all 6 substances, including the requirement that lead not exceed 0.1% by weight in homogeneous materials. Where designed to be soldered at high temperatures, TI Pb-Free products are suitable for use in specified lead-free processes.
Pb-Free (RoHS Exempt): This component has a RoHS exemption for either 1) lead-based flip-chip solder bumps used between the die and package, or 2) lead-based die adhesive used between the die and leadframe. The component is otherwise considered Pb-Free (RoHS compatible) as defined above.
Green (RoHS & no Sb/Br): TI defines "Green" to mean Pb-Free (RoHS compatible), and free of Bromine (Br) and Antimony (Sb) based flame retardants (Br or Sb do not exceed 0.1% by weight in homogeneous material)

(3) MSL, Peak Temp. -- The Moisture Sensitivity Level rating according to the JEDEC industry standard classifications, and peak solder temperature.

(4) Multiple Top-Side Markings will be inside parentheses. Only one Top-Side Marking contained in parentheses and separated by a "~" will appear on a device. If a line is indented then it is a continuation of the previous line and the two combined represent the entire Top-Side Marking for that device.

Important Information and Disclaimer: The information provided on this page represents TI's knowledge and belief as of the date that it is provided. TI bases its knowledge and belief on information provided by third parties, and makes no representation or warranty as to the accuracy of such information. Efforts are underway to better integrate information from third parties. TI has taken and continues to take reasonable steps to provide representative and accurate information but may not have conducted destructive testing or chemical analysis on incoming materials and chemicals. TI and TI suppliers consider certain information to be proprietary, and thus CAS numbers and other limited information may not be available for release.

In no event shall TI's liability arising out of such information exceed the total purchase price of the TI part(s) at issue in this document sold by TI to Customer on an annual basis.

OTHER QUALIFIED VERSIONS OF SN5490A, SN5492A, SN54LS90, SN54LS93, SN7490A, SN7492A, SN74LS90, SN74LS93 :

- Catalog: SN7490A, SN7492A, SN74LS90, SN74LS93
- Military: SN5490A, SN5492A, SN54LS90, SN54LS93

NOTE: Qualified Version Definitions:

- Catalog - TI's standard catalog product
- Military - QML certified for Military and Defense Applications

TAPE AND REEL INFORMATION

REEL DIMENSIONS

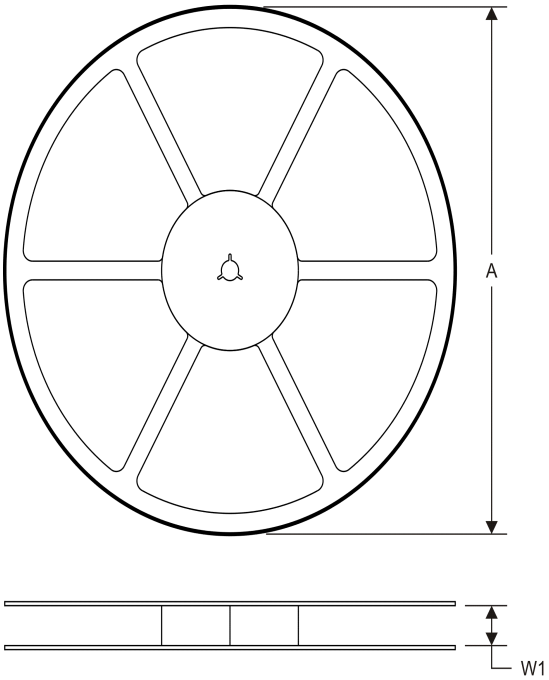

TAPE DIMENSIONS

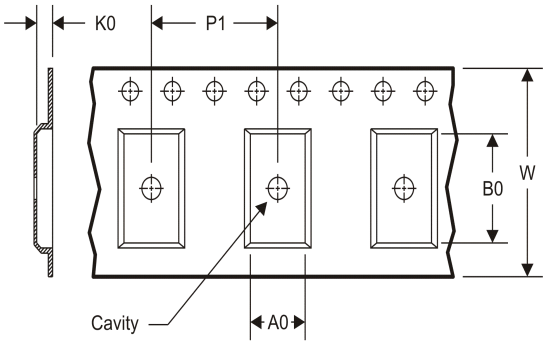

A0	Dimension designed to accommodate the component width
B0	Dimension designed to accommodate the component length
K0	Dimension designed to accommodate the component thickness
W	Overall width of the carrier tape
P1	Pitch between successive cavity centers

TAPE AND REEL INFORMATION

*All dimensions are nominal

Device	Package Type	Package Drawing	Pins	SPQ	Reel Diameter (mm)	Reel Width W1 (mm)	A0 (mm)	B0 (mm)	K0 (mm)	P1 (mm)	W (mm)	Pin1 Quadrant
SN74LS90DR	SOIC	D	14	2500	330.0	16.4	6.5	9.0	2.1	8.0	16.0	Q1
SN74LS92NSR	SO	NS	14	2000	330.0	16.4	8.2	10.5	2.5	12.0	16.0	Q1
SN74LS93NSR	SO	NS	14	2000	330.0	16.4	8.2	10.5	2.5	12.0	16.0	Q1

TAPE AND REEL BOX DIMENSIONS

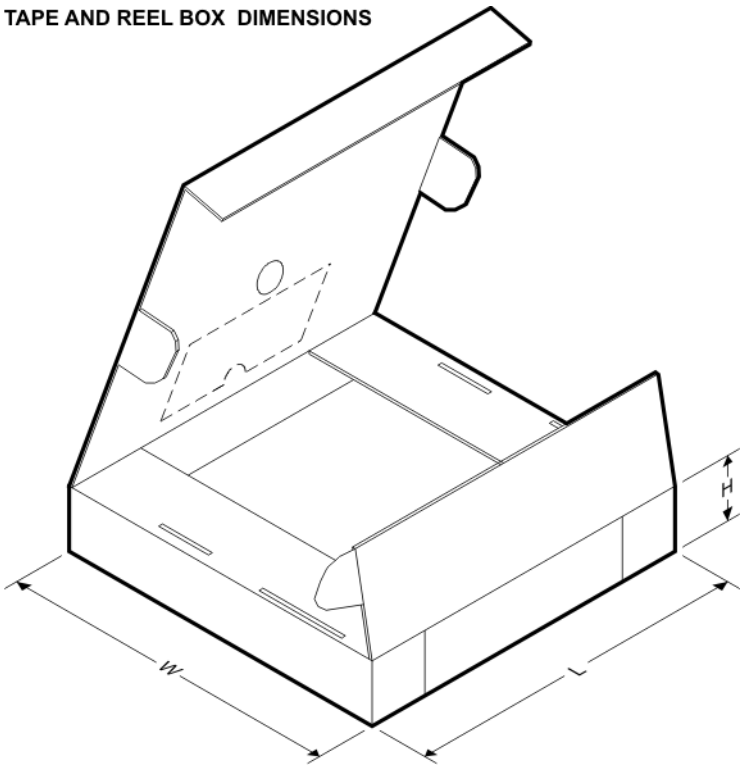

*All dimensions are nominal

Device	Package Type	Package Drawing	Pins	SPQ	Length (mm)	Width (mm)	Height (mm)
SN74LS90DR	SOIC	D	14	2500	367.0	367.0	38.0
SN74LS92NSR	SO	NS	14	2000	367.0	367.0	38.0
SN74LS93NSR	SO	NS	14	2000	367.0	367.0	38.0

J (R–GDIP–T**) CERAMIC DUAL IN–LINE PACKAGE

14 LEADS SHOWN

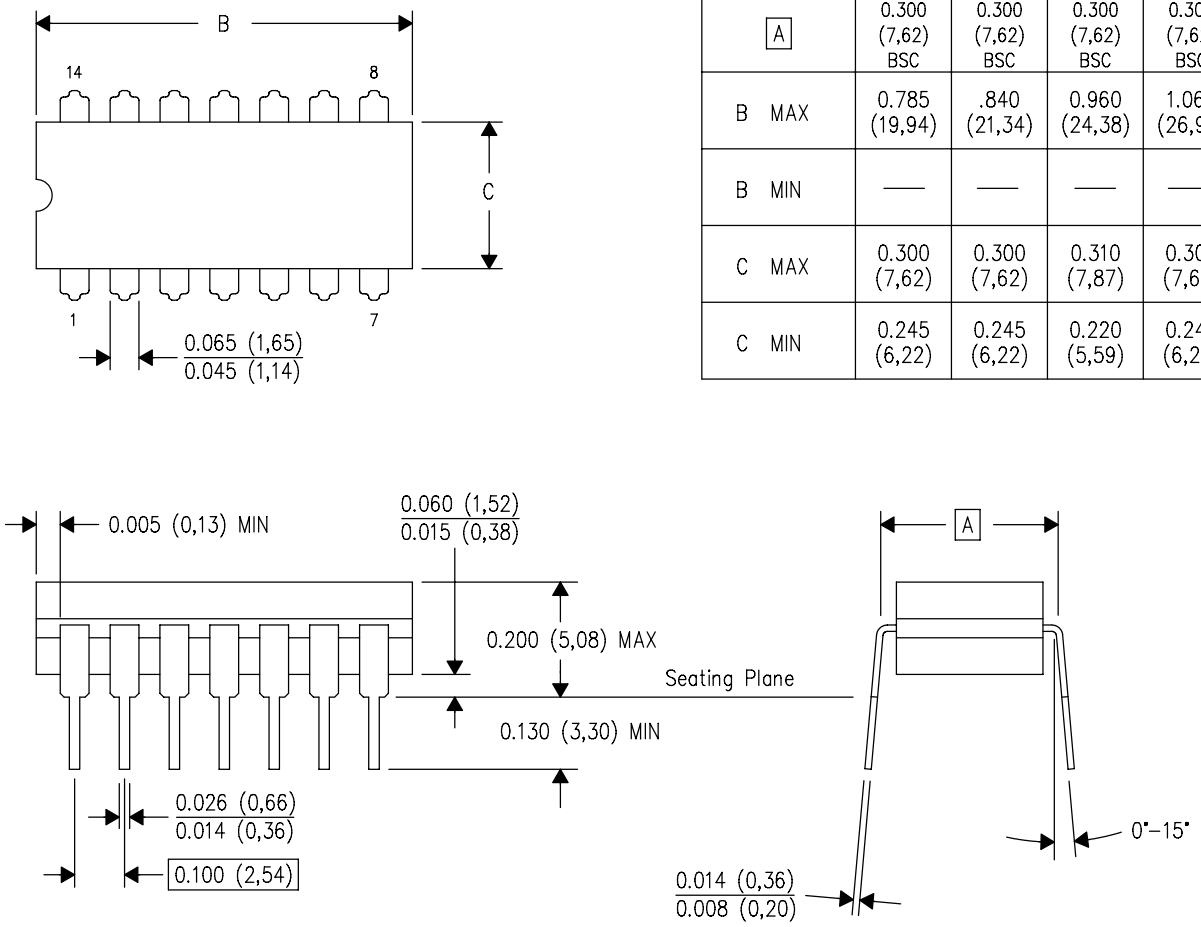

DIM \ PINS **	14	16	18	20
A	0.300 (7,62) BSC	0.300 (7,62) BSC	0.300 (7,62) BSC	0.300 (7,62) BSC
B MAX	0.785 (19,94)	.840 (21,34)	0.960 (24,38)	1.060 (26,92)
B MIN	—	—	—	—
C MAX	0.300 (7,62)	0.300 (7,62)	0.310 (7,87)	0.300 (7,62)
C MIN	0.245 (6,22)	0.245 (6,22)	0.220 (5,59)	0.245 (6,22)

4040083/F 03/03

NOTES:
- A. All linear dimensions are in inches (millimeters).
- B. This drawing is subject to change without notice.
- C. This package is hermetically sealed with a ceramic lid using glass frit.
- D. Index point is provided on cap for terminal identification only on press ceramic glass frit seal only.
- E. Falls within MIL STD 1835 GDIP1–T14, GDIP1–T16, GDIP1–T18 and GDIP1–T20.

W (R–GDFP–F14) CERAMIC DUAL FLATPACK

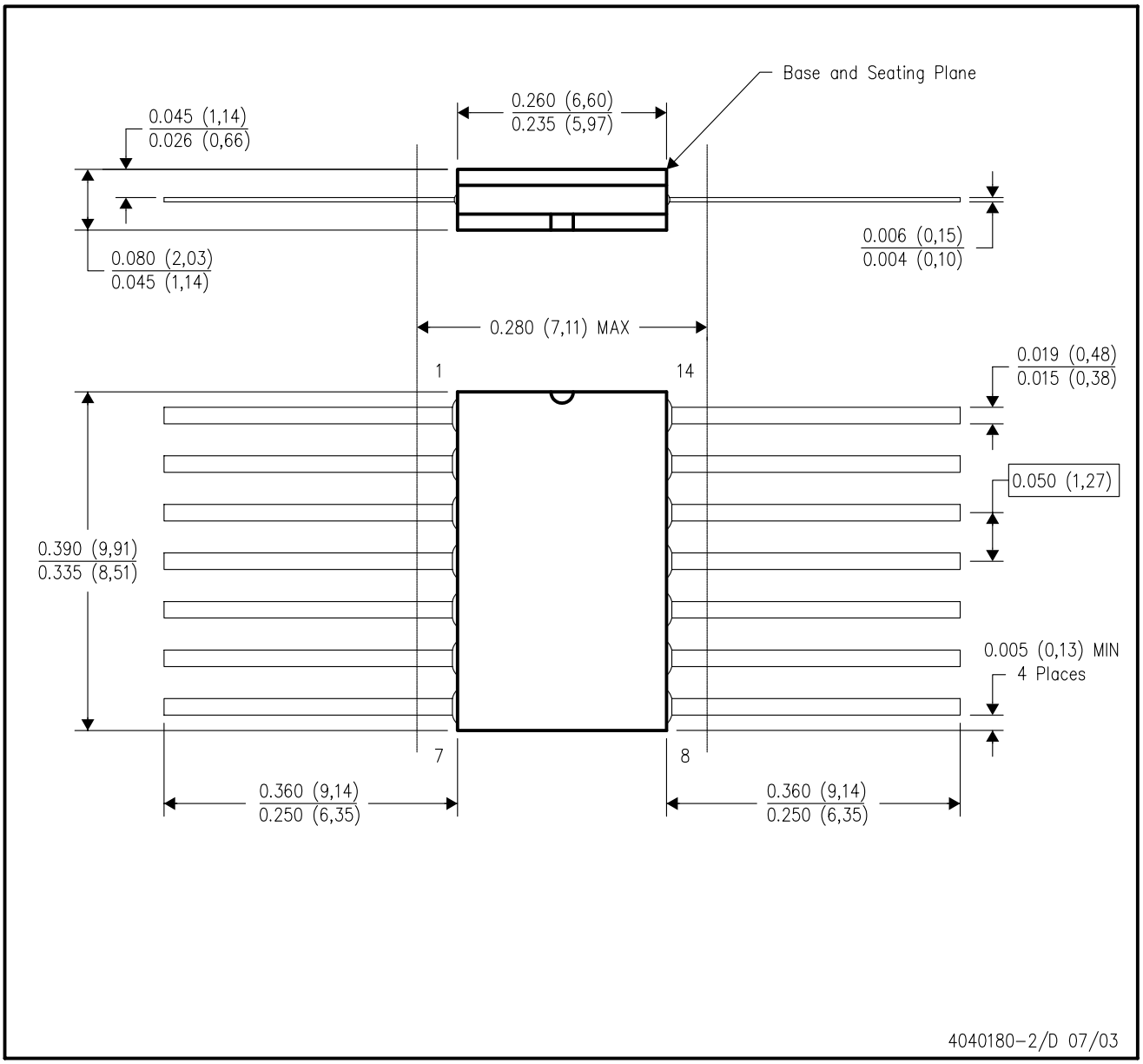

NOTES:
A. All linear dimensions are in inches (millimeters).
B. This drawing is subject to change without notice.
C. This package can be hermetically sealed with a ceramic lid using glass frit.
D. Index point is provided on cap for terminal identification only.
E. Falls within MIL STD 1835 GDFP1–F14 and JEDEC MO–092AB

N (R–PDIP–T**) PLASTIC DUAL–IN–LINE PACKAGE

16 PINS SHOWN

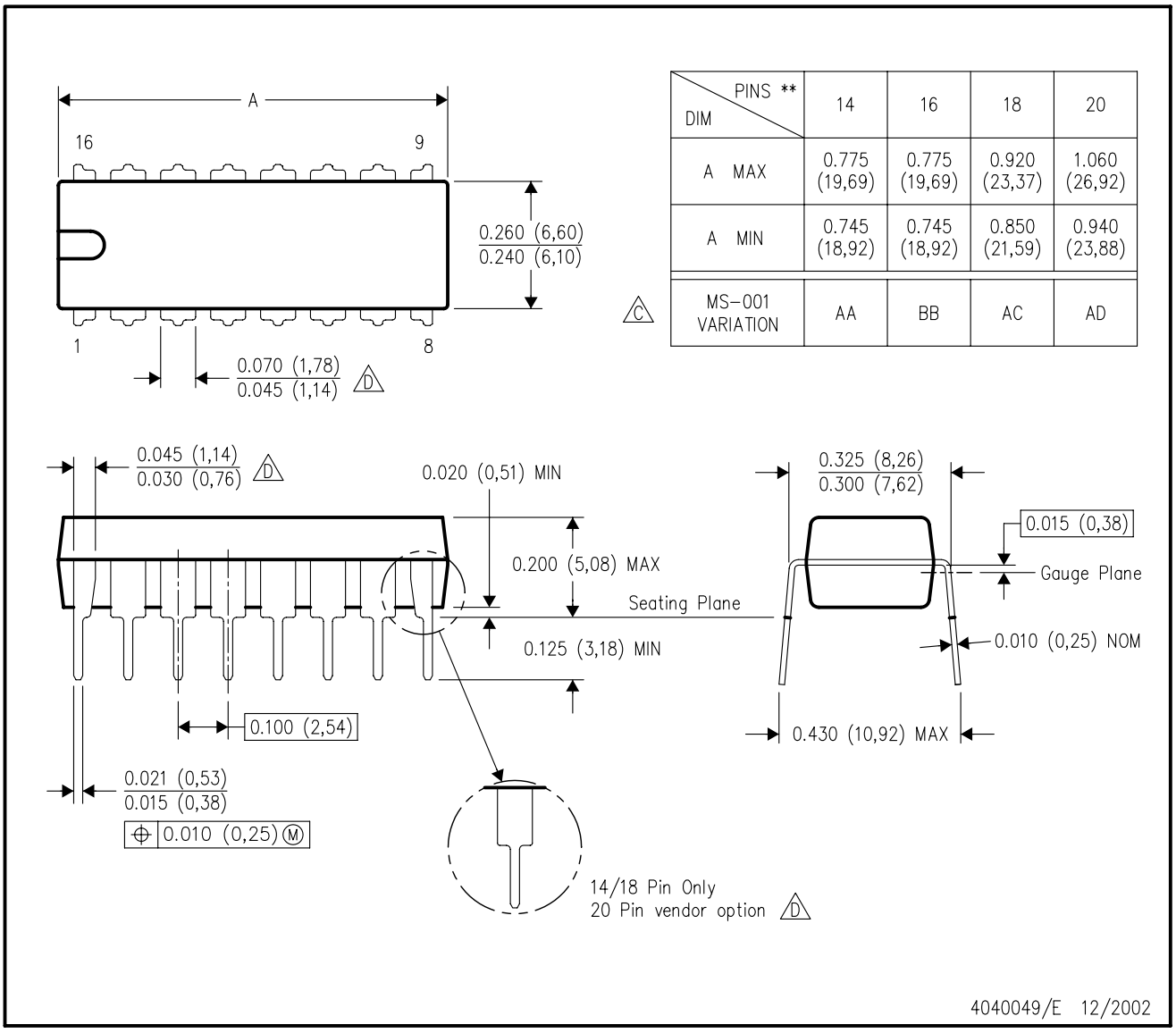

DIM \ PINS **	14	16	18	20
A MAX	0.775 (19,69)	0.775 (19,69)	0.920 (23,37)	1.060 (26,92)
A MIN	0.745 (18,92)	0.745 (18,92)	0.850 (21,59)	0.940 (23,88)
MS–001 VARIATION (C)	AA	BB	AC	AD

NOTES:
A. All linear dimensions are in inches (millimeters).
B. This drawing is subject to change without notice.
C. Falls within JEDEC MS–001, except 18 and 20 pin minimum body length (Dim A).
D. The 20 pin end lead shoulder width is a vendor option, either half or full width.

D (R–PDSO–G14) PLASTIC SMALL OUTLINE

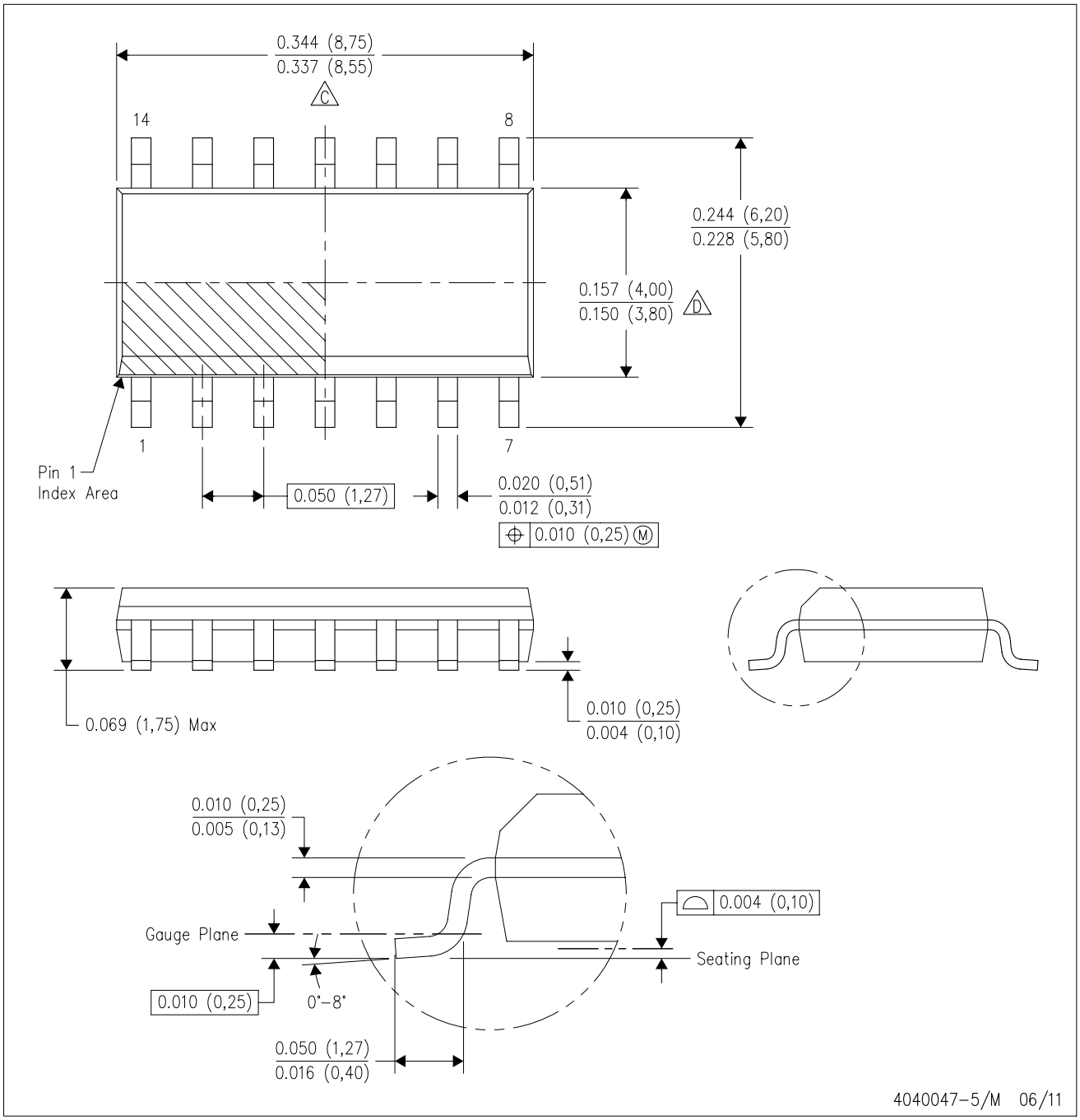

NOTES:
A. All linear dimensions are in inches (millimeters).
B. This drawing is subject to change without notice.
C. Body length does not include mold flash, protrusions, or gate burrs. Mold flash, protrusions, or gate burrs shall not exceed 0.006 (0,15) each side.
D. Body width does not include interlead flash. Interlead flash shall not exceed 0.017 (0,43) each side.
E. Reference JEDEC MS–012 variation AB.

D (R–PDSO–G14) PLASTIC SMALL OUTLINE

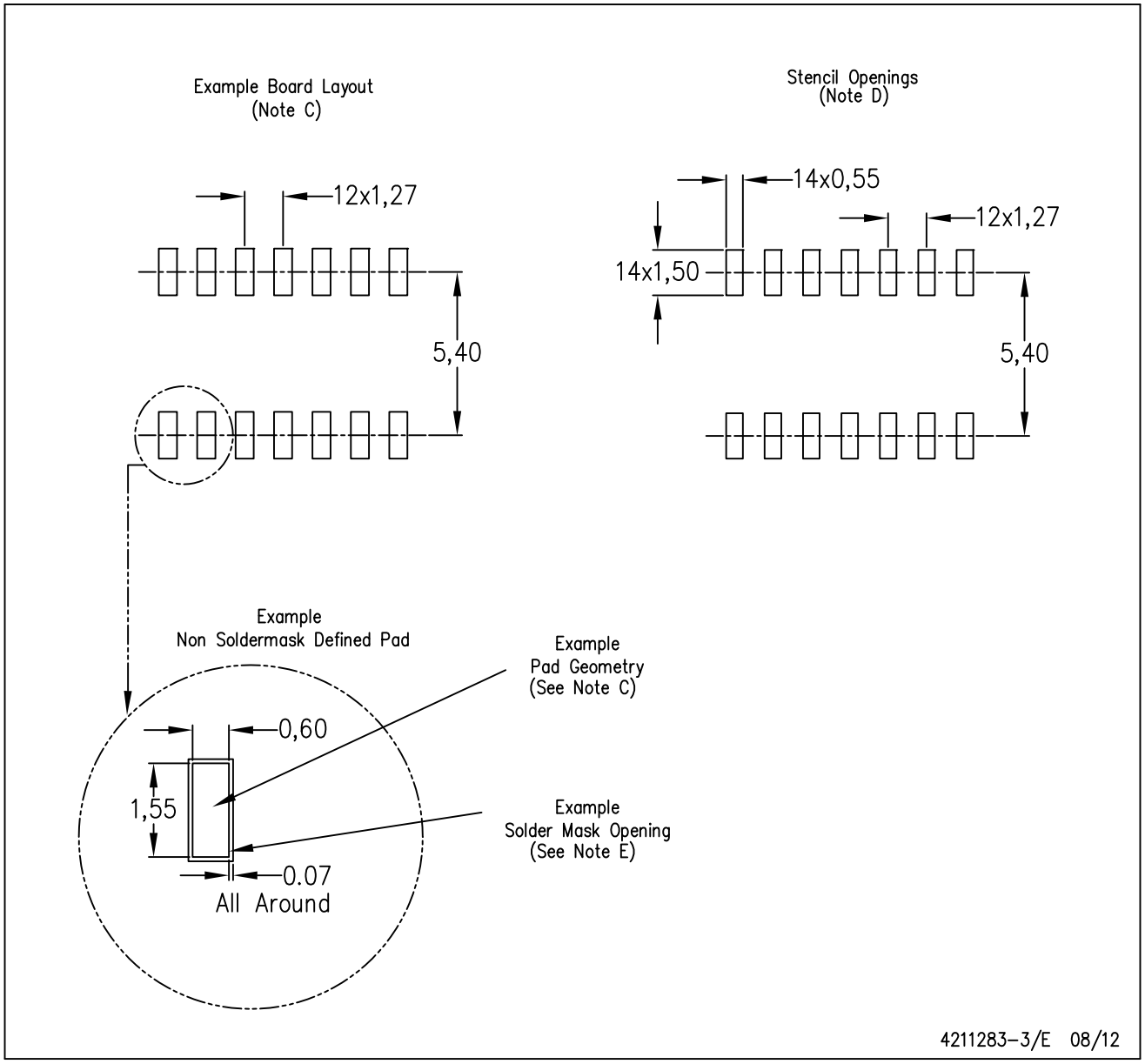

NOTES:
A. All linear dimensions are in millimeters.
B. This drawing is subject to change without notice.
C. Publication IPC–7351 is recommended for alternate designs.
D. Laser cutting apertures with trapezoidal walls and also rounding corners will offer better paste release. Customers should contact their board assembly site for stencil design recommendations. Refer to IPC–7525 for other stencil recommendations.
E. Customers should contact their board fabrication site for solder mask tolerances between and around signal pads.

MECHANICAL DATA

NS (R-PDSO-G)** **PLASTIC SMALL-OUTLINE PACKAGE**

14-PINS SHOWN

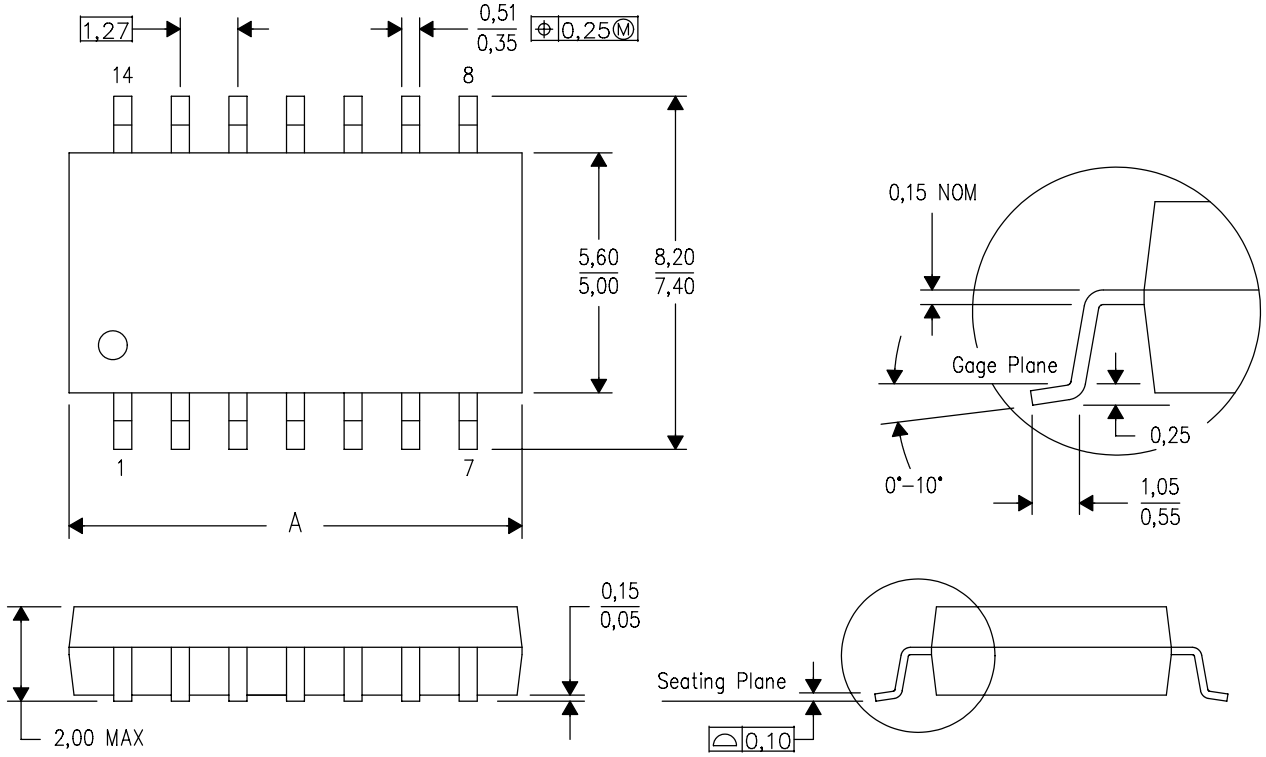

DIM \ PINS **	14	16	20	24
A MAX	10,50	10,50	12,90	15,30
A MIN	9,90	9,90	12,30	14,70

4040062/C 03/03

NOTES:
A. All linear dimensions are in millimeters.
B. This drawing is subject to change without notice.
C. Body dimensions do not include mold flash or protrusion, not to exceed 0,15.

IMPORTANT NOTICE

Texas Instruments Incorporated and its subsidiaries (TI) reserve the right to make corrections, enhancements, improvements and other changes to its semiconductor products and services per JESD46, latest issue, and to discontinue any product or service per JESD48, latest issue. Buyers should obtain the latest relevant information before placing orders and should verify that such information is current and complete. All semiconductor products (also referred to herein as “components”) are sold subject to TI’s terms and conditions of sale supplied at the time of order acknowledgment.

TI warrants performance of its components to the specifications applicable at the time of sale, in accordance with the warranty in TI’s terms and conditions of sale of semiconductor products. Testing and other quality control techniques are used to the extent TI deems necessary to support this warranty. Except where mandated by applicable law, testing of all parameters of each component is not necessarily performed.

TI assumes no liability for applications assistance or the design of Buyers’ products. Buyers are responsible for their products and applications using TI components. To minimize the risks associated with Buyers’ products and applications, Buyers should provide adequate design and operating safeguards.

TI does not warrant or represent that any license, either express or implied, is granted under any patent right, copyright, mask work right, or other intellectual property right relating to any combination, machine, or process in which TI components or services are used. Information published by TI regarding third-party products or services does not constitute a license to use such products or services or a warranty or endorsement thereof. Use of such information may require a license from a third party under the patents or other intellectual property of the third party, or a license from TI under the patents or other intellectual property of TI.

Reproduction of significant portions of TI information in TI data books or data sheets is permissible only if reproduction is without alteration and is accompanied by all associated warranties, conditions, limitations, and notices. TI is not responsible or liable for such altered documentation. Information of third parties may be subject to additional restrictions.

Resale of TI components or services with statements different from or beyond the parameters stated by TI for that component or service voids all express and any implied warranties for the associated TI component or service and is an unfair and deceptive business practice. TI is not responsible or liable for any such statements.

Buyer acknowledges and agrees that it is solely responsible for compliance with all legal, regulatory and safety-related requirements concerning its products, and any use of TI components in its applications, notwithstanding any applications-related information or support that may be provided by TI. Buyer represents and agrees that it has all the necessary expertise to create and implement safeguards which anticipate dangerous consequences of failures, monitor failures and their consequences, lessen the likelihood of failures that might cause harm and take appropriate remedial actions. Buyer will fully indemnify TI and its representatives against any damages arising out of the use of any TI components in safety-critical applications.

In some cases, TI components may be promoted specifically to facilitate safety-related applications. With such components, TI’s goal is to help enable customers to design and create their own end-product solutions that meet applicable functional safety standards and requirements. Nonetheless, such components are subject to these terms.

No TI components are authorized for use in FDA Class III (or similar life-critical medical equipment) unless authorized officers of the parties have executed a special agreement specifically governing such use.

Only those TI components which TI has specifically designated as military grade or “enhanced plastic” are designed and intended for use in military/aerospace applications or environments. Buyer acknowledges and agrees that any military or aerospace use of TI components which have ***not*** been so designated is solely at the Buyer's risk, and that Buyer is solely responsible for compliance with all legal and regulatory requirements in connection with such use.

TI has specifically designated certain components as meeting ISO/TS16949 requirements, mainly for automotive use. In any case of use of non-designated products, TI will not be responsible for any failure to meet ISO/TS16949.

Products		**Applications**	
Audio	www.ti.com/audio	Automotive and Transportation	www.ti.com/automotive
Amplifiers	amplifier.ti.com	Communications and Telecom	www.ti.com/communications
Data Converters	dataconverter.ti.com	Computers and Peripherals	www.ti.com/computers
DLP® Products	www.dlp.com	Consumer Electronics	www.ti.com/consumer-apps
DSP	dsp.ti.com	Energy and Lighting	www.ti.com/energy
Clocks and Timers	www.ti.com/clocks	Industrial	www.ti.com/industrial
Interface	interface.ti.com	Medical	www.ti.com/medical
Logic	logic.ti.com	Security	www.ti.com/security
Power Mgmt	power.ti.com	Space, Avionics and Defense	www.ti.com/space-avionics-defense
Microcontrollers	microcontroller.ti.com	Video and Imaging	www.ti.com/video
RFID	www.ti-rfid.com		
OMAP Applications Processors	www.ti.com/omap	**TI E2E Community**	e2e.ti.com
Wireless Connectivity	www.ti.com/wirelessconnectivity		

Mailing Address: Texas Instruments, Post Office Box 655303, Dallas, Texas 75265
Copyright © 2013, Texas Instruments Incorporated

Общество с ограниченной ответственностью «МосЧип» ИНН 7719860671 / КПП 771901001
Адрес: 105318, г.Москва, ул.Щербаковская д.3, офис 1107

Данный компонент на территории Российской Федерации

Вы можете приобрести в компании MosChip.

Для оперативного оформления запроса Вам необходимо перейти по данной ссылке:

http://moschip.ru/get-element

Вы можете разместить у нас заказ для любого Вашего проекта, будь то серийное производство или разработка единичного прибора.

В нашем ассортименте представлены ведущие мировые производители активных и пассивных электронных компонентов.

Нашей специализацией является поставка электронной компонентной базы двойного назначения, продукции таких производителей как XILINX, Intel (ex.ALTERA), Vicor, Microchip, Texas Instruments, Analog Devices, Mini-Circuits, Amphenol, Glenair.

Сотрудничество с глобальными дистрибьюторами электронных компонентов, предоставляет возможность заказывать и получать с международных складов практически любой перечень компонентов в оптимальные для Вас сроки.

На всех этапах разработки и производства наши партнеры могут получить квалифицированную поддержку опытных инженеров.

Система менеджмента качества компании отвечает требованиям в соответствии с ГОСТ Р ИСО 9001, ГОСТ РВ 0015-002 и ЭС РД 009

Офис по работе с юридическими лицами:

105318, г.Москва, ул.Щербаковская д.3, офис 1107, 1118, ДЦ «Щербаковский»

Телефон: +7 495 668-12-70 (многоканальный)

Факс: +7 495 668-12-70 (доб.304)

E-mail: info@moschip.ru

Skype отдела продаж:
moschip.ru
moschip.ru_4
moschip.ru_6
moschip.ru_9