THIS DRAWING IS UNPUBLISHED. RELEASED FOR PUBLICATION 20
© COPYRIGHT 20 BY - ALL RIGHTS RESERVED.

REVISIONS

| P | LTR | DESCRIPTION | DATE | DWN | APVD |
|---|---|---|---|---|---|
| | BA3 | REVISED PER ECO-15-004852 | 27MAR2015 | DLD | DLD |

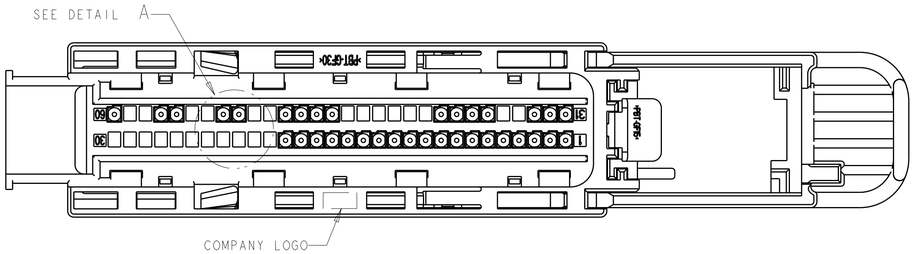


ALTERNATE CONSTRUCTION

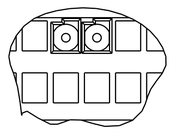

DETAIL A
SCALE 4:1

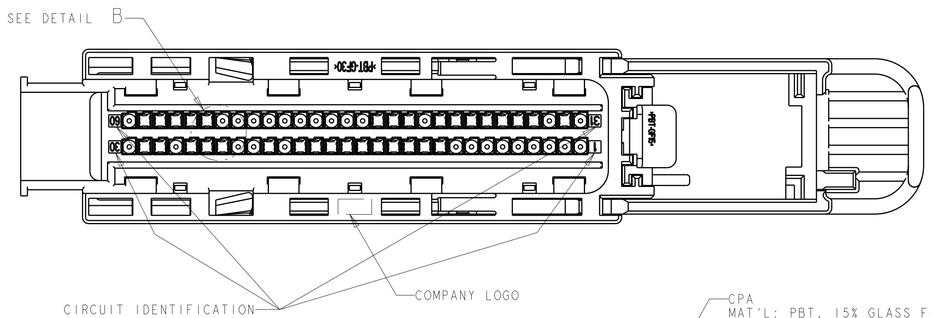


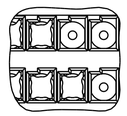

DETAIL B
SCALE 4:1

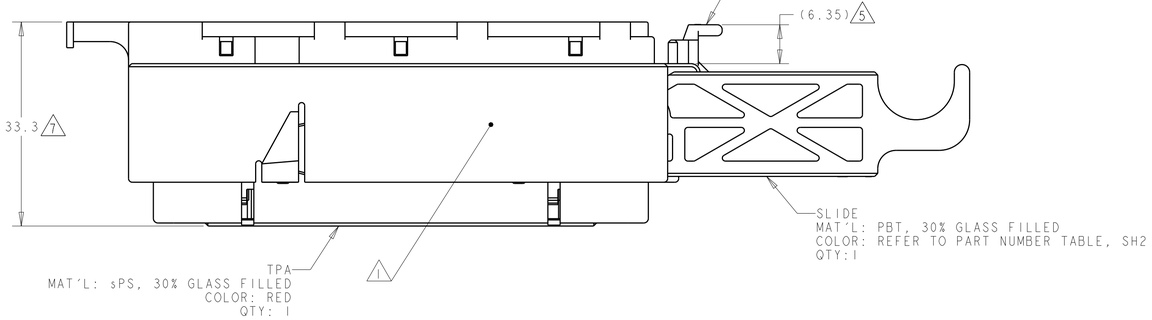


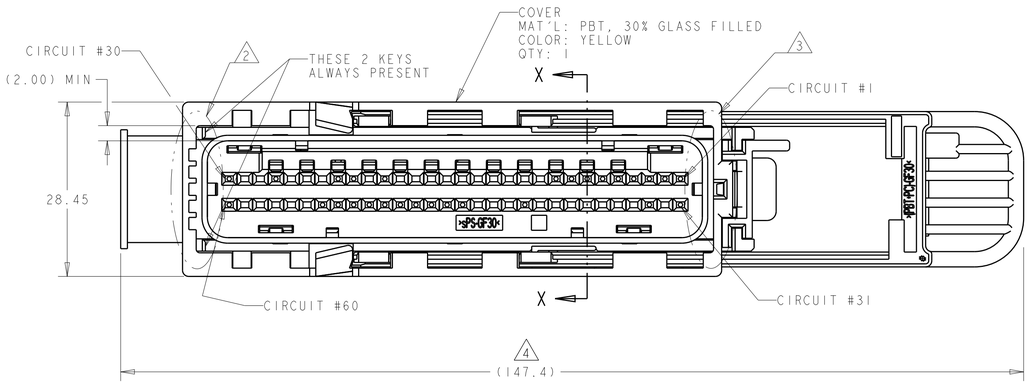


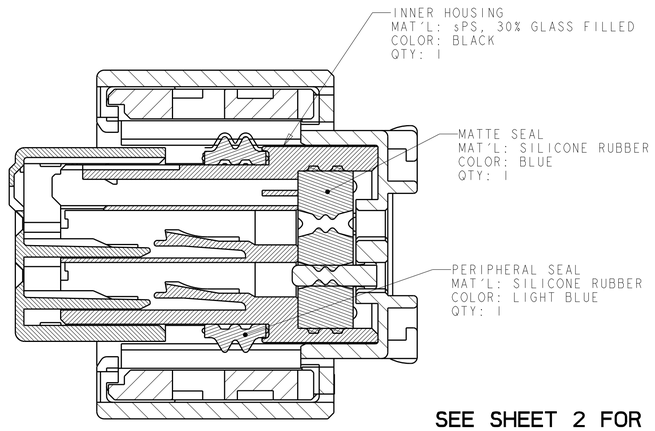


SECTION X-X
SCALE 4:1

1. TE CONNECTIVITY (TE) PART NUMBER AND JULIAN DATE CODE MARKED ON THIS SIDE.
2. SEE KEYING ARRANGEMENT TABLE FOR KEYWAY LOCATIONS, SEE SHEET 6.
3. SEE KEYING ARRANGEMENT TABLE FOR KEY LOCATIONS, SEE SHEET 6.
4. SLIDE SHOWN IN UNLOCKED POSITION.
5. CPA SHOWN IN UNLOCKED POSITION.
6. NOTE DELETED.
7. TPA SHOWN IN UNLOCKED POSITION.
8. REFER TO DRAWING C-638623 AND/OR C-1488143 FOR MATING CONNECTOR INFORMATION.
9. NOT FOR PRODUCTION USE.
10. MISCELLANEOUS COMPONENT ENGAGE/DISENGAGE FORCE, SAE/USCAR-2, SECTION 5.4.4.4, G.M. APPROVED DEVIATION:
    TPA (PRE-SET TO FULL) FORCES TO BE 15 TO 55 NEWTONS.
11. MISCELLANEOUS COMPONENT ENGAGE/DISENGAGE FORCE, SAE/USCAR-2, SECTION 5.4.4.4, G.M. APPROVED DEVIATION:
    CPA (PRE-SET TO FULL) FORCES TO BE 7 TO 30 NEWTONS.
12. POLARIZATION FEATURE EFFECTIVENESS, SAE/USCAR-2, SECTION 4.3.4, G.M. APPROVED DEVIATION:
    DURING MISMATING FORCE TESTING CERTAIN CONNECTOR/HEADER COMBINATIONS MAY ALLOW ELECTRICAL CONTACT OF UP TO 26 PINS BELOW THE REQUIRED 220 NEWTON FORCE.
13. CONNECTOR-CONNECTOR MATING/UNMATING FORCE, SAE/USCAR-2, SECTION 5.4.2.4, G.M. APPROVED DEVIATION:
    MATING FORCE IS ACCEPTABLE FOR THE CONNECTOR/HEADER SYSTEM UP TO 50 TERMINALS AT ≦ 75 NEWTONS.
14. APPLICABLE TE GET FEMALE TERMINALS:
    FOR 0.22/0.35 WIRE SECTION, TERMINAL PART NUMBER 1393364-2
    FOR 0.50/0.0.75 WIRE SECTION, TERMINAL PART NUMBER 1393365-2
15. REFER TO POGO PIN FOR GET SOCKET TERMINAL ON TE DRAWING #114-18411 FOR CONTINUITY TESTING.
16. PRELIMINARY NOT RELEASED FOR PRODUCTION.

**SEE SHEET 2 FOR HEADER INTERFACE SPECIFICATION,**
**SHEET 6 FOR KEYING ARRANGEMENTS,**
**AND SHEETS 7, 8 & 9 FOR CIRCUIT ARRANGEMENTS**

SEE SHEET 3
PART NUMBER

THIS DRAWING IS A CONTROLLED DOCUMENT.

DIMENSIONS: mm
TOLERANCES UNLESS OTHERWISE SPECIFIED:
0 PLC ±-
1 PLC ±0.5
2 PLC ±0.20
3 PLC ±-
4 PLC ±-
ANGLES ±-

MATERIAL - SEE CALLOUT
FINISH - SEE CALLOUT

DWN J.R.SHUEY 31MAR2000
CHK V.KANE 31MAR2000
APVD J.M.MYER 31MAR2000
PRODUCT SPEC -
APPLICATION SPEC 114-13060
WEIGHT -

TE Connectivity

NAME ASSEMBLY, FEMALE, 60 WAY GET SDM CONNECTOR (SHUNTLESS VERSION)

SIZE A1 | CAGE CODE 00779 | DRAWING NO C-638595 | RESTRICTED TO -

CUSTOMER DRAWING | SCALE 2:1 | SHEET 1 OF 10 | REV BA3

4805 (3/13)

THIS DRAWING IS UNPUBLISHED. RELEASED FOR PUBLICATION 20
© COPYRIGHT 20 BY - ALL RIGHTS RESERVED.

# APPLICABLE HEADER INTERFACE SPECIFICATION

SHOWN WITH KEYING OPTION K1
SCALE 3:1

| REVISIONS | | | | | |
|---|---|---|---|---|---|
| P | LTR | DESCRIPTION | DATE | DWN | APVD |
| | - | SEE SHEET 1 | - | - | - |

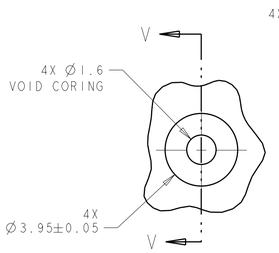


DETAIL W
SCALE 6:1

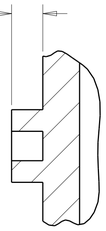


SECTION V-V

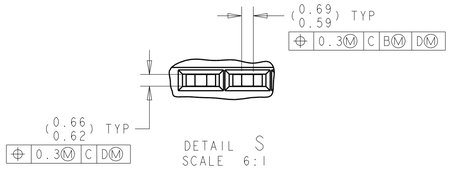


DETAIL S
SCALE 6:1

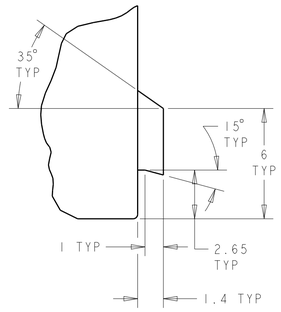


DETAIL R
SCALE 6:1

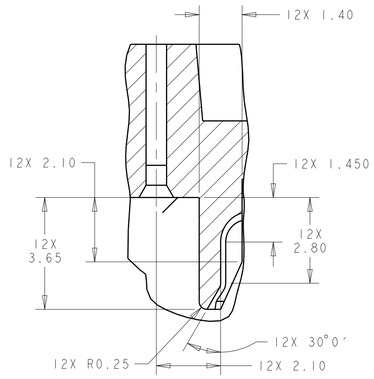


SECTION S-S

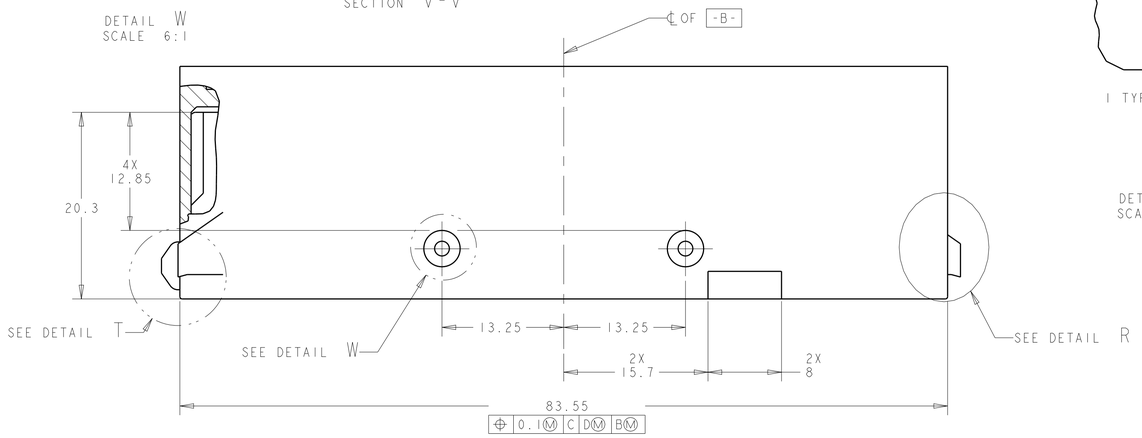


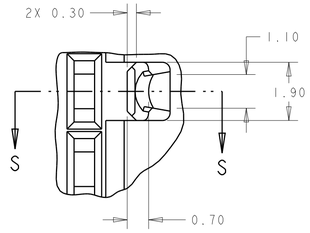


DETAIL U
ROTATED 90° CLOCKWISE
SCALE 10:1

NOTE(S): UNLESS OTHERWISE SPECIFIED

1. PART MUST CONFORM TO THE LATEST LEVEL OF USCAR DATED 951010.
2. ALL PLASTIC PARTS MUST HAVE MATERIAL IDENTIFICATION SYMBOLS CLEARLY MARKED, WHEREVER PACKAGE SIZE PERMITS.
3. GENERAL TOLERANCES: ±0.2 ALL ONE PLACE DIMENSIONS, ±0.1 ALL TWO PLACE DIMENSIONS, ±2° ALL ANGULAR PLACE DIMENSIONS
4. ALL RADIUS ±0.5.
5. PIN PLATING DETAILS . . .
6. (SEALED INTERFACES ONLY) SEALING SURFACE MUST BE SMOOTH AND FREE OF PARTING LINES.
7. PARTS ARE TO BE FREE OF SCRATCHES, DISCOLORATION, SALT RESIDUE OR OTHER IMPERFECTIONS THAT MAY AFFECT FUNCTION OR FIT OF PART.
8. DRAFT ANGLE PERMISSIBLE ONLY WITHIN PRINT TOLERANCE.

9. SEALING SURFACE, NO WITNESS LINES OR DAMAGE PERMITTED.
10. VENT HOLE SIZE AND LOCATION OPTIONAL.
11. THIS AREA TO REMAIN CLEAR FOR HARNESS ASSEMBLY.
12. HOUSING MATERIAL SELECTION BASED ON PERFORMANCE REQUIRED FOR END APPLICATION AND SOLDERING PROCESS. POLYESTER (PBT) - 30% GLASS TESTED TO USCAR2, REV 3, CLASS 2, MAX. AMBIENT 100 DEGREE C.
13. CIRCUIT NUMBERS 1.0 HIGH CHARACTERS RAISED 0.05 - 0.1 IN A 0.10 TO 0.15 RECESSED AREA.

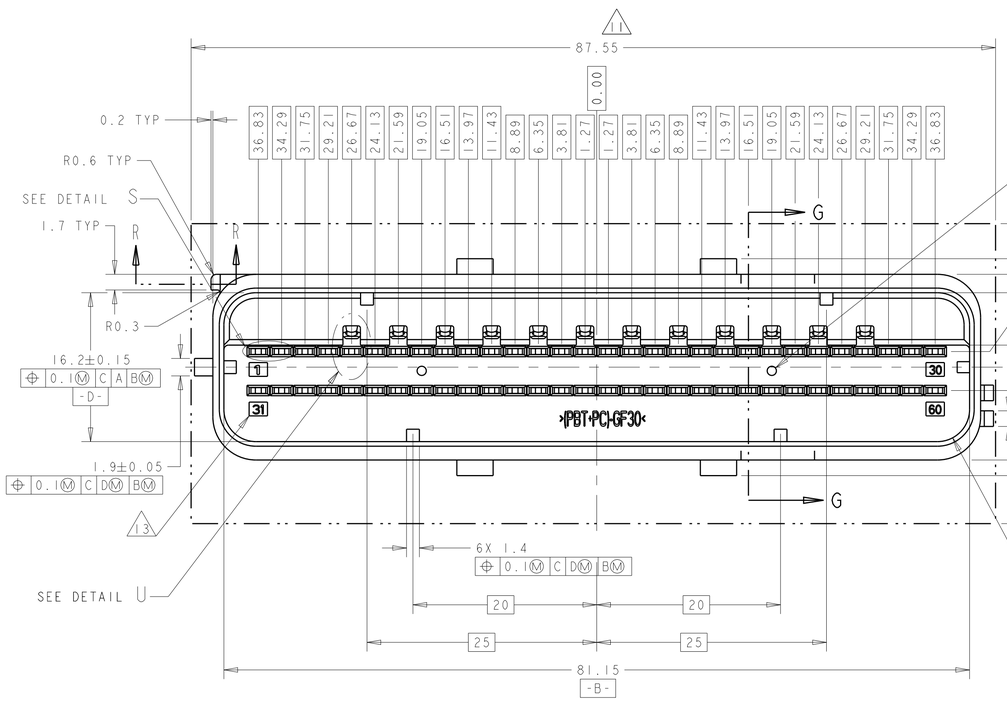


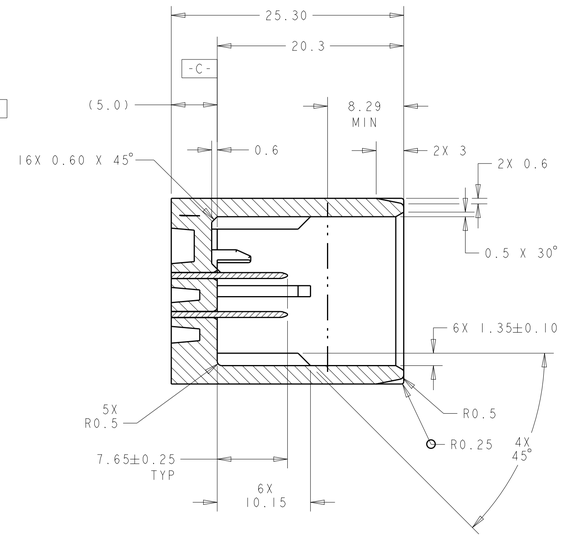


SECTION G-G

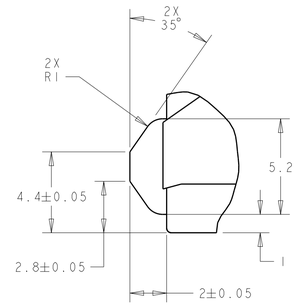


DETAIL T
SCALE 6:1

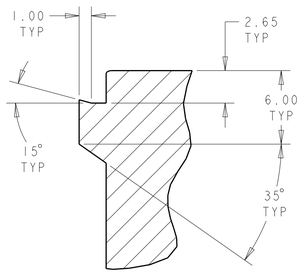


SECTION R-R
SCALE 4:1

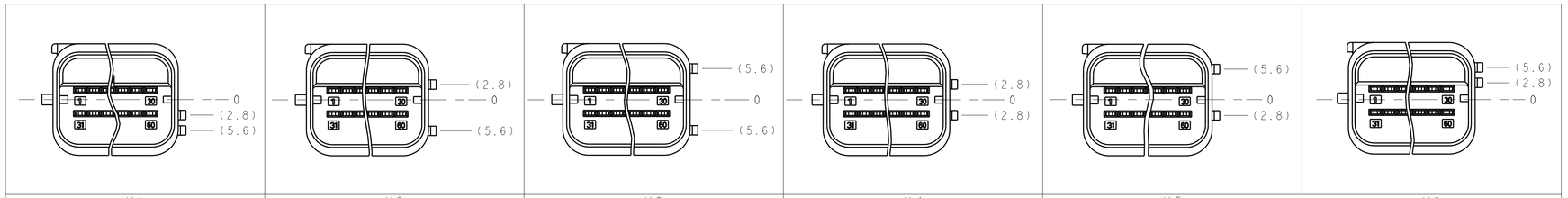


KEYING ARRANGEMENTS FOR HEADER INTERFACE

| | | | |
|---|---|---|---|
| THIS DRAWING IS A CONTROLLED DOCUMENT. | DWN J.R.SHUEY 31MAR2000 | TE Connectivity | |
| DIMENSIONS: mm | CHK V.KANE 31MAR2000 | | |
| TOLERANCES UNLESS OTHERWISE SPECIFIED: 0 PLC ±, 1 PLC ±0.5, 2 PLC ±0.20, 3 PLC ±, 4 PLC ±, ANGLES ± | APVD J.M.MYER 31MAR2000 | NAME ASSEMBLY, FEMALE, 60 WAY GET SDM CONNECTOR (SHUNTLESS VERSION) | |
| | PRODUCT SPEC - | | |
| | APPLICATION SPEC 114-13060 | SIZE A1 / CAGE CODE 00779 / DRAWING NO C-638595 | RESTRICTED TO - |
| MATERIAL - SEE CALLOUT | FINISH - SEE CALLOUT | WEIGHT - | |
| | | CUSTOMER DRAWING | SCALE 2:1 / SHEET 2 OF 10 / REV DA3 |

4805 (3/13)

THIS DRAWING IS UNPUBLISHED. RELEASED FOR PUBLICATION 20
© COPYRIGHT 20 BY - ALL RIGHTS RESERVED.

REVISIONS

| P | LTR | DESCRIPTION | DATE | DWN | APVD |
|---|---|---|---|---|---|
| | - | SEE SHEET 1 | - | - | - |

| GM PART NUMBER | SLIDE COLOR | CIRCUIT ARRANGEMENT (SEE TABLE ON SH 5 & 6) | KEYING ARRANGEMENT (SEE TABLE ON SHEET 5) | PART NUMBER |
|---|---|---|---|---|
| 19206486 | BLACK | C120 | K1 | 7-184464-2 |
| 19206484 | BLACK | C119 | K1 | 7-184464-0 |
| --- | BLACK | C118 | K6 | 6-184464-9 |
| --- | BLACK | C116 | K2 | 6-184464-7 |
| --- | BLACK | C103 | K1 | 6-184464-6 |
| --- | BLACK | C114 | K6 | 6-184464-5 |
| --- | BLACK | C113 | K1 | 6-184464-4 |
| --- | BLACK | C112 | K1 | 6-184464-3 |
| --- | BLACK | C111 | K3 | 6-184464-2 |
| --- | BLACK | C110 | K6 | 6-184464-1 |
| --- | BLACK | C106 | K5 | 6-184464-0 |
| --- | BLACK | C105 | K4 | 5-184464-9 |
| --- | BLACK | C106 | K3 | 5-184464-8 |

| SLIDE COLOR | CIRCUIT ARRANGEMENT (SEE TABLE ON SH 5 & 6) | KEYING ARRANGEMENT (SEE TABLE ON SHEET 5) | PART NUMBER |
|---|---|---|---|
| BLACK | C101 | K3 | 5-184464-3 |
| BLACK | C99 | K6 | 5-184464-1 |
| BLACK | C98 | K1 | 5-184464-0 |
| BLACK | C97 | K3 | 4-184464-9 |
| BLACK | C96 | K6 | 4-184464-8 |
| BLACK | C95 | K1 | 4-184464-7 |
| BLACK | C94 | K1 | 4-184464-6 |
| BLACK | C93 | K1 | 4-184464-5 |
| BLACK | C92 | K6 | 4-184464-4 |
| GREEN | C91 | K6 | 4-184464-3 |
| BLUE | C88 | K3 | 3-184464-8 |
| YELLOW | C86 | K3 | 3-184464-6 |
| BROWN | C85 | K3 | 3-184464-5 |
| GREY | C22 | K7 | 3-184464-1 |
| GREEN | C66 | K3 | 3-184464-0 |
| GREY | C65 | K3 | 2-184464-9 |
| BLACK | C79 | K6 | 2-184464-6 |
| BLACK | C78 | K6 | 2-184464-5 |
| BLACK | C77 | K6 | 2-184464-4 |
| BLACK | C53 | K2 | 2-184464-3 |
| BLACK | C76 | K6 | 2-184464-2 |
| BLACK | C72 | K1 | 2-184464-1 |
| BLACK | C70 | K1 | 1-184464-9 |
| BLACK | C68 | K1 | 1-184464-7 |
| BLACK | C67 | K1 | 1-184464-6 |
| BROWN | C48 | K4 | 184464-9 |
| BLACK | C58 | K6 | 184464-5 |
| BLACK | C57 | K6 | 184464-4 |

| SLIDE COLOR | CIRCUIT ARRANGEMENT (SEE TABLE ON SH 5 & 6) | KEYING ARRANGEMENT (SEE TABLE ON SHEET 5) | PART NUMBER |
|---|---|---|---|
| 9 BLACK | C3 | K99 | 9-638595-7 |
| 9 BLACK | C3 | K99 | 8-638595-5 |
| BLACK | C48 | K4 | 6-638595-4 |
| YELLOW | C30 | K4 | 6-638595-3 |
| YELLOW | C47 | K4 | 6-638595-2 |
| GREEN | C19 | K5 | 6-638595-0 |
| GREY | C46 | K3 | 5-638595-9 |
| GREEN | C45 | K3 | 5-638595-8 |

| SLIDE COLOR | CIRCUIT ARRANGEMENT (SEE TABLE ON SH 5 & 6) | KEYING ARRANGEMENT (SEE TABLE ON SHEET 5) | PART NUMBER |
|---|---|---|---|
| BLUE | C22 | K6 | 5-638595-3 |
| GREEN | C42 | K6 | 5-638595-1 |
| BLUE | C41 | K6 | 5-638595-0 |
| BLUE | C39 | K6 | 4-638595-8 |
| BLACK | C38 | K6 | 4-638595-7 |
| BLACK | C21 | K3 | 4-638595-6 |
| BLACK | C16 | K4 | 4-638595-5 |
| BLACK | C37 | K2 | 4-638595-4 |
| BROWN | C31 | K1 | 3-638595-8 |
| BROWN | C29 | K1 | 3-638595-5 |
| GREY | C29 | K5 | 3-638595-4 |
| YELLOW | C28 | K2 | 3-638595-3 |
| BLUE | C22 | K3 | 2-638595-9 |
| BLUE | C26 | K3 | 2-638595-8 |
| BLACK | C11 | K1 | 2-638595-7 |
| BROWN | C21 | K3 | 2-638595-4 |
| ORANGE | C22 | K3 | 2-638595-2 |
| BLACK | C20 | K1 | 2-638595-0 |
| BLACK | C9 | K1 | 1-638595-9 |
| BLACK | C18 | K2 | 1-638595-7 |
| GREEN | C17 | K5 | 1-638595-6 |
| BLUE | C16 | K4 | 1-638595-5 |
| BLACK | C4 | K1 | 638595-1 |

THIS DRAWING IS A CONTROLLED DOCUMENT.

DIMENSIONS: mm

TOLERANCES UNLESS OTHERWISE SPECIFIED:
0 PLC ±-
1 PLC ±0.5
2 PLC ±0.20
3 PLC ±-
4 PLC ±-
ANGLES ±-

MATERIAL - SEE CALLOUT
FINISH - SEE CALLOUT

DWN J.R.SHUEY 31MAR2000
CHK V.KANE 31MAR2000
APVD J.M.MYER 31MAR2000
PRODUCT SPEC -
APPLICATION SPEC 114-13060
WEIGHT -

TE Connectivity

NAME ASSEMBLY, FEMALE, 60 WAY GET SDM CONNECTOR (SHUNTLESS VERSION)

SIZE A1 | CAGE CODE 00779 | DRAWING NO C-638595 | RESTRICTED TO -

CUSTOMER DRAWING | SCALE 2:1 | SHEET 3 OF 10 | REV DA3

4805 (3/13)

THIS DRAWING IS UNPUBLISHED. RELEASED FOR PUBLICATION 20
© COPYRIGHT 20 BY - ALL RIGHTS RESERVED.

REVISIONS

| P | LTR | DESCRIPTION | DATE | DWN | APVD |
|---|---|---|---|---|---|
| | - | SEE SHEET 1 | - | - | - |

| | | | | |
|---|---|---|---|---|
| 13577852 | BLACK | C134 | K5 | 3-1924558-7 |
| | | | | |
| | | | | |
| | | | | |
| | | | | |
| 13502172 | BLACK | C130 | K3 | 2-1924558-2 |
| 13502171 | BLACK | C120 | K3 | 2-1924558-1 |
| 13502170 | BLACK | C42 | K6 | 2-1924558-0 |
| 13502169 | BLACK | C91 | K6 | 1-1924558-9 |
| 19206496 | BLACK | C125 | K4 | 1-1924558-8 |
| 19206495 | BLACK | C126 | K2 | 1-1924558-7 |
| 19206494 | BLACK | C125 | K1 | 1-1924558-6 |
| 19206493 | BLACK | C124 | K3 | 1-1924558-5 |
| 19206492 | BLACK | C123 | K3 | 1-1924558-4 |
| | | | | |
| | | | | |
| | | | | |
| 19206488 | BLACK | C46 | K3 | 1-1924558-0 |
| | | | | |
| 19152767 | BLACK | C37 | K2 | 1924558-8 |
| 19180411 | BLACK | C22 | K3 | 1924558-7 |
| | | | | |
| 19179682 | BLACK | C22 | K6 | 1924558-5 |
| | | | | |
| | | | | |
| 19179684 | BLACK | C29 | K5 | 1924558-2 |
| 19179685 | BLACK | C28 | K2 | 1924558-1 |
| GM PART NUMBER | SLIDE COLOR | CIRCUIT ARRANGEMENT (SEE TABLE ON SH 5 & 6) | KEYING ARRANGEMENT (SEE TABLE ON SHEET 5) | PART NUMBER |

THIS DRAWING IS A CONTROLLED DOCUMENT.

DIMENSIONS: mm

TOLERANCES UNLESS OTHERWISE SPECIFIED:
0 PLC ±-
1 PLC ±0.5
2 PLC ±0.20
3 PLC ±-
4 PLC ±-
ANGLES ±-

MATERIAL - SEE CALLOUT

FINISH - SEE CALLOUT

DWN J.R.SHUEY 31MAR2000
CHK V.KANE 31MAR2000
APVD J.M.MYER 31MAR2000

PRODUCT SPEC -

APPLICATION SPEC 114-13060

WEIGHT -

TE Connectivity

NAME ASSEMBLY, FEMALE, 60 WAY GET SDM CONNECTOR (SHUNTLESS VERSION)

| SIZE | CAGE CODE | DRAWING NO | RESTRICTED TO |
|---|---|---|---|
| A1 | 00779 | C-638595 | - |

CUSTOMER DRAWING | SCALE 2:1 | SHEET 4 OF 10 | REV DA3

4805 (3/13)

THIS DRAWING IS UNPUBLISHED. RELEASED FOR PUBLICATION 20
© COPYRIGHT 20 BY - ALL RIGHTS RESERVED.

REVISIONS

| P | LTR | DESCRIPTION | DATE | DWN | APVD |
|---|---|---|---|---|---|
| | - | SEE SHEET 1 | - | - | - |

NOT INTENDED FOR PRODUCTION USE
SERVICE PART

| | | | |
|---|---|---|---|
| | | | |
| | | | |
| 9 BLACK | C3 | K0 | 8-184464-7 |
| SLIDE COLOR | CIRCUIT ARRANGEMENT (SEE TABLE ON SHEET 4) | KEYING ARRANGEMENT (SEE TABLE ON SHEET 4) | PART NUMBER |

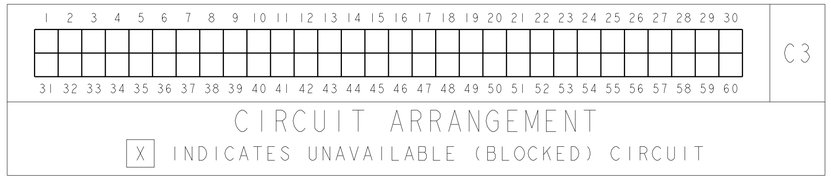


CIRCUIT ARRANGEMENT

X INDICATES UNAVAILABLE (BLOCKED) CIRCUIT

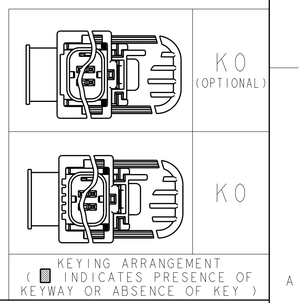


KEYING ARRANGEMENT
( ■ INDICATES PRESENCE OF KEYWAY OR ABSENCE OF KEY )

NOT INTENDED FOR PRODUCTION USE
SERVICE PART

THIS DRAWING IS A CONTROLLED DOCUMENT.

DIMENSIONS: mm

TOLERANCES UNLESS OTHERWISE SPECIFIED:
0 PLC ±-
1 PLC ±0.5
2 PLC ±0.20
3 PLC ±-
4 PLC ±-
ANGLES ±-

MATERIAL - SEE CALLOUT
FINISH - SEE CALLOUT

DWN J.R.SHUEY 31MAR2000
CHK V.KANE 31MAR2000
APVD J.M.MYER 31MAR2000
PRODUCT SPEC -
APPLICATION SPEC 114-13060
WEIGHT -

TE Connectivity

NAME ASSEMBLY, FEMALE, 60 WAY GET SDM CONNECTOR (SHUNTLESS VERSION)

| SIZE | CAGE CODE | DRAWING NO | RESTRICTED TO |
|---|---|---|---|
| A1 | 00779 | C-638595 | - |

CUSTOMER DRAWING SCALE 2:1 SHEET 5 OF 10 REV BA3

THIS DRAWING IS UNPUBLISHED. RELEASED FOR PUBLICATION 20
© COPYRIGHT 20 BY - ALL RIGHTS RESERVED.

REVISIONS

| P | LTR | DESCRIPTION | DATE | DWN | APVD |
|---|---|---|---|---|---|
| | - | SEE SHEET 1 | - | - | - |

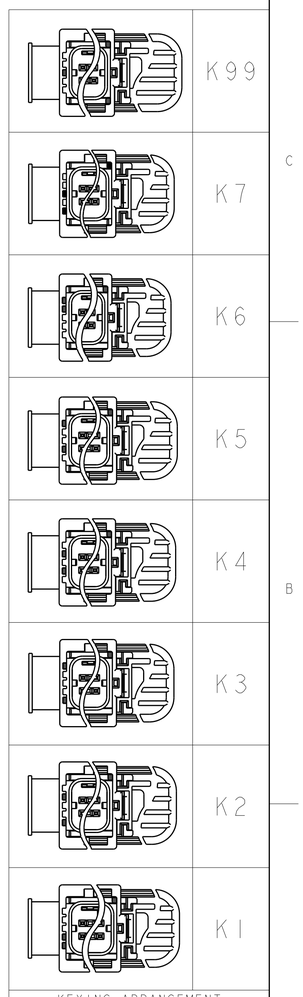


KEYING ARRANGEMENT
( ▨ INDICATES PRESENCE OF KEYWAY OR ABSENCE OF KEY )

THIS DRAWING IS A CONTROLLED DOCUMENT.

DIMENSIONS: mm

TOLERANCES UNLESS OTHERWISE SPECIFIED:
0 PLC ±-
1 PLC ±0.5
2 PLC ±0.20
3 PLC ±-
4 PLC ±-
ANGLES ±-

MATERIAL - SEE CALLOUT

FINISH - SEE CALLOUT

DWN J.R.SHUEY 31MAR2000
CHK V.KANE 31MAR2000
APVD J.M.MYER 31MAR2000

PRODUCT SPEC -

APPLICATION SPEC 114-13060

WEIGHT -

TE Connectivity

NAME ASSEMBLY, FEMALE, 60 WAY GET SDM CONNECTOR (SHUNTLESS VERSION)

| SIZE | CAGE CODE | DRAWING NO | RESTRICTED TO |
|---|---|---|---|
| A1 | 00779 | C-638595 | - |

CUSTOMER DRAWING

SCALE 2:1 SHEET 6 OF 10 REV BA3

4805 (3/13)

THIS DRAWING IS UNPUBLISHED. RELEASED FOR PUBLICATION 20
© COPYRIGHT 20 BY - ALL RIGHTS RESERVED.

REVISIONS

| P | LTR | DESCRIPTION | DATE | DWN | APVD |
|---|---|---|---|---|---|
| | - | SEE SHEET 1 | - | - | - |

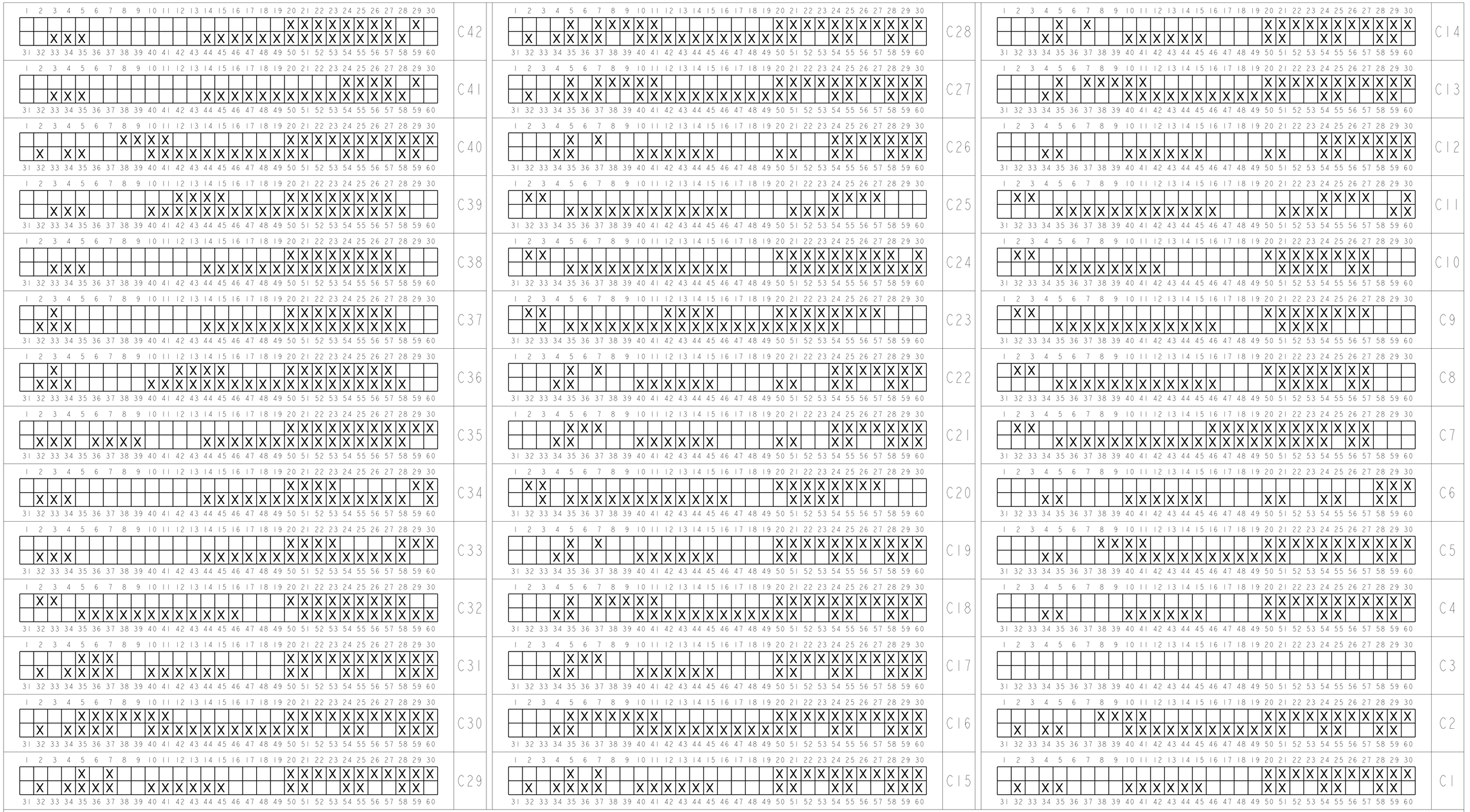


# CIRCUIT ARRANGEMENT

X INDICATES UNAVAILABLE (BLOCKED) CIRCUIT

THIS DRAWING IS A CONTROLLED DOCUMENT.

DIMENSIONS: mm

TOLERANCES UNLESS OTHERWISE SPECIFIED:
0 PLC ±-
1 PLC ±0.5
2 PLC ±0.20
3 PLC ±-
4 PLC ±-
ANGLES ±-

MATERIAL - SEE CALLOUT

FINISH - SEE CALLOUT

DWN J.R.SHUEY 31MAR2000
CHK V.KANE 31MAR2000
APVD J.M.MYER 31MAR2000

PRODUCT SPEC -

APPLICATION SPEC 114-13060

WEIGHT -

TE Connectivity

NAME ASSEMBLY, FEMALE, 60 WAY GET SDM CONNECTOR (SHUNTLESS VERSION)

| SIZE | CAGE CODE | DRAWING NO | RESTRICTED TO |
|---|---|---|---|
| A1 | 00779 | C-638595 | - |

CUSTOMER DRAWING

SCALE 2:1 SHEET 7 OF 10 REV BA3

4805 (3/13)

THIS DRAWING IS UNPUBLISHED. RELEASED FOR PUBLICATION 20
© COPYRIGHT 20 BY - ALL RIGHTS RESERVED.

REVISIONS

| P | LTR | DESCRIPTION | DATE | DWN | APVD |
|---|---|---|---|---|---|
| | - | SEE SHEET 1 | - | - | - |

| | 1 | 2 | 3 | 4 | 5 | 6 | 7 | 8 | 9 | 10 | 11 | 12 | 13 | 14 | 15 | 16 | 17 | 18 | 19 | 20 | 21 | 22 | 23 | 24 | 25 | 26 | 27 | 28 | 29 | 30 |
|---|---|---|---|---|---|---|---|---|---|---|---|---|---|---|---|---|---|---|---|---|---|---|---|---|---|---|---|---|---|---|
| C84 | | | | | X | | X | X | X | X | X | | | | | | | | | X | X | X | X | X | X | X | X | X | X | X |
| | | X | | X | X | | | | | X | X | X | X | X | X | X | X | X | X | X | X | | | X | X | | | X | X | X |
| C83 | | | | | X | | X | | | | | | | | | | | | | X | X | X | X | X | X | X | X | X | X | X |
| | | X | | X | X | | | | | X | X | X | X | X | X | | | | | X | X | | | X | X | | | X | X | X |
| C82 | | | | | X | | X | | | | | | | | | | | | | | | | | X | X | X | X | X | X | X |
| | | X | | X | X | | | | | X | X | X | X | X | X | | | | | X | X | | | X | X | | | X | X | X |
| C81 | | | | | X | | X | | | | | | | | | | | | | | | | | X | X | X | X | X | X | X |
| | | X | | X | X | | | | | X | X | X | X | X | X | | | | | X | X | | | X | X | | | X | X | |
| C80 | | | | | X | | X | | | | | | | | | | | | | X | X | X | X | X | X | X | X | X | X | X |
| | | X | | X | X | | | | | X | X | X | X | X | X | | | | | X | X | | | X | X | | | X | X | |
| C79 | | | X | | | | | | | | | | | | | | | | | X | X | X | X | X | X | X | X | | | X |
| | | | X | X | X | X | X | X | X | | | | | X | X | X | X | X | X | X | X | X | X | X | X | X | X | X | | |
| C78 | | | | | | | | | | | | X | X | X | X | | | | | X | X | X | X | X | X | X | X | | X | X |
| | | | | X | X | X | | | | X | X | X | X | X | X | X | X | X | X | X | X | X | X | X | X | X | X | X | | |
| C77 | | | | | | | | | | | | | | | | | | | | X | X | X | X | X | X | X | X | | X | X |
| | | | | X | X | X | | | | | | | | X | X | X | X | X | X | X | X | X | X | X | X | X | X | | | |
| C76 | | | | | | | | | | | | | | | | X | X | X | X | | | | | | | | | | | |
| | | | | X | X | X | | | | | | | | | | | X | X | X | X | X | X | X | X | X | X | X | | | |
| C75 | | | X | | | X | | | | | X | | | X | X | X | X | X | X | | X | | | X | X | | | X | | X | X |
| | | | X | | | X | | | | | | | | X | X | | | | | X | X | | | | | X | | | X | X |
| C74 | | | X | | | X | | | | | X | | | X | X | X | X | X | X | | X | | | X | | | | X | | X | X |
| | | | X | | | X | | | | | | | | X | X | X | | | | X | X | | | | | X | | | X | X |
| C73 | | | X | | | X | | | | | X | | | X | X | X | X | X | X | | X | | | X | | | | X | | X | X |
| | | | X | | | X | | | | | | | | X | X | | | | | X | X | | | | | X | | | X | X |
| C72 | | | | X | X | X | X | X | | | | X | X | X | X | X | X | X | X | X | X | X | X | X | X | X | X | X | | X | X |
| | | | | | | X | | X | | X | X | X | X | X | X | X | X | X | X | X | X | X | X | X | X | X | X | X | | | X |
| C71 | | | | X | | | | | | | | X | X | X | X | X | X | X | X | X | X | X | X | | | | | | | | |
| | | | | X | X | X | | X | | X | X | X | X | X | X | X | X | X | X | X | X | X | X | X | X | X | X | | | |

| | 1 | 2 | 3 | 4 | 5 | 6 | 7 | 8 | 9 | 10 | 11 | 12 | 13 | 14 | 15 | 16 | 17 | 18 | 19 | 20 | 21 | 22 | 23 | 24 | 25 | 26 | 27 | 28 | 29 | 30 |
|---|---|---|---|---|---|---|---|---|---|---|---|---|---|---|---|---|---|---|---|---|---|---|---|---|---|---|---|---|---|---|
| C70 | | | | X | X | X | X | | | | | | | | | X | X | X | X | X | X | X | X | X | X | X | | | X | |
| | | | | | X | | X | | | | | | | X | X | X | X | X | X | X | X | X | X | X | X | | | | X |
| C69 | | | | | | | | | | | | | | | | X | X | X | X | X | X | X | | | | | | | | |
| | | | X | X | X | | X | | X | | | | | X | X | X | X | X | X | X | X | X | X | X | X | | | | | |
| C68 | | | | X | X | X | X | | | | | | | | | X | X | X | X | X | X | | | X | X | X | X | | X | X |
| | | | | | X | | X | | | X | | | | | | X | X | X | X | X | X | X | X | X | X | X | | | | X |
| C67 | | | | | | | | | | | | | | | | X | X | X | X | X | X | | | | | | | | | |
| | | | X | X | X | | X | | X | | | | | | | | | X | X | X | X | X | X | X | X | X | X | | | |
| C66 | | | X | | | | | | | | | | | | | | | | | | | | | X | X | X | X | | | X |
| | | | | X | X | X | | | | | | | | | | | | | | X | X | X | X | X | X | X | X | | | |
| C65 | | | X | | | | | | | | | | X | X | X | X | | | | | X | X | X | X | X | X | X | | | X |
| | | | X | X | X | | | | | X | X | X | X | X | X | X | X | X | X | X | X | X | X | X | X | X | X | | | |
| C64 | | | | | | | | | | | | | | | | | X | X | X | X | X | X | | | | | | | | |
| | | | | | X | | X | | X | | | | | | | | | X | X | X | X | X | X | X | X | X | X | | | |
| C63 | | | X | | | | | | | | | | | | | | | | | | | X | X | X | X | | | | | |
| | | | X | X | X | | | | | | | | | | | | | | | | | X | X | X | X | X | X | X | | |
| C62 | | X | | X | | | | | X | | | | X | X | X | X | X | X | | | X | | | X | | | | X | X | | X | X |
| | | X | | | X | X | X | | | X | | X | X | X | X | | | | | X | X | | | X | | | | X | | X | X |
| C61 | | X | | X | X | | | | | X | | | X | X | X | X | X | X | | X | X | X | | | | | X | X | | X | X |
| | | X | | | X | X | X | | | X | | X | X | X | X | | | | | X | X | | X | | | | X | | | X | X |
| C60 | | | | | | | | | | | | | | | | | X | X | X | X | X | X | X | X | | | | | | |
| | | | | | X | | X | | X | | | | | | | | | | | X | X | X | X | X | X | X | X | | | |
| C59 | | | | | | | | | | | | | | | | | | | | | | X | X | X | | | | | | |
| | | | | X | X | X | | | | | | | | | | | | | | | | X | X | X | X | X | X | X | | |
| C58 | | | | | | | | | | | | | | | | | X | X | X | X | X | X | X | | | | | | | |
| | | | | X | X | X | | | | | | | | | | X | X | X | X | X | X | X | X | X | X | X | X | | | |
| C57 | | | | | | | | | | | | | | | | | | | | X | X | X | X | | | | | | | |
| | | | | X | X | X | | | | | | | | | | X | X | X | X | X | X | X | X | X | X | X | X | | | |

| | 1 | 2 | 3 | 4 | 5 | 6 | 7 | 8 | 9 | 10 | 11 | 12 | 13 | 14 | 15 | 16 | 17 | 18 | 19 | 20 | 21 | 22 | 23 | 24 | 25 | 26 | 27 | 28 | 29 | 30 |
|---|---|---|---|---|---|---|---|---|---|---|---|---|---|---|---|---|---|---|---|---|---|---|---|---|---|---|---|---|---|---|
| C56 | | | | | X | | X | | | | | | | | | | | | | | | | | X | X | X | X | X | X | X |
| | | X | | X | X | X | X | | | X | X | X | X | X | X | | | | | X | X | | | X | X | | | X | X | |
| C55 | | | | | | | | | | | | | | | | | | | | X | X | X | X | X | X | X | X | | X | X |
| | | | X | X | X | | X | | X | | | | | X | X | X | X | X | X | X | X | X | X | X | X | | | | | |
| C54 | | | | | | | | | | | | | X | X | X | X | | | | X | X | X | X | X | X | X | X | | X | X |
| | | | X | X | X | | X | | X | X | X | X | X | X | X | X | X | X | X | X | X | X | X | X | X | X | X | | | |
| C53 | | | | | | | | | | | | | | | | | | | | X | X | X | X | | | | | | | |
| | | | X | X | X | | | | | | | | X | X | X | X | X | X | X | X | X | X | X | X | X | X | X | | | X |
| C52 | | | | | | | | | | | | | | | | | | | | X | X | X | X | | | | | | X | |
| | | | X | X | X | | | | | | | | X | X | X | X | X | X | X | X | X | X | X | X | X | X | X | | | |
| C51 | | | | | | | | | | | | | | | | | | | | X | X | X | X | | | | | | | |
| | | | X | X | X | | | | | | | | | | | | | X | X | X | X | X | X | X | X | X | X | | | |
| C50 | | | | | | | | | | | | | | | | | | | | X | X | X | X | | | | | | | |
| | | | X | X | X | | | | | | | | X | X | X | X | X | X | X | X | X | X | X | X | X | X | X | | | |
| C49 | | | | | | | | | | | | | | | | | | | | | | | | X | X | X | X | | | |
| | | X | | X | X | X | X | X | X | | X | X | X | | | | | | | | | | | | X | X | X | X | X | |
| C48 | | | | | | | | | | | | | X | X | X | X | X | X | X | X | X | X | X | X | X | X | X | | | X |
| | | | X | X | X | X | X | X | X | X | X | X | X | X | X | X | X | X | X | X | X | X | X | X | X | X | X | X | | |
| C47 | | | | | X | | X | X | X | X | X | | | | | | | | | X | X | X | X | X | X | X | X | X | X | X |
| | | X | | X | X | | | | | X | X | X | X | X | X | X | X | X | X | X | X | | | X | X | | | X | X | |
| C46 | | | X | | | | | | | | | X | X | X | | | | | | X | X | X | X | X | X | X | X | | | |
| | | | X | X | X | | | | | X | X | X | X | X | X | X | X | X | X | X | X | X | X | X | X | X | X | | | |
| C45 | | | X | | | | | | | | | | | | | | | | | | | | | X | X | X | X | | | |
| | | | X | X | X | | | | | | | | | | | | | X | X | X | X | X | X | X | X | X | X | | | |
| C44 | | | | | | | | | | | | | | | | | | | | | | | | X | X | X | X | | | |
| | | | X | X | X | | | | | | | | | | | | | X | X | X | X | X | X | X | X | X | X | | | |
| C43 | | | | | | | | | | | | | | | | | | | | X | X | X | X | X | X | X | X | | | X |
| | | | | | X | X | X | X | X | | | | X | X | X | X | X | X | X | X | X | X | X | X | X | X | X | | | |

# CIRCUIT ARRANGEMENT

X INDICATES UNAVAILABLE (BLOCKED) CIRCUIT

THIS DRAWING IS A CONTROLLED DOCUMENT.

DIMENSIONS: mm

TOLERANCES UNLESS OTHERWISE SPECIFIED:
0 PLC ±-
1 PLC ±0.5
2 PLC ±0.20
3 PLC ±-
4 PLC ±-
ANGLES ±-

MATERIAL - SEE CALLOUT

FINISH - SEE CALLOUT

DWN J.R.SHUEY 31MAR2000
CHK V.KANE 31MAR2000
APVD J.M.MYER 31MAR2000

PRODUCT SPEC -

APPLICATION SPEC 114-13060

WEIGHT -

TE Connectivity

NAME ASSEMBLY, FEMALE, 60 WAY GET SDM CONNECTOR (SHUNTLESS VERSION)

| SIZE | CAGE CODE | DRAWING NO | RESTRICTED TO |
|---|---|---|---|
| A1 | 00779 | C-638595 | - |

CUSTOMER DRAWING

SCALE 2:1 SHEET 8 OF 10 REV BA3

4805 (3/13)

THIS DRAWING IS UNPUBLISHED. RELEASED FOR PUBLICATION 20
© COPYRIGHT 20 BY - ALL RIGHTS RESERVED.

REVISIONS

| P | LTR | DESCRIPTION | DATE | DWN | APVD |
|---|---|---|---|---|---|
| | - | SEE SHEET 1 | - | - | - |

| | 1 | 2 | 3 | 4 | 5 | 6 | 7 | 8 | 9 | 10 | 11 | 12 | 13 | 14 | 15 | 16 | 17 | 18 | 19 | 20 | 21 | 22 | 23 | 24 | 25 | 26 | 27 | 28 | 29 | 30 |
|---|---|---|---|---|---|---|---|---|---|---|---|---|---|---|---|---|---|---|---|---|---|---|---|---|---|---|---|---|---|---|
| C126 | | | | | X | | X | X | X | X | X | | | | | | | | | | | | | | | | | X | X | X |
| | | | | X | X | | | | | X | X | X | X | X | X | | | | | X | X | | | X | X | | | X | X | |
| C125 | | | | | X | | X | | | | | | | | | | | | | | | | | | | | | X | X | X |
| | | | | X | X | | | | | X | X | X | X | X | X | | | | | X | X | | | X | X | | | X | X | |
| C124 | | | X | | | | | | | | | | | | | | | | | X | X | X | X | X | X | X | X | | | |
| | | | X | X | X | | | | | | | | X | X | X | X | X | X | X | X | X | X | X | X | X | X | X | | | |
| C123 | | | X | | | | | | | | | | | | | | | | | X | X | X | X | X | X | X | X | | | |
| | | | X | X | X | | | | | | | | | | | | | X | X | X | X | X | X | X | X | X | X | | | |
| C122 | | | | X | | | | | | | | | X | X | X | X | X | | X | X | X | X | X | | | X | | | | X |
| | | | | | | X | X | | | X | | | X | X | X | | | X | X | | | | | | | X | | | X | X |
| C121 | | | | | | | | | | | | | | | | | | | | X | X | X | X | X | | | | | | X |
| | | | X | X | X | | | | | | | | | | | | | X | X | X | X | X | X | X | X | X | X | | | |
| C120 | | | X | | | | | | | | | | | | | | | | | X | X | X | X | | | | | | | X |
| | X | X | X | | | | | | | | | | X | X | X | X | X | X | X | X | X | X | X | X | X | X | X | | | |
| C119 | | | | | | | | | | | | | | | | | | | | | | | | | | | | | | X |
| | | | X | X | X | | | | | | | | | | | | | X | X | X | X | X | X | X | X | X | X | | | |
| C118 | | | | | | | | | | | | | | | | | | | | | | | | | | | | | X | X |
| | | | X | X | X | | | | | | | | X | X | X | X | X | X | X | X | X | X | X | X | X | X | X | | | |
| C117 | | | | | | | | | | | | X | X | X | X | | | | | | | | | | | | | | X | X |
| | | | X | X | X | | | | | X | X | X | X | X | X | X | X | X | X | X | X | X | X | X | X | X | X | | | |
| C116 | | | | | | | | | | | | | | | | | | | | X | X | X | X | X | X | X | X | | | |
| | X | X | X | | | | | | | | | | X | X | X | X | X | X | X | X | X | X | X | X | X | X | X | | | |
| C115 | | X | | | X | | | | | X | | | X | | | X | X | X | | | | | | X | | | X | | X | |
| | X | | | | X | | | | | | | | X | X | | | | | X | X | | | | | | X | | | X | X |
| C114 | | | | | | | | | | | | | | | | | | | | | | | | | | | | | | |
| | | | X | X | X | | | | | | | | | | | | | X | X | X | X | X | X | X | X | X | X | | | |
| C113 | | | | | | | | | | | | | | | | | | | | | | | | | | | | | X | |
| | | | X | X | X | | | | | | | | | | | | | X | X | X | X | X | X | X | X | X | X | | | |

| | 1 | 2 | 3 | 4 | 5 | 6 | 7 | 8 | 9 | 10 | 11 | 12 | 13 | 14 | 15 | 16 | 17 | 18 | 19 | 20 | 21 | 22 | 23 | 24 | 25 | 26 | 27 | 28 | 29 | 30 |
|---|---|---|---|---|---|---|---|---|---|---|---|---|---|---|---|---|---|---|---|---|---|---|---|---|---|---|---|---|---|---|
| C112 | | | X | | | | | | | | | X | X | X | X | X | X | X | X | X | X | X | X | X | X | X | | X | X | |
| | | | X | X | X | X | X | X | X | X | X | X | X | X | X | X | X | X | X | X | X | X | X | X | X | X | X | | | X |
| C111 | | | | X | X | X | X | X | | | | | | | | | | | | | | | | | | | | | | |
| | | X | | | X | | X | | X | X | X | X | X | X | X | X | X | X | X | X | X | X | X | X | X | X | X | X | X | X |
| C110 | | | X | | | | | | | | | | | | | | | | | X | X | | | X | X | | | | | |
| | | | X | X | X | | | | | | | | | | | | | | | X | X | X | X | X | X | X | X | | | X |
| C109 | | | | | X | | | | | X | | | | | | | | | | X | X | X | | | | | | | | |
| | | X | | | | | X | X | | X | | | X | X | X | | | | | X | X | | | | | | X | | | X | X |
| C108 | | X | | | X | X | | | | | | | | | | | | | | X | X | X | | | | | | | | |
| | | X | | | | X | X | X | | | | | X | X | X | | | | | | X | | | | | | X | | | X |
| C107 | | | | | X | | | | | X | | | | | | | | | | X | X | X | | | | | | | | |
| | | X | | | | | X | X | | X | | | X | X | X | | | | | X | | | | | | | X | | | X | X |
| C106 | | | X | | | | | | | | | | | | | | | | | | | | | | | | | | | |
| | | | X | X | X | | | | | | | X | X | X | X | | | | | X | X | X | X | X | X | X | X | | X | X |
| C105 | | | X | | | | | | | | | | | | | | | | | | | | | | | | | | | |
| | | | X | X | X | | | | | | | | | | | | | | | X | X | X | X | X | X | X | X | | X | X |
| C104 | | | | | | | | | | | | | | | | | | | | | | | | | | | | | | |
| | | | | | | | | | | | | | | | | | | | | X | X | X | X | X | X | X | X | | X | X |
| C103 | | | X | | | | | | | | | | | | | | | | | | | | | | | | | | | |
| | | X | X | X | | | | | | | | | | | | | | | | X | X | X | X | X | X | X | X | | | |
| C102 | | | X | | | | | | | | | | | | | | | | | | | | | | | | | | | |
| | | | X | X | X | | X | | X | | X | X | X | X | X | X | X | X | X | X | X | X | X | X | X | X | X | | | |
| C101 | | | | | X | X | X | X | X | | | | | | | | | | | | | | | | | | | | | |
| | | | | | X | | | | | | | | | | | | | | | X | X | X | X | X | X | X | X | | X | X |
| C100 | | | | | | | | | | | | | | | | | | | | | | | | | | | | | | |
| | | | | | X | X | X | X | X | | | | | | | | | | | | | | | | | | | | | |
| C99 | | | | | | | | | | | | | | | | | | | | | | | | | | | | | | |
| | | | X | X | X | | | | | | | | | | | | | | | X | X | X | X | X | X | X | X | | X | X |

| | 1 | 2 | 3 | 4 | 5 | 6 | 7 | 8 | 9 | 10 | 11 | 12 | 13 | 14 | 15 | 16 | 17 | 18 | 19 | 20 | 21 | 22 | 23 | 24 | 25 | 26 | 27 | 28 | 29 | 30 |
|---|---|---|---|---|---|---|---|---|---|---|---|---|---|---|---|---|---|---|---|---|---|---|---|---|---|---|---|---|---|---|
| C98 | | | | | | | | | | | | | | | | | | | | X | X | X | X | | | | | | | |
| | | | X | X | X | | | | | | | X | X | X | X | X | X | X | X | X | X | | | | | | | | | |
| C97 | | | X | X | X | X | X | | | | | X | X | X | X | | | | | X | X | X | X | X | X | X | X | | X | X |
| | | | | | X | | | | | X | X | X | X | X | X | X | X | X | X | X | X | X | X | X | X | X | X | | | X |
| C96 | | | | | | | | | | | | | | | | X | X | X | X | | | | | | | | | | X | X |
| | | | X | X | X | | | | | | | X | X | X | X | X | X | X | X | X | X | X | X | X | X | X | | | | |
| C95 | | | X | | | | | | | | | X | X | X | X | X | X | X | X | X | X | X | | | | | | | X | X |
| | | | X | X | X | | X | | X | X | X | X | X | X | X | X | X | X | X | X | X | X | X | X | X | X | X | | | |
| C94 | | | | | | | | | | | | | | | | X | X | X | X | X | X | X | X | | | | | | X | X |
| | | | X | X | X | | X | | X | | | | | | | X | X | X | X | X | X | X | X | X | X | X | X | | | |
| C93 | | | | | | | | | | | | | | | | X | X | X | X | X | X | | | | | | | | X | X |
| | | | X | X | X | | X | | X | | | | | | | | | X | X | X | X | X | X | X | X | X | X | | | |
| C92 | | | | | | | | | | | | | | | | X | X | X | X | | | | | | | | | | | X |
| | | | X | X | X | | | | | | | | | | | X | X | X | X | X | X | X | X | X | X | X | X | | | |
| C91 | | | | | | | | | | | | | | | | X | X | X | X | | | | | | | | | | X | |
| | | | X | X | X | | | | | | | | | | | X | X | X | X | X | X | X | X | X | X | X | X | | | |
| C90 | | | | | | | | | | | | | | | | X | X | X | X | | | | | | | | | | X | |
| | | | | | X | X | X | | | | | | | | | X | X | X | X | X | X | X | X | X | X | X | X | | | |
| C89 | | | | | | | | | | | | | | | | X | X | X | X | X | X | X | | | | | | | X | |
| | | | X | X | X | | | | | | | | | | | X | X | X | X | X | X | X | X | X | X | X | X | | | |
| C88 | | | X | | | | | | | | | | | | | | | | | X | X | X | X | X | X | X | X | | | X |
| | | | X | X | X | | | | | | | | | | | | | X | X | X | X | X | X | X | X | X | X | | | |
| C87 | | | X | | | | | | | | | | | | | | | | | X | X | X | X | X | X | X | X | | | X |
| | | | X | X | X | | | | | | | | | | | X | X | X | X | X | X | X | X | X | X | X | X | | | |
| C86 | | | X | X | X | X | X | | | | | X | X | X | X | | | | | X | X | X | X | X | X | X | X | | X | X |
| | | | X | X | X | | X | | X | X | X | X | X | X | X | X | X | X | X | X | X | X | X | X | X | X | X | | | X |
| C85 | | | X | X | X | X | X | | | | | X | X | X | X | | | | | X | X | X | X | X | X | X | X | | X | X |
| | | | | | X | | X | | X | X | X | X | X | X | X | X | X | X | X | X | X | X | X | X | X | X | X | | | X |

# CIRCUIT ARRANGEMENT

X INDICATES UNAVAILABLE (BLOCKED) CIRCUIT

THIS DRAWING IS A CONTROLLED DOCUMENT.

DIMENSIONS: mm

TOLERANCES UNLESS OTHERWISE SPECIFIED:
0 PLC ±-
1 PLC ±0.5
2 PLC ±0.20
3 PLC ±-
4 PLC ±-
ANGLES ±-

MATERIAL - SEE CALLOUT

FINISH - SEE CALLOUT

| | | |
|---|---|---|
| DWN | J.R.SHUEY | 31MAR2000 |
| CHK | V.KANE | 31MAR2000 |
| APVD | J.M.MYER | 31MAR2000 |

PRODUCT SPEC -

APPLICATION SPEC 114-13060

WEIGHT -

TE Connectivity

NAME ASSEMBLY, FEMALE, 60 WAY GET SDM CONNECTOR (SHUNTLESS VERSION)

| SIZE | CAGE CODE | DRAWING NO | RESTRICTED TO |
|---|---|---|---|
| A1 | 00779 | C-638595 | - |

CUSTOMER DRAWING | SCALE 2:1 | SHEET 9 OF 10 | REV BA3

4805 (3/13)

THIS DRAWING IS UNPUBLISHED. RELEASED FOR PUBLICATION 20
© COPYRIGHT 20 BY - ALL RIGHTS RESERVED.

REVISIONS

| P | LTR | DESCRIPTION | DATE | DWN | APVD |
|---|---|---|---|---|---|
| | - | SEE SHEET 1 | - | - | - |

| | 1 | 2 | 3 | 4 | 5 | 6 | 7 | 8 | 9 | 10 | 11 | 12 | 13 | 14 | 15 | 16 | 17 | 18 | 19 | 20 | 21 | 22 | 23 | 24 | 25 | 26 | 27 | 28 | 29 | 30 |
|---|---|---|---|---|---|---|---|---|---|---|---|---|---|---|---|---|---|---|---|---|---|---|---|---|---|---|---|---|---|---|
| | | | | | X | | X | | | | | | | | | | | | | | | | | | | | | X | X | X |
| | | | | X | X | | | | | X | X | X | X | X | X | | | | | X | X | | | X | X | | | X | X | |
| | 31 | 32 | 33 | 34 | 35 | 36 | 37 | 38 | 39 | 40 | 41 | 42 | 43 | 44 | 45 | 46 | 47 | 48 | 49 | 50 | 51 | 52 | 53 | 54 | 55 | 56 | 57 | 58 | 59 | 60 |

C134

| | 1 | 2 | 3 | 4 | 5 | 6 | 7 | 8 | 9 | 10 | 11 | 12 | 13 | 14 | 15 | 16 | 17 | 18 | 19 | 20 | 21 | 22 | 23 | 24 | 25 | 26 | 27 | 28 | 29 | 30 |
|---|---|---|---|---|---|---|---|---|---|---|---|---|---|---|---|---|---|---|---|---|---|---|---|---|---|---|---|---|---|---|
| | | | | | X | | | X | | X | X | X | X | X | | X | X | X | | X | X | X | X | X | X | | | X | X | |
| | | | | X | X | X | X | X | | X | | | | | | | | | | | | X | | | X | X | X | | | X |
| | 31 | 32 | 33 | 34 | 35 | 36 | 37 | 38 | 39 | 40 | 41 | 42 | 43 | 44 | 45 | 46 | 47 | 48 | 49 | 50 | 51 | 52 | 53 | 54 | 55 | 56 | 57 | 58 | 59 | 60 |

C132

| | 1 | 2 | 3 | 4 | 5 | 6 | 7 | 8 | 9 | 10 | 11 | 12 | 13 | 14 | 15 | 16 | 17 | 18 | 19 | 20 | 21 | 22 | 23 | 24 | 25 | 26 | 27 | 28 | 29 | 30 |
|---|---|---|---|---|---|---|---|---|---|---|---|---|---|---|---|---|---|---|---|---|---|---|---|---|---|---|---|---|---|---|
| | | | | | X | | | X | | X | | X | X | X | | X | X | X | | X | X | | X | X | X | X | X | X | X | |
| | | X | | X | X | X | X | X | | X | | | | X | | | | | | | | X | | | X | X | X | X | X | X |
| | 31 | 32 | 33 | 34 | 35 | 36 | 37 | 38 | 39 | 40 | 41 | 42 | 43 | 44 | 45 | 46 | 47 | 48 | 49 | 50 | 51 | 52 | 53 | 54 | 55 | 56 | 57 | 58 | 59 | 60 |

C131

| | 1 | 2 | 3 | 4 | 5 | 6 | 7 | 8 | 9 | 10 | 11 | 12 | 13 | 14 | 15 | 16 | 17 | 18 | 19 | 20 | 21 | 22 | 23 | 24 | 25 | 26 | 27 | 28 | 29 | 30 |
|---|---|---|---|---|---|---|---|---|---|---|---|---|---|---|---|---|---|---|---|---|---|---|---|---|---|---|---|---|---|---|
| | | | X | | | | | | | | | | | | | | | | | X | X | X | X | | | | | | | |
| | | | X | X | X | | | | | | | | | | | | | | | | | | | | | | | | | |
| | 31 | 32 | 33 | 34 | 35 | 36 | 37 | 38 | 39 | 40 | 41 | 42 | 43 | 44 | 45 | 46 | 47 | 48 | 49 | 50 | 51 | 52 | 53 | 54 | 55 | 56 | 57 | 58 | 59 | 60 |

C130

| | 1 | 2 | 3 | 4 | 5 | 6 | 7 | 8 | 9 | 10 | 11 | 12 | 13 | 14 | 15 | 16 | 17 | 18 | 19 | 20 | 21 | 22 | 23 | 24 | 25 | 26 | 27 | 28 | 29 | 30 |
|---|---|---|---|---|---|---|---|---|---|---|---|---|---|---|---|---|---|---|---|---|---|---|---|---|---|---|---|---|---|---|
| | | | | | | | | | | X | | | | X | X | X | X | X | | X | X | X | | | | X | | | | X |
| | | X | | | | X | X | | | X | | | X | X | X | | | | X | X | | | | | | X | | | X | X |
| | 31 | 32 | 33 | 34 | 35 | 36 | 37 | 38 | 39 | 40 | 41 | 42 | 43 | 44 | 45 | 46 | 47 | 48 | 49 | 50 | 51 | 52 | 53 | 54 | 55 | 56 | 57 | 58 | 59 | 60 |

C129

| | 1 | 2 | 3 | 4 | 5 | 6 | 7 | 8 | 9 | 10 | 11 | 12 | 13 | 14 | 15 | 16 | 17 | 18 | 19 | 20 | 21 | 22 | 23 | 24 | 25 | 26 | 27 | 28 | 29 | 30 |
|---|---|---|---|---|---|---|---|---|---|---|---|---|---|---|---|---|---|---|---|---|---|---|---|---|---|---|---|---|---|---|
| | | X | | X | X | | | | | | | | | X | X | X | X | | | X | X | X | | | | X | | | | X |
| | | X | | | X | X | X | | | X | | X | X | X | X | | | | X | | X | | | | | X | | | | X |
| | 31 | 32 | 33 | 34 | 35 | 36 | 37 | 38 | 39 | 40 | 41 | 42 | 43 | 44 | 45 | 46 | 47 | 48 | 49 | 50 | 51 | 52 | 53 | 54 | 55 | 56 | 57 | 58 | 59 | 60 |

C128

| | 1 | 2 | 3 | 4 | 5 | 6 | 7 | 8 | 9 | 10 | 11 | 12 | 13 | 14 | 15 | 16 | 17 | 18 | 19 | 20 | 21 | 22 | 23 | 24 | 25 | 26 | 27 | 28 | 29 | 30 |
|---|---|---|---|---|---|---|---|---|---|---|---|---|---|---|---|---|---|---|---|---|---|---|---|---|---|---|---|---|---|---|
| | | | | X | | | | | | | | | | X | X | X | X | X | | X | X | X | X | X | X | | | X | | |
| | | | | | | X | X | | | | | | | X | X | X | | | | | | | | | | | | | | |
| | 31 | 32 | 33 | 34 | 35 | 36 | 37 | 38 | 39 | 40 | 41 | 42 | 43 | 44 | 45 | 46 | 47 | 48 | 49 | 50 | 51 | 52 | 53 | 54 | 55 | 56 | 57 | 58 | 59 | 60 |

C127

# CIRCUIT ARRANGEMENT

X INDICATES UNAVAILABLE (BLOCKED) CIRCUIT

THIS DRAWING IS A CONTROLLED DOCUMENT.

DIMENSIONS: mm

TOLERANCES UNLESS OTHERWISE SPECIFIED:
0 PLC ±-
1 PLC ±0.5
2 PLC ±0.20
3 PLC ±-
4 PLC ±-
ANGLES ±-

MATERIAL - SEE CALLOUT

FINISH - SEE CALLOUT

DWN J.R.SHUEY 31MAR2000
CHK V.KANE 31MAR2000
APVD J.M.MYER 31MAR2000

PRODUCT SPEC -

APPLICATION SPEC 114-13060

WEIGHT -

TE Connectivity

NAME ASSEMBLY, FEMALE, 60 WAY GET SDM CONNECTOR (SHUNTLESS VERSION)

SIZE A1 | CAGE CODE 00779 | DRAWING NO C-638595 | RESTRICTED TO -

CUSTOMER DRAWING | SCALE 2:1 | SHEET 10 OF 10 | REV BA3

4805 (3/13)

Общество с ограниченной ответственностью «МосЧип» ИНН 7719860671 / КПП 771901001
Адрес: 105318, г.Москва, ул.Щербаковская д.3, офис 1107

**Данный компонент на территории Российской Федерации**

**Вы можете приобрести в компании MosChip.**

Для оперативного оформления запроса Вам необходимо перейти по данной ссылке:

http://moschip.ru/get-element

Вы можете разместить у нас заказ для любого Вашего проекта, будь то серийное производство или разработка единичного прибора.

В нашем ассортименте представлены ведущие мировые производители активных и пассивных электронных компонентов.

Нашей специализацией является поставка электронной компонентной базы двойного назначения, продукции таких производителей как XILINX, Intel (ex.ALTERA), Vicor, Microchip, Texas Instruments, Analog Devices, Mini-Circuits, Amphenol, Glenair.

Сотрудничество с глобальными дистрибьюторами электронных компонентов, предоставляет возможность заказывать и получать с международных складов практически любой перечень компонентов в оптимальные для Вас сроки.

На всех этапах разработки и производства наши партнеры могут получить квалифицированную поддержку опытных инженеров.

Система менеджмента качества компании отвечает требованиям в соответствии с ГОСТ Р ИСО 9001, ГОСТ РВ 0015-002 и ЭС РД 009

**Офис по работе с юридическими лицами:**

105318, г.Москва, ул.Щербаковская д.3, офис 1107, 1118, ДЦ «Щербаковский»

Телефон: +7 495 668-12-70 (многоканальный)

Факс: +7 495 668-12-70 (доб.304)

E-mail: info@moschip.ru

Skype отдела продаж:
moschip.ru
moschip.ru_4
moschip.ru_6
moschip.ru_9