Freescale Semiconductor, Inc.
Data Sheet: Technical Data

Document Number: KL17P64M48SF2
Rev. 5, 04/2015

Kinetis KL17 Microcontroller

48 MHz ARM® Cortex®-M0+ and 32/64 KB Flash

MKL17Z32Vxx4(R)
MKL17Z64Vxx4(R)

The KL17 series is optimized for cost-sensitive and battery-powered applications requiring low-power general purpose connectivity. The product offers:

- Embedded ROM with boot loader for flexible program upgrade
- High accuracy internal voltage and clock reference
- FlexIO to support any standard and customized serial peripheral emulation
- Hardware CRC module
- Down to 46 µA/MHz in very low power run mode and 1.68 µA in stop mode (RAM + RTC retained)

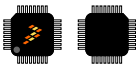

64 LQFP (LH)
10x10x1.6 mm P .5

36 XFBGA (DA)
3.5x3.5x.5 mm P .5

48 & 32 QFN(FT&FM)
7x7x.65 mm P .5(FT)
5x5x.65 mm P .5(FM)

64 MAPBGA (MP)
5x5x1.23 mm P .5 mm

Core Processor

- ARM® Cortex®-M0+ core up to 48 MHz

Memories

- 32/64 KB program flash memory
- 8/16 KB SRAM
- 16 KB ROM with build-in bootloader
- 32-byte backup register

System

- 4-channel asynchronous DMA controller
- Watchdog
- Low-leakage wakeup unit
- Two-pin SWD (serial wire debug) programming and debug interface
- Micro trace buffer
- Bit manipulation engine
- Interrupt controller

Clocks

- 48 MHz high accuracy (up to 0.5%) internal reference clock
- 8 MHz high accuracy (up to 3%) internal reference clock
- 1 kHz reference clock active under all low power modes (except VLLS0)
- 32–40 kHz and 3–32 MHz crystal oscillator

Peripherals

- One UART module supporting ISO7816, operating up to 1.5 Mbit/s
- Two low-power UART modules supporting asynchronous operation in low-power modes
- Two I2C modules supporting up to 1 Mbit/s
- Two 16-bit SPI modules supporting up to 24 Mbit/s for SPI1 and 12 Mbit/s for SPI0
- One FlexIO module supporting emulation of additional UART, SPI, I2C, I2S, PWM and other serial modules, etc.
- One 16-bit ADC module with high accurate internal voltage reference, up to 20 channels and up to 818 ksps at equal to or less than 13-bit mode
- High-speed analog comparator containing a 6-bit DAC for programmable reference input

Timers

- One 6-channel Timer/PWM module
- Two 2-channel Timer/PWM modules
- One low-power timer
- Periodic interrupt timer
- Real time clock

© 2014–2015 Freescale Semiconductor, Inc. All rights reserved.

Operating Characteristics

- Voltage range: 1.71 to 3.6 V
- Flash write voltage range: 1.71 to 3.6 V
- Temperature range: –40 to 105 °C

Packages

- 64 LQFP 10mm x 10mm, 0.5mm pitch, 1.6mm thickness
- 36 XFBGA 3.5mm x 3.5mm, 0.5mm pitch, 0.5mm thickness
- 32 QFN 5mm x 5mm, 0.5mm pitch, 0.65mm thickness
- 64 MAPBGA 5mm x 5mm, 0.5mm pitch, 1.23mm thickness (Package Your Way)
- 48 QFN 7mm x 7mm, 0.5mm pitch, 0.65mm thickness (Package Your Way)

Security and Integrity

- 80-bit unique identification number per chip
- Advanced flash security
- Hardware CRC module

I/O

- Up to 54 general-purpose input/output pins

Low Power

- Down to 46 µA/MHz in very low power run mode
- Down to 1.68 µA in stop mode (RAM + RTC retained)
- Six flexible static modes

NOTE

The 48 QFN and 64 MAPBGA packages supporting MKLx7ZxxVFT4 and MKLx7ZxxVMP4 part numbers for this product are not yet available. However, these packages are included in Package Your Way program for Kinetis MCUs. Visit Freescale.com/KPYW for more details.

Related Resources

Type	Description	Resource
Selector Guide	The Freescale Solution Advisor is a web-based tool that features interactive application wizards and a dynamic product selector.	Solution Advisor
Product Brief	The Product Brief contains concise overview/summary information to enable quick evaluation of a device for design suitability.	KL1xPB[1]
Reference Manual	The Reference Manual contains a comprehensive description of the structure and function (operation) of a device.	KL17P64M48SF2RM[1]
Data Sheet	The Data Sheet includes electrical characteristics and signal connections.	KL17P64M48SF2[1]
Chip Errata	The chip mask set Errata provides additional or corrective information for a particular device mask set.	xN87M[2]
Package drawing	Package dimensions are provided in package drawings.	XFBGA 36-pin: 98ASA00708D LQFP 64-pin: 98ASS23234W QFN 32-pin: 98ASA00615D QFN 48-pin: 98ASA00616D MAPBGA 64-pin: 98ASA00420D

1. To find the associated resource, go to http://www.freescale.com and perform a search using this term.
2. To find the associated resource, go to http://www.freescale.com and perform a search using this term with the “x” replaced by the revision of the device you are using.

Table of Contents

1 Ordering information.... 4
2 Overview.... 4
2.1 System features.... 5
2.1.1 ARM Cortex-M0+ core.... 5
2.1.2 NVIC.... 6
2.1.3 AWIC.... 6
2.1.4 Memory.... 7
2.1.5 Reset and boot.... 7
2.1.6 Clock options.... 9
2.1.7 Security.... 12
2.1.8 Power management.... 12
2.1.9 LLWU.... 14
2.1.10 Debug controller.... 15
2.1.11 COP.... 15
2.2 Peripheral features.... 16
2.2.1 BME.... 16
2.2.2 DMA and DMAMUX.... 16
2.2.3 TPM.... 17
2.2.4 ADC.... 17
2.2.5 VREF.... 18
2.2.6 CMP.... 19
2.2.7 RTC.... 19
2.2.8 PIT.... 20
2.2.9 LPTMR.... 20
2.2.10 CRC.... 21
2.2.11 UART.... 21
2.2.12 LPUART.... 22
2.2.13 SPI.... 22
2.2.14 I2C.... 23
2.2.15 FlexIO.... 23
2.2.16 Port control and GPIO.... 24
3 Memory map.... 26
4 Pinouts.... 27
4.1 KL17 Signal Multiplexing and Pin Assignments.... 27
4.2 Pin properties.... 30
4.3 Module Signal Description Tables.... 33
4.3.1 Core modules.... 33
4.3.2 System modules.... 33
4.3.3 Clock modules.... 34
4.3.4 Analog.... 34
4.3.5 Timer Modules.... 35
4.3.6 Communication interfaces.... 36
4.3.7 Human-machine interfaces (HMI).... 38
4.4 KL17 Family Pinouts.... 38
4.5 Package dimensions.... 43
5 Electrical characteristics.... 51
5.1 Ratings.... 51
5.1.1 Thermal handling ratings.... 51
5.1.2 Moisture handling ratings.... 52
5.1.3 ESD handling ratings.... 52
5.1.4 Voltage and current absolute operating ratings.... 52
5.2 General.... 53
5.2.1 AC electrical characteristics.... 53
5.2.2 Nonswitching electrical specifications.... 53
5.2.3 Switching specifications.... 68
5.2.4 Thermal specifications.... 69
5.3 Peripheral operating requirements and behaviors.... 70
5.3.1 Core modules.... 70
5.3.2 System modules.... 72
5.3.3 Clock modules.... 72
5.3.4 Memories and memory interfaces.... 75
5.3.5 Security and integrity modules.... 77
5.3.6 Analog.... 77
5.4 Timers.... 85
5.5 Communication interfaces.... 85
5.5.1 SPI switching specifications.... 85
5.5.2 Inter-Integrated Circuit Interface (I2C) timing.. 89
5.5.3 UART.... 91
6 Design considerations.... 91
6.1 Hardware design considerations.... 91
6.1.1 Printed circuit board recommendations.... 92
6.1.2 Power delivery system.... 92
6.1.3 Analog design.... 93
6.1.4 Digital design.... 93
6.1.5 Crystal oscillator.... 96
6.2 Software considerations.... 98
7 Part identification.... 99
7.1 Description.... 99
7.2 Format.... 99
7.3 Fields.... 99
7.4 Example.... 100
8 Revision history.... 100

1 Ordering information

The following chips are available for ordering.

Table 1. Ordering information

Product		Memory		Package		IO and ADC channel		
Part number	Marking (Line1/Line2)	Flash (KB)	SRAM (KB)	Pin count	Package	GPIOs	GPIOs (INT/HD)[1]	ADC channels (SE/DP)
MKL17Z64VLH4	MKL17Z64 / VLH4	64	16	64	LQFP	54	54/6	20/4
MKL17Z32VLH4	MKL17Z32 / VLH4	32	8	64	LQFP	54	54/6	20/4
MKL17Z64VDA4	M17M6	64	16	36	XFBGA	32	32/6	15/4
MKL17Z32VDA4	M17M5	32	8	36	XFBGA	32	32/6	15/4
MKL17Z64VFM4	M17M6V	64	16	32	QFN	28	28/6	11/2
MKL17Z32VFM4	M17M5V	32	8	32	QFN	28	28/6	11/2
MKL17Z64VMP4	TBD	64	16	64	MAPBGA	54	54/6	20/4
MKL17Z32VMP4	TBD	32	8	64	MAPBGA	54	54/6	20/4
MKL17Z64VFT4	TBD	64	16	48	QFN	40	40/6	18/3
MKL17Z32VFT4	TBD	32	8	48	QFN	40	40/6	18/3

1. INT: interrupt pin numbers; HD: high drive pin numbers

NOTE

The 48 QFN and 64 MAPBGA packages supporting MKLx7ZxxVFT4 and MKLx7ZxxVMP4 part numbers for this product are not yet available. However, these packages are included in Package Your Way program for Kinetis MCUs. Visit Freescale.com/KPYW for more details.

2 Overview

The following figure shows the system diagram of this device

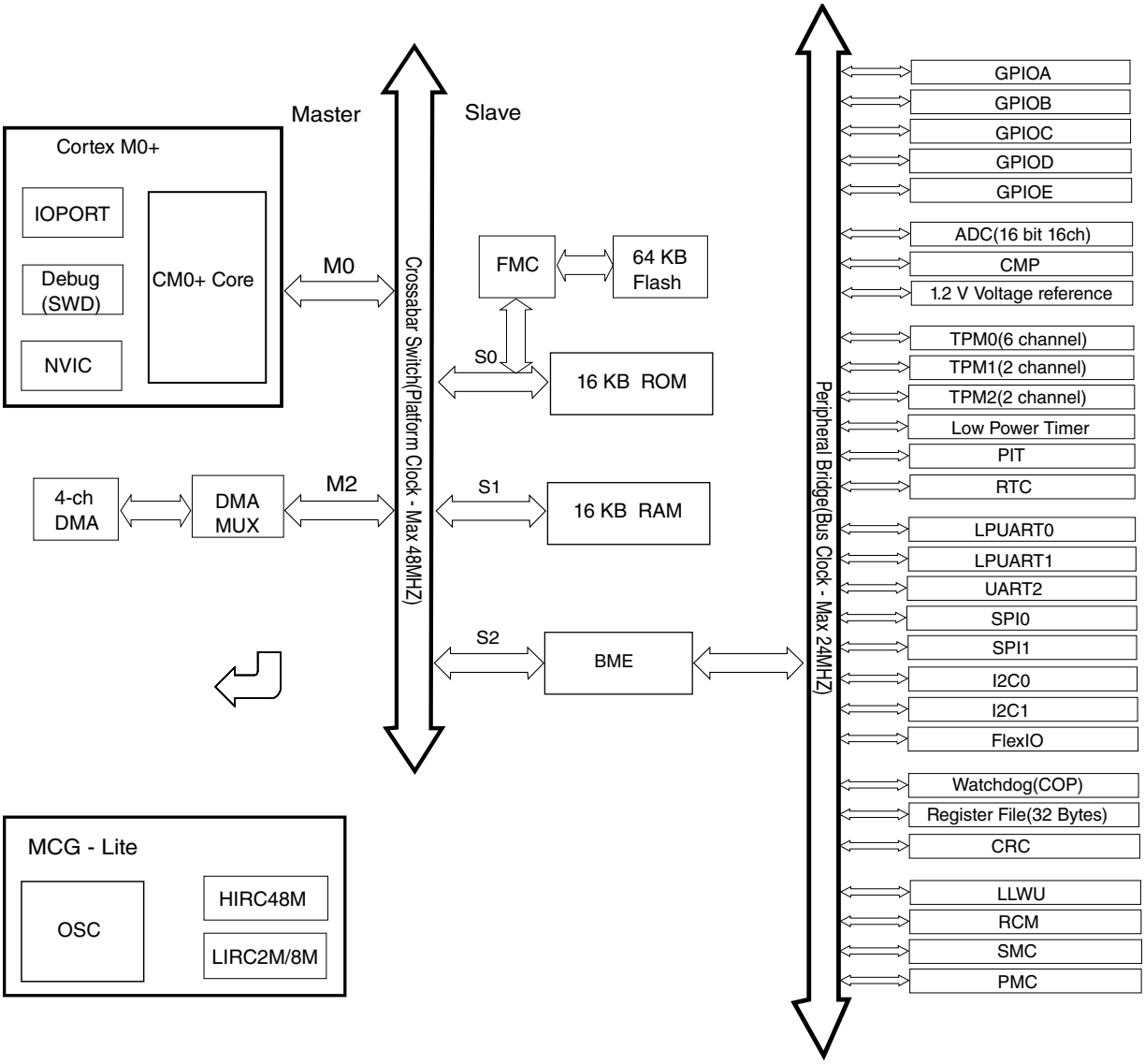

Figure 1. System diagram

The crossbar switch connects bus masters and slaves using a crossbar switch structure. This structure allows up to four bus masters to access different bus slaves simultaneously, while providing arbitration among the bus masters when they access the same slave.

2.1 System features

The following sections describe the high-level system features.

2.1.1 ARM Cortex-M0+ core

The enhanced ARM Cortex M0+ is the member of the Cortex-M series of processors targeting microcontroller cores focused on very cost sensitive, low power applications. It has a single 32-bit AMBA AHB-Lite interface and includes an NVIC component. It also has hardware debug functionality including support for simple program trace capability. The processor supports the ARMv6-M instruction set (Thumb) architecture including all but three 16-bit Thumb opcodes (52 total) plus seven 32-bit instructions. It is upward compatible with other Cortex-M profile processors.

2.1.2 NVIC

The Nested Vectored Interrupt Controller supports nested interrupts and 4 priority levels for interrupts. In the NVIC, each source in the IPR registers contains two bits. It also differs in number of interrupt sources and supports 32 interrupt vectors.

The Cortex-M family uses a number of methods to improve interrupt latency to up to 15 clock cycles for Cortex-M0+. It also can be used to wake the MCU core from Wait and VLPW modes.

2.1.3 AWIC

The asynchronous wake-up interrupt controller (AWIC) is used to detect asynchronous wake-up events in Stop mode and signal to clock control logic to resume system clocking. After clock restarts, the NVIC observes the pending interrupt and performs the normal interrupt or event processing. The AWIC can be used to wake MCU core from Stop and VLPS modes.

Wake-up sources are listed as below:

Table 2. AWIC stop wake-up sources

Wake-up source	Description
Available system resets	$\overline{\text{RESET}}$ pin with filter mode disabled or enabled when LPO is its clock source, COP when its clock source is enabled. COP can also work when its clock source is enabled during Stop mode.
Low-voltage detect	Power management controller—functional in Stop mode
Low-voltage warning	Power management controller—functional in Stop mode
Pin interrupts	Port control module—any enabled pin interrupt is capable of waking the system
ADC	The ADC is functional when using internal clock source or external crystal clock
CMP0	Interrupt in normal or trigger mode

Table continues on the next page...

Table 2. AWIC stop wake-up sources (continued)

Wake-up source	Description
I^2Cx	Address match wakeup
LPUART0 , LPUART1	Any enabled interrupt can be a source as long as the module remains clocked
UART2	Active edge on RXD
RTC	Alarm or seconds interrupt
NMI	$\overline{NMI}$ pin
TPMx	Any enabled interrupt can be a source as long as the module remains clocked
LPTMR	Any enabled interrupt can be a source as long as the module remains clocked
SPIx	Slave mode interrupt
FlexIO	Any enabled interrupt can be a source as long as the module remains clocked

2.1.4 Memory

This device has the following features:

- 8/16 KB of embedded RAM accessible (read/write) at CPU clock speed with 0 wait states.
- The non-volatile memory is divided into two arrays
  - 32/64 KB of embedded program memory
  - 16 KB ROM (built-in bootloader to support UART, I2C, and SPI interfaces)

  The program flash memory contains a 16-byte flash configuration field that stores default protection settings and security information. The page size of program flash is 1 KB.

  The protection setting can protect 32 regions of the program flash memory from unintended erase or program operations.

  The security circuitry prevents unauthorized access to RAM or flash contents from debug port.

- System register file

  This device contains a 32-byte register file that is powered in all power modes.

  Also, it retains contents during low power modes and is reset only during a power-on reset.

2.1.5 Reset and boot

The following table lists all the reset sources supported by this device.

NOTE

In the following table, Y means the specific module, except for the registers, bits or conditions mentioned in the footnote, is reset by the corresponding Reset source. N means the specific module is not reset by the corresponding Reset source.

Table 3. Reset source

Reset sources	Descriptions	Modules								
		PMC	SIM	SMC	RCM	LLWU	Reset pin is negated	RTC	LPTMR	Others
POR reset	Power-on reset (POR)	Y	Y	Y	Y	Y	Y	Y	Y	Y
System resets	Low-voltage detect (LVD)	Y[1]	Y	Y	Y	Y	Y	N	Y	Y
	Low leakage wakeup (LLWU) reset	N	Y[2]	N	Y	N	Y[3]	N	N	Y
	External pin reset ($\overline{\text{RESET}}$)	Y[1]	Y[2]	Y[4]	Y	Y	Y	N	N	Y
	Computer operating properly (COP) watchdog reset	Y[1]	Y[2]	Y[4]	Y[5]	Y	Y	N	N	Y
	Stop mode acknowledge error (SACKERR)	Y[1]	Y[2]	Y[4]	Y[5]	Y	Y	N	N	Y
	Software reset (SW)	Y[1]	Y[2]	Y[4]	Y[5]	Y	Y	N	N	Y
	Lockup reset (LOCKUP)	Y[1]	Y[2]	Y[4]	Y[5]	Y	Y	N	N	Y
	MDM DAP system reset	Y[1]	Y[2]	Y[4]	Y[5]	Y	Y	N	N	Y
Debug reset	Debug reset	Y[1]	Y[2]	Y[4]	Y[5]	Y	Y	N	N	Y

1. Except PMC_LVDSC1[LVDV] and PMC_LVDSC2[LVWV]
2. Except SIM_SOPT1
3. Only if $\overline{\text{RESET}}$ is used to wake from VLLS mode.
4. Except SMC_PMCTRL, SMC_STOPCTRL, SMC_PMSTAT
5. Except RCM_RPFC, RCM_RPFW, RCM_FM

The CM0+ core adds support for a programmable Vector Table Offset Register (VTOR) to relocate the exception vector table after reset. This device supports booting from:

- internal flash
- boot ROM

The Flash Option (FOPT) register in the Flash Memory module (FTFA_FOPT) allows the user to customize the operation of the MCU at boot time. The register contains read-only bits that are loaded from the NVM's option byte in the flash configuration field. Below is boot flow chart for this device.

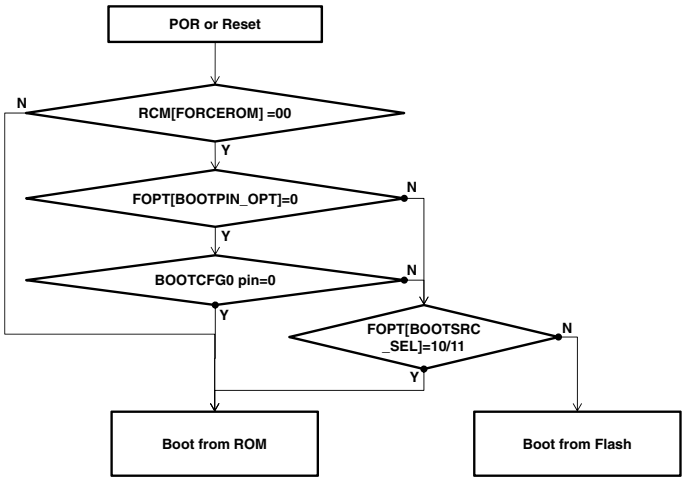

Figure 2. Boot flow chart

The blank chip is default to boot from ROM and remaps the vector table to ROM base address, otherwise, it remaps to flash address.

2.1.6 Clock options

This chip provides a wide range of sources to generate the internal clocks. These sources include internal resistor capacitor (IRC) oscillators, external oscillators, external clock sources, and ceramic resonators. These sources can be configured to provide the required performance and optimize the power consumption.

The IRC oscillators include the high-speed internal resister capacitor (HIRC) oscillator, the low-speed internal resister capacitor (LIRC) oscillator, and the low power oscillator (LPO).

The HIRC oscillator generates a 48 MHz clock.

The LIRC oscillator generates an 8 MHz or 2 MHz clock, and default to 8 MHz system clock on reset. The LIRC oscillator cannot be used in any VLLS modes.

The LPO generates a 1 kHz clock and cannot be used in VLLS0 mode.

The system oscillator supports low frequency crystals (32 kHz to 40 kHz), high frequency crystals (1 MHz to 32 MHz), and ceramic resonators (1 MHz to 32 MHz). An external clock source, DC to 48 MHz, can be used as the system clock through the EXTAL0 pin. The external oscillator also supports a low speed external clock (32.768 kHz) on the RTC_CLKIN pin for use with the RTC.

For more details on the clock operations and configurations, see Reference Manual.

The following figure is a high level block diagram of the clock generation.

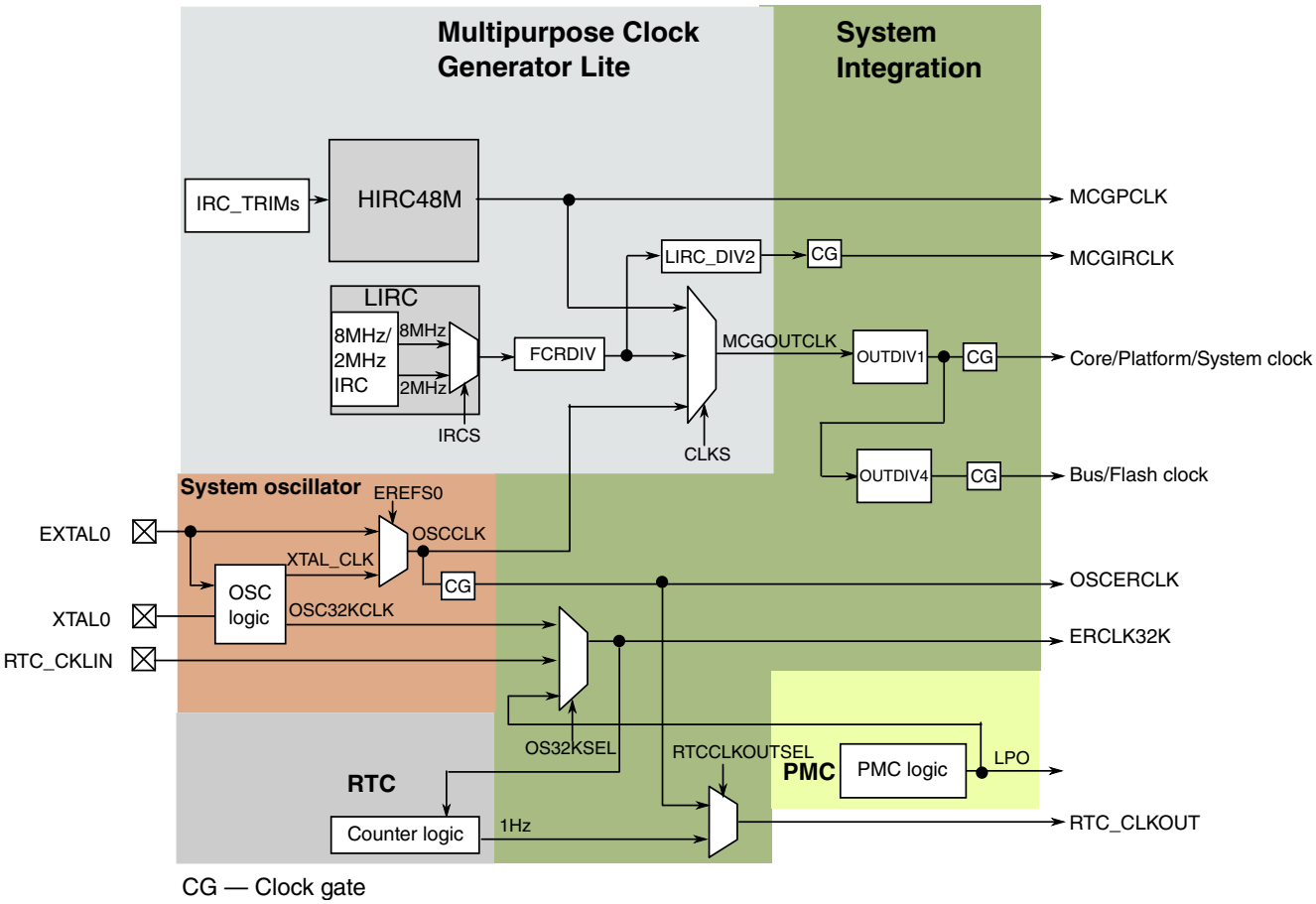

Figure 3. Clock block diagram

In order to provide flexibility, many peripherals can select from multiple clock sources for operation. This enables the peripheral to select a clock that will always be available during operation in various operational modes.

The following table summarizes the clocks associated with each module.

Table 4. Module clocks

Module	Bus interface clock	Internal clocks	I/O interface clocks
Core modules			
ARM Cortex-M0+ core	Platform clock	Core clock	—
NVIC	Platform clock	—	—
DAP	Platform clock	—	SWD_CLK
System modules			
DMA	System clock	—	—
DMA Mux	Bus clock	—	—
Port control	Bus clock	—	—
Crossbar Switch	Platform clock	—	—
Peripheral bridges	System clock	Bus clock	—
LLWU, PMC, SIM, RCM	Bus clock	LPO	—
Mode controller	Bus clock	—	—
MCM	Platform clock	—	—
COP watchdog	Bus clock	LPO, Bus Clock, MCGIRCLK, OSCERCLK	—
CRC	Bus clock	—	—
Clocks			
MCG_Lite	Bus clock	MCGOUTCLK, MCGPCLK, MCGIRCLK, OSCERCLK, ERCLK32K	—
OSC	Bus clock	OSCERCLK	—
Memory and memory interfaces			
Flash Controller	Platform clock	Flash clock	—
Flash memory	Flash clock	—	—
Analog			
ADC	Bus clock	OSCERCLK	—
CMP	Bus clock	—	—
Internal Voltage Reference (VREF)	Bus clock	—	—
Timers			
TPM	Bus clock	TPM clock	TPM_CLKIN0, TPM_CLKIN1
PIT	Bus clock	—	—
LPTMR	Bus clock	LPO, OSCERCLK, MCGPCLK, ERCLK32K	—
RTC	Bus clock	ERCLK32K	RTC_CLKOUT, RTC_CLKIN
Communication interfaces			
SPI0	Bus clock	—	SPI0_SCK
SPI1	System clock	—	SPI1_SCK
I^2C0	System Clock	—	I2C0_SCL

Table continues on the next page...

Table 4. Module clocks (continued)

Module	Bus interface clock	Internal clocks	I/O interface clocks
I^2C1	System Clock	—	I2C1_SCL
LPUART0, LPUART1	Bus clock	LPUART0 clock LPUART1 clock	—
UART2	Bus clock	—	—
FlexIO	Bus clock	FlexIO clock	—
Human-machine interfaces			
GPIO	Platform clock	—	—

2.1.7 Security

Security state can be enabled via programming flash configuration field (0x40e). After enabling device security, the SWD port cannot access the memory resources of the MCU, and ROM boot loader is also limited to access flash and not allowed to read out flash information via ROM boot loader commands.

Access interface	Secure state	Unsecure operation
SWD port	Cannot access memory source by SWD interface	The debugger can write to the Flash Mass Erase in Progress field of the MDM-AP Control register to trigger a mass erase (Erase All Blocks) command
ROM boot loader Interface (UART/I2C/SPI)	Limit access to the flash, cannot read out flash content	Send “FlashEraseAllUnsecureh" command or attempt to unlock flash security using the backdoor key

This device features 80-bit unique identification number, which is programmed in factory and loaded to SIM register after power-on reset.

2.1.8 Power management

The Power Management Controller (PMC) expands upon ARM’s operational modes of Run, Sleep, and Deep Sleep, to provide multiple configurable modes. These modes can be used to optimize current consumption for a wide range of applications. The WFI or WFE instruction invokes a Wait or a Stop mode, depending on the current configuration. For more information on ARM’s operational modes, See the ARM® Cortex User Guide.

The PMC provides Run (Run), and Very Low Power Run (VLPR) configurations in ARM's Run operation mode. In these modes, the MCU core is active and can access all peripherals. The difference between the modes is the maximum clock frequency of the system and therefore the power consumption. The configuration that matches the power versus performance requirements of the application can be selected.

The PMC provides Wait (Wait) and Very Low Power Wait (VLPW) configurations in ARM's Sleep operation mode. In these modes, even though the MCU core is inactive, all of the peripherals can be enabled and operate as programmed. The difference between the modes is the maximum clock frequency of the system and therefore the power consumption.

The PMC provides Stop (Stop), Very Low Power Stop (VLPS), Low Leakage Stop (LLS), and Very Low Leakage Stop (VLLS) configurations in ARM's Deep Sleep operational mode. In these modes, the MCU core and most of the peripherals are disabled. Depending on the requirements of the application, different portions of the analog, logic, and memory can be retained or disabled to conserve power.

The Nested Vectored Interrupt Controller (NVIC), the Asynchronous Wake-up Interrupt Controller (AWIC), and the Low Leakage Wake-Up Controller (LLWU) are used to wake up the MCU from low power states. The NVIC is used to wake up the MCU core from WAIT and VLPW modes. The AWIC is used to wake up the MCU core from STOP and VLPS modes. The LLWU is used to wake up the MCU core from LLS and VLLSx modes.

For additional information regarding operational modes, power management, the NVIC, AWIC, or the LLWU, please refer to the Reference Manual.

The following table provides information about the state of the peripherals in the various operational modes and the modules that can wake MCU from low power modes.

Table 6. Peripherals states in different operational modes

Core mode	Device mode	Descriptions
Run mode	Run	In Run mode, all device modules are operational.
	Very Low Power Run	In VLPR mode, all device modules are operational at a reduced frequency except the Low Voltage Detect (LVD) monitor, which is disabled.
Sleep mode	Wait	In Wait mode, all peripheral modules are operational. The MCU core is placed into Sleep mode.
	Very Low Power Wait	In VLPW mode, all peripheral modules are operational at a reduced frequency except the Low Voltage Detect (LVD) monitor, which is disabled. The MCU core is placed into Sleep mode.

Table continues on the next page...

Table 6. Peripherals states in different operational modes (continued)

Core mode	Device mode	Descriptions
Deep sleep	Stop	In Stop mode, most peripheral clocks are disabled and placed in a static state. Stop mode retains all registers and SRAMs while maintaining Low Voltage Detection protection. In Stop mode, the ADC, CMP, LPTimer, RTC, and pin interrupts are operational. The NVIC is disabled, but the AWIC can be used to wake up from an interrupt.
	Very Low Power Stop	In VLPS mode, the contents of the SRAM are retained. The CMP (low speed), ADC, OSC, RTC, LPTMR, TPM, FlexIO, LPUART, and DMA are operational, LVD and NVIC are disabled, AWIC is used to wake up from interrupt.
	Low Leakage Stop	In LLS mode, the contents of the SRAM and the 32-byte system register file are retained. The CMP (low speed), LLWU, LPTMR, and RTC are operational. The ADC, CRC, DMA, FlexIO, I2C, LPUART, MCG-Lite, NVIC, PIT, SPI, TPM, UART, and COP are static, but retain their programming. The GPIO, and VREF are static, retain their programming, and continue to drive their previous values.
	Very Low Leakage Stop	In VLLS modes, most peripherals are powered off and will resume operation from their reset state when the device wakes up. The LLWU, LPTMR, and RTC are operational in all VLLS modes. In VLLS3, the contents of the SRAM and the 32-byte system register file are retained. The CMP (low speed), and PMC are operational. The GPIO, and VREF are not operational but continue driving. In VLLS1, the contents of the 32-byte system register file are retained. The CMP (low speed), and PMC are operational. The GPIO, and VREF are not operational but continue driving. In VLLS0, the contents of the 32-byte system register file are retained. The PMC is operational. The GPIO is not operational but continues driving. The POR detection circuit can be enabled or disabled.

2.1.9 LLWU

The LLWU module is used to wake MCU from low leakage power mode (LLS and VLLSx) and functional only on entry into a low-leakage power mode. After recovery from LLS, the LLWU is immediately disabled. After recovery from VLLSx, the LLWU continues to detect wake-up events until the user has acknowledged the wake-up event.

This device uses 8 external wakeup pin inputs and 4 internal modules as wakeup sources to the LLWU module.

The following is internal peripheral and external pin inputs as wakeup sources to the LLWU module.

Table 7. Wakeup source

LLWU pin	Module source or pin name
LLWU_P5	PTB0
LLWU_P6	PTC1
LLWU_P7	PTC3
LLWU_P8	PTC4
LLWU_P9	PTC5
LLWU_P10	PTC6
LLWU_P14	PTD4
LLWU_P15	PTD6
LLWU_M0IF	LPTMR0
LLWU_M1IF	CMP0
LLWU_M2IF	Reserved
LLWU_M3IF	Reserved
LLWU_M4IF	Reserved
LLWU_M5IF	RTC alarm
LLWU_M6IF	Reserved
LLWU_M7IF	RTC seconds

2.1.10 Debug controller

This device supports standard ARM 2-pin SWD debug port. It provides register and memory accessibility from the external debugger interface, basic run/halt control plus 2 breakpoints and 2 watchpoints.

It also supports trace function with the Micro Trace Buffer (MTB), which provides a simple execution trace capability for the Cortex-M0+ processor.

2.1.11 COP

The COP monitors internal system operation and forces a reset in case of failure. It can run from bus clock, LPO, 8/2 MHz internal oscillator or external crystal oscillator. Optional window mode can detect deviations in program flow or system frequency.

The COP has the following features:

- Support multiple clock input, 1 kHz clock(LPO), bus clock, 8/2 MHz internal reference clock, external crystal oscillator
- Can work in Stop/VLPS and Debug mode

- Configurable for short and long timeout values, the longest timeout is up to 262 seconds
- Support window mode

2.2 Peripheral features

The following sections describe the features of each peripherals of the chip.

2.2.1 BME

The Bit Manipulation Engine (BME) provides hardware support for atomic read-modify-write memory operations to the peripheral address space in Cortex-M0+ based microcontrollers. It reduces up to 30% of the code size and up to 9% of the cycles for bit-oriented operations to peripheral registers.

The BME supports unsigned bit field extract, load-and-set 1-bit, load-and-clear 1-bit, bit field insert, logical AND/OR/XOR operations with byte, halfword or word-sized data type.

2.2.2 DMA and DMAMUX

The DMA controller module enables fast transfers of data, which provides an efficient way to move blocks of data with minimal processor interaction. The DMA controller in this device implements four channels which can be routed from up to 63 DMA request sources through DMA MUX module. Some of the peripheral request sources have asynchronous DMA capability which can be used to wake MCU from Stop mode. The peripherals which have such capability include LPUART0, LPUART1, FlexIO, TPM0-TPM2, ADC0, CMP0, PORTA-PORTE. The DMA channel 0 and 1 can be periodically triggered by PIT via DMA MUX.

Main features are listed below:

- Dual-address transfers via 32-bit master connection to the system bus and data transfers in 8-, 16-, or 32-bit blocks
- Supports programmable source and destination address and transfer size, optional modulo addressing from 16 bytes to 256 KB
- Automatic updates of source and destination addresses

- Auto-alignment feature for source or destination accesses allows block transfers to occur at the optimal size based on the address, byte count,and programmed size, which significantly improves the speed of block transfer
- Automatic single or double channel linking allows the current DMA channel to automatically trigger a DMA request to the linked channels without CPU intervention

For more information on asynchronous DMA, see AN4631.

2.2.3 TPM

This device contains three low power TPM modules (TPM). All TPM modules are functional in Stop/VLPS mode if the clock source is enabled.

The TPM features include:

- TPM clock mode is selectable from external clock input or internal clock source, HIRC48M clock, external crystal input clock or LIRC2M/8M clock.
- Prescaler divide-by 1, 2, 4, 8, 16, 32, 64, or 128
- TPM includes a 16-bit counter
- Includes 6 channels that can be configured for input capture, output compare, edge-aligned PWM mode, or center-aligned PWM mode
- Support the generation of an interrupt and/or DMA request per channel or counter overflow
- Support selectable trigger input to optionally reset or cause the counter to start or stop incrementing
- Support the generation of hardware triggers when the counter overflows and per channel

2.2.4 ADC

this device contains one ADC module. This ADC module supports hardware triggers from TPM, LPTMR, PIT, RTC, external trigger pin and CMP output. It supports wakeup of MCU in low power mode when using internal clock source or external crystal clock.

ADC module has the following features:

- Linear successive approximation algorithm with up to 16-bit resolution
- Up to four pairs of differential and 17 single-ended external analog inputs
- Support selectable 16-bit, 13-bit, 11-bit, and 9-bit differential output mode, or 16-bit, 12-bit, 10-bit, and 8-bit single-ended output modes

- Single or continuous conversion
- Configurable sample time and conversion speed/power
- Selectable clock source up to four
- Operation in low-power modes for lower noise
- Asynchronous clock source for lower noise operation with option to output the clock
- Selectable hardware conversion trigger
- Automatic compare with interrupt for less-than, greater-than or equal-to, within range, or out-of-range, programmable value
- Temperature sensor
- Hardware average function up to 32x
- Selectable voltage reference: external or alternate
- Self-Calibration mode

2.2.4.1 Temperature sensor

This device contains one temperature sensor internally connected to the input channel of AD26, see Table 55 for details of the linearity factor.

The sensor must be calibrated to gain good accuracy, so as to provide good linearity, see also AN3031. We recommend to use internal reference voltage as ADC reference with long sample time.

2.2.5 VREF

The Voltage Reference (VREF) can supply an accurate voltage output (1.2V typically) trimmed in 0.5 mV steps. It can be used in applications to provide a reference voltage to external devices or used internally as a reference to analog peripherals such as the ADC or CMP.

The VREF supports the following programmable buffer modes:

- Bandgap on only, used for stabilization and startup
- High power buffer mode
- Low-power buffer mode
- Buffer disabled

The VREF voltage output signal, bonded on VREFH for 48 QFN, 64 LQFP and 64 MAPBGA packages and on PTE30 for 32 QFN and 36 XFBGA packages, can be used by both internal and external peripherals in low and high power buffer mode. A 100 nF capacitor must always be connected between this pin and VSSA if the VREF is used. This capacitor must be as close to VREFO pin as possible.

2.2.6 CMP

The device contains one high-speed comparator and two 8-input multiplexers for both the inverting and non-inverting inputs of the comparator. Each CMP input channel connects to both muxes.

The CMP includes one 6-bit DAC, which provides a selectable voltage reference for various user application cases. Besides, the CMP also has several module-to-module interconnects in order to facilitate ADC triggering, TPM triggering, and interfaces.

The CMP has the following features:

- Inputs may range from rail to rail
- Programmable hysteresis control
- Selectable interrupt on rising-edge, falling-edge, or both rising or falling edges of the comparator output
- Selectable inversion on comparator output
- Capability to produce a wide range of outputs such as sampled, digitally filtered
- External hysteresis can be used at the same time that the output filter is used for internal functions
- Two software selectable performance levels: shorter propagation delay at the expense of higher power and Low power with longer propagation delay
- DMA transfer support
- Functional in all modes of operation except in VLLS0 mode
- The filter functions are not available in Stop, VLPS, LLS, or VLLSx modes
- Integrated 6-bit DAC with selectable supply reference source and can be power down to conserve power
- Two 8-to-1 channel mux

2.2.7 RTC

The RTC is an always powered-on block that remains active in all low power modes. The time counter within the RTC is clocked by a 32.768 kHz clock sourced from an external crystal using the oscillator or clock directly from RTC_CLKIN pin.

RTC is reset on power-on reset, and a software reset bit in RTC can also initialize all RTC registers.

The RTC module has the following features

- 32-bit seconds counter with roll-over protection and 32-bit alarm

- 16-bit prescaler with compensation that can correct errors between 0.12 ppm and 3906 ppm
- Register write protection with register lock mechanism
- 1 Hz square wave or second pulse output with optional interrupt

2.2.8 PIT

The Periodic Interrupt Timer (PIT) is used to generate periodic interrupt to the CPU. It has two independent channels and each channel has a 32-bit counter. Both channels can be chained together to form a 64-bit counter.

Channel 0 can be used to periodically trigger DMA channel 0, and channel 1 can be used to periodically trigger DMA channel 1. Either channel can be programmed as an ADC trigger source, or TPM trigger source. Channel 0 can be programmed to trigger DAC.

The PIT module has the following features:
- Each 32-bit timers is able to generate DMA trigger
- Each 32-bit timers is able to generate timeout interrupts
- Two timers can be cascaded to form a 64-bit timer
- Each timer can be programmed as ADC/TPM trigger source
- Timer 0 is able to trigger DAC

2.2.9 LPTMR

The low-power timer (LPTMR) can be configured to operate as a time counter with optional prescaler, or as a pulse counter with optional glitch filter, across all power modes, including the low-leakage modes. It can also continue operating through most system reset events, allowing it to be used as a time of day counter.

The LPTMR module has the following features:
- 16-bit time counter or pulse counter with compare
  - Optional interrupt can generate asynchronous wakeup from any low-power mode
  - Hardware trigger output
  - Counter supports free-running mode or reset on compare
- Configurable clock source for prescaler/glitch filter
- Configurable input source for pulse counter

2.2.10 CRC

This device contains one cyclic redundancy check (CRC) module which can generate 16/32-bit CRC code for error detection.

The CRC module provides a programmable polynomial, WAS, and other parameters required to implement a 16-bit or 32-bit CRC standard.

The CRC module has the following features:

- Hardware CRC generator circuit using a 16-bit or 32-bit programmable shift register
- Programmable initial seed value and polynomial
- Option to transpose input data or output data (the CRC result) bitwise or bytewise.
- Option for inversion of final CRC result
- 32-bit CPU register programming interface

2.2.11 UART

This device contains a basic universal asynchronous receiver/transmitter (UART) module with DMA function supported. Generally, this module is used in RS-232, RS-485, and other communications and supports LIN slave operation and ISO7816.

The UART module has the following features:

- Full-duplex operation
- 13-bit baud rate selection with /32 fractional divide, based on the module clock frequency
- Programmable 8-bit or 9-bit data format
- Programmable transmitter output polarity
- Programmable receive input polarity
- Up to 14-bit break character transmission.
- 11-bit break character detection option
- Two receiver wakeup methods with idle line or address mark wakeup
- Address match feature in the receiver to reduce address mark wakeup ISR overhead
- Ability to select MSB or LSB to be first bit on wire
- Support for ISO 7816 protocol to interface with SIM cards and smart cards
- Receiver framing error detection
- Hardware parity generation and checking

- 1/16 bit-time noise detection
- DMA interface

2.2.12 LPUART

This product contains two Low-Power UART modules, both of their clock sources are selectable from IRC48M, IRC8M/2M or external crystal clock, and can work in Stop and VLPS modes. They also support 4× to 32× data oversampling rate to meet different applications.

The LPUART module has the following features:

- Programmable baud rates (13-bit modulo divider) with configurable oversampling ratio from 4× to 32×
- Transmit and receive baud rate can operate asynchronous to the bus clock and can be configured independently of the bus clock frequency, support operation in Stop mode
- Interrupt, DMA or polled operation
- Hardware parity generation and checking
- Programmable 8-bit, 9-bit or 10-bit character length
- Programmable 1-bit or 2-bit stop bits
- Three receiver wakeup methods
    - Idle line wakeup
    - Address mark wakeup
    - Receive data match
- Automatic address matching to reduce ISR overhead:
    - Address mark matching
    - Idle line address matching
    - Address match start, address match end
- Optional 13-bit break character generation / 11-bit break character detection
- Configurable idle length detection supporting 1, 2, 4, 8, 16, 32, 64 or 128 idle characters
- Selectable transmitter output and receiver input polarity

2.2.13 SPI

This device contains two SPI modules. SPI modules support 8-bit and 16-bit modes. FIFO function is available only on SPI1 module.

The SPI modules have the following features:

- Full-duplex or single-wire bidirectional mode
- Programmable transmit bit rate
- Double-buffered transmit and receive data register
- Serial clock phase and polarity options
- Slave select output
- Mode fault error flag with CPU interrupt capability
- Control of SPI operation during wait mode
- Selectable MSB-first or LSB-first shifting
- Programmable 8- or 16-bit data transmission length
- Receive data buffer hardware match feature
- 64-bit FIFO mode for high speed/large amounts of data transfers
- Support DMA

2.2.14 I2C

This device contains two I2C modules, which support up to 1 Mbits/s by dual buffer features, and address match to wake MCU from the low power mode.

I2C modules support DMA transfer, and the interrupt condition can trigger DMA request when DMA function is enabled.

The I2C modules have the following features:

- Support for system management bus (SMBus) Specification, version 2
- Software programmable for one of 64 different serial clock frequencies
- Software-selectable acknowledge bit
- Arbitration-lost interrupt with automatic mode switching from master to slave
- Calling address identification interrupt
- START and STOP signal generation and detection
- Repeated START signal generation and detection
- Acknowledge bit generation and detection
- Bus busy detection
- General call recognition
- 10-bit address extension
- Programmable input glitch filter
- Low power mode wakeup on slave address match
- Range slave address support
- DMA support
- Double buffering support to achieve higher baud rate

2.2.15 FlexIO

The FlexIO is a highly configurable module providing a wide range of protocols including, but not limited to UART, I2C, SPI, I2S, Camera IF, LCD RGB, PWM/ Waveform generation. The module supports programmable baud rates independent of bus clock frequency, with automatic start/stop bit generation.

The FlexIO module has the following features:

- Functional in VLPR/VLPW/Stop/VLPS mode provided the clock it is using remains enabled
- Four 32-bit double buffered shift registers with transmit, receive, and data match modes, and continuous data transfer
- The timing of the shifter' shift, load and store events are controlled by the highly flexible 16-bit timer assigned to the shifter
- Two or more shifter can be concatenated to support large data transfer sizes
- Each 16-bit timers operates independently, supports for reset, enable and disable on a variety of internal or external trigger conditions with programmable trigger polarity
- Flexible pin configuration supporting output disabled, open drain, bidirectional output data and output mode
- Supports interrupt, DMA or polled transmit/receive operation

2.2.16 Port control and GPIO

The Port Control and Interrupt (PORT) module provides support for port control, digital filtering, and external interrupt functions. The GPIO data direction and output data registers control the direction and output data of each pin when the pin is configured for the GPIO function. The GPIO input data register displays the logic value on each pin when the pin is configured for any digital function, provided the corresponding Port Control and Interrupt module for that pin is enabled.

The following figure shows the basic I/O pad structure. This diagram applies to all I/O pins except PTA20/RESET_b and those configured as pseudo open-drain outputs. PTA20/RESET_b is a true open-drain pin without p-channel output driver or diode to the ESD bus. Pseudo open-drain pins have the p-channel output driver disabled when configured for open-drain operation. None of the I/O pins, including open-drain and pseudo open-drain pins, are allowed to go above VDD.

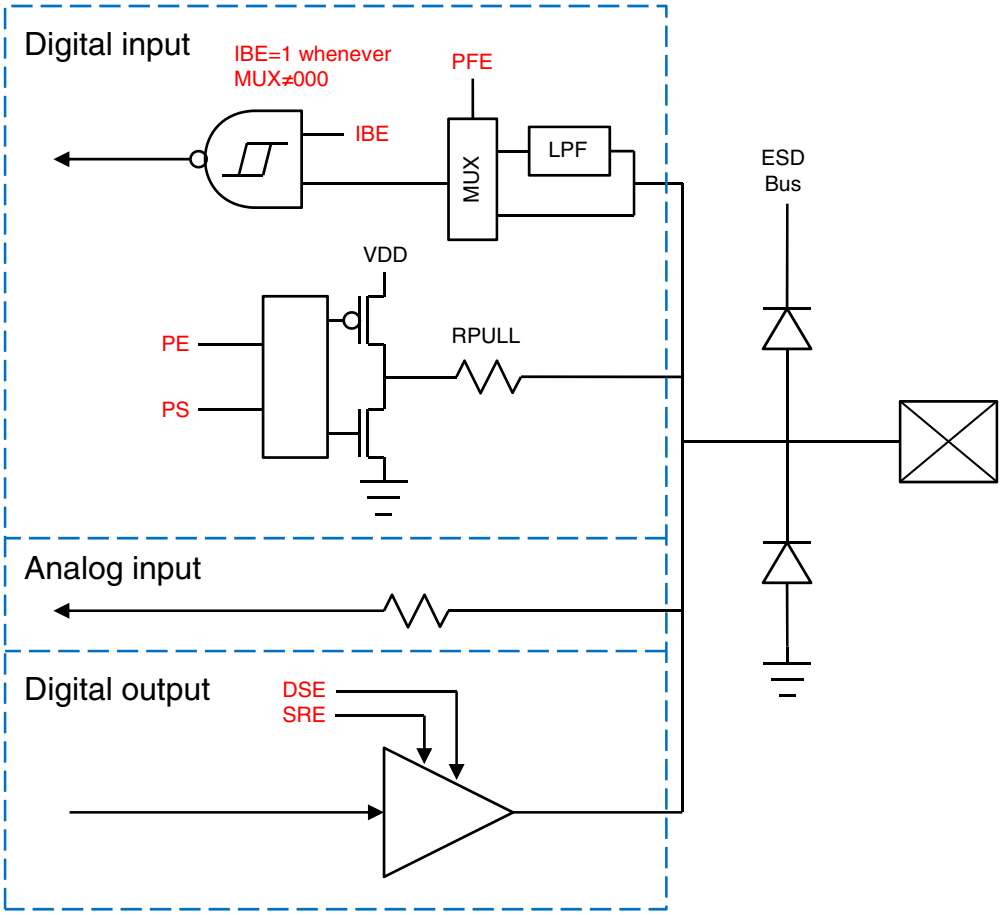

Figure 4. I/O simplified block diagram

The PORT module has the following features:

- all PIN support interrupt enable .
- Configurable edge(rising,falling,both) or level sensitive interrupt type
- Support DMA request
- Asynchronous wake-up in low-power modes
- Configurable pullup, pulldown, and pull-disable on select pins
- Configurable high and low drive strength on selected pins
- Configurable fast and slow slew rates on selected pins
- Configurable passive filter on selected pins
- Individual mux control field supporting analog or pin disabled, GPIO, and up to chip-specific digital functions
- Pad configuration fields are functional in all digital pin muxing modes.

The GPIO module has the following features:

- Port Data Input register visible in all digital pin-multiplexing modes
- Port Data Output register with corresponding set/clear/toggle registers

- Port Data Direction register
- GPIO support single-cycle access via fast GPIO.

3 Memory map

This device contains various memories and memory-mapped peripherals which are located in a 4 GB memory space. The following figure shows the system memory and peripheral locations

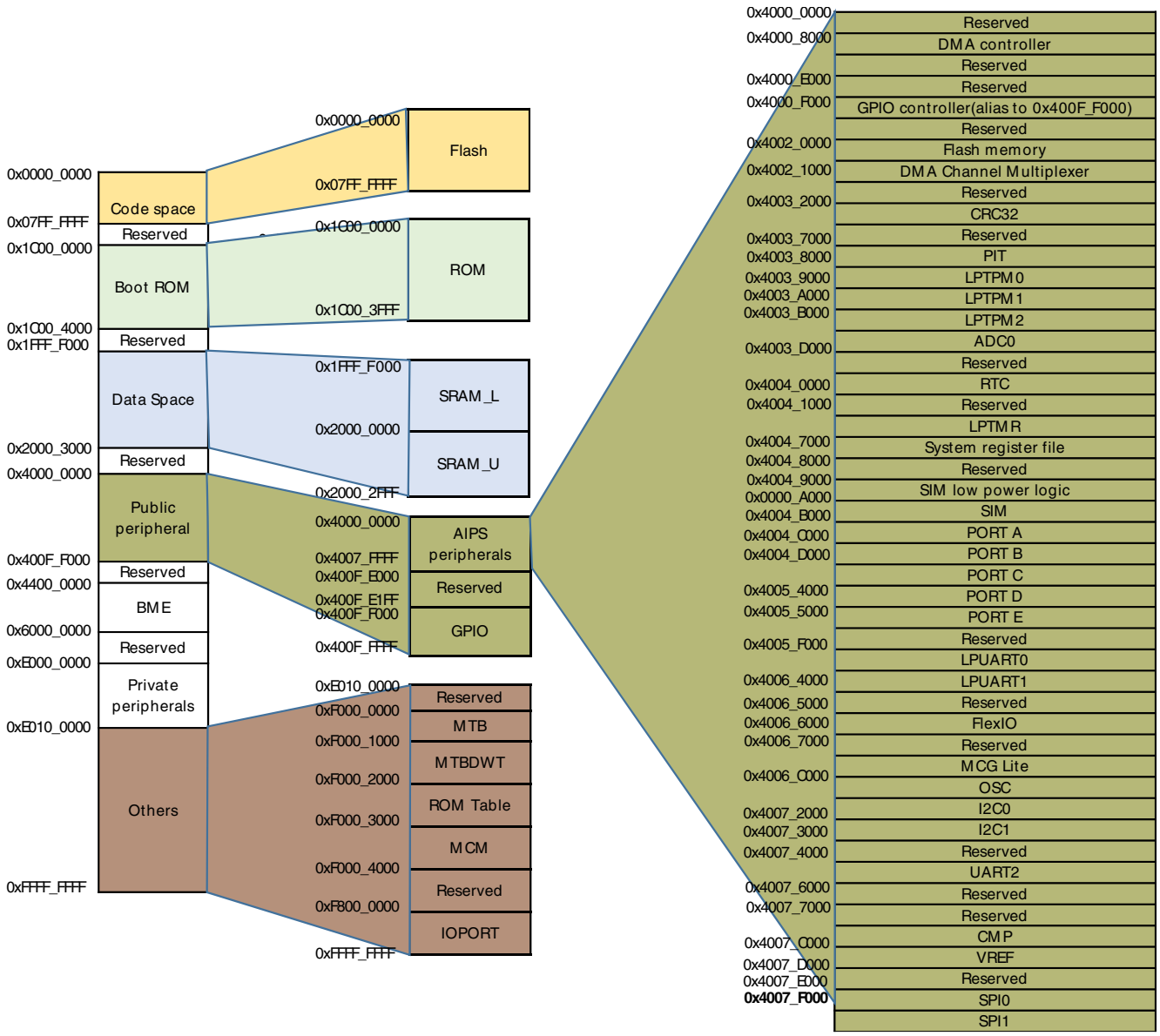

Figure 5. Memory map

4 Pinouts

4.1 KL17 Signal Multiplexing and Pin Assignments

The following table shows the signals available on each pin and the locations of these pins on the devices supported by this document. The Port Control Module is responsible for selecting which ALT functionality is available on each pin.

NOTE

The 48 QFN and 64 MAPBGA packages for this product are not yet available. However, these packages are included in Package Your Way program for Kinetis MCUs. Visit freescale.com/KPYW for more details.

64 LQFP	36 XFBGA	32 QFN	48 QFN	64 MAPBGA	Pin Name	Default	ALT0	ALT1	ALT2	ALT3	ALT4	ALT5	ALT6	ALT7
—	F2	9	—	—	VREF0	VREF0_B	VREF0_B							
—	—	—	—	C5	NC	NC	NC							
1	A1	1	—	A1	PTE0	DISABLED		PTE0/ CLKOUT32K	SPI1_MISO	LPUART1_TX	RTC_CLKOUT	CMP0_OUT	I2C1_SDA	
2	B1	2	—	B1	PTE1	DISABLED		PTE1	SPI1_MOSI	LPUART1_RX		SPI1_MISO	I2C1_SCL	
3	—	—	1	—	VDD	VDD	VDD							
4	C4	—	2	C4	VSS	VSS	VSS							
5	C2	3	3	E1	PTE16	ADC0_DP1/ ADC0_SE1	ADC0_DP1/ ADC0_SE1	PTE16	SPI0_PCS0	UART2_TX	TPM_CLKIN0		FXIO0_D0	
6	C1	4	4	D1	PTE17	ADC0_DM1/ ADC0_SE5a	ADC0_DM1/ ADC0_SE5a	PTE17	SPI0_SCK	UART2_RX	TPM_CLKIN1	LPTMR0_ALT3	FXIO0_D1	
7	D1	5	5	E2	PTE18	ADC0_DP2/ ADC0_SE2	ADC0_DP2/ ADC0_SE2	PTE18	SPI0_MOSI		I2C0_SDA	SPI0_MISO	FXIO0_D2	
8	D2	6	6	D2	PTE19	ADC0_DM2/ ADC0_SE6a	ADC0_DM2/ ADC0_SE6a	PTE19	SPI0_MISO		I2C0_SCL	SPI0_MOSI	FXIO0_D3	
9	E3	—	7	G1	PTE20	ADC0_DP0/ ADC0_SE0	ADC0_DP0/ ADC0_SE0	PTE20		TPM1_CH0	LPUART0_TX		FXIO0_D4	
10	E2	—	8	F1	PTE21	ADC0_DM0/	ADC0_DM0/	PTE21		TPM1_CH1	LPUART0_RX		FXIO0_D5	

64 LQFP	36 XFB GA	32 QFN	48 QFN	64 MAP BGA	Pin Name	Default	ALT0	ALT1	ALT2	ALT3	ALT4	ALT5	ALT6	ALT7
						ADC0_ SE4a	ADC0_ SE4a							
11	E1	—	—	G2	PTE22	ADC0_DP3/ ADC0_SE3	ADC0_DP3/ ADC0_SE3	PTE22		TPM2_CH0	UART2_TX		FXIO0_D6	
12	F1	—	—	F2	PTE23	ADC0_ DM3/ ADC0_ SE7a	ADC0_ DM3/ ADC0_ SE7a	PTE23		TPM2_CH1	UART2_RX		FXIO0_D7	
13	D3	7	9	F4	VDDA	VDDA	VDDA							
14	D3	7	10	G4	VREFH	VREFH	VREFH							
14	—	—	10	G4	VREFO	VREFO_A	VREFO_A							
15	D4	8	11	G3	VREFL	VREFL	VREFL							
16	D4	8	12	F3	VSSA	VSSA	VSSA							
17	—	—	13	H1	PTE29	CMP0_IN5/ ADC0_ SE4b	CMP0_IN5/ ADC0_ SE4b	PTE29		TPM0_CH2	TPM_ CLKIN0			
18	F2	9	14	H2	PTE30	ADC0_ SE23/ CMP0_IN4	ADC0_ SE23/ CMP0_IN4	PTE30		TPM0_CH3	TPM_ CLKIN1	LPUART1_ TX	LPTMR0_ ALT1	
19	—	—	—	H3	PTE31	DISABLED		PTE31		TPM0_CH4				
20	—	—	15	H4	PTE24	DISABLED		PTE24		TPM0_CH0		I2C0_SCL		
21	—	—	16	H5	PTE25	DISABLED		PTE25		TPM0_CH1		I2C0_SDA		
22	F3	10	17	D3	PTA0	SWD_CLK		PTA0		TPM0_CH5				SWD_CLK
23	F4	11	18	D4	PTA1	DISABLED		PTA1	LPUART0_ RX	TPM2_CH0				
24	E4	12	19	E5	PTA2	DISABLED		PTA2	LPUART0_ TX	TPM2_CH1				
25	E5	13	20	D5	PTA3	SWD_DIO		PTA3	I2C1_SCL	TPM0_CH0				SWD_DIO
26	F5	14	21	G5	PTA4	NMI_b		PTA4	I2C1_SDA	TPM0_CH1				NMI_b
27	—	—	—	F5	PTA5	DISABLED		PTA5		TPM0_CH2				
28	—	—	—	H6	PTA12	DISABLED		PTA12		TPM1_CH0				
29	—	—	—	G6	PTA13	DISABLED		PTA13		TPM1_CH1				
30	C3	15	22	G7	VDD	VDD	VDD							
31	C4	16	23	H7	VSS	VSS	VSS							
32	F6	17	24	H8	PTA18	EXTAL0	EXTAL0	PTA18		LPUART1_ RX	TPM_ CLKIN0			
33	E6	18	25	G8	PTA19	XTAL0	XTAL0	PTA19		LPUART1_ TX	TPM_ CLKIN1		LPTMR0_ ALT1	
34	D5	19	26	F8	PTA20	RESET_b		PTA20						RESET_b
35	D6	20	27	F7	PTB0/ LLWU_P5	ADC0_SE8	ADC0_SE8	PTB0/ LLWU_P5	I2C0_SCL	TPM1_CH0	SPI1_MOSI	SPI1_MISO		
36	C6	21	28	F6	PTB1	ADC0_SE9	ADC0_SE9	PTB1	I2C0_SDA	TPM1_CH1	SPI1_MISO	SPI1_MOSI		

64 LQFP	36 XFB GA	32 QFN	48 QFN	64 MAP BGA	Pin Name	Default	ALT0	ALT1	ALT2	ALT3	ALT4	ALT5	ALT6	ALT7
37	—	—	29	E7	PTB2	ADC0_ SE12	ADC0_ SE12	PTB2	I2C0_SCL	TPM2_CH0				
38	—	—	30	E8	PTB3	ADC0_ SE13	ADC0_ SE13	PTB3	I2C0_SDA	TPM2_CH1				
39	—	—	31	E6	PTB16	DISABLED		PTB16	SPI1_MOSI	LPUART0_ RX	TPM_ CLKIN0	SPI1_MISO		
40	—	—	32	D7	PTB17	DISABLED		PTB17	SPI1_MISO	LPUART0_ TX	TPM_ CLKIN1	SPI1_MOSI		
41	—	—	—	D6	PTB18	DISABLED		PTB18		TPM2_CH0				
42	—	—	—	C7	PTB19	DISABLED		PTB19		TPM2_CH1				
43	—	—	33	D8	PTC0	ADC0_ SE14	ADC0_ SE14	PTC0		EXTRG_IN		CMP0_OUT		
44	C5	22	34	C6	PTC1/ LLWU_P6/ RTC_CLKIN	ADC0_ SE15	ADC0_ SE15	PTC1/ LLWU_P6/ RTC_CLKIN	I2C1_SCL		TPM0_CH0			
45	B6	23	35	B7	PTC2	ADC0_ SE11	ADC0_ SE11	PTC2	I2C1_SDA		TPM0_CH1			
46	B5	24	36	C8	PTC3/ LLWU_P7	DISABLED		PTC3/ LLWU_P7	SPI1_SCK	LPUART1_ RX	TPM0_CH2	CLKOUT		
47	—	—	—	E3	VSS	VSS	VSS							
48	—	—	—	E4	VDD	VDD	VDD							
49	A6	25	37	B8	PTC4/ LLWU_P8	DISABLED		PTC4/ LLWU_P8	SPI0_PCS0	LPUART1_ TX	TPM0_CH3	SPI1_PCS0		
50	A5	26	38	A8	PTC5/ LLWU_P9	DISABLED		PTC5/ LLWU_P9	SPI0_SCK	LPTMR0_ ALT2			CMP0_OUT	
51	B4	27	39	A7	PTC6/ LLWU_P10	CMP0_IN0	CMP0_IN0	PTC6/ LLWU_P10	SPI0_MOSI	EXTRG_IN		SPI0_MISO		
52	A4	28	40	B6	PTC7	CMP0_IN1	CMP0_IN1	PTC7	SPI0_MISO			SPI0_MOSI		
53	—	—	—	A6	PTC8	CMP0_IN2	CMP0_IN2	PTC8	I2C0_SCL	TPM0_CH4				
54	—	—	—	B5	PTC9	CMP0_IN3	CMP0_IN3	PTC9	I2C0_SDA	TPM0_CH5				
55	—	—	—	B4	PTC10	DISABLED		PTC10	I2C1_SCL					
56	—	—	—	A5	PTC11	DISABLED		PTC11	I2C1_SDA					
57	—	—	41	C3	PTD0	DISABLED		PTD0	SPI0_PCS0		TPM0_CH0		FXIO0_D0	
58	—	—	42	A4	PTD1	ADC0_ SE5b	ADC0_ SE5b	PTD1	SPI0_SCK		TPM0_CH1		FXIO0_D1	
59	—	—	43	C2	PTD2	DISABLED		PTD2	SPI0_MOSI	UART2_RX	TPM0_CH2	SPI0_MISO	FXIO0_D2	
60	—	—	44	B3	PTD3	DISABLED		PTD3	SPI0_MISO	UART2_TX	TPM0_CH3	SPI0_MOSI	FXIO0_D3	
61	A3	29	45	A3	PTD4/ LLWU_P14	DISABLED		PTD4/ LLWU_P14	SPI1_PCS0	UART2_RX	TPM0_CH4		FXIO0_D4	
62	B3	30	46	C1	PTD5	ADC0_ SE6b	ADC0_ SE6b	PTD5	SPI1_SCK	UART2_TX	TPM0_CH5		FXIO0_D5	
63	B2	31	47	B2	PTD6/ LLWU_P15	ADC0_ SE7b	ADC0_ SE7b	PTD6/ LLWU_P15	SPI1_MOSI	LPUART0_ RX	I2C1_SDA	SPI1_MISO	FXIO0_D6	

64 LQFP	36 XFBGA	32 QFN	48 QFN	64 MAPBGA	Pin Name	Default	ALT0	ALT1	ALT2	ALT3	ALT4	ALT5	ALT6	ALT7
64	A2	32	48	A2	PTD7	DISABLED		PTD7	SPI1_MISO	LPUART0_TX	I2C1_SCL	SPI1_MOSI	FXIO0_D7	

4.2 Pin properties

The following table lists the pin properties.

64 LQFP	36 XFBGA	32 QFN	48 QFN	64 MAPBGA	Pin name	Driver strength	Default status after POR	Pullup/ pulldown setting after POR	Slew rate after POR	Passive pin filter after POR	Open drain	Pin interrupt
—	F2	9	—	—	VREF0	—	—	—	—	—	—	—
—	—	—	—	C5	NC	—	—	—	—	—	—	—
1	A1	1	—	A1	PTE0	ND	Hi-Z	—	FS	N	N	Y
2	B1	2	—	B1	PTE1	ND	Hi-Z	—	FS	N	N	Y
3	—	—	1	—	VDD	—	—	—	—	—	—	—
4	C4	—	2	C4	VSS	—	—	—	—	—	—	—
5	C2	3	3	E1	PTE16	ND	Hi-Z	—	FS	N	N	Y
6	C1	4	4	D1	PTE17	ND	HI-Z	—	FS	N	N	Y
7	D1	5	5	E2	PTE18	ND	Hi-Z	—	FS	N	N	Y
8	D2	6	6	D2	PTE19	ND	HI-Z	—	FS	N	N	Y
9	E3	—	7	G1	PTE20	ND	Hi-Z	—	SS	N	N	Y
10	E2	—	8	F1	PTE21	ND	Hi-Z	—	SS	N	N	Y
11	E1	—	—	G2	PTE22	ND	Hi-Z	—	SS	N	N	Y
12	F1	—	—	F2	PTE23	ND	Hi-Z	—	SS	N	N	Y
13	D3	7	9	F4	VDDA	—	—	—	—	—	—	—
14	D3	7	10	G4	VREFH	—	—	—	—	—	—	—
14	—	—	10	G4	VREFO	—	—	—	—	—	—	—
15	D4	8	11	G3	VREFL	—	—	—	—	—	—	—
16	D4	8	12	F3	VSSA	—	—	—	—	—	—	—
17	—	—	13	H1	PTE29	ND	Hi-Z	—	SS	N	N	Y

Table continues on the next page...

64 LQFP	36 XFBGA	32 QFN	48 QFN	64 MAPBGA	Pin name	Driver strength	Default status after POR	Pullup/ pulldown setting after POR	Slew rate after POR	Passive pin filter after POR	Open drain	Pin interrupt
18	F2	9	14	H2	PTE30	ND	Hi-Z	—	SS	N	N	Y
19	—	—	—	H3	PTE31	ND	Hi-Z	—	SS	N	N	Y
20	—	—	15	H4	PTE24	ND	Hi-Z	—	SS	N	N	Y
21	—	—	16	H5	PTE25	ND	Hi-Z	—	SS	N	N	Y
22	F3	10	17	D3	PTA0	ND	L	PD	SS	N	N	Y
23	F4	11	18	D4	PTA1	ND	Hi-Z	—	SS	N	N	Y
24	E4	12	19	E5	PTA2	ND	Hi-Z	—	SS	N	N	Y
25	E5	13	20	D5	PTA3	ND	H	PU	FS	N	N	Y
26	F5	14	21	G5	PTA4	ND	H	PU	SS	Y	N	Y
27	—	—	—	F5	PTA5	ND	Hi-Z	—	SS	N	N	Y
28	—	—	—	H6	PTA12	ND	Hi-Z	—	SS	N	N	Y
29	—	—	—	G6	PTA13	ND	Hi-Z	—	SS	N	N	Y
30	C3	15	22	G7	VDD	ND	—	—	—	—	—	—
31	C4	16	23	H7	VSS	ND	—	—	—	—	—	—
32	F6	17	24	H8	PTA18	ND	Hi-Z	—	SS	N	N	Y
33	E6	18	25	G8	PTA19	ND	Hi-Z	—	SS	N	N	Y
34	D5	19	26	F8	PTA20	ND	H	PU	SS	N	Y	Y
35	D6	20	27	F7	PTB0/LLWU_P5	HD	Hi-Z	—	FS	N	N	Y
36	C6	21	28	F6	PTB1	HD	Hi-Z	—	FS	N	N	Y
37	—	—	29	E7	PTB2	ND	Hi-Z	—	SS	N	N	Y
38	—	—	30	E8	PTB3	ND	Hi-Z	—	SS	N	N	Y
39	—	—	31	E6	PTB16	ND	Hi-Z	—	FS	N	N	Y
40	—	—	32	D7	PTB17	ND	Hi-Z	—	FS	N	N	Y
41	—	—	—	D6	PTB18	ND	Hi-Z	—	SS	N	N	Y
42	—	—	—	C7	PTB19	ND	Hi-Z	—	SS	N	N	Y
43	—	—	33	D8	PTC0	ND	Hi-Z	—	SS	N	N	Y
44	C5	22	34	C6	PTC1/ LLWU_P6/ RTC_CLKIN	ND	Hi-Z	—	SS	N	N	Y
45	B6	23	35	B7	PTC2	ND	Hi-Z	—	SS	N	N	Y

Table continues on the next page...

64 LQFP	36 XFBGA	32 QFN	48 QFN	64 MAPBGA	Pin name	Driver strength	Default status after POR	Pullup/ pulldown setting after POR	Slew rate after POR	Passive pin filter after POR	Open drain	Pin interrupt
46	B5	24	36	C8	PTC3/ LLWU_P7	HD	Hi-Z	—	FS	N	N	Y
47	—	—	—	E3	VSS	—	—	—	—	—	—	—
48	—	—	—	E4	VDD	—	—	—	—	—	—	—
49	A6	25	37	B8	PTC4/ LLWU_P8	HD	Hi-Z	—	FS	N	N	Y
50	A5	26	38	A8	PTC5/ LLWU_P9	ND	Hi-Z	—	FS	N	N	Y
51	B4	27	39	A7	PTC6/ LLWU_P10	ND	Hi-Z	—	FS	N	N	Y
52	A4	28	40	B6	PTC7	ND	Hi-Z	—	FS	N	N	Y
53	—	—	—	A6	PTC8	ND	Hi-Z	—	SS	N	N	Y
54	—	—	—	B5	PTC9	ND	Hi-Z	—	SS	N	N	Y
55	—	—	—	B4	PTC10	ND	Hi-Z	—	SS	N	N	Y
56	—	—	—	A5	PTC11	ND	Hi-Z	—	SS	N	N	Y
57	—	—	41	C3	PTD0	ND	Hi-Z	—	FS	N	N	Y
58	—	—	42	A4	PTD1	ND	Hi-Z	—	FS	N	N	Y
59	—	—	43	C2	PTD2	ND	Hi-Z	—	FS	N	N	Y
60	—	—	44	B3	PTD3	ND	Hi-Z	—	FS	N	N	Y
61	A3	29	45	A3	PTD4/ LLWU_P14	ND	Hi-Z	—	FS	N	N	Y
62	B3	30	46	C1	PTD5	ND	Hi-Z	—	FS	N	N	Y
63	B2	31	47	B2	PTD6/ LLWU_P15	HD	Hi-Z	—	FS	N	N	Y
64	A2	32	48	A2	PTD7	HD	Hi-Z	—	FS	N	N	Y

Properties	Abbreviation	Descriptions
Driver strength	ND	Normal drive
	HD	High drive
Default status after POR	Hi-Z	High impendence

Table continues on the next page...

Properties	Abbreviation	Descriptions
	H	High level
	L	Low level
Pullup/ pulldown setting after POR	PD	Pullup
	PU	Pulldown
Slew rate after POR	FS	Fast slew rate
	SS	Slow slew rate
Passive Pin Filter after POR	N	Disabled
	Y	Enabled
Open drain	N	Disabled[1]
	Y	Enabled[2]
Pin interrupt	Y	Yes

1. When I2C module is enabled and a pin is functional for I2C, this pin is (pseudo-) open drain enabled. When UART or LPUART module is enabled and a pin is functional for UART or LPUART, this pin is (pseudo-) open drain configurable.
2. PTA20 is a true open drain pin that must never be pulled above VDD.

4.3 Module Signal Description Tables

The following sections correlate the chip-level signal name with the signal name used in the module's chapter. They also briefly describe the signal function and direction.

4.3.1 Core modules

Table 9. SWD signal descriptions

Chip signal name	Module signal name	Description	I/O
SWD_DIO	SWD_DIO	Serial Wire Debug Data Input/Output The SWD_DIO pin is used by an external debug tool for communication and device control. This pin is pulled up internally.	Input / Output
SWD_CLK	SWD_CLK	Serial Wire Clock This pin is the clock for debug logic when in the Serial Wire Debug mode. This pin is pulled down internally.	Input

4.3.2 System modules

Table 10. System signal descriptions

Chip signal name	Module signal name	Description	I/O
$\overline{\text{NMI}}$	—	Non-maskable interrupt **NOTE:** Driving the $\overline{\text{NMI}}$ signal low forces a non-maskable interrupt, if the $\overline{\text{NMI}}$ function is selected on the corresponding pin.	I
$\overline{\text{RESET}}$	—	Reset bidirectional signal	I/O
VDD	—	MCU power	I
VSS	—	MCU ground	I

Table 11. LLWU signal descriptions

Chip signal name	Module signal name	Description	I/O
LLWU_Pn	LLWU_Pn	Wakeup inputs (n = 5, 6, 7, 8, 9, 10, 14, 15)	I

4.3.3 Clock modules

Table 12. OSC signal descriptions

Chip signal name	Module signal name	Description	I/O
EXTAL0	EXTAL	External clock/Oscillator input	I
XTAL0	XTAL	Oscillator output	O

4.3.4 Analog

This table presents the signal descriptions of the ADC0 module.

Table 13. ADC0 signal descriptions

Chip signal name	Module signal name	Description	I/O
ADC0_DPn	DADP3–DADP0	Differential Analog Channel Inputs	I
ADC0_DMn	DADM3–DADM0	Differential Analog Channel Inputs	I
ADC0_SEn	AD*n*	Single-Ended Analog Channel Inputs	I
VREFH	V_{REFSH}	Voltage Reference Select High	I

Table continues on the next page...

Table 13. ADC0 signal descriptions (continued)

Chip signal name	Module signal name	Description	I/O
VREFL	V_{REFSL}	Voltage Reference Select Low	I
VDDA	V_{DDA}	Analog Power Supply	I
VSSA	V_{SSA}	Analog Ground	I
EXTRG_IN	ADHWT	Hardware trigger	I

This table presents the signal descriptions of the CMP0 module.

Table 14. CMP0 signal descriptions

Chip signal name	Module signal name	Description	I/O
CMP0_IN[5:0]	IN[5:0]	Analog voltage inputs	I
CMP0_OUT	CMPO	Comparator output	O

Table 15. VREF signal descriptions

Chip signal name	Module signal name	Description	I/O
VREF_OUT	VREF_OUT	Internally-generated voltage reference output	O

4.3.5 Timer Modules

Table 16. TPM0 signal descriptions

Chip signal name	Module signal name	Description	I/O
TPM_CLKIN[1:0]	TPM_EXTCLK	External clock. TPM external clock can be selected to increment the TPM counter on every rising edge synchronized to the counter clock.	I
TPM0_CH[5:0]	TPM_CHn	TPM channel (n = 5 to 0). A TPM channel pin is configured as output when configured in an output compare or PWM mode and the TPM counter is enabled, otherwise the TPM channel pin is an input.	I/O

Table 17. TPM1 signal descriptions

Chip signal name	Module signal name	Description	I/O
TPM_CLKIN[1:0]	TPM_EXTCLK	External clock. TPM external clock can be selected to increment the TPM counter on every rising edge synchronized to the counter clock.	I
TPM1_CH[1:0]	TPM_CHn	TPM channel (n = 1 to 0). A TPM channel pin is configured as output when configured in an output compare or PWM mode and the TPM counter is enabled, otherwise the TPM channel pin is an input.	I/O

Table 18. TPM2 signal descriptions

Chip signal name	Module signal name	Description	I/O
TPM_CLKIN[1:0]	TPM_EXTCLK	External clock. TPM external clock can be selected to increment the TPM counter on every rising edge synchronized to the counter clock.	I
TPM2_CH[1:0]	TPM_CHn	TPM channel (n = 1 to 0). A TPM channel pin is configured as output when configured in an output compare or PWM mode and the TPM counter is enabled, otherwise the TPM channel pin is an input.	I/O

Table 19. LPTMR0 signal descriptions

Chip signal name	Module signal name	Description	I/O
LPTMR0_ALT[3:1]	LPTMR0_ALT*n*	Pulse Counter Input pin	I

Table 20. RTC signal descriptions

Chip signal name	Module signal name	Description	I/O
RTC_CLKOUT[1]	RTC_CLKOUT	1 Hz square-wave output or OSCERCLK	O

1. RTC_CLKOUT can also be driven with OSCERCLK via SIM control bit SIM_SOPT[RCTCLKOUTSEL]

4.3.6 Communication interfaces

Table 21. SPI0 signal descriptions

Chip signal name	Module signal name	Description	I/O
SPI0_MISO	MISO	Master Data In, Slave Data Out	I/O

Table continues on the next page...

Table 21. SPI0 signal descriptions (continued)

Chip signal name	Module signal name	Description	I/O
SPI0_MOSI	MOSI	Master Data Out, Slave Data In	I/O
SPI0_SCLK	SPSCK	SPI Serial Clock	I/O
SPI0_PCS0	$\overline{SS}$	Slave Select	I/O

Table 22. SPI1 signal descriptions

Chip signal name	Module signal name	Description	I/O
SPI1_MISO	MISO	Master Data In, Slave Data Out	I/O
SPI1_MOSI	MOSI	Master Data Out, Slave Data In	I/O
SPI1_SCLK	SPSCK	SPI Serial Clock	I/O
SPI1_PCS0	$\overline{SS}$	Slave Select	I/O

Table 23. I^2C0 signal descriptions

Chip signal name	Module signal name	Description	I/O
I2C0_SCL	SCL	Bidirectional serial clock line of the I^2C system.	I/O
I2C0_SDA	SDA	Bidirectional serial data line of the I^2C system.	I/O

Table 24. I^2C1 signal descriptions

Chip signal name	Module signal name	Description	I/O
I2C1_SCL	SCL	Bidirectional serial clock line of the I^2C system.	I/O
I2C1_SDA	SDA	Bidirectional serial data line of the I^2C system.	I/O

Table 25. LPUART0 signal descriptions

Chip signal name	Module signal name	Description	I/O
LPUART0_TX	TxD	Transmit data	I/O
LPUART0_RX	RxD	Receive data	I

Table 26. LPUART1 signal descriptions

Chip signal name	Module signal name	Description	I/O
LPUART1_TX	TxD	Transmit data	I/O
LPUART1_RX	RxD	Receive data	I

Table 27. UART2 signal descriptions

Chip signal name	Module signal name	Description	I/O
UART2_TX	TxD	Transmit data	O
UART2_RX	RxD	Receive data	I

Table 28. FlexIO signal descriptions

Chip signal name	Module signal name	Description	I/O
FXIO0_Dx	FXIO_Dn (n=0...7)	Bidirectional FlexIO Shifter and Timer pin inputs/outputs	I/O

4.3.7 Human-machine interfaces (HMI)

Table 29. GPIO Signal Descriptions

Chip signal name	Module signal name	Description	I/O
PTA[31:0]	PORTA31–PORTA0	General-purpose input/output	I/O
PTB[31:0]	PORTB31–PORTB0	General-purpose input/output	I/O
PTC[11:0]	PORTC11–PORTC0	General-purpose input/output	I/O
PTD[7:0]	PORTD7–PORTD0	General-purpose input/output	I/O
PTE[31:0]	PORTE31–PORTE0	General-purpose input/output	I/O

4.4 KL17 Family Pinouts

The figure below shows the 32 QFN pinouts.

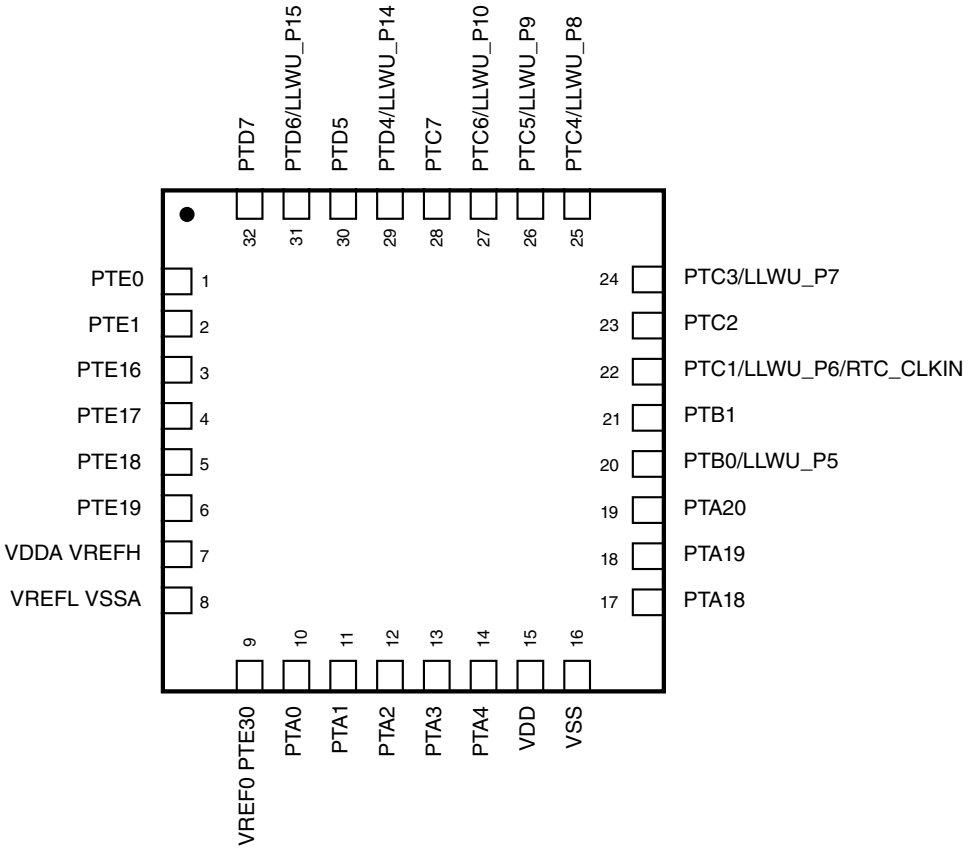

Figure 6. 32 QFN Pinout diagram (transparent top view)

The figure below shows the 48 QFN pinouts.

NOTE

The 48 QFN package for this product is not yet available. However, it is included in Package Your Way program for Kinetis MCUs. Visit freescale.com/KPYW for more details.

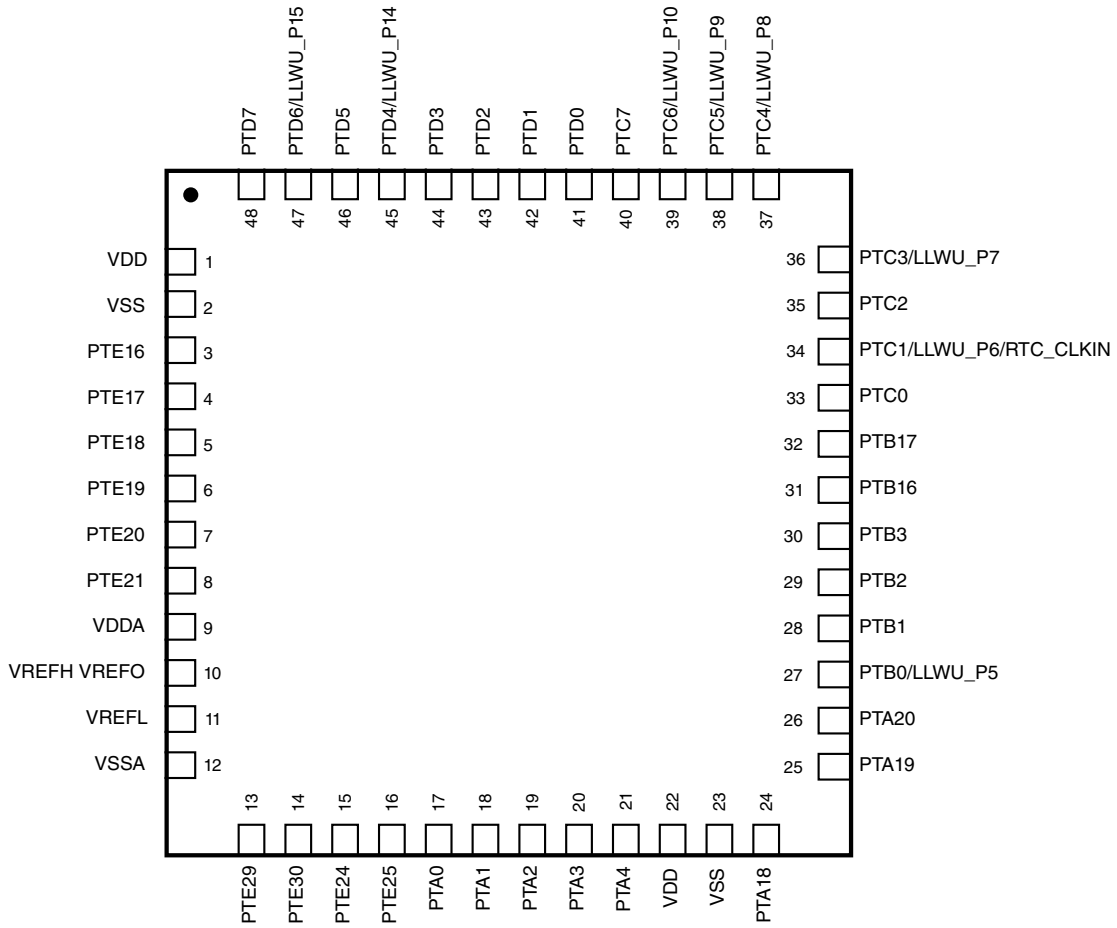

Figure 7. 48 QFN Pinout diagram (transparent top view)

The figure below shows the 64 MAPBGA pinouts.

NOTE

The 64 MAPBGA package for this product is not yet available. However, it is included in Package Your Way program for Kinetis MCUs. Visit freescale.com/KPYW for more details.

	1	2	3	4	5	6	7	8	
A	PTE0	PTD7	PTD4/ LLWU_P14	PTD1	PTC11	PTC8	PTC6/ LLWU_P10	PTC5/ LLWU_P9	A
B	PTE1	PTD6/ LLWU_P15	PTD3	PTC10	PTC9	PTC7	PTC2	PTC4/ LLWU_P8	B
C	PTD5	PTD2	PTD0	VSS	NC	PTC1/ LLWU_P6/ RTC_CLKIN	PTB19	PTC3/ LLWU_P7	C
D	PTE17	PTE19	PTA0	PTA1	PTA3	PTB18	PTB17	PTC0	D
E	PTE16	PTE18	VSS	VDD	PTA2	PTB16	PTB2	PTB3	E
F	PTE21	PTE23	VSSA	VDDA	PTA5	PTB1	PTB0/ LLWU_P5	PTA20	F
G	PTE20	PTE22	VREFL	VREFH VREFO	PTA4	PTA13	VDD	PTA19	G
H	PTE29	PTE30	PTE31	PTE24	PTE25	PTA12	VSS	PTA18	H
	1	2	3	4	5	6	7	8	

Figure 8. 64 MAPBGA Pinout diagram (transparent top view)

The figure below shows the 64 LQFP pinouts:

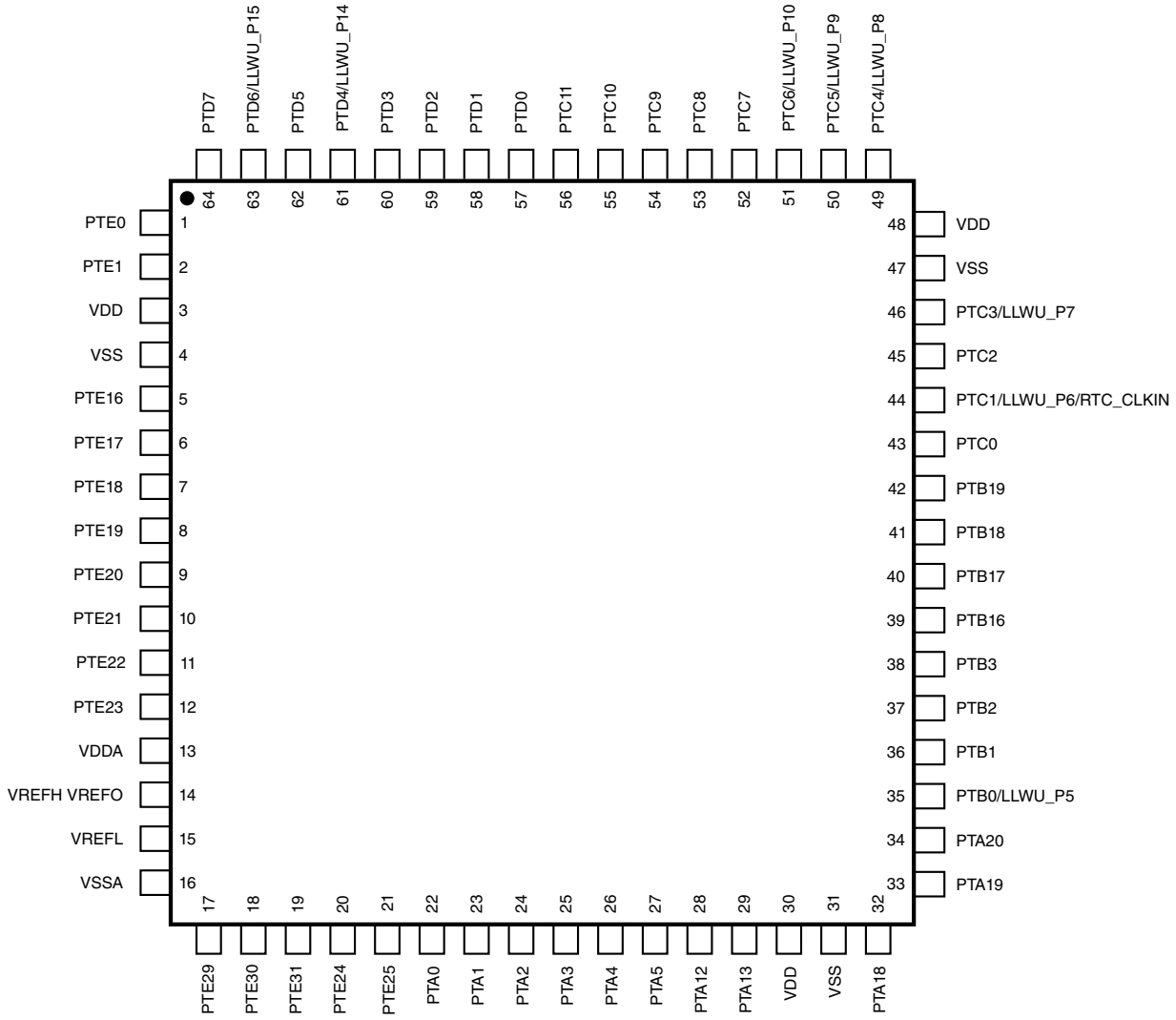

Figure 9. 64 LQFP Pinout diagram (top view)

The figure below shows the 36 XFBGA pinouts:

	1	2	3	4	5	6	
A	PTE0	PTD7	PTD4/ LLWU_P14	PTC7	PTC5/ LLWU_P9	PTC4/ LLWU_P8	A
B	PTE1	PTD6/ LLWU_P15	PTD5	PTC6/ LLWU_P10	PTC3/ LLWU_P7	PTC2	B
C	PTE17	PTE16	VDD	VSS	PTC1/ LLWU_P6/ RTC_CLKIN	PTB1	C
D	PTE18	PTE19	VDDA/ VREFH	VREFL/ VSSA	PTA20	PTB0/ LLWU_P5	D
E	PTE22	PTE21	PTE20	PTA2	PTA3	PTA19	E
F	PTE23	VREF0/ PTE30	PTA0	PTA1	PTA4	PTA18	F
	1	2	3	4	5	6	

Figure 10. 36 XFBGA Pinout diagram (transparent top view)

4.5 Package dimensions

The following figures show the dimensions of the package options for the devices supported by this document.

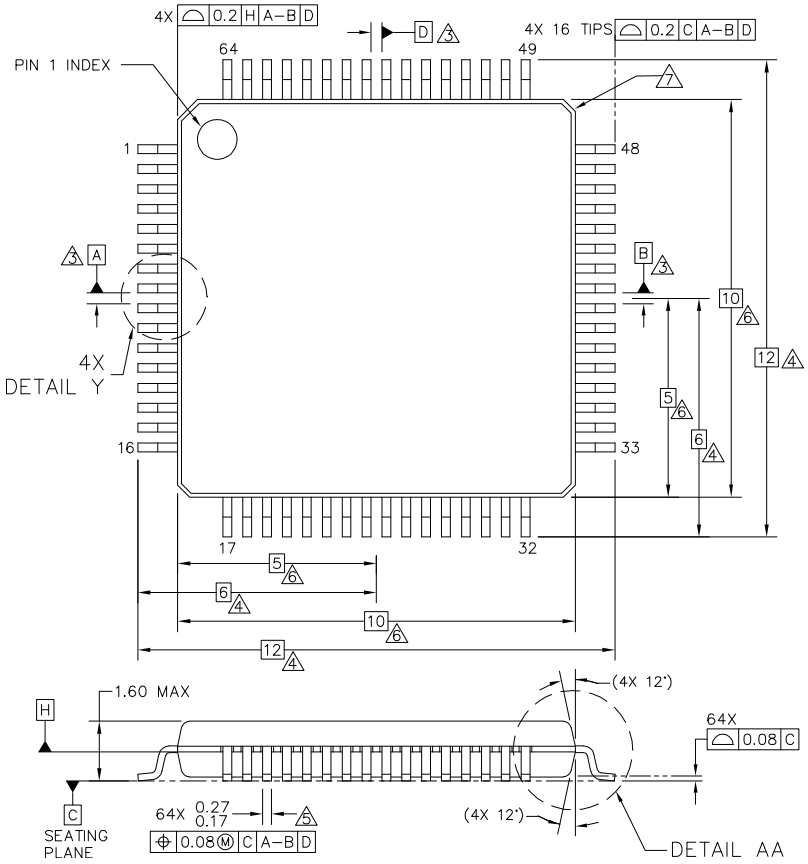

Figure 11. 64-pin LQFP package dimensions 1

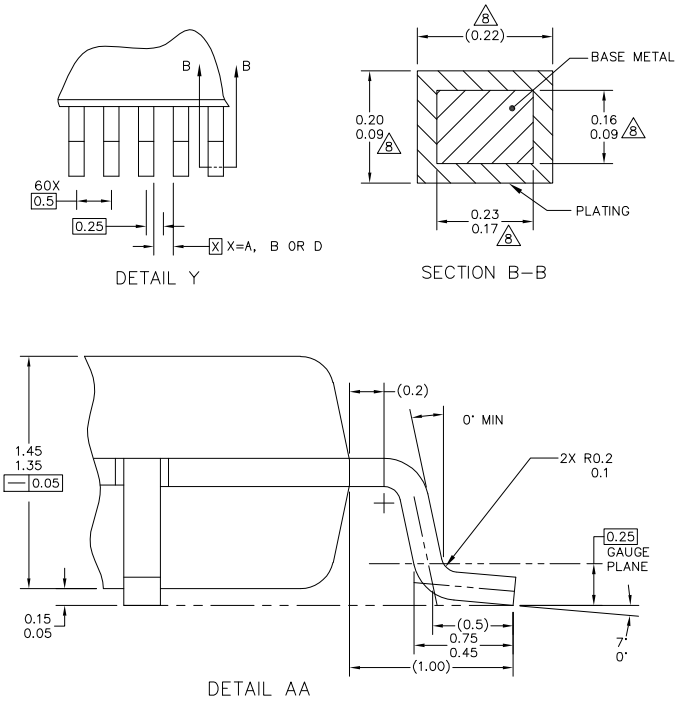

NOTES:

1. DIMENSIONS ARE IN MILLIMETERS.
2. DIMENSIONING AND TOLERANCING PER ASME Y14.5M–1994.
3. DATUMS A, B AND D TO BE DETERMINED AT DATUM PLANE H.
4. DIMENSIONS TO BE DETERMINED AT SEATING PLANE C.
5. THIS DIMENSION DOES NOT INCLUDE DAMBAR PROTRUSION. ALLOWABLE DAMBAR PROTRUSION SHALL NOT CAUSE THE LEAD WIDTH TO EXCEED THE UPPER LIMIT BY MORE THAN 0.08 MM AT MAXIMUM MATERIAL CONDITION. DAMBAR CANNOT BE LOCATED ON THE LOWER RADIUS OR THE FOOT. MINIMUM SPACE BETWEEN PROTRUSION AND ADJACENT LEAD SHALL NOT BE LESS THAN 0.07 MM.
6. THIS DIMENSION DOES NOT INCLUDE MOLD PROTRUSION. ALLOWABLE PROTRUSION IS 0.25 MM PER SIDE. THIS DIMENSION IS MAXIMUM PLASTIC BODY SIZE DIMENSION INCLUDING MOLD MISMATCH.
7. EXACT SHAPE OF EACH CORNER IS OPTIONAL.
8. THESE DIMENSIONS APPLY TO THE FLAT SECTION OF THE LEAD BETWEEN 0.1 MM AND 0.25 MM FROM THE LEAD TIP.

Figure 12. 64-pin LQFP package dimensions 2

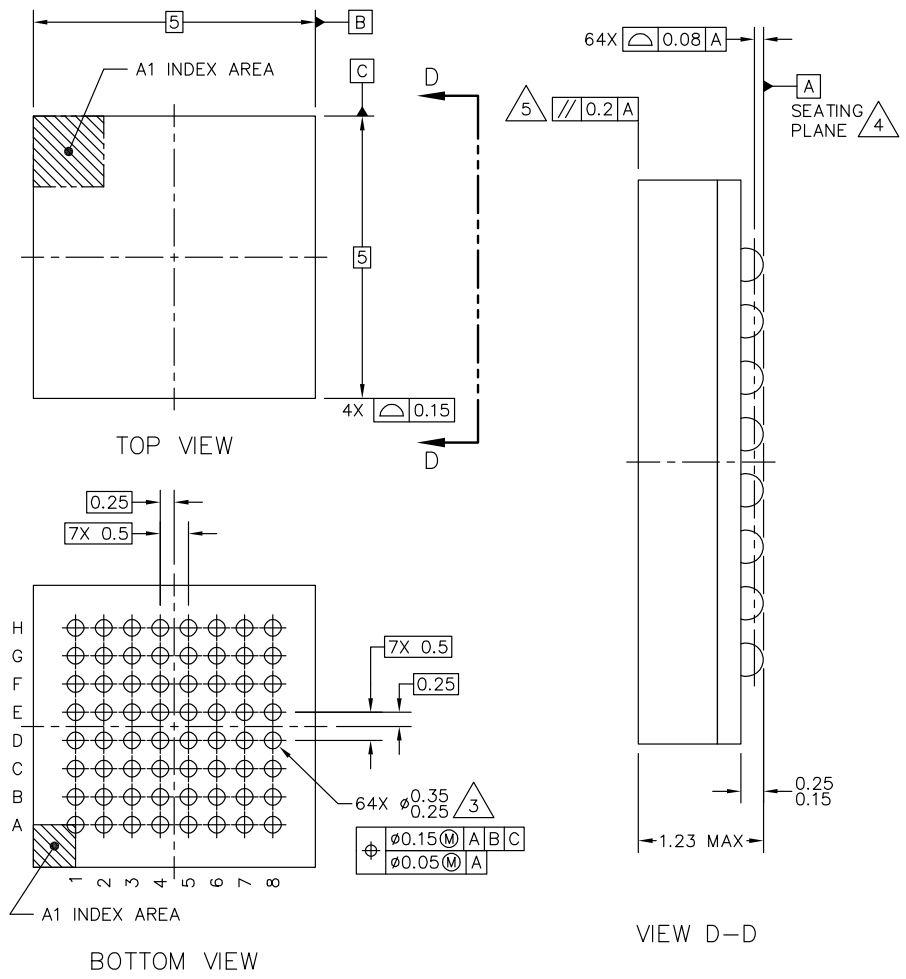

NOTES:

1. ALL DIMENSIONS IN MILLIMETERS.
2. DIMENSIONING AND TOLERANCING PER ASME Y14.5M–1994.
3. MAXIMUM SOLDER BALL DIAMETER MEASURED PARALLEL TO DATUM A.
4. DATUM A, THE SEATING PLANE, IS DETERMINED BY THE SPHERICAL CROWNS OF THE SOLDER BALLS.
5. PARALLELISM MEASUREMENT SHALL EXCLUDE ANY EFFECT OF MARK ON TOP SURFACE OF PACKAGE.

Figure 13. 64-pin MAPBGA package dimension

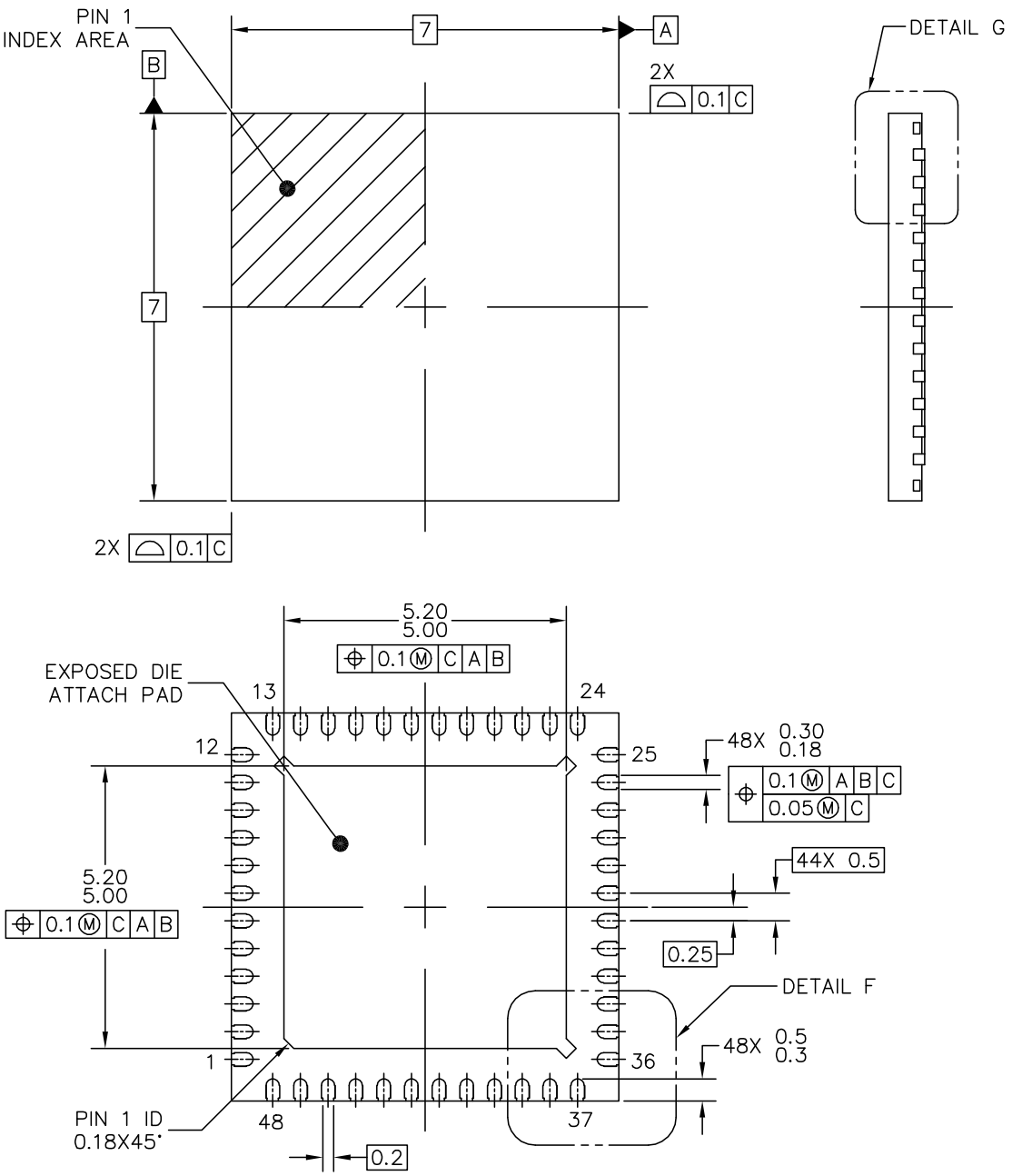

Figure 14. 48-pin QFN package dimension 1

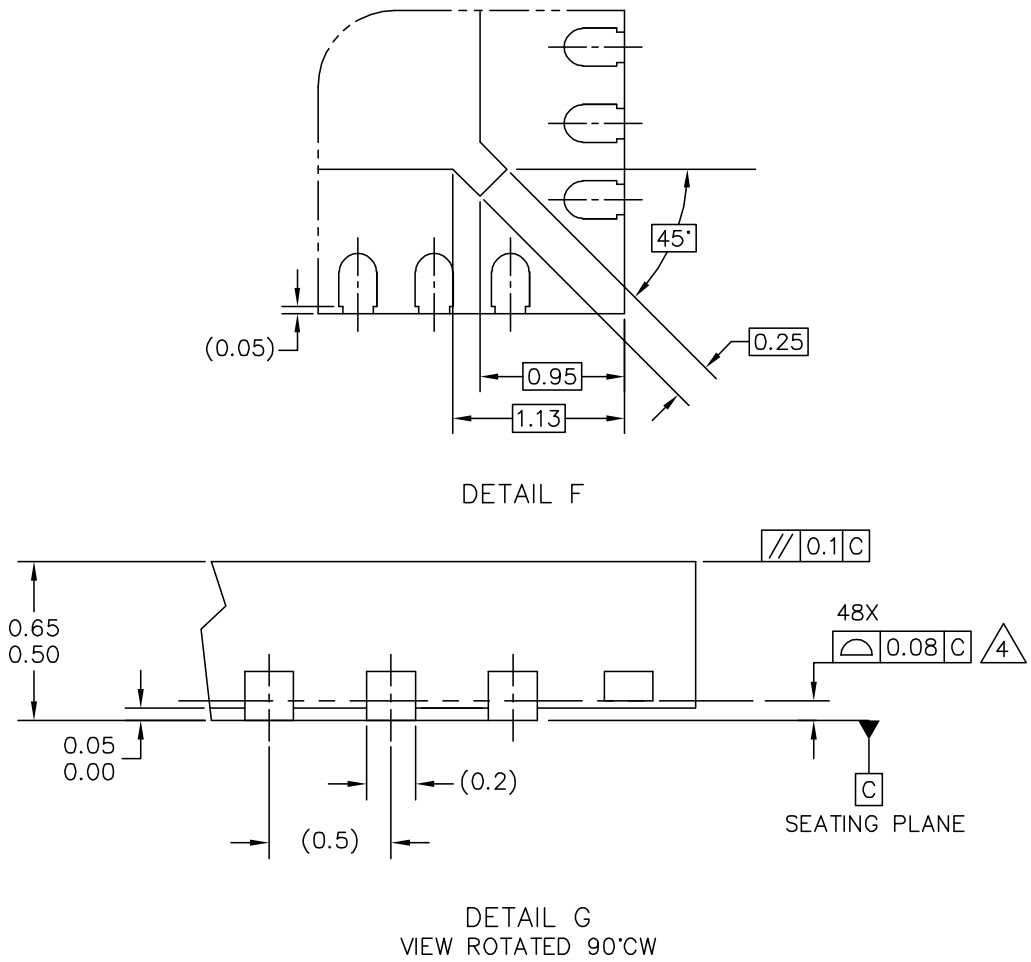

NOTES:

1. ALL DIMENSIONS ARE IN MILLIMETERS.
2. DIMENSIONING AND TOLERANCING PER ASME Y14.5M–1994.
3. THIS IS A NON–JEDEC REGISTERED PACKAGE.
4. COPLANARITY APPLIES TO LEADS AND DIE ATTACH FLAG.
5. MIN. METAL GAP SHOULD BE 0.2 MM.

Figure 15. 48-pin QFN package dimension 2

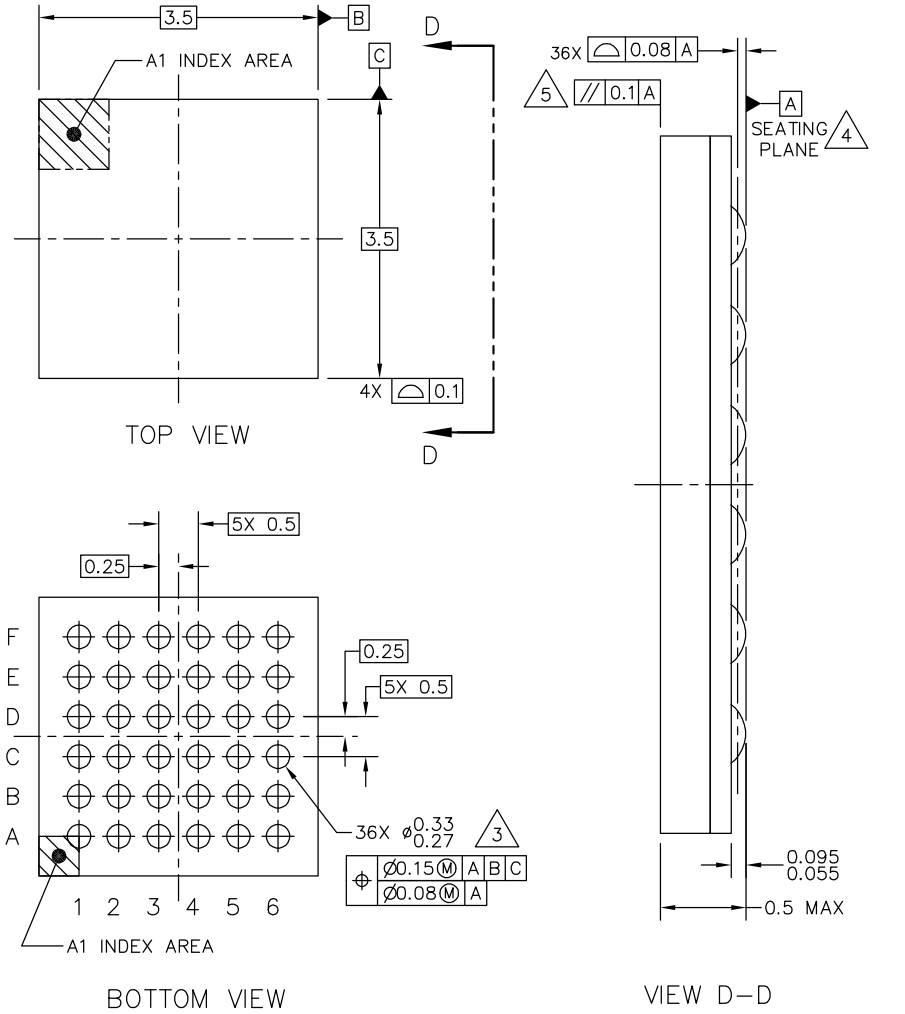

NOTES:

1. ALL DIMENSIONS IN MILLIMETERS.
2. DIMENSIONING AND TOLERANCING PER ASME Y14.5M–1994.
3. MAXIMUM SOLDER BALL DIAMETER MEASURED PARALLEL TO DATUM A.
4. DATUM A, THE SEATING PLANE, IS DETERMINED BY THE SPHERICAL CROWNS OF THE SOLDER BALLS.
5. PARALLELISM MEASUREMENT SHALL EXCLUDE ANY EFFECT OF MARK ON TOP SURFACE OF PACKAGE.

Figure 16. 36-pin XFBGA package dimension

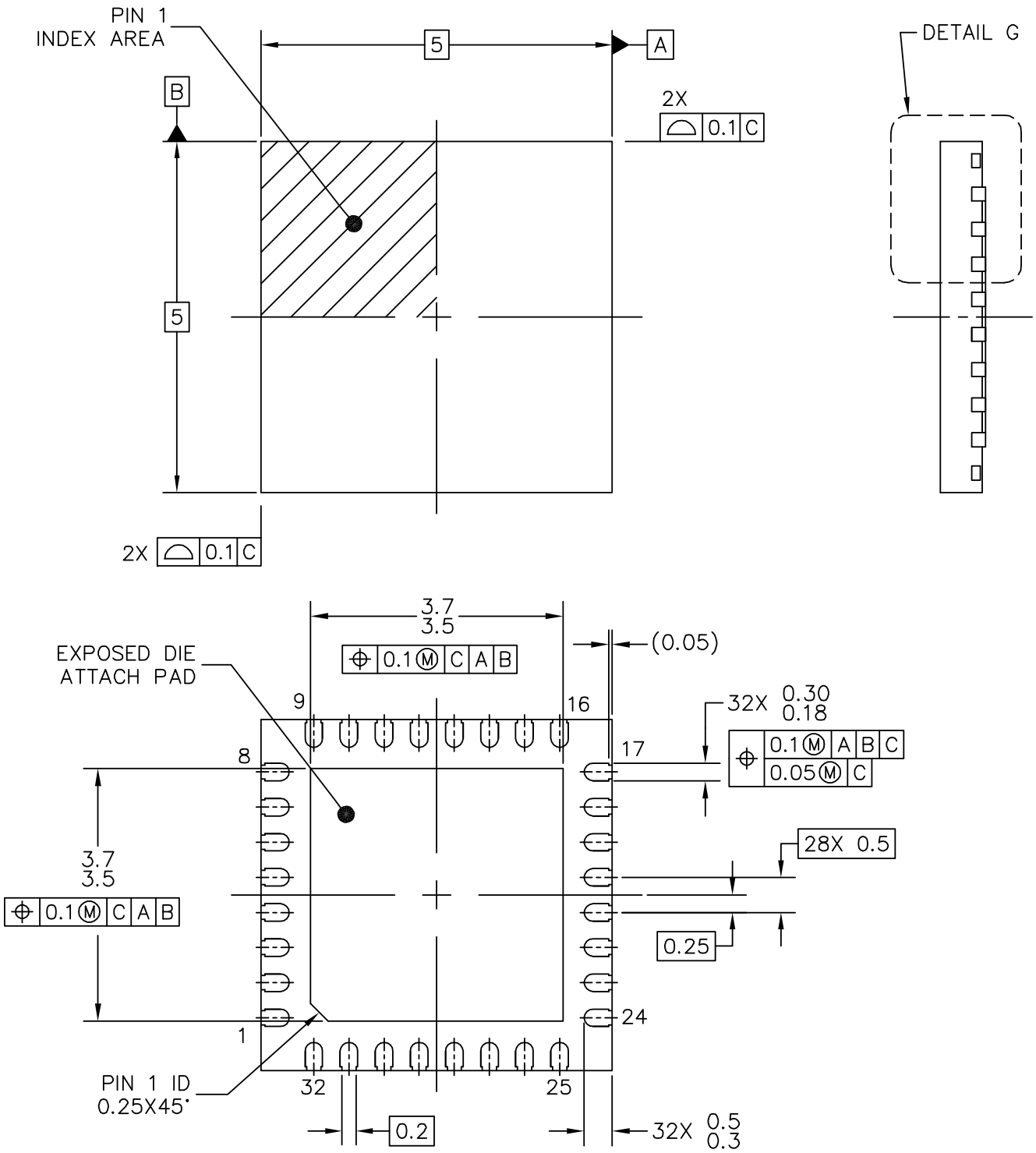

Figure 17. 32-pin QFN package dimension 1

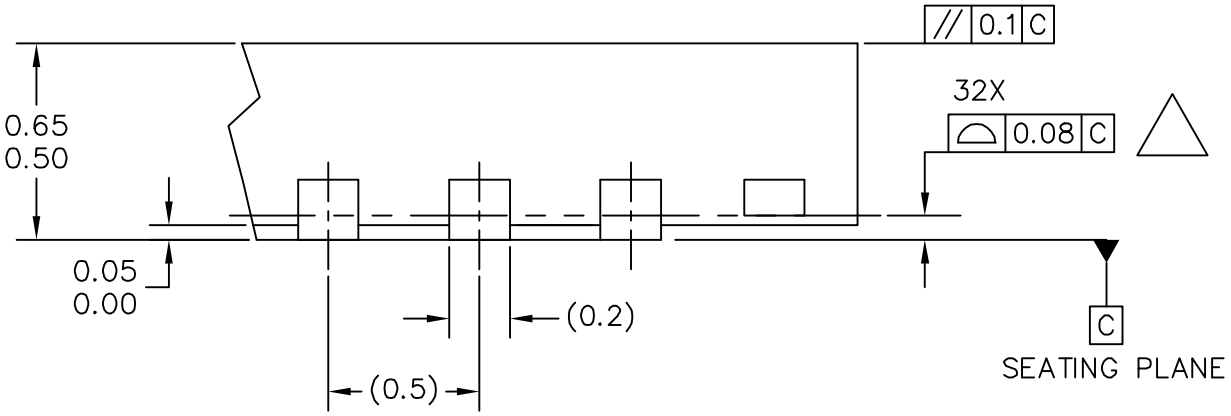

DETAIL G
VIEW ROTATED 90°CW

NOTES:

1. ALL DIMENSIONS ARE IN MILLIMETERS.
2. DIMENSIONING AND TOLERANCING PER ASME Y14.5M–1994.
3. THIS IS A NON–JEDEC REGISTERED PACKAGE.
4. COPLANARITY APPLIES TO LEADS AND DIE ATTACH FLAG.
5. MIN. METAL GAP SHOULD BE 0.2 MM.

Figure 18. 32-pin QFN package dimension 2

5 Electrical characteristics

5.1 Ratings

5.1.1 Thermal handling ratings

Table 30. Thermal handling ratings

Symbol	Description	Min.	Max.	Unit	Notes
T_{STG}	Storage temperature	–55	150	°C	1
T_{SDR}	Solder temperature, lead-free	—	260	°C	2

1. Determined according to JEDEC Standard JESD22-A103, *High Temperature Storage Life*.
2. Determined according to IPC/JEDEC Standard J-STD-020, *Moisture/Reflow Sensitivity Classification for Nonhermetic Solid State Surface Mount Devices*.

5.1.2 Moisture handling ratings

Table 31. Moisture handling ratings

Symbol	Description	Min.	Max.	Unit	Notes
MSL	Moisture sensitivity level	—	3	—	1

1. Determined according to IPC/JEDEC Standard J-STD-020, *Moisture/Reflow Sensitivity Classification for Nonhermetic Solid State Surface Mount Devices*.

5.1.3 ESD handling ratings

Table 32. ESD handling ratings

Symbol	Description	Min.	Max.	Unit	Notes
V_{HBM}	Electrostatic discharge voltage, human body model	–2000	+2000	V	1
V_{CDM}	Electrostatic discharge voltage, charged-device model	–500	+500	V	2
I_{LAT}	Latch-up current at ambient temperature of 105 °C	–100	+100	mA	3

1. Determined according to JEDEC Standard JESD22-A114, *Electrostatic Discharge (ESD) Sensitivity Testing Human Body Model (HBM)*.
2. Determined according to JEDEC Standard JESD22-C101, *Field-Induced Charged-Device Model Test Method for Electrostatic-Discharge-Withstand Thresholds of Microelectronic Components*.
3. Determined according to JEDEC Standard JESD78, *IC Latch-Up Test*.

5.1.4 Voltage and current absolute operating ratings

Table 33. Voltage and current absolute operating ratings

Symbol	Description	Min.	Max.	Unit
V_{DD}	Digital supply voltage	–0.3	3.8	V
I_{DD}	Digital supply current	—	120	mA

Table continues on the next page...

Table 33. Voltage and current absolute operating ratings (continued)

Symbol	Description	Min.	Max.	Unit
V_{IO}	IO pin input voltage	–0.3	V_{DD} + 0.3	V
I_D	Instantaneous maximum current single pin limit (applies to all port pins)	–25	25	mA
V_{DDA}	Analog supply voltage	V_{DD} – 0.3	V_{DD} + 0.3	V

5.2 General

5.2.1 AC electrical characteristics

Unless otherwise specified, propagation delays are measured from the 50% to the 50% point, and rise and fall times are measured at the 20% and 80% points, as shown in the following figure.

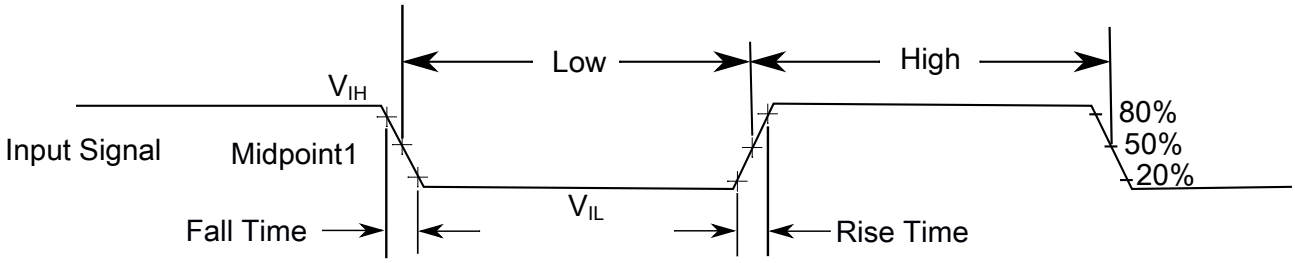

The midpoint is $V_{IL} + (V_{IH} - V_{IL}) / 2$

Figure 19. Input signal measurement reference

All digital I/O switching characteristics, unless otherwise specified, assume that the output pins have the following characteristics.

- C_L=30 pF loads
- Slew rate disabled
- Normal drive strength

5.2.2 Nonswitching electrical specifications

5.2.2.1 Voltage and current operating requirements

Table 34. Voltage and current operating requirements

Symbol	Description	Min.	Max.	Unit	Notes
V_{DD}	Supply voltage	1.71	3.6	V	
V_{DDA}	Analog supply voltage	1.71	3.6	V	
$V_{DD} – V_{DDA}$	V_{DD}-to-V_{DDA} differential voltage	–0.1	0.1	V	
$V_{SS} – V_{SSA}$	V_{SS}-to-V_{SSA} differential voltage	–0.1	0.1	V	
V_{IH}	Input high voltage • 2.7 V ≤ V_{DD} ≤ 3.6 V • 1.7 V ≤ V_{DD} ≤ 2.7 V	 0.7 × V_{DD} 0.75 × V_{DD}	 — —	 V V	
V_{IL}	Input low voltage • 2.7 V ≤ V_{DD} ≤ 3.6 V • 1.7 V ≤ V_{DD} ≤ 2.7 V	 — —	 0.35 × V_{DD} 0.3 × V_{DD}	 V V	
V_{HYS}	Input hysteresis	0.06 × V_{DD}	—	V	
I_{ICIO}	IO pin negative DC injection current — single pin • V_{IN} < V_{SS}-0.3V	-3	—	mA	1
I_{ICcont}	Contiguous pin DC injection current —regional limit, includes sum of negative injection currents of 16 contiguous pins • Negative current injection	-25	—	mA	
V_{ODPU}	Open drain pullup voltage level	V_{DD}	V_{DD}	V	2
V_{RAM}	V_{DD} voltage required to retain RAM	1.2	—	V	

1. All I/O pins are internally clamped to V_{SS} through a ESD protection diode. There is no diode connection to V_{DD}. If V_{IN} greater than V_{IO_MIN} (= V_{SS}-0.3 V) is observed, then there is no need to provide current limiting resistors at the pads. If this limit cannot be observed then a current limiting resistor is required. The negative DC injection current limiting resistor is calculated as $R = (V_{IO_MIN} - V_{IN})/|I_{ICIO}|$.
2. Open drain outputs must be pulled to V_{DD}.

5.2.2.2 LVD and POR operating requirements

Table 35. V_{DD} supply LVD and POR operating requirements

Symbol	Description	Min.	Typ.	Max.	Unit	Notes
V_{POR}	Falling V_{DD} POR detect voltage	0.8	1.1	1.5	V	—
V_{LVDH}	Falling low-voltage detect threshold — high range (LVDV = 01)	2.48	2.56	2.64	V	—
	Low-voltage warning thresholds — high range					1
V_{LVW1H}	• Level 1 falling (LVWV = 00)	2.62	2.70	2.78	V	
V_{LVW2H}	• Level 2 falling (LVWV = 01)	2.72	2.80	2.88	V	
V_{LVW3H}		2.82	2.90	2.98	V	

Table continues on the next page...

Table 35. V_{DD} supply LVD and POR operating requirements (continued)

Symbol	Description	Min.	Typ.	Max.	Unit	Notes
V_{LVW4H}	• Level 3 falling (LVWV = 10) • Level 4 falling (LVWV = 11)	2.92	3.00	3.08	V	
V_{HYSH}	Low-voltage inhibit reset/recover hysteresis — high range	—	±60	—	mV	—
V_{LVDL}	Falling low-voltage detect threshold — low range (LVDV=00)	1.54	1.60	1.66	V	—
	Low-voltage warning thresholds — low range					1
V_{LVW1L}	• Level 1 falling (LVWV = 00)	1.74	1.80	1.86	V	
V_{LVW2L}	• Level 2 falling (LVWV = 01)	1.84	1.90	1.96	V	
V_{LVW3L}	• Level 3 falling (LVWV = 10)	1.94	2.00	2.06	V	
V_{LVW4L}	• Level 4 falling (LVWV = 11)	2.04	2.10	2.16	V	
V_{HYSL}	Low-voltage inhibit reset/recover hysteresis — low range	—	±40	—	mV	—
V_{BG}	Bandgap voltage reference	0.97	1.00	1.03	V	—
t_{LPO}	Internal low power oscillator period — factory trimmed	900	1000	1100	μs	—

1. Rising thresholds are falling threshold + hysteresis voltage

5.2.2.3 Voltage and current operating behaviors

Table 36. Voltage and current operating behaviors

Symbol	Description	Min.	Max.	Unit	Notes
V_{OH}	Output high voltage — normal drive pad				1
	• 2.7 V ≤ V_{DD} ≤ 3.6 V, I_{OH} = –5 mA	V_{DD} – 0.5	—	V	
	• 1.71 V ≤ V_{DD} ≤ 2.7 V, I_{OH} = –2.5 mA	V_{DD} – 0.5	—	V	
V_{OH}	Output high voltage — high drive pad				1
	• 2.7 V ≤ V_{DD} ≤ 3.6 V, I_{OH} = –20 mA	V_{DD} – 0.5	—	V	
	• 1.71 V ≤ V_{DD} ≤ 2.7 V, I_{OH} = –10 mA	V_{DD} – 0.5	—	V	
I_{OHT}	Output high current total for all ports	—	100	mA	
V_{OL}	Output low voltage — normal drive pad				1
	• 2.7 V ≤ V_{DD} ≤ 3.6 V, I_{OL} = 5 mA	—	0.5	V	
	• 1.71 V ≤ V_{DD} ≤ 2.7 V, I_{OL} = 2.5 mA	—	0.5	V	
V_{OL}	Output low voltage — high drive pad				1
	• 2.7 V ≤ V_{DD} ≤ 3.6 V, I_{OL} = 20 mA	—	0.5	V	
	• 1.71 V ≤ V_{DD} ≤ 2.7 V, I_{OL} = 10 mA	—	0.5	V	
I_{OLT}	Output low current total for all ports	—	100	mA	

Table continues on the next page...

Table 36. Voltage and current operating behaviors (continued)

Symbol	Description	Min.	Max.	Unit	Notes
I_{IN}	Input leakage current (per pin) for full temperature range	—	1	μA	2
I_{IN}	Input leakage current (per pin) at 25 °C	—	0.025	μA	2
I_{IN}	Input leakage current (total all pins) for full temperature range	—	64	μA	2
I_{OZ}	Hi-Z (off-state) leakage current (per pin)	—	1	μA	
R_{PU}	Internal pullup resistors	20	50	kΩ	3

1. PTB0, PTB1, PTC3, PTC4, PTD6, and PTD7 I/O have both high drive and normal drive capability selected by the associated PTx_PCRn[DSE] control bit. All other GPIOs are normal drive only.
2. Measured at V_{DD} = 3.6 V
3. Measured at V_{DD} supply voltage = V_{DD} min and Vinput = V_{SS}

5.2.2.4 Power mode transition operating behaviors

All specifications except t_{POR} and VLLSx → RUN recovery times in the following table assume this clock configuration:

- CPU and system clocks = 48 MHz
- Bus and flash clock = 24 MHz
- HIRC clock mode

Table 37. Power mode transition operating behaviors

Symbol	Description	Min.	Typ.	Max.	Unit	Notes
t_{POR}	After a POR event, amount of time from the point V_{DD} reaches 1.8 V to execution of the first instruction across the operating temperature range of the chip.	—	—	300	μs	
	• VLLS0 → RUN	—	152	166	μs	
	• VLLS1 → RUN	—	152	166	μs	
	• VLLS3 → RUN	—	93	104	μs	
	• LLS → RUN	—	7.5	8	μs	
	• VLPS → RUN	—	7.5	8	μs	
	• STOP → RUN	—	7.5	8	μs	

5.2.2.5 Power consumption operating behaviors

The maximum values stated in the following table represent the characterized results equivalent to the mean plus three times the standard deviation (mean + 3 sigma).

NOTE

The while(1) test is executed with flash cache enabled.

Table 38. Power consumption operating behaviors

Symbol	Description	Min.	Typ.	Max.	Unit	Notes
I_{DDA}	Analog supply current	—	—	See note	mA	1
I_{DD_RUNCO}	Running CoreMark in flash in compute operation mode—48M HIRC mode, 48 MHz core / 24 MHz flash, V_{DD} = 3.0 V • at 25 °C • at 105 °C	— —	4.79 4.94	4.98 5.14	mA mA	2
I_{DD_RUNCO}	Running While(1) loop in flash in compute operation mode—48M HIRC mode, 48 MHz core / 24 MHz flash, V_{DD} = 3.0 V • at 25 °C • at 105 °C	— —	2.73 2.9	2.87 3.05	mA mA	
I_{DD_RUN}	Run mode current—48M HIRC mode, running CoreMark in Flash all peripheral clock disable 48 MHz core/24 MHz flash, V_{DD} = 3.0 V • at 25 °C • at 105 °C	— —	5.45 5.6	5.67 5.82	mA mA	2
I_{DD_RUN}	Run mode current—48M HIRC mode, running CoreMark in flash all peripheral clock disable, 24 MHz core/12 MHz flash, V_{DD} = 3.0 V • at 25 °C • at 105 °C	— —	3.41 3.56	3.55 3.70	mA mA	2
I_{DD_RUN}	Run mode current—48M HIRC mode, running CoreMark in Flash all peripheral clock disable 12 MHz core/6 MHz flash, V_{DD} = 3.0 V • at 25 °C • at 105 °C	—	2.37 2.52	2.49 2.65	mA mA	2
I_{DD_RUN}	Run mode current—48M HIRC mode, running CoreMark in Flash all peripheral clock enable 48 MHz core/24 MHz flash, V_{DD} = 3.0 V • at 25 °C • at 105 °C	—	7.05 7.2	7.33 7.49	mA mA	2

Table continues on the next page...

Table 38. Power consumption operating behaviors (continued)

Symbol	Description	Min.	Typ.	Max.	Unit	Notes
I_{DD_RUN}	Run mode current—48M HIRC mode, running While(1) loop in flash all peripheral clock disable, 48 MHz core/24 MHz flash, V_{DD} = 3.0 V • at 25 °C • at 105 °C	—	3.39 3.57	3.53 3.71	mA	
I_{DD_RUN}	Run mode current—48M HIRC mode, running While(1) loop in Flash all peripheral clock disable, 24 MHz core/12 MHz flash, V_{DD} = 3.0 V • at 25 °C • at 105 °C	—	2.36 2.53	2.48 2.66	mA	
I_{DD_RUN}	Run mode current—48M HIRC mode, Running While(1) loop in Flash all peripheral clock disable, 12 MHz core/6 MHz flash, V_{DD} = 3.0 V • at 25 °C • at 105 °C	—	1.84 2	1.93 2.10	mA	
I_{DD_RUN}	Run mode current—48M HIRC mode, Running While(1) loop in Flash all peripheral clock enable, 48 MHz core/24 MHz flash, V_{DD} = 3.0 V • at 25 °C • at 105 °C	—	4.98 5.16	5.18 5.37	mA	
I_{DD_VLPRCO}	Very-low-power run core mark in flash in compute operation mode— 8 MHz LIRC mode, 4 MHz core/1 MHz flash, V_{DD} = 3.0 V • at 25 °C	—	710	752.6	μA	
I_{DD_VLPRCO}	Very-low-power-run While(1) loop in SRAM in compute operation mode— 8 MHz LIRC mode, 4 MHz core / 1 MHz flash, V_{DD} = 3.0 V • at 25 °C	—	251	376.5	μA	
I_{DD_VLPRCO}	Very-low-power run While(1) loop in SRAM in compute operation mode:—2 MHz LIRC mode, 2 MHz core / 0.5 MHz flash, V_{DD} = 3.0 V • at 25 °C	—	115	143.75	μA	
I_{DD_VLPR}	Very-low-power run mode current— 2 MHz LIRC mode, While(1) loop in flash all peripheral clock disable, 2 MHz core / 0.5 MHz flash, V_{DD} = 3.0 V • at 25 °C	—	91	136.5	μA	
I_{DD_VLPR}	Very-low-power run mode current— 2 MHz LIRC mode, While(1) loop in flash all peripheral clock disable, 125 kHz core / 31.25 kHz flash, V_{DD} = 3.0 V • at 25 °C	—	34	51	μA	

Table continues on the next page...

Table 38. Power consumption operating behaviors (continued)

Symbol	Description	Min.	Typ.	Max.	Unit	Notes
I_{DD_VLPR}	Very-low-power run mode current— 8 MHz LIRC mode, While(1) loop in flash all peripheral clock disable, 4 MHz core / 1 MHz flash, V_{DD} = 3.0 V • at 25 °C	—	212	318	μA	
I_{DD_VLPR}	Very-low-power run mode current—8 MHz LIRC mode, While(1) loop in flash all peripheral clock enable, 4 MHz core / 1 MHz flash, V_{DD} = 3.0 V • at 25 °C	—	302	392.6	μA	
I_{DD_WAIT}	Wait mode current—core disabled, 48 MHz system/24 MHz bus, flash disabled (flash doze enabled), all peripheral clocks disabled, MCG_Lite under HIRC mode, V_{DD} = 3.0 V • at 25 °C	—	1.81	2.12	mA	
I_{DD_WAIT}	Wait mode current—core disabled, 24 MHz system/12 MHz bus, flash disabled (flash doze enabled), all peripheral clocks disabled, MCG_Lite under HIRC mode, V_{DD} = 3.0 V • at 25 °C	—	1.27	1.46	mA	
I_{DD_VLPW}	Very-low-power wait mode current, core disabled, 4 MHz system/ 1 MHz bus and flash, all peripheral clocks disabled, V_{DD} = 3.0 V • at 25 °C	—	156	193.2	μA	
I_{DD_VLPW}	Very-low-power wait mode current, core disabled, 2 MHz system/ 0.5 MHz bus and flash, all peripheral clocks disabled, V_{DD} = 3.0 V • at 25 °C	—	63	100.8	μA	
I_{DD_VLPW}	Very-low-power wait mode current, core disabled, 125 kHz system/ 31.25 kHz bus and flash, all peripheral clocks disabled, V_{DD} = 3.0 V • at 25 °C	—	32	48	μA	
I_{DD_PSTOP2}	Partial Stop 2, core and system clock disabled, 12 MHz bus and flash, V_{DD} = 3.0 V • at 25 °C	—	1.68	2.05	mA	
I_{DD_PSTOP2}	Partial Stop 2, core and system clock disabled, flash doze enabled, 12 MHz bus, V_{DD} = 3.0 V • at 25 °C	—	1.05	1.26	mA	
I_{DD_STOP}	Stop mode current at 3.0 V • at 25 °C and below • at 50 °C • at 85 °C • at 105 °C	— — — —	158.1 171 203.8 251.7	175.81 180.24 228.64 300.06	μA	

Table continues on the next page...

Table 38. Power consumption operating behaviors (continued)

Symbol	Description	Min.	Typ.	Max.	Unit	Notes
I_{DD_VLPS}	Very-low-power stop mode current at 3.0 V • at 25 °C and below • at 50 °C • at 85 °C • at 105 °C	 — — — —	 2.34 5.04 20.48 42.34	 3.80 8.03 31.97 65.78	μA	
I_{DD_VLPS}	Very-low-power stop mode current at 1.8 V • at 25 °C and below • at 50 °C • at 85 °C • at 105 °C	 — — — —	 2.33 4.95 20.18 41.93	 3.80 7.94 31.57 65.17	μA	
I_{DD_LLS}	Low-leakage stop mode current, all peripheral disable, at 3.0 V • at 25 °C and below • at 50 °C • at 70 °C • at 85 °C • at 105 °C	 — — — — —	 1.71 2.59 4.46 7.55 17.03	 1.96 3.30 7.06 10.15 22.67	μA	
I_{DD_LLS}	Low-leakage stop mode current with RTC current, at 3.0 V • at 25 °C and below • at 50 °C • at 70 °C • at 85 °C • at 105 °C	 — — — — —	 2.27 3.1 4.99 8.1 17.32	 2.52 3.81 7.59 10.70 22.96	μA	3
I_{DD_LLS}	Low-leakage stop mode current with RTC current, at 1.8 V • at 25 °C and below • at 50 °C • at 70 °C • at 85 °C • at 105 °C	 — — — — —	 2.1 2.89 4.65 7.61 16.38	 2.35 3.60 7.25 10.21 22.02	μA	3
I_{DD_VLLS3}	Very-low-leakage stop mode 3 current, all peripheral disable, at 3.0 V • at 25 °C and below • at 50 °C • at 70 °C	 — — — —	 1.43 2.06 3.51 5.91 13.36	 1.58 2.52 5.20 7.60 17.08	μA	

Table continues on the next page...

Table 38. Power consumption operating behaviors (continued)

Symbol	Description	Min.	Typ.	Max.	Unit	Notes
	• at 85 °C • at 105 °C					
I_{DD_VLLS3}	Very-low-leakage stop mode 3 current with RTC current, at 3.0 V • at 25 °C and below • at 50 °C • at 70 °C • at 85 °C • at 105 °C	 — — — — —	 1.83 2.47 3.96 6.44 13.84	 1.98 2.93 5.65 8.13 17.56	μA	3
I_{DD_VLLS3}	Very-low-leakage stop mode 3 current with RTC current, at 1.8 V • at 25 °C and below • at 50 °C • at 70 °C • at 85 °C • at 105 °C	 — — — — —	 1.68 2.27 3.66 5.97 12.92	 1.83 2.73 5.35 7.66 16.64	μA	3
I_{DD_VLLS1}	Very-low-leakage stop mode 1 current all peripheral disabled at 3.0 V • at 25 °C and below • at 50°C • at 70°C • at 85°C • at 105 °C	 — — — — —	 0.84 1.19 2.03 3.54 8.53	 1.06 1.33 2.62 4.13 9.98	μA	
I_{DD_VLLS1}	Very-low-leakage stop mode 1 current RTC enabled at 3.0 V • at 25 °C and below • at 50°C • at 70°C • at 85°C • at 105 °C	 — — — — —	 1.26 1.61 2.5 4.07 9	 1.48 1.75 3.09 4.66 10.45	μA	3
I_{DD_VLLS1}	Very-low-leakage stop mode 1 current RTC enabled at 1.8 V • at 25 °C and below • at 50°C • at 70°C • at 85°C • at 105 °C	 — — — — —	 1.08 1.42 2.21 3.59 8.02	 1.30 1.56 2.80 4.18 9.47	μA	3

Table continues on the next page...

Table 38. Power consumption operating behaviors (continued)

Symbol	Description	Min.	Typ.	Max.	Unit	Notes
I_{DD_VLLS0}	Very-low-leakage stop mode 0 current all peripheral disabled (SMC_STOPCTRL[PORPO] = 0) at 3.0 V • at 25 °C and below • at 50 °C • at 70 °C • at 85 °C • at 105 °C	— — — — 	262 593 1430 2930 7930	360 725 2014 3514 9895	nA	
I_{DD_VLLS0}	Very-low-leakage stop mode 0 current all peripheral disabled (SMC_STOPCTRL[PORPO] = 1) at 3 V • at 25 °C and below • at 50 °C • at 70 °C • at 85 °C • at 105 °C	— — — — 	87 417 1230 2720 7780	185 549 1230 3304 9745	nA	4

1. The analog supply current is the sum of the active or disabled current for each of the analog modules on the device. See each module's specification for its supply current.
2. MCG_Lite configured for HIRC mode. CoreMark benchmark compiled using IAR 7.10 with optimization level high, optimized for balanced.
3. RTC uses external 32 kHz crystal as clock source, and the current includes ERCLK32K power consumption.
4. No brownout

Table 39. Low power mode peripheral adders — typical value

Symbol	Description	Temperature (°C)						Unit
		-40	25	50	70	85	105	
$I_{IRC8MHz}$	8 MHz internal reference clock (IRC) adder. Measured by entering STOP or VLPS mode with 8 MHz IRC enabled, MCG_SC[FCRDIV]=000b, MCG_MC[LIRC_DIV2]=000b.	77	77	77	77	77	77	μA
$I_{IRC2MHz}$	2 MHz internal reference clock (IRC) adder. Measured by entering STOP mode with the 2 MHz IRC enabled, MCG_SC[FCRDIV]=000b, MCG_MC[LIRC_DIV2]=000b.	25	25	25	25	25	25	μA
$I_{EREFSTEN4MHz}$	[C:] External 4 MHz crystal clock adder. Measured by entering STOP or VLPS mode with the crystal enabled.	206	224	230	238	245	253	μA
$I_{EREFSTEN32KHz}$	External 32 kHz crystal clock adder by means of the OSC0_CR[EREFSTEN and EREFSTEN] bits. Measured by	440	490	540	560	570	580	

Table continues on the next page...

Table 39. Low power mode peripheral adders — typical value (continued)

Symbol	Description	Temperature (°C)						Unit
		-40	25	50	70	85	105	
	entering all modes with the crystal enabled. • VLLS1 • VLLS3 • LLS • VLPS • STOP	440 490 510 510	490 490 560 560	540 540 560 560	560 560 560 560	570 570 610 610	580 680 680 680	nA
I_{LPTMR}	LPTMR peripheral adder measured by placing the device in VLLS1 mode with LPTMR enabled using LPO.	30	30	30	85	100	200	nA
I_{CMP}	CMP peripheral adder measured by placing the device in VLLS1 mode with CMP enabled using the 6-bit DAC and a single external input for compare. Includes 6-bit DAC power consumption.	16	16	16	16	16	16	µA
I_{RTC}	RTC peripheral adder measured by placing the device in VLLS1 mode with external 32 kHz crystal enabled by means of the RTC_CR[OSCE] bit and the RTC ALARM set for 1 minute. Includes ERCLK32K (32 kHz external crystal) power consumption.	430	500	500	530	530	760	nA
I_{UART}	UART peripheral adder measured by placing the device in STOP or VLPS mode with selected clock source waiting for RX data at 115200 baud rate. Includes selected clock source power consumption. • IRC8M (8 MHz internal reference clock) • IRC2M (2 MHz internal reference clock)	96 31	96 31	96 31	96 31	96 31	96 31	µA
I_{TPM}	TPM peripheral adder measured by placing the device in STOP or VLPS mode with selected clock source configured for output compare generating 100 Hz clock signal. No load is placed on the I/O generating the clock signal. Includes selected clock source and I/O switching currents. • IRC8M (8 MHz internal reference clock) • IRC2M (2 MHz internal reference clock)	130	130	130	130	130	130	µA

Table continues on the next page...

Table 39. Low power mode peripheral adders — typical value (continued)

Symbol	Description	Temperature (°C)						Unit
		-40	25	50	70	85	105	
		40	40	40	40	40	40	
I_{BG}	Bandgap adder when BGEN bit is set and device is placed in VLPx or VLLSx mode.	45	45	45	45	45	45	μA
I_{ADC}	ADC peripheral adder combining the measured values at V_{DD} and V_{DDA} by placing the device in STOP or VLPS mode. ADC is configured for low power mode using the internal clock and continuous conversions.	320	320	320	320	320	320	μA

5.2.2.5.1 Diagram: Typical IDD_RUN operating behavior

The following data was measured under these conditions:

- MCG-Lite in HIRC for run mode, and LIRC for VLPR mode
- No GPIOs toggled
- Code execution from flash
- For the ALLOFF curve, all peripheral clocks are disabled except FTFA

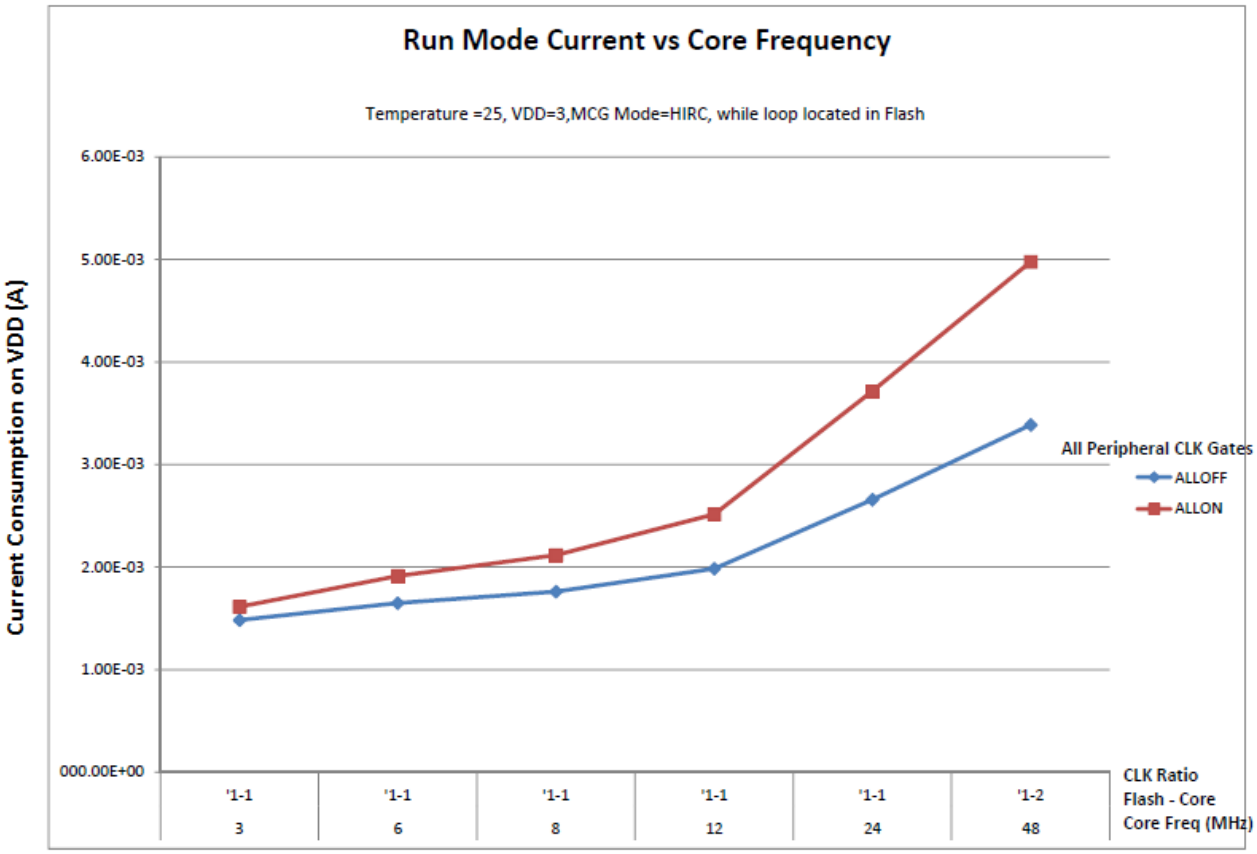

Figure 20. Run mode supply current vs. core frequency

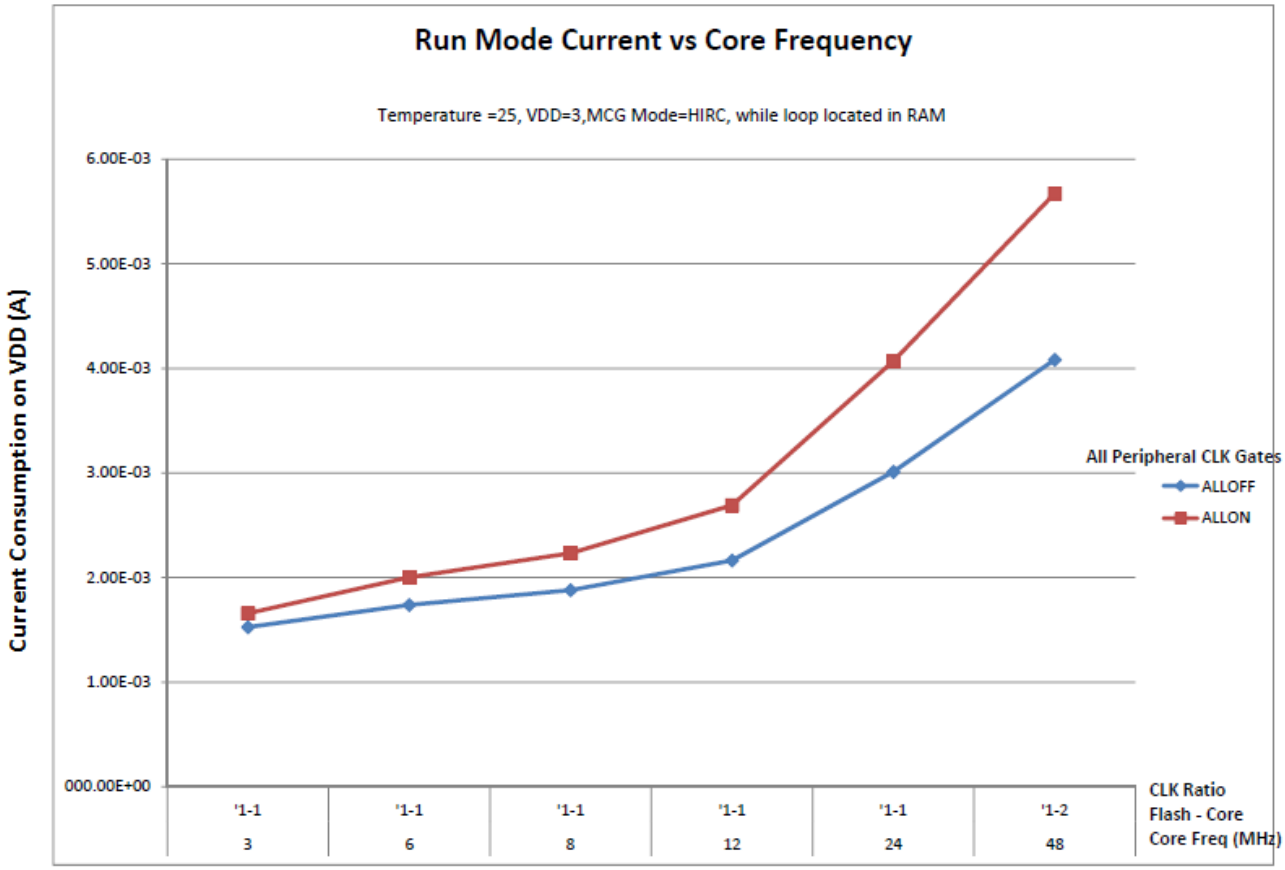
Run Mode Current vs Core Frequency
Temperature =25, VDD=3,MCG Mode=HIRC, while loop located in RAM
Current Consumption on VDD (A)
6.00E-03
5.00E-03
4.00E-03
3.00E-03
2.00E-03
1.00E-03
000.00E+00
All Peripheral CLK Gates
ALLOFF
ALLON
CLK Ratio
Flash - Core
Core Freq (MHz)
'1-1
3
'1-1
6
'1-1
8
'1-1
12
'1-1
24
'1-2
48

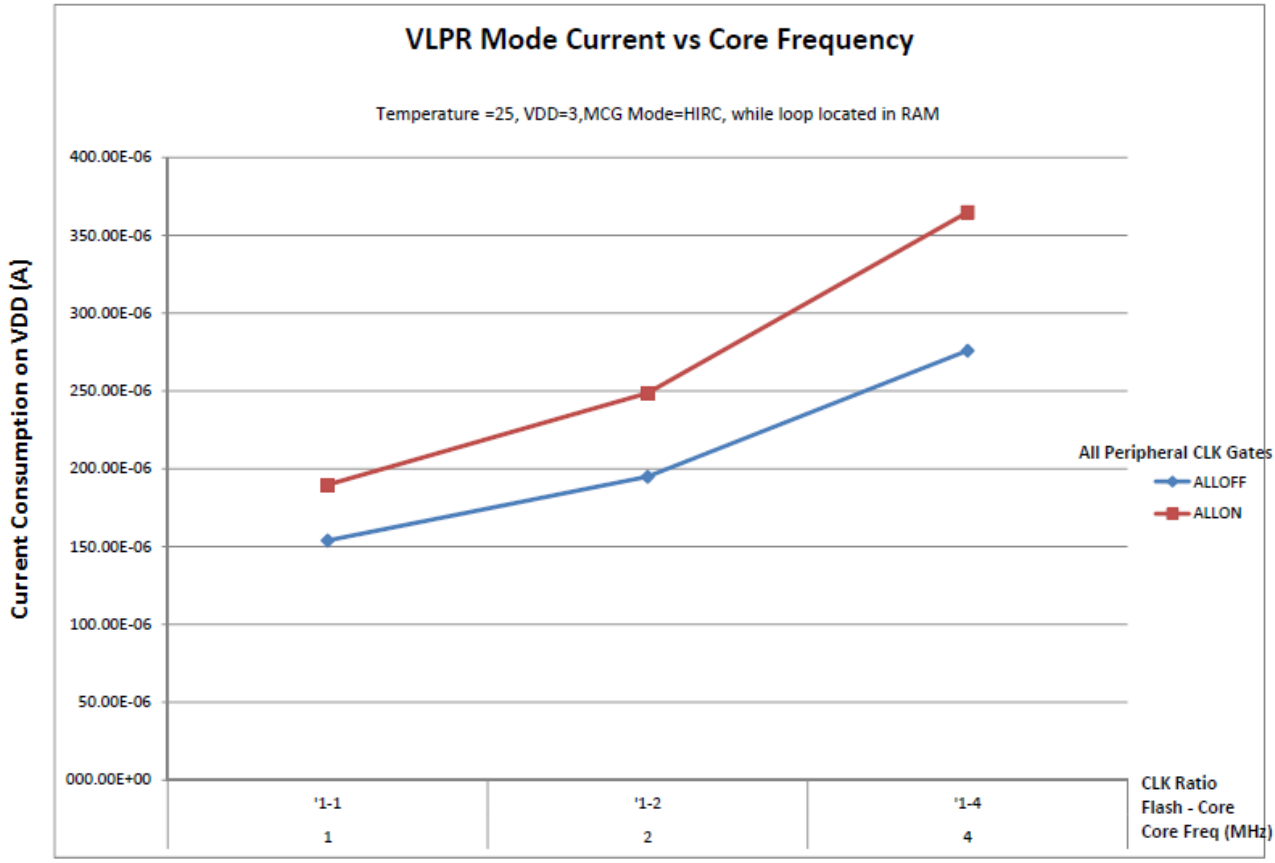

Figure 21. VLPR mode current vs. core frequency

5.2.2.6 EMC performance

Electromagnetic compatibility (EMC) performance is highly dependent on the environment in which the MCU resides. Board design and layout, circuit topology choices, location and characteristics of external components, and MCU software operation play a significant role in the EMC performance. The system designer can consult the following Freescale applications notes, available on freescale.com for advice and guidance specifically targeted at optimizing EMC performance.

- AN2321: Designing for Board Level Electromagnetic Compatibility
- AN1050: Designing for Electromagnetic Compatibility (EMC) with HCMOS Microcontrollers
- AN1263: Designing for Electromagnetic Compatibility with Single-Chip Microcontrollers
- AN2764: Improving the Transient Immunity Performance of Microcontroller-Based Applications

- AN1259: System Design and Layout Techniques for Noise Reduction in MCU-Based Systems
- KL-QRUG (Kinetis L-series Quick Reference).

5.2.2.7 Capacitance attributes

Table 40. Capacitance attributes

Symbol	Description	Min.	Max.	Unit
C_{IN}	Input capacitance	—	7	pF

5.2.3 Switching specifications

5.2.3.1 Device clock specifications

Table 41. Device clock specifications

Symbol	Description	Min.	Max.	Unit
Normal run mode				
f_{SYS}	System and core clock	—	48	MHz
f_{BUS}	Bus clock	—	24	MHz
f_{FLASH}	Flash clock	—	24	MHz
f_{LPTMR}	LPTMR clock	—	24	MHz
VLPR and VLPS modes[1]				
f_{SYS}	System and core clock	—	4	MHz
f_{BUS}	Bus clock	—	1	MHz
f_{FLASH}	Flash clock	—	1	MHz
f_{LPTMR}	LPTMR clock[2]	—	24	MHz
f_{ERCLK}	External reference clock	—	16	MHz
f_{LPTMR_ERCLK}	LPTMR external reference clock	—	16	MHz
$f_{osc_hi_2}$	Oscillator crystal or resonator frequency — high frequency mode (high range) (MCG_C2[RANGE]=1x)	—	16	MHz
f_{TPM}	TPM asynchronous clock	—	8	MHz
f_{UART0}	UART0 asynchronous clock	—	8	MHz

1. The frequency limitations in VLPR and VLPS modes here override any frequency specification listed in the timing specification for any other module. These same frequency limits apply to VLPS, whether VLPS was entered from RUN or from VLPR.
2. The LPTMR can be clocked at this speed in VLPR or VLPS only when the source is an external pin.

5.2.3.2 General switching specifications

These general-purpose specifications apply to all signals configured for GPIO and UART signals.

Table 42. General switching specifications

Description	Min.	Max.	Unit	Notes
GPIO pin interrupt pulse width (digital glitch filter disabled) — Synchronous path	1.5	—	Bus clock cycles	1
External RESET and NMI pin interrupt pulse width — Asynchronous path	100	—	ns	2
GPIO pin interrupt pulse width — Asynchronous path	16	—	ns	2
Port rise and fall time	—	36	ns	3

1. The synchronous and asynchronous timing must be met.
2. This is the shortest pulse that is guaranteed to be recognized.
3. 75 pF load

5.2.4 Thermal specifications

5.2.4.1 Thermal operating requirements

Table 43. Thermal operating requirements

Symbol	Description	Min.	Max.	Unit	Notes
T_J	Die junction temperature	–40	125	°C	
T_A	Ambient temperature	–40	105	°C	1

1. Maximum T_A can be exceeded only if the user ensures that T_J does not exceed the maximum. The simplest method to determine T_J is: $T_J = T_A + R_{\theta JA} \times$ chip power dissipation.

5.2.4.2 Thermal attributes

NOTE

The 48 QFN and 64 MAPBGA packages for this product are not yet available. However, it is included in Package Your Way program for Kinetis MCUs. Visit freescale.com/KPYW for more details.

Table 44. Thermal attributes

Board type	Symbol	Description	32 QFN	36 XFBGA	64 LQFP	Unit	Notes
Single-layer (1S)	$R_{\theta JA}$	Thermal resistance, junction to ambient (natural convection)	101	81.5	71	°C/W	1, 2, 3
Four-layer (2s2p)	$R_{\theta JA}$	Thermal resistance, junction to ambient (natural convection)	33	54.7	53	°C/W	1, 2, 3,4
Single-layer (1S)	$R_{\theta JMA}$	Thermal resistance, junction to ambient (200 ft./min. air speed)	84	71.3	60	°C/W	1, 4, 5
Four-layer (2s2p)	$R_{\theta JMA}$	Thermal resistance, junction to ambient (200 ft./min. air speed)	28	50.0	47	°C/W	1, 4, 5
—	$R_{\theta JB}$	Thermal resistance, junction to board	13	58.0	35	°C/W	6
—	$R_{\theta JC}$	Thermal resistance, junction to case	1.7	45.3	21	°C/W	7
—	Ψ_{JT}	Thermal characterization parameter, junction to package top outside center (natural convection)	3	1.2	5	°C/W	8
—	Ψ_{JB}	Thermal characterization parameter, junction to package bottom (natural convection)	-	44.5	-	°C/W	9

1. Junction temperature is a function of die size, on-chip power dissipation, package thermal resistance, mounting site (board) temperature, ambient temperature, air flow, power dissipation of other components on the board, and board thermal resistance.
2. Per SEMI G38-87 and JEDEC JESD51-2 with the single layer board horizontal.
3. Per JEDEC JESD51-2 with natural convection for horizontally oriented board. Board meets JESD51-9 specification for 1s or 2s2p board, respectively.
4. Per JEDEC JESD51-6 with the board horizontal.
5. Per JEDEC JESD51-6 with forced convection for horizontally oriented board. Board meets JESD51-9 specification for 1s or 2s2p board, respectively.
6. Thermal resistance between the die and the printed circuit board per JEDEC JESD51-8. Board temperature is measured on the top surface of the board near the package.
7. Thermal resistance between the die and the case top surface as measured by the cold plate method (MIL SPEC-883 Method 1012.1).
8. Thermal characterization parameter indicating the temperature difference between package top and the junction temperature per JEDEC JESD51-2. When Greek letters are not available, the thermal characterization parameter is written as Psi-JT.
9. Thermal characterization parameter indicating the temperature difference between package bottom center and the junction temperature per JEDEC JESD51-12. When Greek letters are not available, the thermal characterization parameter is written as Psi-JB.

5.3 Peripheral operating requirements and behaviors

5.3.1 Core modules

5.3.1.1 SWD electricals

Table 45. SWD full voltage range electricals

Symbol	Description	Min.	Max.	Unit
	Operating voltage	1.71	3.6	V
J1	SWD_CLK frequency of operation • Serial wire debug	0	25	MHz
J2	SWD_CLK cycle period	1/J1	—	ns
J3	SWD_CLK clock pulse width • Serial wire debug	20	—	ns
J4	SWD_CLK rise and fall times	—	3	ns
J9	SWD_DIO input data setup time to SWD_CLK rise	10	—	ns
J10	SWD_DIO input data hold time after SWD_CLK rise	0	—	ns
J11	SWD_CLK high to SWD_DIO data valid	—	32	ns
J12	SWD_CLK high to SWD_DIO high-Z	5	—	ns

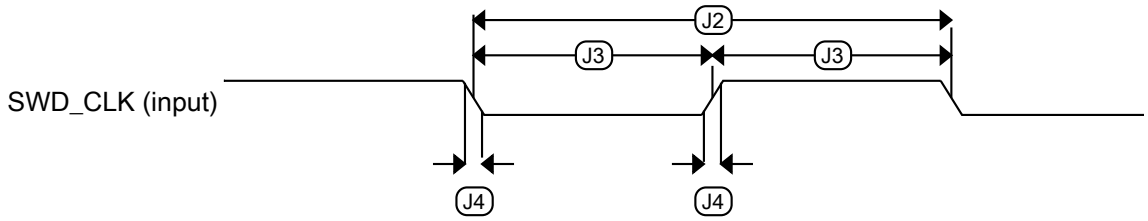

Figure 22. Serial wire clock input timing

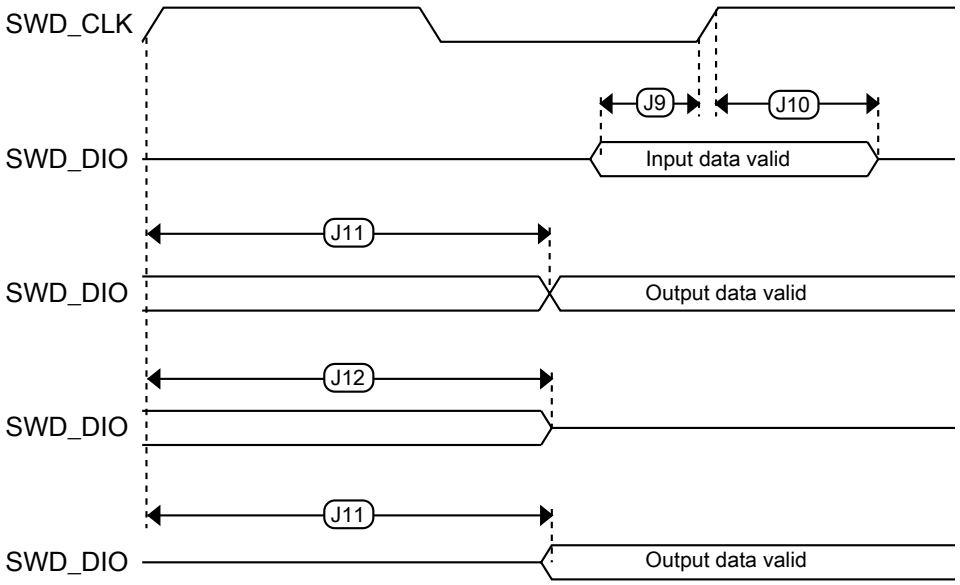

Figure 23. Serial wire data timing

5.3.2 System modules

There are no specifications necessary for the device's system modules.

5.3.3 Clock modules

5.3.3.1 MCG-Lite specifications

Table 46. IRC48M specifications

Symbol	Description	Min.	Typ.	Max.	Unit	Notes
I_{DD48M}	Supply current	—	400	500	μA	
f_{irc48m}	Internal reference frequency	—	48	—	MHz	
$\Delta f_{irc48m_ol_lv}$	Open loop total deviation of IRC48M frequency at low voltage (VDD=1.71V-1.89V) over temperature	—	± 0.5	± 1.5	$\%f_{irc48m}$	
$\Delta f_{irc48m_ol_hv}$	Open loop total deviation of IRC48M frequency at high voltage (VDD=1.89V-3.6V) over temperature	—	± 0.5	± 1.0	$\%f_{irc48m}$	1
J_{cyc_irc48m}	Period Jitter (RMS)	—	35	150	ps	
$t_{irc48mst}$	Startup time	—	2	3	μs	2

1. The maximum value represents characterized results equivalent to the mean plus or minus three times the standard deviation (mean±3 sigma).
2. IRC48M startup time is defined as the time between clock enablement and clock availability for system use. Enable the clock by one of the following settings:
   - MCG operating in an external clocking mode and MCG_C7[OSCSEL]=10, or
   - SIM_SOPT2[PLLFLLSEL]=11

Table 47. IRC8M/2M specification

Symbol	Description	Min.	Typ.	Max.	Unit	Notes
I_{DD_2M}	Supply current in 2 MHz mode	—	14	17	μA	—
I_{DD_8M}	Supply current in 8 MHz mode	—	30	35	μA	—
f_{IRC_2M}	Output frequency	—	2	—	MHz	—
f_{IRC_8M}	Output frequency	—	8	—	MHz	—
$f_{IRC_T_2M}$	Output frequency range (trimmed)	—	—	±3	$\%f_{IRC}$	—
$f_{IRC_T_8M}$	Output frequency range (trimmed)	—	—	±3	$\%f_{IRC}$	—
T_{su_2M}	Startup time	—	—	12.5	μs	—
T_{su_8M}	Startup time	—	—	12.5	μs	—

5.3.3.2 Oscillator electrical specifications

5.3.3.2.1 Oscillator DC electrical specifications

Table 48. Oscillator DC electrical specifications

Symbol	Description	Min.	Typ.	Max.	Unit	Notes
V_{DD}	Supply voltage	1.71	—	3.6	V	
I_{DDOSC}	Supply current — low-power mode (HGO=0)					1
	• 32 kHz	—	500	—	nA	
	• 4 MHz	—	200	—	μA	
	• 8 MHz (RANGE=01)	—	300	—	μA	
	• 16 MHz	—	950	—	μA	
	• 24 MHz	—	1.2	—	mA	
	• 32 MHz	—	1.5	—	mA	
I_{DDOSC}	Supply current — high gain mode (HGO=1)					1
	• 32 kHz	—	25	—	μA	
	• 4 MHz	—	400	—	μA	
	• 8 MHz (RANGE=01)	—	500	—	μA	
	• 16 MHz	—	2.5	—	mA	
	• 24 MHz	—	3	—	mA	
	• 32 MHz	—	4	—	mA	

Table continues on the next page...

Table 48. Oscillator DC electrical specifications (continued)

Symbol	Description	Min.	Typ.	Max.	Unit	Notes
C_x	EXTAL load capacitance	—	—	—		2, 3
C_y	XTAL load capacitance	—	—	—		2, 3
R_F	Feedback resistor — low-frequency, low-power mode (HGO=0)	—	—	—	MΩ	2, 4
	Feedback resistor — low-frequency, high-gain mode (HGO=1)	—	10	—	MΩ	
	Feedback resistor — high-frequency, low-power mode (HGO=0)	—	—	—	MΩ	
	Feedback resistor — high-frequency, high-gain mode (HGO=1)	—	1	—	MΩ	
R_S	Series resistor — low-frequency, low-power mode (HGO=0)	—	—	—	kΩ	
	Series resistor — low-frequency, high-gain mode (HGO=1)	—	200	—	kΩ	
	Series resistor — high-frequency, low-power mode (HGO=0)	—	—	—	kΩ	
	Series resistor — high-frequency, high-gain mode (HGO=1)	—	0	—	kΩ	
V_{pp}[5]	Peak-to-peak amplitude of oscillation (oscillator mode) — low-frequency, low-power mode (HGO=0)	—	0.6	—	V	
	Peak-to-peak amplitude of oscillation (oscillator mode) — low-frequency, high-gain mode (HGO=1)	—	V_{DD}	—	V	
	Peak-to-peak amplitude of oscillation (oscillator mode) — high-frequency, low-power mode (HGO=0)	—	0.6	—	V	
	Peak-to-peak amplitude of oscillation (oscillator mode) — high-frequency, high-gain mode (HGO=1)	—	V_{DD}	—	V	

1. V_{DD}=3.3 V, Temperature =25 °C
2. See crystal or resonator manufacturer's recommendation
3. C_x,C_y can be provided by using the integrated capacitors when the low frequency oscillator (RANGE = 00) is used. For all other cases external capacitors must be used.
4. When low power mode is selected, R_F is integrated and must not be attached externally.
5. The EXTAL and XTAL pins should only be connected to required oscillator components and must not be connected to any other devices.

5.3.3.2.2 Oscillator frequency specifications

Table 49. Oscillator frequency specifications

Symbol	Description	Min.	Typ.	Max.	Unit	Notes
f_{osc_lo}	Oscillator crystal or resonator frequency — low-frequency mode (MCG_C2[RANGE]=00)	32	—	40	kHz	
$f_{osc_hi_1}$	Oscillator crystal or resonator frequency — high-frequency mode (low range) (MCG_C2[RANGE]=01)	3	—	8	MHz	
$f_{osc_hi_2}$	Oscillator crystal or resonator frequency — high frequency mode (high range) (MCG_C2[RANGE]=1x)	8	—	32	MHz	
f_{ec_extal}	Input clock frequency (external clock mode)	—	—	48	MHz	1, 2
t_{dc_extal}	Input clock duty cycle (external clock mode)	40	50	60	%	
t_{cst}	Crystal startup time — 32 kHz low-frequency, low-power mode (HGO=0)	—	750	—	ms	3, 4
	Crystal startup time — 32 kHz low-frequency, high-gain mode (HGO=1)	—	250	—	ms	
	Crystal startup time — 8 MHz high-frequency (MCG_C2[RANGE]=01), low-power mode (HGO=0)	—	0.6	—	ms	
	Crystal startup time — 8 MHz high-frequency (MCG_C2[RANGE]=01), high-gain mode (HGO=1)	—	1	—	ms	

1. Other frequency limits may apply when external clock is being used as a reference for the FLL
2. When transitioning from FEI or FBI to FBE mode, restrict the frequency of the input clock so that, when it is divided by FRDIV, it remains within the limits of the DCO input clock frequency.
3. Proper PC board layout procedures must be followed to achieve specifications.
4. Crystal startup time is defined as the time between the oscillator being enabled and the OSCINIT bit in the MCG_S register being set.

5.3.4 Memories and memory interfaces

5.3.4.1 Flash electrical specifications

This section describes the electrical characteristics of the flash memory module.

5.3.4.1.1 Flash timing specifications — program and erase

The following specifications represent the amount of time the internal charge pumps are active and do not include command overhead.

Table 50. NVM program/erase timing specifications

Symbol	Description	Min.	Typ.	Max.	Unit	Notes
t_{hvpgm4}	Longword Program high-voltage time	—	7.5	18	μs	—
$t_{hversscr}$	Sector Erase high-voltage time	—	13	113	ms	1
$t_{hversall}$	Erase All high-voltage time	—	52	452	ms	1

1. Maximum time based on expectations at cycling end-of-life.

5.3.4.1.2 Flash timing specifications — commands

Table 51. Flash command timing specifications

Symbol	Description	Min.	Typ.	Max.	Unit	Notes
$t_{rd1sec1k}$	Read 1s Section execution time (flash sector)	—	—	60	μs	1
t_{pgmchk}	Program Check execution time	—	—	45	μs	1
t_{rdrsrc}	Read Resource execution time	—	—	30	μs	1
t_{pgm4}	Program Longword execution time	—	65	145	μs	—
t_{ersscr}	Erase Flash Sector execution time	—	14	114	ms	2
t_{rd1all}	Read 1s All Blocks execution time	—	—	0.9	ms	1
t_{rdonce}	Read Once execution time	—	—	25	μs	1
$t_{pgmonce}$	Program Once execution time	—	65	—	μs	—
t_{ersall}	Erase All Blocks execution time	—	70	575	ms	2
t_{vfykey}	Verify Backdoor Access Key execution time	—	—	30	μs	1
$t_{ersallu}$	Erase All Blocks Unsecure execution time	—	70	575	ms	2

1. Assumes 25 MHz flash clock frequency.
2. Maximum times for erase parameters based on expectations at cycling end-of-life.

5.3.4.1.3 Flash high voltage current behaviors

Table 52. Flash high voltage current behaviors

Symbol	Description	Min.	Typ.	Max.	Unit
I_{DD_PGM}	Average current adder during high voltage flash programming operation	—	2.5	6.0	mA
I_{DD_ERS}	Average current adder during high voltage flash erase operation	—	1.5	4.0	mA

5.3.4.1.4 Reliability specifications

Table 53. NVM reliability specifications

Symbol	Description	Min.	Typ.[1]	Max.	Unit	Notes
Program Flash						

Table continues on the next page...

Table 53. NVM reliability specifications (continued)

Symbol	Description	Min.	Typ.[1]	Max.	Unit	Notes
$t_{nvmretp10k}$	Data retention after up to 10 K cycles	5	50	—	years	—
$t_{nvmretp1k}$	Data retention after up to 1 K cycles	20	100	—	years	—
$n_{nvmcycp}$	Cycling endurance	10 K	50 K	—	cycles	2

1. Typical data retention values are based on measured response accelerated at high temperature and derated to a constant 25 °C use profile. Engineering Bulletin EB618 does not apply to this technology. Typical endurance defined in Engineering Bulletin EB619.
2. Cycling endurance represents number of program/erase cycles at –40 °C ≤ T_j ≤ 125 °C.

5.3.5 Security and integrity modules

There are no specifications necessary for the device's security and integrity modules.

5.3.6 Analog

5.3.6.1 ADC electrical specifications

Using differential inputs can achieve better system accuracy than using single-end inputs.

5.3.6.1.1 16-bit ADC operating conditions

Table 54. 16-bit ADC operating conditions

Symbol	Description	Conditions	Min.	Typ.[1]	Max.	Unit	Notes
V_{DDA}	Supply voltage	Absolute	1.71	—	3.6	V	—
ΔV_{DDA}	Supply voltage	Delta to V_{DD} ($V_{DD} – V_{DDA}$)	-100	0	+100	mV	2
ΔV_{SSA}	Ground voltage	Delta to V_{SS} ($V_{SS} – V_{SSA}$)	-100	0	+100	mV	2
V_{ADIN}	Input voltage	• 16-bit differential mode • All other modes	VREFL VREFL	— —	31/32 × VREFH VREFH	V	—
C_{ADIN}	Input capacitance	• 16-bit mode • 8-bit / 10-bit / 12-bit modes	— —	8 4	10 5	pF	—
R_{ADIN}	Input series resistance		—	2	5	kΩ	—
R_{AS}	Analog source resistance (external)	13-bit / 12-bit modes f_{ADCK} < 4 MHz	—	—	5	kΩ	3

Table continues on the next page...

Table 54. 16-bit ADC operating conditions (continued)

Symbol	Description	Conditions	Min.	Typ.[1]	Max.	Unit	Notes
f_{ADCK}	ADC conversion clock frequency	≤ 13-bit mode	1.0	—	18.0	MHz	4
f_{ADCK}	ADC conversion clock frequency	16-bit mode	2.0	—	12.0	MHz	4
C_{rate}	ADC conversion rate	≤ 13-bit modes No ADC hardware averaging Continuous conversions enabled, subsequent conversion time	20.000	—	818.330	ksps	5
C_{rate}	ADC conversion rate	16-bit mode No ADC hardware averaging Continuous conversions enabled, subsequent conversion time	37.037	—	461.467	ksps	5

1. Typical values assume V_{DDA} = 3.0 V, Temp = 25 °C, f_{ADCK} = 1.0 MHz, unless otherwise stated. Typical values are for reference only, and are not tested in production.
2. DC potential difference.
3. This resistance is external to MCU. To achieve the best results, the analog source resistance must be kept as low as possible. The results in this data sheet were derived from a system that had < 8 Ω analog source resistance. The R_{AS}/C_{AS} time constant should be kept to < 1 ns.
4. To use the maximum ADC conversion clock frequency, CFG2[ADHSC] must be set and CFG1[ADLPC] must be clear.
5. For guidelines and examples of conversion rate calculation, download the ADC calculator tool.

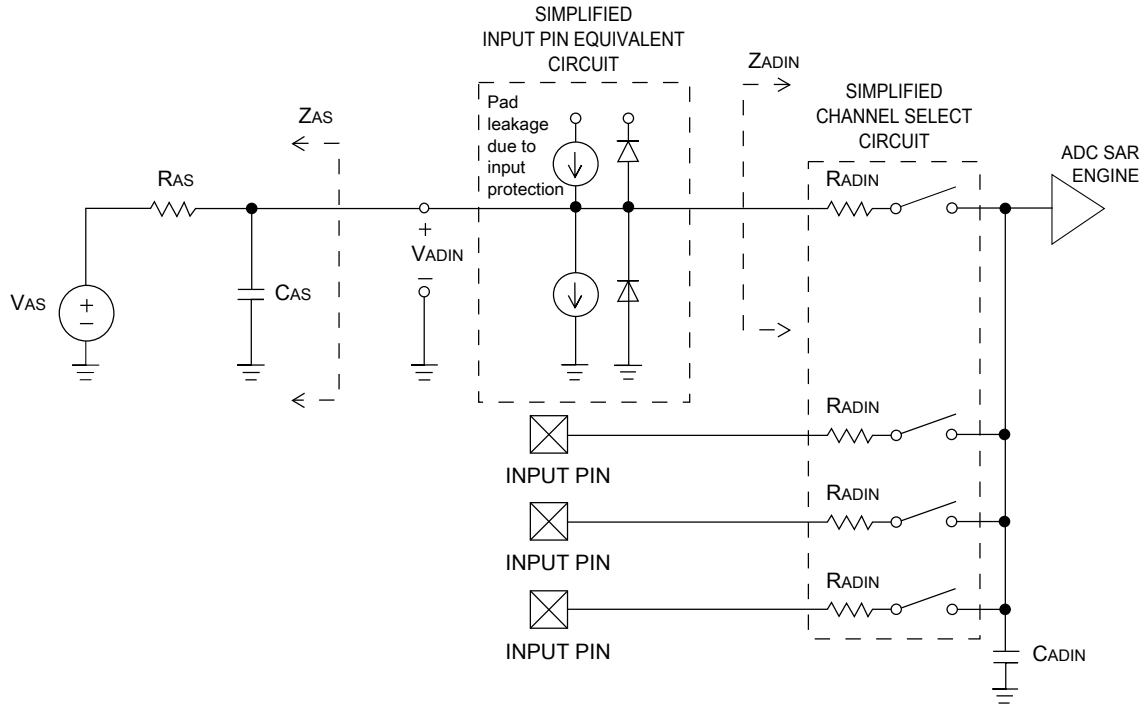

Figure 24. ADC input impedance equivalency diagram

5.3.6.1.2 16-bit ADC electrical characteristics

Table 55. 16-bit ADC characteristics ($V_{REFH} = V_{DDA}$, $V_{REFL} = V_{SSA}$)

Symbol	Description	Conditions[1]	Min.	Typ.[2]	Max.	Unit	Notes
I_{DDA_ADC}	Supply current		0.215	—	1.7	mA	3
f_{ADACK}	ADC asynchronous clock source	• ADLPC = 1, ADHSC = 0 • ADLPC = 1, ADHSC = 1 • ADLPC = 0, ADHSC = 0 • ADLPC = 0, ADHSC = 1	1.2 2.4 3.0 4.4	2.4 4.0 5.2 6.2	3.9 6.1 7.3 9.5	MHz MHz MHz MHz	$t_{ADACK} = 1/f_{ADACK}$
	Sample Time	See Reference Manual chapter for sample times					
TUE	Total unadjusted error	• 12-bit modes • <12-bit modes	— —	±2 ±1.4	±6.8 ±2.1	LSB[4]	5
DNL	Differential non-linearity	• 12-bit modes • <12-bit modes	— —	±0.7 ±0.2	–1.1 to +1.9 –0.3 to 0.5	LSB[4]	5
INL	Integral non-linearity	• 12-bit modes • <12-bit modes	— —	±0.9 ±0.4	–2.7 to +1.9 –0.7 to +0.5	LSB[4]	5
E_{FS}	Full-scale error	• 12-bit modes • <12-bit modes	— —	–4 –1.4	–5.4 –1.8	LSB[4]	$V_{ADIN} = V_{DDA}$[5]
E_Q	Quantization error	• 16-bit modes • ≤13-bit modes	— —	–1 to 0 —	— ±0.5	LSB[4]	
ENOB	Effective number of bits	16-bit differential mode • Avg = 32 • Avg = 4 16-bit single-ended mode • Avg = 32 • Avg = 4	 12.8 11.9 12.2 11.4	 14.5 13.8 13.9 13.1	 — — — —	 bits bits bits bits	6
SINAD	Signal-to-noise plus distortion	See ENOB	6.02 × ENOB + 1.76			dB	
THD	Total harmonic distortion	16-bit differential mode • Avg = 32 16-bit single-ended mode	 — —	 –94 –85	 — —	 dB dB	7

Table continues on the next page...

Table 55. 16-bit ADC characteristics ($V_{REFH} = V_{DDA}$, $V_{REFL} = V_{SSA}$) (continued)

Symbol	Description	Conditions[1]	Min.	Typ.[2]	Max.	Unit	Notes
		• Avg = 32					
SFDR	Spurious free dynamic range	16-bit differential mode • Avg = 32	82	95	—	dB	7
		16-bit single-ended mode • Avg = 32	78	90	—	dB	
E_{IL}	Input leakage error		$I_{In} \times R_{AS}$			mV	I_{In} = leakage current (refer to the MCU's voltage and current operating ratings)
	Temp sensor slope	Across the full temperature range of the device	1.55	1.62	1.69	mV/°C	8
V_{TEMP25}	Temp sensor voltage	25 °C	706	716	726	mV	8

1. All accuracy numbers assume the ADC is calibrated with $V_{REFH} = V_{DDA}$
2. Typical values assume V_{DDA} = 3.0 V, Temp = 25 °C, f_{ADCK} = 2.0 MHz unless otherwise stated. Typical values are for reference only and are not tested in production.
3. The ADC supply current depends on the ADC conversion clock speed, conversion rate and ADC_CFG1[ADLPC] (low power). For lowest power operation, ADC_CFG1[ADLPC] must be set, the ADC_CFG2[ADHSC] bit must be clear with 1 MHz ADC conversion clock speed.
4. 1 LSB = $(V_{REFH} - V_{REFL})/2^N$
5. ADC conversion clock < 16 MHz, Max hardware averaging (AVGE = %1, AVGS = %11)
6. Input data is 100 Hz sine wave. ADC conversion clock < 12 MHz.
7. Input data is 1 kHz sine wave. ADC conversion clock < 12 MHz.
8. ADC conversion clock < 3 MHz

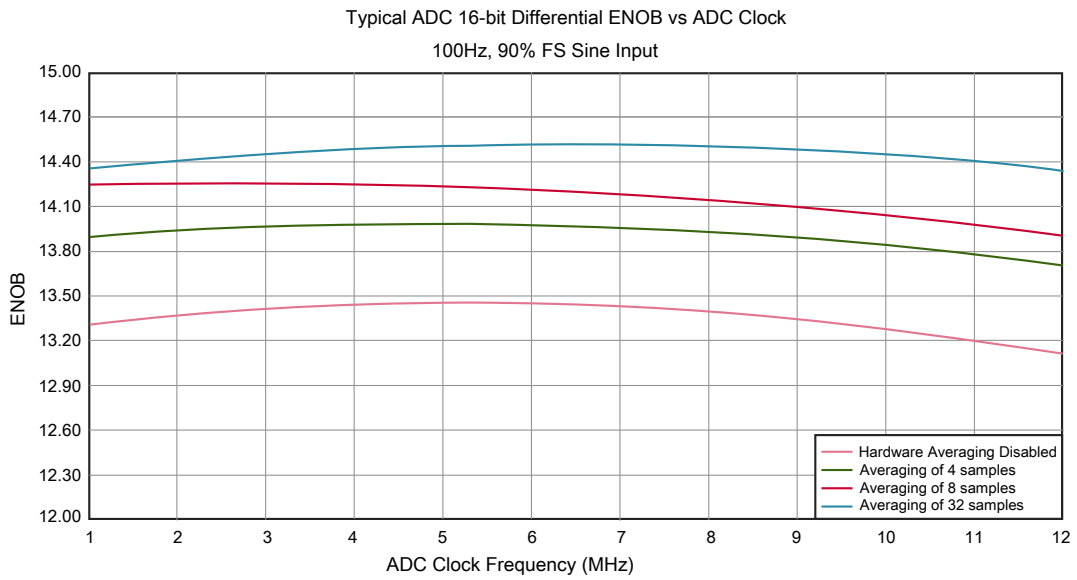

Figure 25. Typical ENOB vs. ADC_CLK for 16-bit differential mode

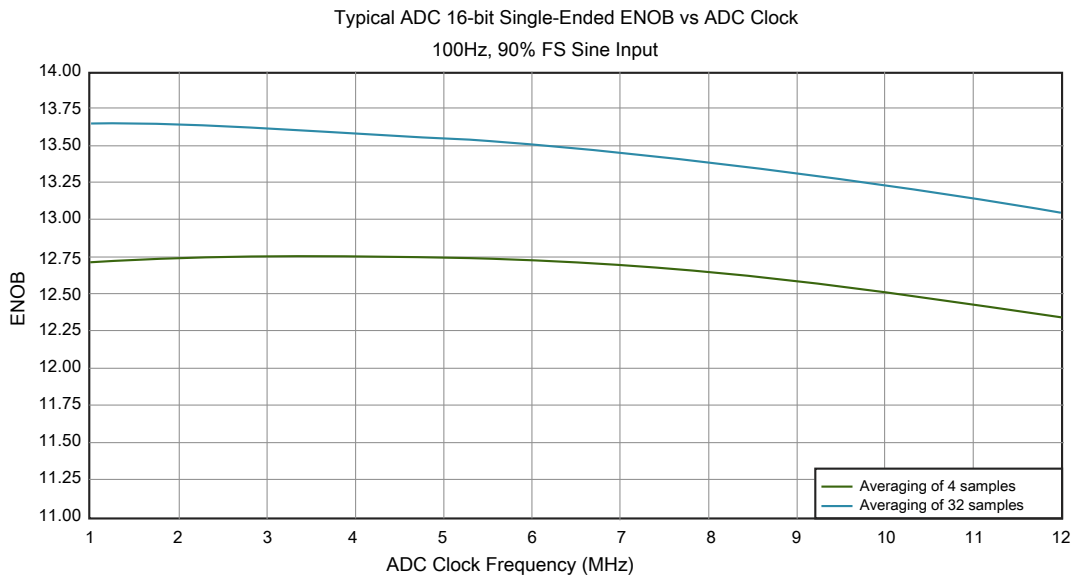

Figure 26. Typical ENOB vs. ADC_CLK for 16-bit single-ended mode

5.3.6.1.3 Voltage reference electrical specifications

Table 56. VREF full-range operating requirements

Symbol	Description	Min.	Max.	Unit	Notes
V_{DDA}	Supply voltage		3.6	V	

Table continues on the next page...

Table 56. VREF full-range operating requirements (continued)

Symbol	Description	Min.	Max.	Unit	Notes
T_A	Temperature	Operating temperature range of the device		°C	
C_L	Output load capacitance	100		nF	1, 2

1. C_L must be connected to VREF_OUT if the VREF_OUT functionality is being used for either an internal or external reference.
2. The load capacitance should not exceed +/-25% of the nominal specified C_L value over the operating temperature range of the device.

Table 57 is tested under the condition of setting VREF_TRM[CHOPEN], VREF_SC[REGEN] and VREF_SC[ICOMPEN] bits to 1.

Table 57. VREF full-range (-40 – 105°C) operating behaviors

Symbol	Description	Min.	Typ.	Max.	Unit	Notes
V_{out}	Voltage reference output with factory trim at nominal V_{DDA} and temperature=25C	1.1915	1.195	1.1977	V	1
V_{out}	Voltage reference output — factory trim	1.1584	—	1.2376	V	1
V_{out}	Voltage reference output — user trim	1.193	—	1.197	V	1
V_{step}	Voltage reference trim step	—	0.5	—	mV	1
I_{bg}	Bandgap only current	—	—	80	μA	1
I_{hp}	High-power buffer current	—	—	1	mA	1
ΔV_{LOAD}	Load regulation	—	200	—	μV	1, 2
T_{stup}	Buffer startup time	—	—	100	μs	
$T_{chop_osc_stup}$	Internal bandgap start-up delay with chop oscillator enabled	—	—	35	ms	—
V_{vdrift}	Voltage drift (Vmax -Vmin across the full voltage range)	—	2	—	mV	1

1. See the chip's Reference Manual for the appropriate settings of the VREF Status and Control register.
2. Load regulation voltage is the difference between the VREF_OUT voltage with no load vs. voltage with defined load

Table 58. VREF limited-range (0 – 50°C) operating behaviors

Symbol	Description	Min.	Max.	Unit	Notes
V_{out}	Voltage reference output with factory trim	1.173	1.225	V	

5.3.6.2 CMP and 6-bit DAC electrical specifications

Table 59. Comparator and 6-bit DAC electrical specifications

Symbol	Description	Min.	Typ.	Max.	Unit
V_{DD}	Supply voltage	1.71	—	3.6	V
I_{DDHS}	Supply current, High-speed mode (EN=1, PMODE=1)	—	—	200	μA
I_{DDLS}	Supply current, low-speed mode (EN=1, PMODE=0)	—	—	20	μA
V_{AIN}	Analog input voltage	V_{SS} – 0.3	—	V_{DD}	V
V_{AIO}	Analog input offset voltage	—	—	20	mV
V_H	Analog comparator hysteresis[1]				
	• CR0[HYSTCTR] = 00	—	5	—	mV
	• CR0[HYSTCTR] = 01	—	10	—	mV
	• CR0[HYSTCTR] = 10	—	20	—	mV
	• CR0[HYSTCTR] = 11	—	30	—	mV
V_{CMPOh}	Output high	V_{DD} – 0.5	—	—	V
V_{CMPOl}	Output low	—	—	0.5	V
t_{DHS}	Propagation delay, high-speed mode (EN=1, PMODE=1)	20	50	200	ns
t_{DLS}	Propagation delay, low-speed mode (EN=1, PMODE=0)	80	250	600	ns
	Analog comparator initialization delay[2]	—	—	40	μs
I_{DAC6b}	6-bit DAC current adder (enabled)	—	7	—	μA
INL	6-bit DAC integral non-linearity	–0.5	—	0.5	LSB[3]
DNL	6-bit DAC differential non-linearity	–0.3	—	0.3	LSB

1. Typical hysteresis is measured with input voltage range limited to 0.6 to V_{DD}–0.6 V.
2. Comparator initialization delay is defined as the time between software writes to change control inputs (Writes to CMP_DACCR[DACEN], CMP_DACCR[VRSEL], CMP_DACCR[VOSEL], CMP_MUXCR[PSEL], and CMP_MUXCR[MSEL]) and the comparator output settling to a stable level.
3. 1 LSB = $V_{reference}$/64

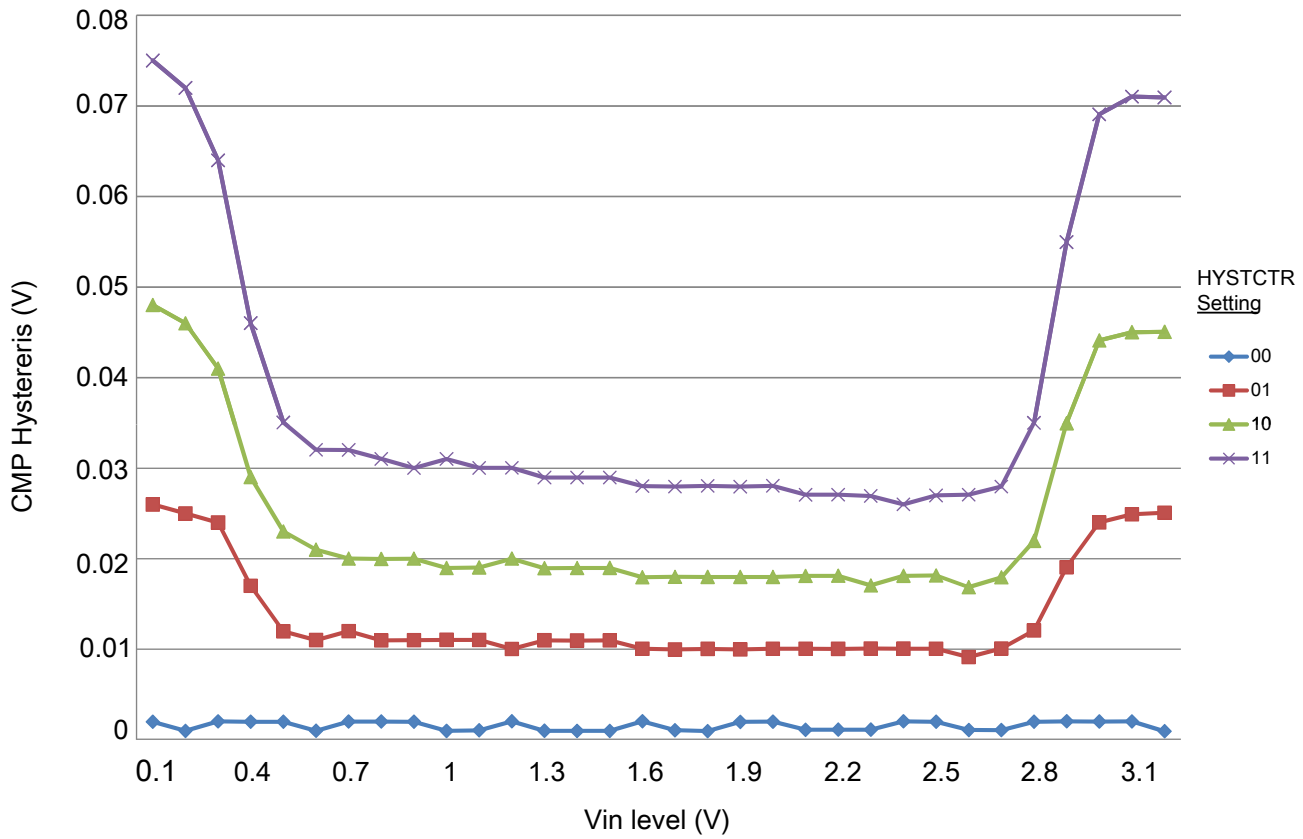

Figure 27. Typical hysteresis vs. Vin level (VDD = 3.3 V, PMODE = 0)

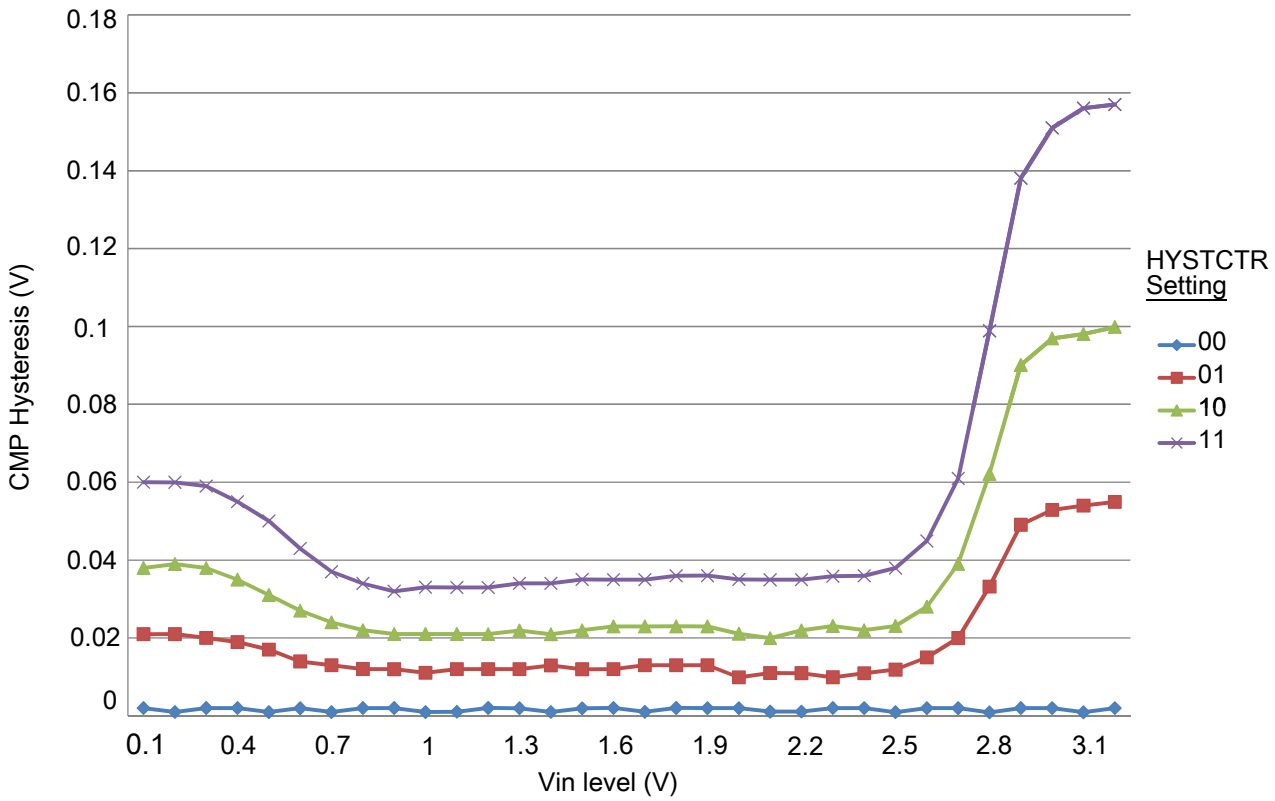

Figure 28. Typical hysteresis vs. Vin level (VDD = 3.3 V, PMODE = 1)

5.4 Timers

See General switching specifications.

5.5 Communication interfaces

5.5.1 SPI switching specifications

The Serial Peripheral Interface (SPI) provides a synchronous serial bus with master and slave operations. Many of the transfer attributes are programmable. The following tables provide timing characteristics for classic SPI timing modes. See the SPI chapter of the chip's Reference Manual for information about the modified transfer formats used for communicating with slower peripheral devices.

All timing is shown with respect to 20% V_{DD} and 80% V_{DD} thresholds, unless noted, as well as input signal transitions of 3 ns and a 30 pF maximum load on all SPI pins.

Table 60. SPI master mode timing on slew rate disabled pads

Num.	Symbol	Description	Min.	Max.	Unit	Note
1	f_{op}	Frequency of operation	$f_{periph}/2048$	$f_{periph}/2$	Hz	1
2	t_{SPSCK}	SPSCK period	2 x t_{periph}	2048 x t_{periph}	ns	2
3	t_{Lead}	Enable lead time	1/2	—	t_{SPSCK}	—
4	t_{Lag}	Enable lag time	1/2	—	t_{SPSCK}	—
5	t_{WSPSCK}	Clock (SPSCK) high or low time	t_{periph} - 30	1024 x t_{periph}	ns	—
6	t_{SU}	Data setup time (inputs)	18	—	ns	—
7	t_{HI}	Data hold time (inputs)	0	—	ns	—
8	t_v	Data valid (after SPSCK edge)	—	15	ns	—
9	t_{HO}	Data hold time (outputs)	0	—	ns	—
10	t_{RI}	Rise time input	—	t_{periph} - 25	ns	—
	t_{FI}	Fall time input				
11	t_{RO}	Rise time output	—	25	ns	—
	t_{FO}	Fall time output				

1. For SPI0 f_{periph} is the bus clock (f_{BUS}). For SPI1 f_{periph} is the system clock (f_{SYS}).
2. $t_{periph} = 1/f_{periph}$

Table 61. SPI master mode timing on slew rate enabled pads

Num.	Symbol	Description	Min.	Max.	Unit	Note
1	f_{op}	Frequency of operation	$f_{periph}/2048$	$f_{periph}/2$	Hz	1
2	t_{SPSCK}	SPSCK period	2 x t_{periph}	2048 x t_{periph}	ns	2
3	t_{Lead}	Enable lead time	1/2	—	t_{SPSCK}	—
4	t_{Lag}	Enable lag time	1/2	—	t_{SPSCK}	—
5	t_{WSPSCK}	Clock (SPSCK) high or low time	t_{periph} - 30	1024 x t_{periph}	ns	—
6	t_{SU}	Data setup time (inputs)	96	—	ns	—
7	t_{HI}	Data hold time (inputs)	0	—	ns	—
8	t_v	Data valid (after SPSCK edge)	—	52	ns	—
9	t_{HO}	Data hold time (outputs)	0	—	ns	—
10	t_{RI}	Rise time input	—	t_{periph} - 25	ns	—
	t_{FI}	Fall time input				
11	t_{RO}	Rise time output	—	36	ns	—
	t_{FO}	Fall time output				

1. For SPI0 f_{periph} is the bus clock (f_{BUS}). For SPI1 f_{periph} is the system clock (f_{SYS}).
2. $t_{periph} = 1/f_{periph}$

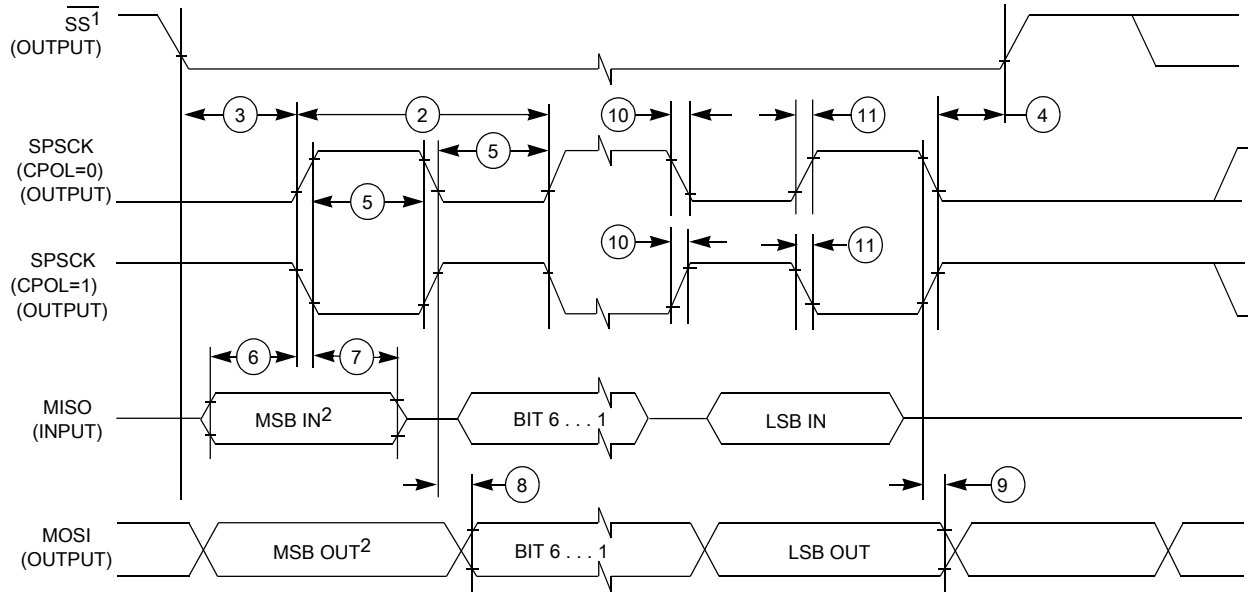

1. If configured as an output.
2. LSBF = 0. For LSBF = 1, bit order is LSB, bit 1, ..., bit 6, MSB.

Figure 29. SPI master mode timing (CPHA = 0)

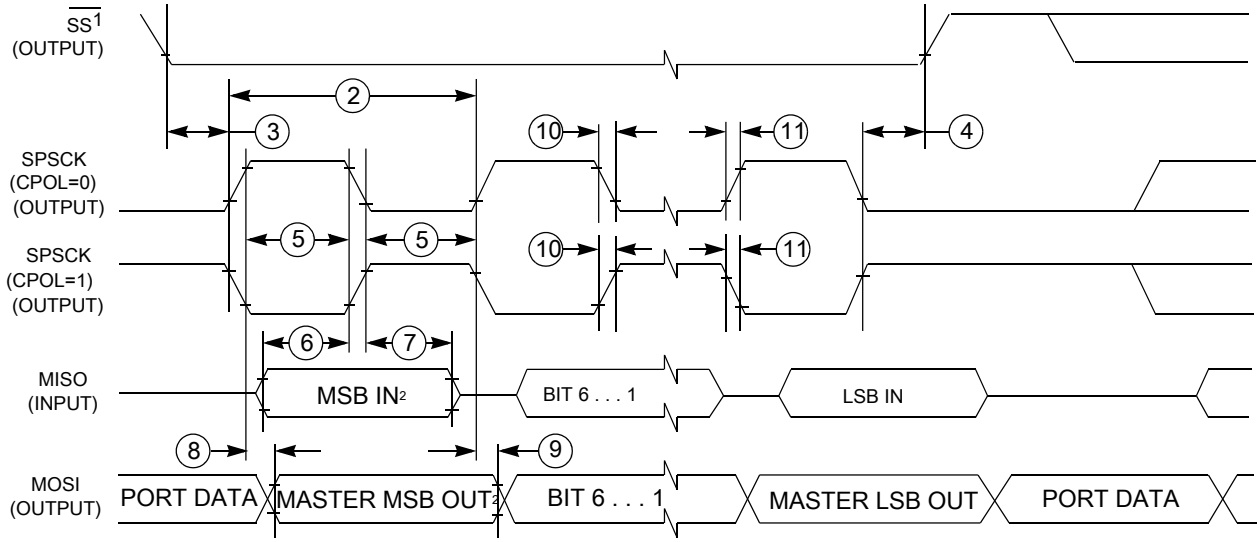

1.If configured as output
2. LSBF = 0. For LSBF = 1, bit order is LSB, bit 1, ..., bit 6, MSB.

Figure 30. SPI master mode timing (CPHA = 1)

Table 62. SPI slave mode timing on slew rate disabled pads

Num.	Symbol	Description	Min.	Max.	Unit	Note
1	f_{op}	Frequency of operation	0	$f_{periph}/4$	Hz	1
2	t_{SPSCK}	SPSCK period	4 x t_{periph}	—	ns	2
3	t_{Lead}	Enable lead time	1	—	t_{periph}	—

Table continues on the next page...

Table 62. SPI slave mode timing on slew rate disabled pads (continued)

Num.	Symbol	Description	Min.	Max.	Unit	Note
4	t_{Lag}	Enable lag time	1	—	t_{periph}	—
5	t_{WSPSCK}	Clock (SPSCK) high or low time	t_{periph} - 30	—	ns	—
6	t_{SU}	Data setup time (inputs)	2.5	—	ns	—
7	t_{HI}	Data hold time (inputs)	3.5	—	ns	—
8	t_a	Slave access time	—	t_{periph}	ns	3
9	t_{dis}	Slave MISO disable time	—	t_{periph}	ns	4
10	t_v	Data valid (after SPSCK edge)	—	31	ns	—
11	t_{HO}	Data hold time (outputs)	0	—	ns	—
12	t_{RI}	Rise time input	—	t_{periph} - 25	ns	—
	t_{FI}	Fall time input				
13	t_{RO}	Rise time output	—	25	ns	—
	t_{FO}	Fall time output				

1. For SPI0 f_{periph} is the bus clock (f_{BUS}). For SPI1 f_{periph} is the system clock (f_{SYS}).
2. $t_{periph} = 1/f_{periph}$
3. Time to data active from high-impedance state
4. Hold time to high-impedance state

Table 63. SPI slave mode timing on slew rate enabled pads

Num.	Symbol	Description	Min.	Max.	Unit	Note
1	f_{op}	Frequency of operation	0	$f_{periph}/4$	Hz	1
2	t_{SPSCK}	SPSCK period	4 x t_{periph}	—	ns	2
3	t_{Lead}	Enable lead time	1	—	t_{periph}	—
4	t_{Lag}	Enable lag time	1	—	t_{periph}	—
5	t_{WSPSCK}	Clock (SPSCK) high or low time	t_{periph} - 30	—	ns	—
6	t_{SU}	Data setup time (inputs)	2	—	ns	—
7	t_{HI}	Data hold time (inputs)	7	—	ns	—
8	t_a	Slave access time	—	t_{periph}	ns	3
9	t_{dis}	Slave MISO disable time	—	t_{periph}	ns	4
10	t_v	Data valid (after SPSCK edge)	—	122	ns	—
11	t_{HO}	Data hold time (outputs)	0	—	ns	—
12	t_{RI}	Rise time input	—	t_{periph} - 25	ns	—
	t_{FI}	Fall time input				
13	t_{RO}	Rise time output	—	36	ns	—
	t_{FO}	Fall time output				

1. For SPI0 f_{periph} is the bus clock (f_{BUS}). For SPI1 f_{periph} is the system clock (f_{SYS}).
2. $t_{periph} = 1/f_{periph}$
3. Time to data active from high-impedance state
4. Hold time to high-impedance state

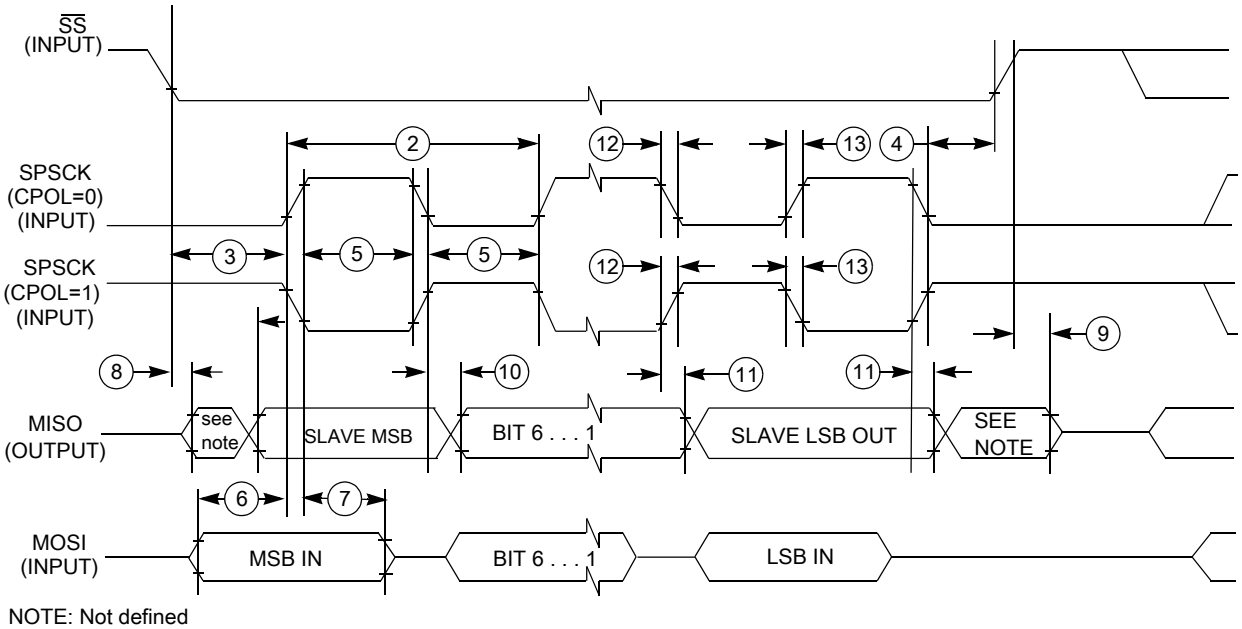

Figure 31. SPI slave mode timing (CPHA = 0)

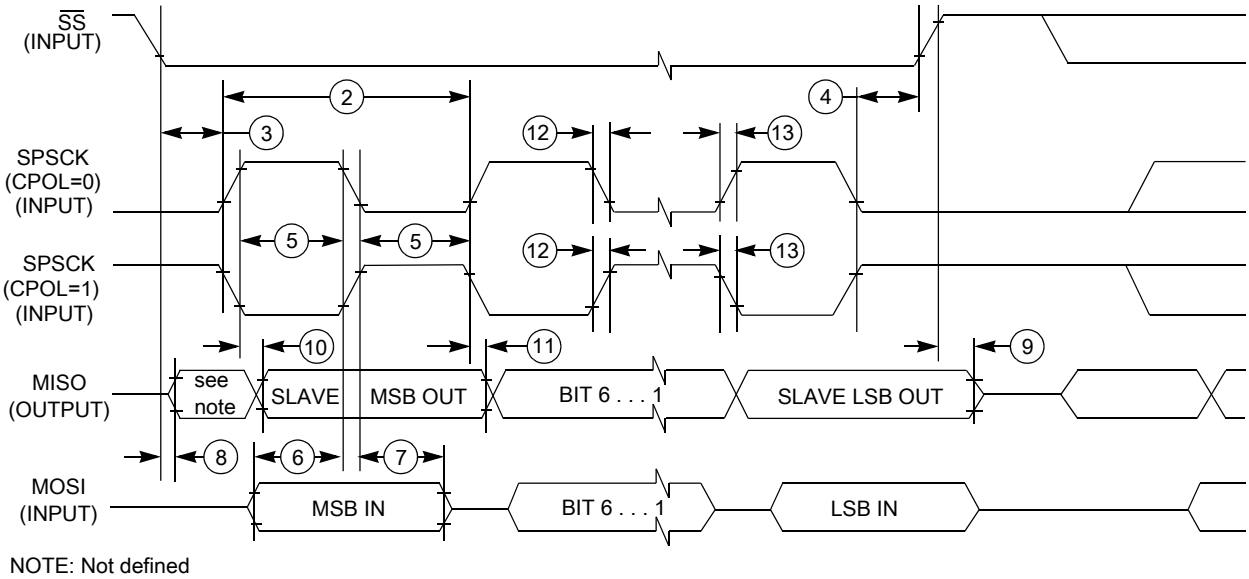

Figure 32. SPI slave mode timing (CPHA = 1)

5.5.2 Inter-Integrated Circuit Interface (I2C) timing

Table 64. I2C timing

Characteristic	Symbol	Standard Mode		Fast Mode		Unit
		Minimum	Maximum	Minimum	Maximum	
SCL Clock Frequency	f_{SCL}	0	100	0	400[1]	kHz
Hold time (repeated) START condition. After this period, the first clock pulse is generated.	t_{HD}; STA	4	—	0.6	—	μs
LOW period of the SCL clock	t_{LOW}	4.7	—	1.25	—	μs
HIGH period of the SCL clock	t_{HIGH}	4	—	0.6	—	μs
Set-up time for a repeated START condition	t_{SU}; STA	4.7	—	0.6	—	μs
Data hold time for I^2C bus devices	t_{HD}; DAT	0[2]	3.45[3]	0[4]	0.9[2]	μs
Data set-up time	t_{SU}; DAT	250[5]	—	100[3], [6]	—	ns
Rise time of SDA and SCL signals	t_r	—	1000	20 +0.1C_b[7]	300	ns
Fall time of SDA and SCL signals	t_f	—	300	20 +0.1C_b[6]	300	ns
Set-up time for STOP condition	t_{SU}; STO	4	—	0.6	—	μs
Bus free time between STOP and START condition	t_{BUF}	4.7	—	1.3	—	μs
Pulse width of spikes that must be suppressed by the input filter	t_{SP}	N/A	N/A	0	50	ns

1. The maximum SCL Clock Frequency in Fast mode with maximum bus loading can be achieved only when using the high drive pins across the full voltage range and when using the normal drive pins and VDD ≥ 2.7 V.
2. The master mode I^2C deasserts ACK of an address byte simultaneously with the falling edge of SCL. If no slaves acknowledge this address byte, then a negative hold time can result, depending on the edge rates of the SDA and SCL lines.
3. The maximum tHD; DAT must be met only if the device does not stretch the LOW period (tLOW) of the SCL signal.
4. Input signal Slew = 10 ns and Output Load = 50 pF
5. Set-up time in slave-transmitter mode is 1 IPBus clock period, if the TX FIFO is empty.
6. A Fast mode I^2C bus device can be used in a Standard mode I2C bus system, but the requirement $t_{SU;\,DAT} \geq 250$ ns must then be met. This is automatically the case if the device does not stretch the LOW period of the SCL signal. If such a device does stretch the LOW period of the SCL signal, then it must output the next data bit to the SDA line $t_{rmax} + t_{SU;\,DAT} = 1000 + 250 = 1250$ ns (according to the Standard mode I^2C bus specification) before the SCL line is released.
7. C_b = total capacitance of the one bus line in pF.

To achieve 1MHz I2C clock rates, consider the following recommendations:

- To counter the effects of clock stretching, the I2C baud Rate select bits can be configured for faster than desired baud rate.
- Use high drive pad and DSE bit should be set in PORTx_PCRn register.
- Minimize loading on the I2C SDA and SCL pins to ensure fastest rise times for the SCL line to avoid clock stretching.
- Use smaller pull up resistors on SDA and SCL to reduce the RC time constant.

Table 65. I ^{2}C 1Mbit/s timing

Characteristic	Symbol	Minimum	Maximum	Unit
SCL Clock Frequency	f_{SCL}	0	1[1]	MHz
Hold time (repeated) START condition. After this period, the first clock pulse is generated.	t_{HD}; STA	0.26	—	μs
LOW period of the SCL clock	t_{LOW}	0.5	—	μs
HIGH period of the SCL clock	t_{HIGH}	0.26	—	μs
Set-up time for a repeated START condition	t_{SU}; STA	0.26	—	μs
Data hold time for I_2C bus devices	t_{HD}; DAT	0	—	μs
Data set-up time	t_{SU}; DAT	50	—	ns
Rise time of SDA and SCL signals	t_r	20 +0.1C_b	120	ns
Fall time of SDA and SCL signals	t_f	20 +0.1C_b[2]	120	ns
Set-up time for STOP condition	t_{SU}; STO	0.26	—	μs
Bus free time between STOP and START condition	t_{BUF}	0.5	—	μs
Pulse width of spikes that must be suppressed by the input filter	t_{SP}	0	50	ns

1. The maximum SCL clock frequency of 1 Mbit/s can support maximum bus loading when using the high drive pins across the full voltage range.
2. C_b = total capacitance of the one bus line in pF.

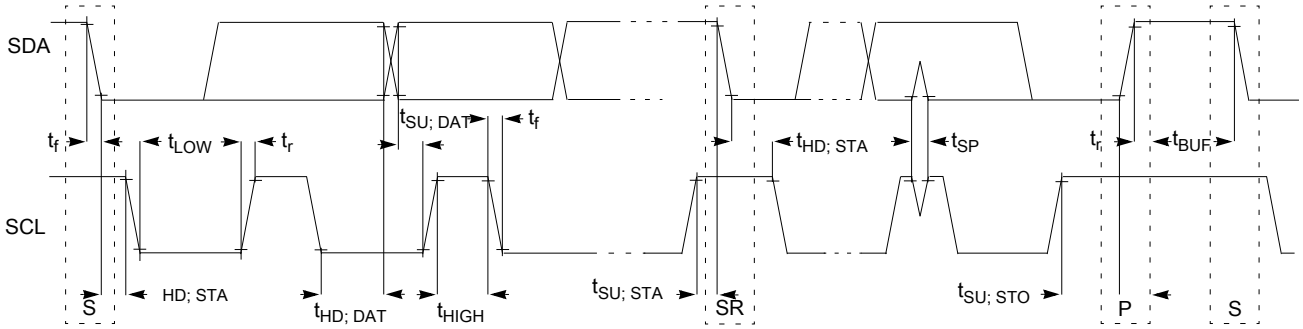

Figure 33. Timing definition for devices on the I^{2}C bus

5.5.3 UART

See General switching specifications.

6 Design considerations

6.1 Hardware design considerations

This device contains protective circuitry to guard against damage due to high static voltage or electric fields. However, take normal precautions to avoid application of any voltages higher than maximum-rated voltages to this high-impedance circuit.

6.1.1 Printed circuit board recommendations

- Place connectors or cables on one edge of the board and do not place digital circuits between connectors.
- Drivers and filters for I/O functions must be placed as close to the connectors as possible. Connect TVS devices at the connector to a good ground. Connect filter capacitors at the connector to a good ground.
- Physically isolate analog circuits from digital circuits if possible.
- Place input filter capacitors as close to the MCU as possible.
- For best EMC performance, route signals as transmission lines; use a ground plane directly under LQFP packages; and solder the exposed pad (EP) to ground directly under QFN packages.

6.1.2 Power delivery system

Consider the following items in the power delivery system:

- Use a plane for ground.
- Use a plane for MCU VDD supply if possible.
- Always route ground first, as a plane or continuous surface, and never as sequential segments.
- Route power next, as a plane or traces that are parallel to ground traces.
- Place bulk capacitance, 10 µF or more, at the entrance of the power plane.
- Place bypass capacitors for MCU power domain as close as possible to each VDD/VSS pair, including VDDA/VSSA and VREFH/VREFL.
- The minimum bypass requirement is to place 0.1 µF capacitors positioned as near as possible to the package supply pins.
- Take special care to minimize noise levels on the VREFH/VREFL inputs. An option is to use the internal reference voltage (output 1.2 V typically) as the ADC reference.

NOTE

The internal reference voltage output (VREFO) is bonded to the VREFH pin on some packages and to PTE30 on other packages. When the VREFO output is used, a 0.1 µF capacitor

is required as a filter. Do not connect any other supply voltage to the pin that has VREFO activated.

6.1.3 Analog design

Each ADC input must have an RC filter as shown in the following figure. The maximum value of R must be RAS max if fast sampling and high resolution are required. The value of C must be chosen to ensure that the RC time constant is very small compared to the sample period.

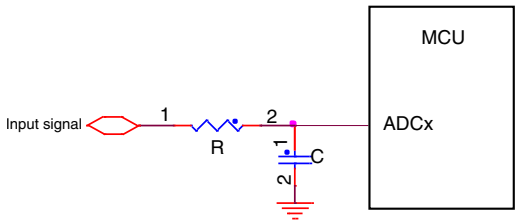

Figure 34. RC circuit for ADC input

High voltage measurement circuits require voltage division, current limiting, and over-voltage protection as shown the following figure. The voltage divider formed by R1 – R4 must yield a voltage less than or equal to VREFH. The current must be limited to less than the injection current limit. Since the ADC pins do not have diodes to VDD, external clamp diodes must be included to protect against transient over-voltages.

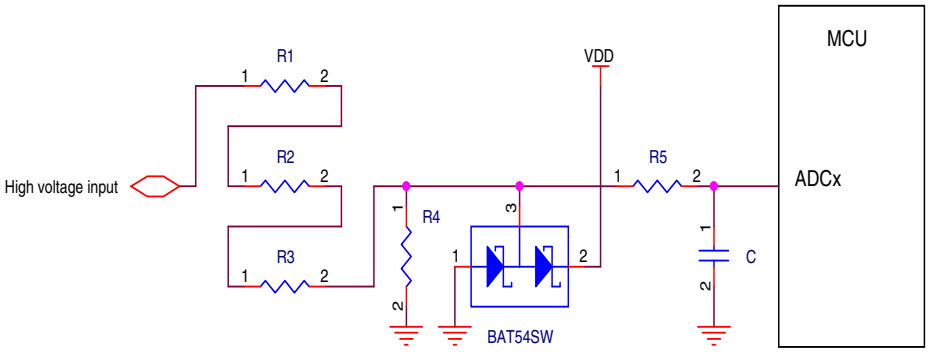

Figure 35. High voltage measurement with an ADC input

6.1.4 Digital design

Ensure that all I/O pins cannot get pulled above VDD (Max I/O is VDD+0.3V).

CAUTION

Do not provide power to I/O pins prior to VDD, especially the RESET_b pin.

- RESET_b pin

  The RESET_b pin is an open-drain I/O pin that has an internal pullup resistor. An external RC circuit is recommended to filter noise as shown in the following figure. The resistor value must be in the range of 4.7 kΩ to 10 kΩ; the recommended capacitance value is 0.1 µF. The RESET_b pin also has a selectable digital filter to reject spurious noise.

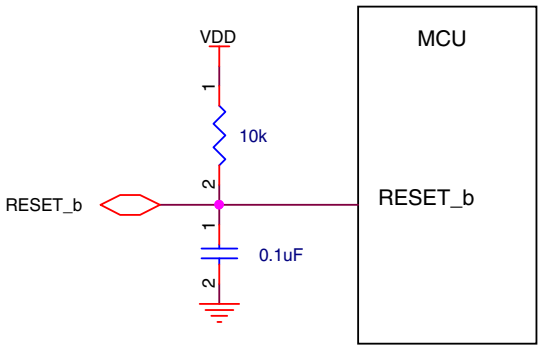

Figure 36. Reset circuit

When an external supervisor chip is connected to the RESET_b pin, a series resistor must be used to avoid damaging the supervisor chip or the RESET_b pin, as shown in the following figure. The series resistor value (RS below) must be in the range of 100 Ω to 1 kΩ depending on the external reset chip drive strength. The supervisor chip must have an active high, open-drain output.

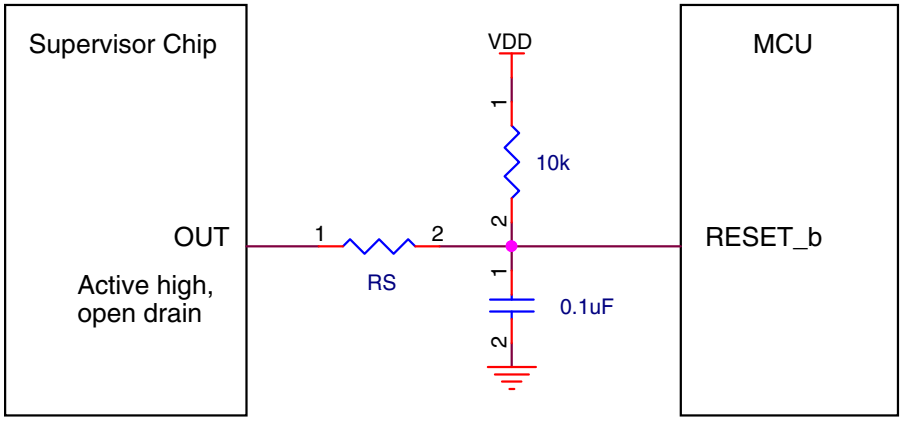

Figure 37. Reset signal connection to external reset chip

- NMI pin

  Do not add a pull-down resistor or capacitor on the NMI_b pin, because a low level on this pin will trigger non-maskable interrupt. When this pin is enabled as the NMI function, an external pull-up resistor (10 kΩ) as shown in the following figure is recommended for robustness.

  If the NMI_b pin is used as an I/O pin, the non-maskable interrupt handler is required to disable the NMI function by remapping to another function. The NMI function is disabled by programming the FOPT[NMI_DIS] bit to zero.

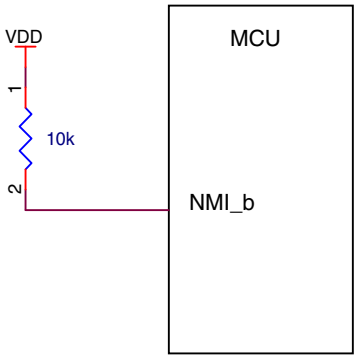

Figure 38. NMI pin biasing

- Debug interface

  This MCU uses the standard ARM SWD interface protocol as shown in the following figure. While pull-up or pull-down resistors are not required (SWD_DIO has an internal pull-up and SWD_CLK has an internal pull-down), external 10 kΩ pull resistors are recommended for system robustness. The RESET_b pin recommendations mentioned above must also be considered.

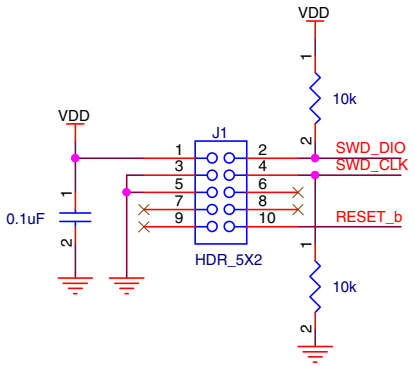

Figure 39. SWD debug interface

- Low leakage stop mode wakeup

  Select low leakage wakeup pins (LLWU_Px) to wake the MCU from one of the low leakage stop modes (LLS/VLLSx). See KL17 Signal Multiplexing and Pin Assignments for pin selection.

- Unused pin

  Unused GPIO pins must be left floating (no electrical connections) with the MUX field of the pin's PORTx_PCRn register equal to 0:0:0. This disables the digital input path to the MCU.

6.1.5 Crystal oscillator

When using an external crystal or ceramic resonator as the frequency reference for the MCU clock system, refer to the following table and diagrams.

The feedback resistor, RF, is incorporated internally with the low power oscillators. An external feedback is required when using high gain (HGO=1) mode.

The series resistor, RS, is required in high gain (HGO=1) mode when the crystal or resonator frequency is below 2MHz. Otherwise, the low power oscillator (HGO=0) must not have any series resistance; and the high frequency, high gain oscillator with a frequency above 2MHz does not require any series resistance.

Internal load capacitors (Cx, Cy) are provided in the low frequency (32.786kHz) mode. Use the SCxP bits in the OSC0_CR register to adjust the load capacitance for the crystal. Typically, values of 10pf to 16pF are sufficient for 32.768kHz crystals that have a 12.5pF CL specification. The internal load capacitor selection must not be used for high frequency crystals and resonators.

Table 66. External crystal/resonator connections

Oscillator mode	Oscillator mode
Low frequency (32.768kHz), low power	Diagram 1
Low frequency (32.768kHz), high gain	Diagram 2, Diagram 4
High frequency (1-32MHz), low power	Diagram 3
High frequency (1-32MHz), high gain	Diagram 4

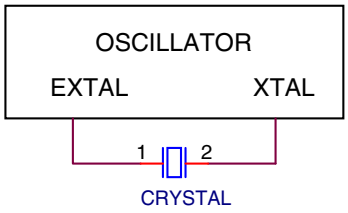

Figure 40. Crystal connection – Diagram 1

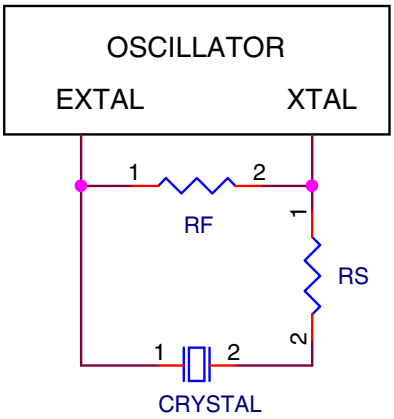

Figure 41. Crystal connection – Diagram 2

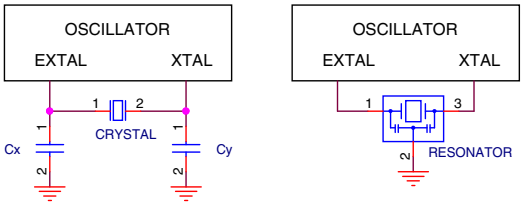

Figure 42. Crystal connection – Diagram 3

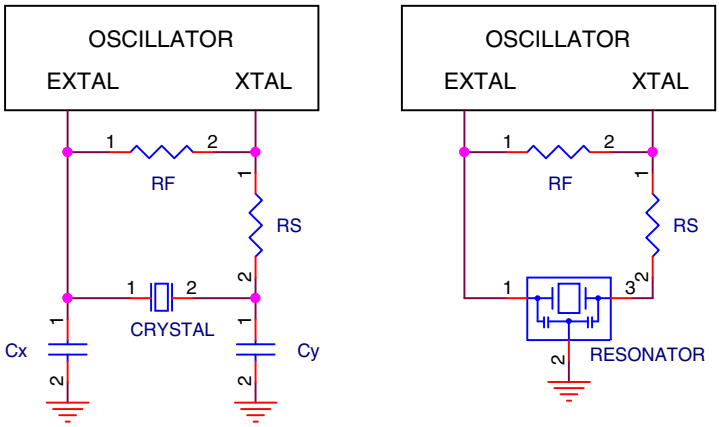

Figure 43. Crystal connection – Diagram 4

6.2 Software considerations

All Kinetis MCUs are supported by comprehensive Freescale and third-party hardware and software enablement solutions, which can reduce development costs and time to market. Featured software and tools are listed below. Visit http://www.freescale.com/kinetis/sw for more information and supporting collateral.

Evaluation and Prototyping Hardware

- Freescale Freedom Development Platform: http://www.freescale.com/freedom
- Tower System Development Platform: http://www.freescale.com/tower

IDEs for Kinetis MCUs

- Kinetis Design Studio IDE: http://www.freescale.com/kds
- Partner IDEs: http://www.freescale.com/kide

Development Tools

- PEG Graphics Software: http://www.freescale.com/peg
- Processor Expert Software and Embedded Components: http://www.freescale.com/processorexpert)

Run-time Software

- Kinetis SDK: http://www.freescale.com/ksdk
- Kinetis Bootloader: http://www.freescale.com/kboot
- ARM mbed Development Platform: http://www.freescale.com/mbed
- MQX RTOS: http://www.freescale.com/mqx

For all other partner-developed software and tools, visit http://www.freescale.com/partners.

7 Part identification

7.1 Description

Part numbers for the chip have fields that identify the specific part. You can use the values of these fields to determine the specific part you have received.

7.2 Format

Part numbers for this device have the following format:

Q KL## A FFF R T PP CC N

7.3 Fields

This table lists the possible values for each field in the part number (not all combinations are valid):

Table 67. Part number fields description

Field	Description	Values
Q	Qualification status	• M = Fully qualified, general market flow • P = Prequalification
KL##	Kinetis family	• KL17
A	Key attribute	• Z = Cortex-M0+
FFF	Program flash memory size	• 32 = 32 KB • 64 = 64 KB
R	Silicon revision	• (Blank) = Main • A = Revision after main
T	Temperature range (°C)	• V = –40 to 105
PP	Package identifier	• FM = 32 QFN (5 mm x 5 mm) • FT = 48 QFN (7 mm x 7 mm)[1] • LH = 64 LQFP (10 mm x 10 mm) • MP = 64 MAPBGA (5 mm x 5 mm)[1] • DA = 36 XFBGA (3.5 mm x 3.5 mm)
CC	Maximum CPU frequency (MHz)	• 4 = 48 MHz

Table continues on the next page...

Table 67. Part number fields description (continued)

Field	Description	Values
N	Packaging type	• R = Tape and reel • (Blank) = Trays

1. This package for this product is not yet available. However, it is included in Package Your Way program for Kinetis MCUs. Visit freescale.com/KPYW for more details.

7.4 Example

This is an example part number:

MKL17Z64VLH4

8 Revision history

The following table provides a revision history for this document.

Table 68. Revision history

Rev. No.	Date	Substantial Changes
4	28 January/ 2015	Initial public release • Updated the features and completed the ordering information. • Updated Table 9 - Power consumption operating behaviors with Max. values. • Added a note before Table 9. • Updated Table 17 - IRC48M specifications. • Updated Table 28. VREF full-range (-40 – 105 °C) operating behaviors with Min., Max., and Typical values. • Added Table 36 - I^2C 1Mbit/s timing.
4.1	2 February/ 2015	• Moved the ordering information out of the front page to be a separate chapter. • Added Module signal description table and Package dimension sections.
5	21 April/2015	• 32-pin QFN package is now standard part, added Marking information and thermal attributes of this package • Added Overview chapter • Added Memory map chapter • Added Pin properties • Added a note to the t_{rd1all} in Flash timing specifications — commands • Added a note to the Maximum of f_{SCL} in the fast mode in Inter-Integrated Circuit Interface (I2C) timing • Added a footnote to the Δfirc48m_ol_hv in MCG-Lite specifications • Added Design considerations chapter

How to Reach Us:

Home Page:
freescale.com

Web Support:
freescale.com/support

Information in this document is provided solely to enable system and software implementers to use Freescale products. There are no express or implied copyright licenses granted hereunder to design or fabricate any integrated circuits based on the information in this document. Freescale reserves the right to make changes without further notice to any products herein.

Freescale makes no warranty, representation, or guarantee regarding the suitability of its products for any particular purpose, nor does Freescale assume any liability arising out of the application or use of any product or circuit, and specifically disclaims any and all liability, including without limitation consequential or incidental damages. “Typical” parameters that may be provided in Freescale data sheets and/or specifications can and do vary in different applications, and actual performance may vary over time. All operating parameters, including “typicals,” must be validated for each customer application by customer's technical experts. Freescale does not convey any license under its patent rights nor the rights of others. Freescale sells products pursuant to standard terms and conditions of sale, which can be found at the following address: freescale.com/SalesTermsandConditions.

Freescale, Freescale logo, Energy Efficient Solutions logo, and Kinetis are trademarks of Freescale Semiconductor, Inc., Reg. U.S. Pat. & Tm. Off. All other product or service names are the property of their respective owners. ARM and Cortex are registered trademarks of ARM Limited (or its subsidiaries) in the EU and/or elsewhere. All rights reserved.

©2014-2015 Freescale Semiconductor, Inc.

Document Number KL17P64M48SF2
Revision 5, 04/2015

Общество с ограниченной ответственностью «МосЧип» ИНН 7719860671 / КПП 771901001
Адрес: 105318, г.Москва, ул.Щербаковская д.3, офис 1107

Данный компонент на территории Российской Федерации

Вы можете приобрести в компании MosChip.

Для оперативного оформления запроса Вам необходимо перейти по данной ссылке:

http://moschip.ru/get-element

Вы можете разместить у нас заказ для любого Вашего проекта, будь то серийное производство или разработка единичного прибора.

В нашем ассортименте представлены ведущие мировые производители активных и пассивных электронных компонентов.

Нашей специализацией является поставка электронной компонентной базы двойного назначения, продукции таких производителей как XILINX, Intel (ex.ALTERA), Vicor, Microchip, Texas Instruments, Analog Devices, Mini-Circuits, Amphenol, Glenair.

Сотрудничество с глобальными дистрибьюторами электронных компонентов, предоставляет возможность заказывать и получать с международных складов практически любой перечень компонентов в оптимальные для Вас сроки.

На всех этапах разработки и производства наши партнеры могут получить квалифицированную поддержку опытных инженеров.

Система менеджмента качества компании отвечает требованиям в соответствии с ГОСТ Р ИСО 9001, ГОСТ РВ 0015-002 и ЭС РД 009

Офис по работе с юридическими лицами:

105318, г.Москва, ул.Щербаковская д.3, офис 1107, 1118, ДЦ «Щербаковский»

Телефон: +7 495 668-12-70 (многоканальный)

Факс: +7 495 668-12-70 (доб.304)

E-mail: info@moschip.ru

Skype отдела продаж:
moschip.ru
moschip.ru_4
moschip.ru_6
moschip.ru_9