Charge Protection IC Series with Built-in FET

Negative Voltage Protection type

BD6046GUL

No.09031EAT02

●Descriptions

BD6046GUL protects the devices from the abnormal input voltage at the USB port.
Addition to the conventinal charge protection IC, it prevents the negative voltage happened by the USB reverse insertion without any additional compornents.
ROHM's original charge protection IC series enables to protect the abnormal input voltage from -30V to +30V.

●Features

1) Overvoltage Protection up to 28V
2) Negative Voltage Protection
3) Internal Low Ron (250mΩ) FET
4) Over voltage Lockout (OVLO)
5) Under voltage Lockout(UVLO)
6) Internal 2.5msec Startup Delay
7) Over Current Protect
8) Thermal Shut Down
9) Small package: VCSP50L2(2.5mm x 2.5mm, height=0.55mm)

●Applications

Mobile phones, MP3 players, Digital Still Camera, PDA, IC recorder, Electronic Dictionary, Handheld Game, Game Controller, Camcorder, Bluetooth Headsets, etc

●Absolute maximum ratings (Ta=25℃)

Parameter	Symbol	Rating	Unit	Conditions
Input supply voltage 1	Vmax1	-30～30	V	IN
Input supply voltage 2	Vmax2	-0.3～7	V	other
Power dissipation	Pd	975	mW	
Operating temperature range	Topr	-40～+85	℃	
Storage temperature range	Tstr	-55～+150	℃	

※ When using more than at Ta=25℃, it is reduced 7.8mW per 1℃.(ROHM specification board 50mm× 58mm mounting.)

●Recommended operating range (Ta=-40～+85℃)

Parameter	Symbol	Range	Unit	Usage
Input voltage range	V_{in}	2.2～28	V	

※ This product is not especially designed to be protected from radioactivity.

© 2009 ROHM Co., Ltd. All rights reserved.

●Electrical Characteristics

(Unless otherwise noted, Ta = 25°C, IN=5V)

Parameter	Symbol	Rating			Unit	Conditions
		Min.	Typ.	Max.		
○Electrical						
Input Voltage Range	VIN	-	-	28	V	
Supply Quiescent Current	ICC		35	70	μA	
Under Voltage Lockout	UVLO	3.42	3.6	3.78	V	IN=decreasing
Under Voltage Lockout Hysteresis	UVLOh	50	100	150	mV	IN=increasing
Over Voltage Lockout	OVLO	6.5	6.7	6.9	V	IN=increasing
Over Voltage Lockout Hysteresis	OVLOh	50	100	150	mV	IN=decreasing
Current limit	ILM	1.2	-	-	A	
Vin vs. Vout Res.	RON	-	250	300	mΩ	
FLGB Output Low Voltage	FLGBVO	-	-	400	mV	SINK=1mA
FLGB Leakage Current	FLGBleak	-	-	1	μA	
○Timings (Flgb pull up resistance 100kΩ)						
Start Up Delay	Ton	-	2.5	5	msec	
Output Turn Off Time	Toff	-	2	10	μsec	
Alert Delay	Tovp	-	1.5	10	μsec	

* This product is not especially designed to be protected from radioactivity.

●Block Diagram

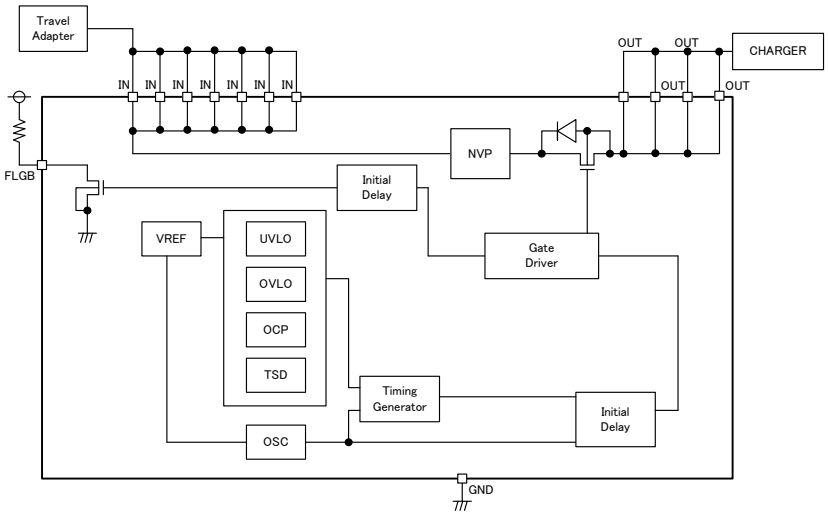

Fig. 1 Block Diagram

●PIN number / PIN name

Pin number	Pin name
A3, A4,B3, B4,C4, D3,D4	IN
A1, B1,C1, D1	OUT
D2	GND
A2	FLGB

© 2009 ROHM Co., Ltd. All rights reserved.

● **Package Dimensions**

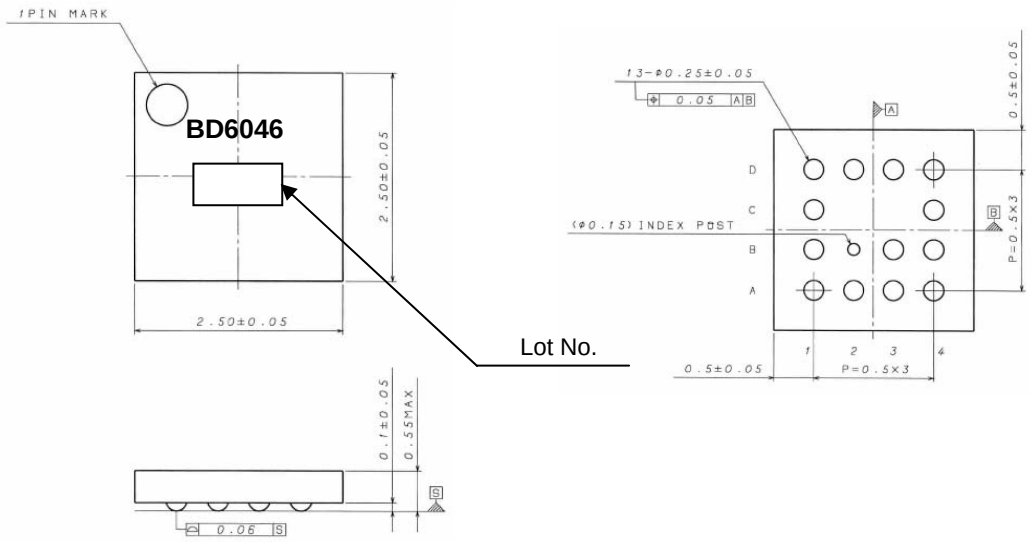

Fig. 2 Package Dimensions (VCSP50L2)

●**Ball Configuration**

Top View

	1	2	3	4
A	OUT	FLGB	IN	IN
B	OUT	index	IN	IN
C	OUT			IN
D	OUT	GND	IN	IN

Bottom View

	1	2	3	4
D	OUT	GND	IN	IN
C	OUT			IN
B	OUT	index	IN	IN
A	OUT	FLGB	IN	IN

Fig. 3 Ball Configuration

●**PIN DESCRIPTIONS**

PIN	NAME	FUNCTION
A3, A4, B3, B4, C4, D3, D4	IN	Input voltage Pin. A 1・F low ESR capacitor, or larger must be connected between this pin and GND
A1, B1, C1, D1	OUT	Output Voltage Pin
A2	FLGB	Open-drain output pin that turns low when any protection event occurs. (overvoltage protection, thermal shut down)
D2	GND	Ground Pin

© 2009 ROHM Co., Ltd. All rights reserved.

●Typical Application Circuit

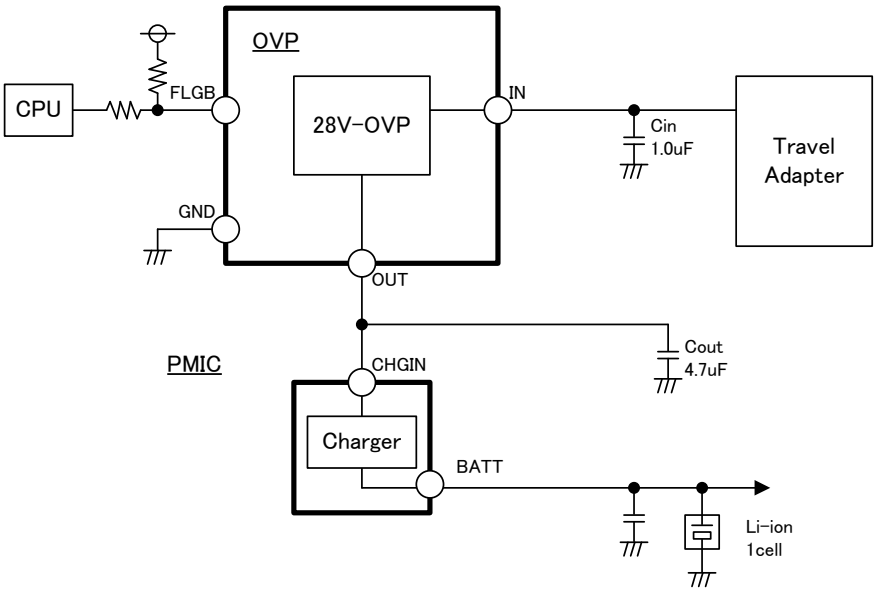

Fig. 4 Application Circuit

・Safety is high because it detects, and it protects it for an abnormal voltage up to 28V.
・It contributes to the miniaturization because all external is built into.

© 2009 ROHM Co., Ltd. All rights reserved.

●**Timing Diagram**

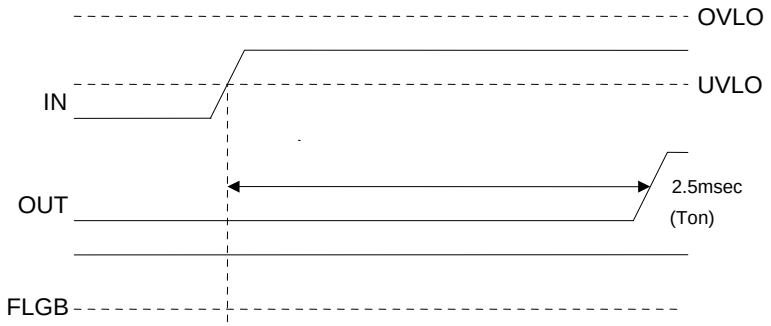

Fig. 5 Start up sequence

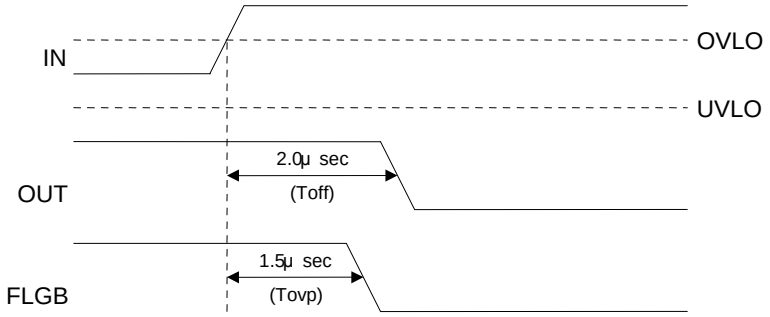

Fig. 6 Shutdown by over voltage detection

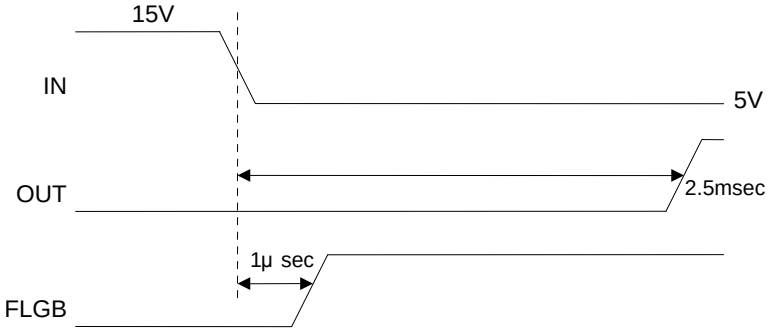

Fig. 7 Recovery from overvoltage protection

© 2009 ROHM Co., Ltd. All rights reserved.

●Notes foer use

(1) Absolute maximum ratings
If applied voltage (VDD, VIN), operating temperature range (Topr), or other absolute maximum ratings are exceeded, there is a risk of damage. Since it is not possible to identify short, open, or other damage modes, if special modes in which absolute maximum ratings are exceeded are assumed, consider applying fuses or other physical safety measures.

(2) Recommended operating range
This is the range within which it is possible to obtain roughly the expected characteristics. For electrical characteristics, it is those that are guaranteed under the conditions for each parameter. Even when these are within the recommended operating range, voltage and temperature characteristics are indicated.

(3) Reverse connection of power supply connector
There is a risk of damaging the LSI by reverse connection of the power supply connector. For protection from reverse connection, take measures such as externally placing a diode between the power supply and the power supply pin of the LSI.

(4) Power supply lines
In the design of the board pattern, make power supply and GND line wiring low impedance.
When doing so, although the digital power supply and analog power supply are the same potential, separate the digital power supply pattern and analog power supply pattern to deter digital noise from entering the analog power supply due to the common impedance of the wiring patterns. Similarly take pattern design into account for GND lines as well.
Furthermore, for all power supply pins of the LSI, in conjunction with inserting capacitors between power supply and GND pins, when using electrolytic capacitors, determine constants upon adequately confirming that capacitance loss occurring at low temperatures is not a problem for various characteristics of the capacitors used.

(5) GND voltage
Make the potential of a GND pin such that it will be the lowest potential even if operating below that. In addition, confirm that there are no pins for which the potential becomes less than a GND by actually including transition phenomena.

(6) Shorts between pins and misinstallation
When installing in the set board, pay adequate attention to orientation and placement discrepancies of the LSI. If it is installed erroneously, there is a risk of LSI damage. There also is a risk of damage if it is shorted by a foreign substance getting between pins or between a pin and a power supply or GND.

(7) Operation in strong magnetic fields
Be careful when using the LSI in a strong magnetic field, since it may malfunction.

(8) nspection in set board
When inspecting the LSI in the set board, since there is a risk of stress to the LSI when capacitors are connected to low impedance LSI pins, be sure to discharge for each process. Moreover, when getting it on and off of a jig in the inspection process, always connect it after turning off the power supply, perform the inspection, and remove it after turning off the power supply. Furthermore, as countermeasures against static electricity, use grounding in the assembly process and take appropriate care in transport and storage.

(9) Input pins
Parasitic elements inevitably are formed on an LSI structure due to potential relationships. Because parasitic elements operate, they give rise to interference with circuit operation and may be the cause of malfunctions as well as damage. Accordingly, take care not to apply a lower voltage than GND to an input pin or use the LSI in other ways such that parasitic elements operate. Moreover, do not apply a voltage to an input pin when the power supply voltage is not being applied to the LSI. Furthermore, when the power supply voltage is being applied, make each input pin a voltage less than the power supply voltage as well as within the guaranteed values of electrical characteristics.

(10) Ground wiring pattern
When there is a small signal GND and a large current GND, it is recommended that you separate the large current GND pattern and small signal GND pattern and provide single point grounding at the reference point of the set so that voltage variation due to resistance components of the pattern wiring and large currents do not cause the small signal GND voltage to change. Take care that the GND wiring pattern of externally attached components also does not change.

(11) Externally attached capacitors
When using ceramic capacitors for externally attached capacitors, determine constants upon taking into account a lowering of the rated capacitance due to DC bias and capacitance change due to factors such as temperature.

(12) Thermal shutdown circuit (TSD)
When the junction temperature reaches the defined value, the thermal shutdown circuit operates and turns a switch OFF. The thermal shutdown circuit, which is aimed at isolating the LSI from thermal runaway as much as possible, is not aimed at the protection or guarantee of the LSI. Therefore, do not continuously use the LSI with this circuit operating or use the LSI assuming its operation.

(13) Thermal design
Perform thermal design in which there are adequate margins by taking into account the permissible dissipation (Pd) in actual states of use.

© 2009 ROHM Co., Ltd. All rights reserved.

●Ordering part number

B	D	6	0	4	6	G	U	L	-	E	2

- Part No.
- Part No. BD6046
- Package GUL : VCSP50L2
- Packaging and forming specification E2: Embossed tape and reel

VCSP50L2(BD6046GUL)

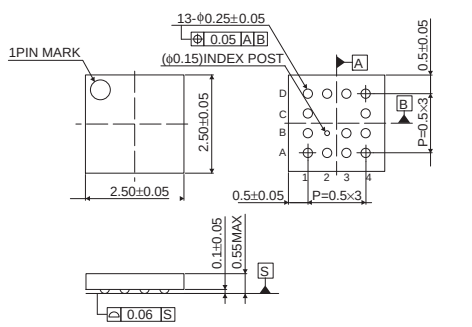

<Tape and Reel information>

Tape	Embossed carrier tape
Quantity	3000pcs
Direction of feed	E2 (The direction is the 1pin of product is at the upper left when you hold reel on the left hand and you pull out the tape on the right hand)

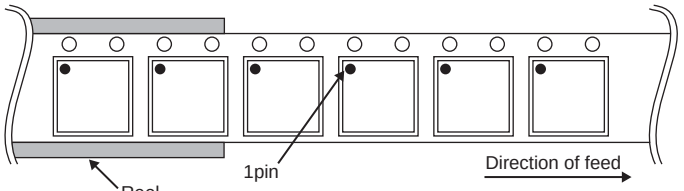

∗Order quantity needs to be multiple of the minimum quantity.

© 2009 ROHM Co., Ltd. All rights reserved.

Notes

No copying or reproduction of this document, in part or in whole, is permitted without the consent of ROHM Co.,Ltd.

The content specified herein is subject to change for improvement without notice.

The content specified herein is for the purpose of introducing ROHM's products (hereinafter "Products"). If you wish to use any such Product, please be sure to refer to the specifications, which can be obtained from ROHM upon request.

Examples of application circuits, circuit constants and any other information contained herein illustrate the standard usage and operations of the Products. The peripheral conditions must be taken into account when designing circuits for mass production.

Great care was taken in ensuring the accuracy of the information specified in this document. However, should you incur any damage arising from any inaccuracy or misprint of such information, ROHM shall bear no responsibility for such damage.

The technical information specified herein is intended only to show the typical functions of and examples of application circuits for the Products. ROHM does not grant you, explicitly or implicitly, any license to use or exercise intellectual property or other rights held by ROHM and other parties. ROHM shall bear no responsibility whatsoever for any dispute arising from the use of such technical information.

The Products specified in this document are intended to be used with general-use electronic equipment or devices (such as audio visual equipment, office-automation equipment, communication devices, electronic appliances and amusement devices).

The Products specified in this document are not designed to be radiation tolerant.

While ROHM always makes efforts to enhance the quality and reliability of its Products, a Product may fail or malfunction for a variety of reasons.

Please be sure to implement in your equipment using the Products safety measures to guard against the possibility of physical injury, fire or any other damage caused in the event of the failure of any Product, such as derating, redundancy, fire control and fail-safe designs. ROHM shall bear no responsibility whatsoever for your use of any Product outside of the prescribed scope or not in accordance with the instruction manual.

The Products are not designed or manufactured to be used with any equipment, device or system which requires an extremely high level of reliability the failure or malfunction of which may result in a direct threat to human life or create a risk of human injury (such as a medical instrument, transportation equipment, aerospace machinery, nuclear-reactor controller, fuel-controller or other safety device). ROHM shall bear no responsibility in any way for use of any of the Products for the above special purposes. If a Product is intended to be used for any such special purpose, please contact a ROHM sales representative before purchasing.

If you intend to export or ship overseas any Product or technology specified herein that may be controlled under the Foreign Exchange and the Foreign Trade Law, you will be required to obtain a license or permit under the Law.

ROHM SEMICONDUCTOR

Thank you for your accessing to ROHM product informations.
More detail product informations and catalogs are available, please contact us.

ROHM Customer Support System

http://www.rohm.com/contact/

© 2009 ROHM Co., Ltd. All rights reserved.

Общество с ограниченной ответственностью «МосЧип» ИНН 7719860671 / КПП 771901001
Адрес: 105318, г.Москва, ул.Щербаковская д.3, офис 1107

Данный компонент на территории Российской Федерации

Вы можете приобрести в компании MosChip.

Для оперативного оформления запроса Вам необходимо перейти по данной ссылке:

http://moschip.ru/get-element

Вы можете разместить у нас заказ для любого Вашего проекта, будь то серийное производство или разработка единичного прибора.

В нашем ассортименте представлены ведущие мировые производители активных и пассивных электронных компонентов.

Нашей специализацией является поставка электронной компонентной базы двойного назначения, продукции таких производителей как XILINX, Intel (ex.ALTERA), Vicor, Microchip, Texas Instruments, Analog Devices, Mini-Circuits, Amphenol, Glenair.

Сотрудничество с глобальными дистрибьюторами электронных компонентов, предоставляет возможность заказывать и получать с международных складов практически любой перечень компонентов в оптимальные для Вас сроки.

На всех этапах разработки и производства наши партнеры могут получить квалифицированную поддержку опытных инженеров.

Система менеджмента качества компании отвечает требованиям в соответствии с ГОСТ Р ИСО 9001, ГОСТ РВ 0015-002 и ЭС РД 009

Офис по работе с юридическими лицами:

105318, г.Москва, ул.Щербаковская д.3, офис 1107, 1118, ДЦ «Щербаковский»

Телефон: +7 495 668-12-70 (многоканальный)

Факс: +7 495 668-12-70 (доб.304)

E-mail: info@moschip.ru

Skype отдела продаж:
moschip.ru
moschip.ru_4
moschip.ru_6
moschip.ru_9