THIS DRAWING IS UNPUBLISHED. RELEASED FOR PUBLICATION - ,- .
© COPYRIGHT - By - ALL RIGHTS RESERVED.

LOC	DIST
GP	00

REVISIONS

P	LTR	DESCRIPTION	DATE	DWN	APVD
	C1	REVISED PER ECO-11-004835	11MAR11	RK	HMR

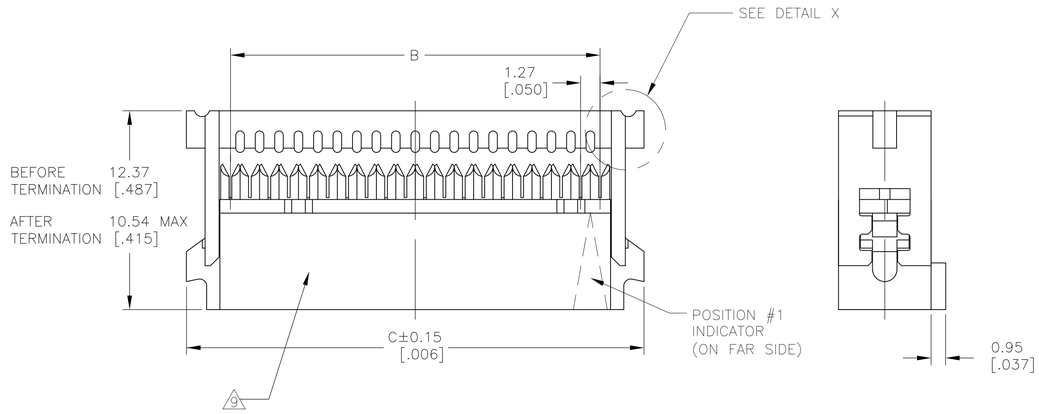

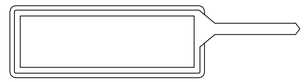

POLARIZING KEY
TYCO PART NUMBER: 1-1437023-2
T&B PART NUMBER (REF): 609-0000
PURCHASE SEPARATELY

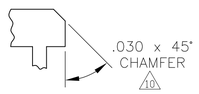

DETAIL X
SCALE 5:1

1. 20 POSITION CONNECTOR ASSEMBLY SHOWN.
2. MOLDED PARTS: THERMOPLASTIC, UL94V-0 RATED, COLOR BLUE. CONTACTS: BERYLLIUM COPPER.
3. CONTACTS: 0.00076[.000030] MIN GOLD ON MATING AREA, 0.00254-0.00508[.000100-.000200] BRIGHT TIN LEAD ON TERMINATION END, ALL OVER 0.00127[.000050] MIN NICKEL ON ENTIRE CONTACT.
4. CONTACTS: 0.00127[.000050] MIN GOLD ON MATING AREA, 0.00254-0.00508[.000100-.000200] BRIGHT TIN LEAD ON TERMINATION END, ALL OVER 0.00127[.000050] MIN NICKEL ON ENTIRE CONTACT.
5. POLARIZER FEATURE DOES NOT EXIST ON POSITION #1 END FOR 14 POSITION AND SMALLER ASSEMBLIES.
6. POLARIZER FEATURE DOES NOT EXIST ON THIS END FOR 6 POSITION ASSEMBLY.
7. FOR TERMINATION OF 28 OR 30 AWG STRANDED PVC INSULATED FLAT RIBBON CABLE.
8. STRAIN RELIEF PACKAGED SEPARATELY AND SHIPPED WITH ASSEMBLY.
9. DATE CODE STAMPED ON THIS SIDE OF CONNECTOR. 6 POSITION CONNECTORS EXCLUDED.
10. ALTERNATE COVER END APPLES TO INDICATED NUMBERS.
11. OBSOLETE PARTS: OBSOLETE CIS STREAMLINING PER D.RENAUD/D.SINISI

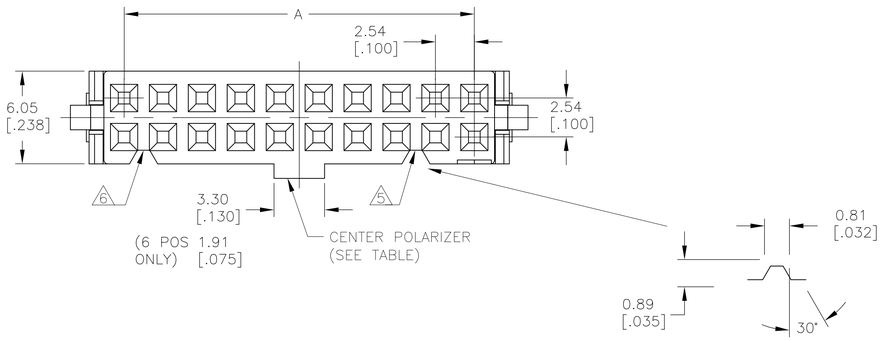

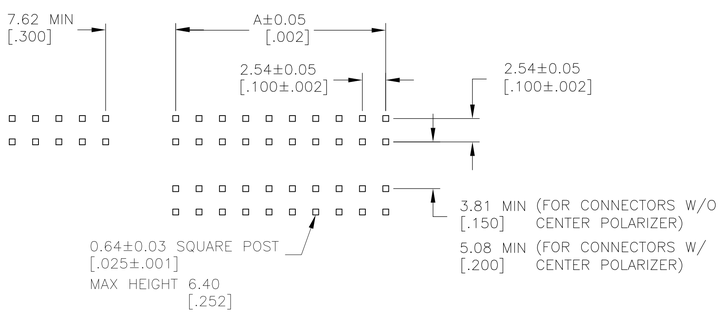

POST LAYOUT

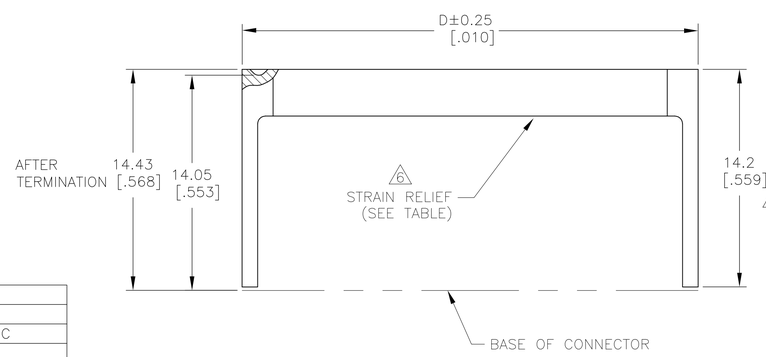

	STRAIN RELIEF	CENTER POLARIZER	CONTACT FINISH	D	C	B	A	NUMBER OF POSITIONS	T&B PART NUMBER (REFERENCE)	PART NUMBER
OBSOLETE	YES	YES	3	85.65[3.372]	85.75[3.376]	80.01[3.150]	78.74[3.100]	64	609-6441	1-1437022-5
OBSOLETE	NO	YES	3	–	85.75[3.376]	80.01[3.150]	78.74[3.100]	64	609-6430	1-1437022-2
SUPERSEDED BY 2-1658526-4	YES	YES	3	67.87[2.672]	67.97[2.676]	62.23[2.450]	60.96[2.400]	50	609-5041	8-1437021-3
SUPERSEDED BY 2-1658526-3	NO	YES	3	–	67.97[2.676]	62.23[2.450]	60.96[2.400]	50	609-5030	7-1437021-4
SUPERSEDED BY 2-1658526-2	YES	NO	3	67.87[2.672]	67.97[2.676]	62.23[2.450]	60.96[2.400]	50	609-5001M	7-1437021-1
11 SUPERSEDED BY 4-1658526-3	NO	NO	3	–	67.97[2.676]	62.23[2.450]	60.96[2.400]	50	609-5000M	~~6-1437021-8~~
SUPERSEDED BY 2-1658526-1	YES	YES	3	55.17[2.172]	55.27[2.176]	49.53[1.950]	48.26[1.900]	40	609-4041	5-1437021-7
SUPERSEDED BY 2-1658526-0	NO	YES	3	–	55.27[2.176]	49.53[1.950]	48.26[1.900]	40	609-4030	5-1437021-0
OBSOLETE	YES	NO	3	55.17[2.172]	55.27[2.176]	49.53[1.950]	48.26[1.900]	40	609-4001M	4-1437021-7
11 SUPERSEDED BY 4-1658526-1	NO	NO	3	–	55.27[2.176]	49.53[1.950]	48.26[1.900]	40	609-4000M	~~4-1437021-4~~
10 SUPERSEDED BY 4-1658526-0	YES	YES	3	50.09[1.972]	50.19[1.976]	44.45[1.750]	43.18[1.700]	36	609-3641	4-1437021-2
10 SUPERSEDED BY 3-1658526-8	NO	YES	3	–	50.19[1.976]	44.45[1.750]	43.18[1.700]	36	609-3630	4-1437021-0
	YES	YES	3	47.55[1.872]	47.65[1.876]	41.91[1.650]	40.64[1.600]	34	609-3441	3-1437021-4
	NO	YES	3	–	47.65[1.876]	41.91[1.650]	40.64[1.600]	34	609-3430	2-1437021-6
SUPERSEDED BY 1658623-8	YES	NO	3	47.55[1.872]	47.65[1.876]	41.91[1.650]	40.64[1.600]	34	609-3401M	2-1437021-2
OBSOLETE	NO	NO	3	–	47.65[1.876]	41.91[1.650]	40.64[1.600]	34	609-3400M	1-1437021-9
	YES	YES	3	37.39[1.472]	37.49[1.476]	31.75[1.250]	30.48[1.200]	26	609-2641	1-1437021-4
	NO	YES	3	–	37.49[1.476]	31.75[1.250]	30.48[1.200]	26	609-2630	1437021-5
SUPERSEDED BY 3-1658526-5	YES	NO	3	37.39[1.472]	37.49[1.476]	31.75[1.250]	30.48[1.200]	26	609-2601M	1437021-2
SUPERSEDED BY 3-1658526-5	NO	NO	3	–	37.49[1.476]	31.75[1.250]	30.48[1.200]	26	609-2600M	9-1437020-8
OBSOLETE	YES	YES	3	34.85[1.372]	34.95[1.376]	29.21[1.150]	27.94[1.100]	24	609-2441	9-1437020-6
SUPERSEDED BY 1-1658526-4	NO	YES	3	–	34.95[1.376]	29.21[1.150]	27.94[1.100]	24	609-2430	9-1437020-3
OBSOLETE	NO	NO	3	–	34.95[1.376]	29.21[1.150]	27.94[1.100]	24	609-2400M	9-1437020-1
	YES	YES	3	29.77[1.172]	29.87[1.176]	24.13[.950]	22.86[.900]	20	609-2041	8-1437020-8
	NO	YES	3	–	29.87[1.176]	24.13[.950]	22.86[.900]	20	609-2030	7-1437020-9
SUPERSEDED BY 3-1658526-0	YES	NO	3	29.77[1.172]	29.87[1.176]	24.13[.950]	22.86[.900]	20	609-2001M	7-1437020-6
SUPERSEDED BY 3-1658526-0	NO	NO	3	–	29.87[1.176]	24.13[.950]	22.86[.900]	20	609-2000M	7-1437020-2
11 SUPERSEDED BY 6-1437020-8	NO	NO	4	–	29.87[1.176]	24.13[.950]	22.86[.900]	20	609-2000MP005	~~7-1437020-3~~
	YES	YES	3	24.69[.972]	24.79[.976]	19.05[.750]	17.78[.700]	16	609-1641	6-1437020-8
	NO	YES	3	–	24.79[.976]	19.05[.750]	17.78[.700]	16	609-1630	6-1437020-1
SUPERSEDED BY 1-1658526-0	YES	NO	3	24.69[.972]	24.79[.976]	19.05[.750]	17.78[.700]	16	609-1601M	5-1437020-9
OBSOLETE	NO	NO	3	–	24.79[.976]	19.05[.750]	17.78[.700]	16	609-1600M	5-1437020-6
SUPERSEDED BY 1658526-9	YES	YES	3	22.15[.872]	22.25[.876]	16.51[.650]	15.24[.600]	14	609-1441	5-1437020-2
	NO	YES	3	–	22.25[.876]	16.51[.650]	15.24[.600]	14	609-1430	4-1437020-6
OBSOLETE	YES	NO	3	22.15[.872]	22.25[.876]	16.51[.650]	15.24[.600]	14	609-1401M	4-1437020-4
OBSOLETE	NO	NO	3	–	22.25[.876]	16.51[.650]	15.24[.600]	14	609-1400M	4-1437020-2
	YES	YES	3	17.07[.672]	17.07[.672]	11.43[.450]	10.16[.400]	10	609-1041	3-1437020-9
	NO	YES	3	–	17.17[.676]	11.43[.450]	10.16[.400]	10	609-1030	3-1437020-0
OBSOLETE	YES	NO	3	17.07[.672]	17.07[.672]	11.43[.450]	10.16[.400]	10	609-1001M	2-1437020-7
SUPERSEDED BY 1658526-3	NO	NO	3	–	17.17[.676]	11.43[.450]	10.16[.400]	10	609-1000M	2-1437020-4
10 SUPERSEDED BY 1658526-2	YES	YES	3	11.99[.472]	12.09[.476]	6.35[.250]	5.08[.200]	6	609-0641	2-1437020-2
10	NO	YES	3	–	12.09[.476]	6.35[.250]	5.08[.200]	6	609-0630	2-1437020-0
10 OBSOLETE	YES	NO	3	11.99[.472]	12.09[.476]	6.35[.250]	5.08[.200]	6	609-0601M	1-1437020-9
10 SUPERSEDED BY 2-1658526-5	NO	NO	3	–	12.09[.476]	6.35[.250]	5.08[.200]	6	609-0600M	1-1437020-8

ELECTRICAL PROPERTIES	
CURRENT RATING	1 AMP
INSULATION RESISTANCE	>1 x 10^9 OHMS @ 500 VDC
DWV	>500 VRMS AT SEA LEVEL
ENVIRONMENTAL PROPERTIES	
TEMPERATURE RATING	-55°C TO 125°C

THIS DRAWING IS A CONTROLLED DOCUMENT.

DIMENSIONS: INCHES

TOLERANCES UNLESS OTHERWISE SPECIFIED:
0 PLC ± –
1 PLC ± –
2 PLC ± –
3 PLC ± 0.13[.005]
4 PLC ± –
ANGLES ± –

MATERIAL 2

FINISH SEE TABLE

DWN J.GERACE 19AUG04
CHK C.ROHDE 19AUG04
APVD M.WALMSLEY 19AUG04

PRODUCT SPEC –
APPLICATION SPEC –
WEIGHT –

TE Connectivity

NAME CONNECTOR ASSEMBLY, FEMALE SOCKET TRANSITION –

SIZE A1 | CAGE CODE 00779 | DRAWING NO C-9-1437021-4 | RESTRICTED TO –

CUSTOMER DRAWING | SCALE 1:1 | SHEET 1 OF 1 | REV C1

4805 (3/11)

Общество с ограниченной ответственностью «МосЧип» ИНН 7719860671 / КПП 771901001
Адрес: 105318, г.Москва, ул.Щербаковская д.3, офис 1107

Данный компонент на территории Российской Федерации

Вы можете приобрести в компании MosChip.

Для оперативного оформления запроса Вам необходимо перейти по данной ссылке:

http://moschip.ru/get-element

Вы можете разместить у нас заказ для любого Вашего проекта, будь то серийное производство или разработка единичного прибора.

В нашем ассортименте представлены ведущие мировые производители активных и пассивных электронных компонентов.

Нашей специализацией является поставка электронной компонентной базы двойного назначения, продукции таких производителей как XILINX, Intel (ex.ALTERA), Vicor, Microchip, Texas Instruments, Analog Devices, Mini-Circuits, Amphenol, Glenair.

Сотрудничество с глобальными дистрибьюторами электронных компонентов, предоставляет возможность заказывать и получать с международных складов практически любой перечень компонентов в оптимальные для Вас сроки.

На всех этапах разработки и производства наши партнеры могут получить квалифицированную поддержку опытных инженеров.

Система менеджмента качества компании отвечает требованиям в соответствии с ГОСТ Р ИСО 9001, ГОСТ РВ 0015-002 и ЭС РД 009

Офис по работе с юридическими лицами:

105318, г.Москва, ул.Щербаковская д.3, офис 1107, 1118, ДЦ «Щербаковский»

Телефон: +7 495 668-12-70 (многоканальный)

Факс: +7 495 668-12-70 (доб.304)

E-mail: info@moschip.ru

Skype отдела продаж:
moschip.ru
moschip.ru_4
moschip.ru_6
moschip.ru_9