FAIRCHILD SEMICONDUCTOR®

January 2008

74AC125, 74ACT125
Quad Buffer with 3-STATE Outputs

Features

- I_{CC} reduced by 50%
- Outputs source/sink 24mA
- ACT125 has TTL-compatible outputs

General Description

The AC/ACT125 contains four independent non-inverting buffers with 3-STATE outputs.

Ordering Information

Order Number	Package Number	Package Description
74AC125SC	M14A	14-Lead Small Outline Integrated Circuit (SOIC), JEDEC MS-012, 0.150" Narrow
74AC125SJ	M14D	14-Lead Small Outline Package (SOP), EIAJ TYPE II, 5.3mm Wide
74AC125MTC	MTC14	14-Lead Thin Shrink Small Outline Package (TSSOP), JEDEC MO-153, 4.4mm Wide
74AC125PC	N14A	14-Lead Plastic Dual-In-Line Package (PDIP), JEDEC MS-001, 0.300" Wide
74ACT125SC	M14A	14-Lead Small Outline Integrated Circuit (SOIC), JEDEC MS-012, 0.150" Narrow
74ACT125SJ	M14D	14-Lead Small Outline Package (SOP), EIAJ TYPE II, 5.3mm Wide
74ACT125MTC	MTC14	14-Lead Thin Shrink Small Outline Package (TSSOP), JEDEC MO-153, 4.4mm Wide
74ACT125PC	N14A	14-Lead Plastic Dual-In-Line Package (PDIP), JEDEC MS-001, 0.300" Wide

Device also available in Tape and Reel. Specify by appending suffix letter “X” to the ordering number.

All packages are lead free per JEDEC: J-STD-020B standard.

Connection Diagram

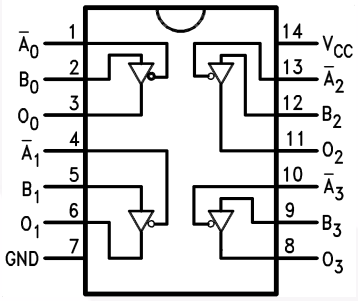

Logic Symbol

IEEE/IEC

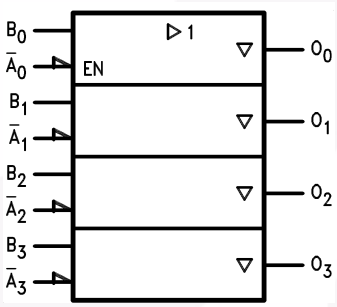

Pin Description

Pin Names	Description
$\bar{A}_n$, B_n	Inputs
O_n	Outputs

Function Table

Inputs		Output
A_n	B_n	O_n
L	L	L
L	H	H
H	X	Z

H = HIGH Voltage Level, L = LOW Voltage Level
Z = HIGH Impedance, X = Immaterial

©1988 Fairchild Semiconductor Corporation

Absolute Maximum Ratings

Stresses exceeding the absolute maximum ratings may damage the device. The device may not function or be operable above the recommended operating conditions and stressing the parts to these levels is not recommended. In addition, extended exposure to stresses above the recommended operating conditions may affect device reliability. The absolute maximum ratings are stress ratings only.

Symbol	Parameter	Rating
V_{CC}	Supply Voltage	–0.5V to +7.0V
I_{IK}	DC Input Diode Current $V_I = –0.5V$	–20mA
	$V_I = V_{CC} + 0.5$	+20mA
V_I	DC Input Voltage	–0.5V to V_{CC} + 0.5V
I_{OK}	DC Output Diode Current $V_O = –0.5V$	–20mA
	$V_O = V_{CC} + 0.5V$	+20mA
V_O	DC Output Voltage	–0.5V to V_{CC} + 0.5V
I_O	DC Output Source or Sink Current	±50mA
I_{CC} or I_{GND}	DC V_{CC} or Ground Current per Output Pin	±50mA
T_{STG}	Storage Temperature	–65°C to +150°C
T_J	Junction Temperature	140°C

Recommended Operating Conditions

The Recommended Operating Conditions table defines the conditions for actual device operation. Recommended operating conditions are specified to ensure optimal performance to the datasheet specifications. Fairchild does not recommend exceeding them or designing to absolute maximum ratings.

Symbol	Parameter	Rating
V_{CC}	Supply Voltage AC	2.0V to 6.0V
	ACT	4.5V to 5.5V
V_I	Input Voltage	0V to V_{CC}
V_O	Output Voltage	0V to V_{CC}
T_A	Operating Temperature	–40°C to +85°C
$\Delta V / \Delta t$	Minimum Input Edge Rate, AC Devices: V_{IN} from 30% to 70% of V_{CC}, V_{CC} @ 3.3V, 4.5V, 5.5V	125mV/ns
$\Delta V / \Delta t$	Minimum Input Edge Rate, ACT Devices: V_{IN} from 0.8V to 2.0V, V_{CC} @ 4.5V, 5.5V	125mV/ns

DC Electrical Characteristics for AC

Symbol	Parameter	V_{CC} (V)	Conditions	T_A = +25°C Typ.	T_A = –40°C to +85°C Guaranteed Limits		Units
V_{IH}	Minimum HIGH Level Input Voltage	3.0	V_{OUT} = 0.1V or V_{CC} – 0.1V	1.5	2.1	2.1	V
		4.5		2.25	3.15	3.15	
		5.5		2.75	3.85	3.85	
V_{IL}	Maximum LOW Level Input Voltage	3.0	V_{OUT} = 0.1V or V_{CC} – 0.1V	1.5	0.9	0.9	V
		4.5		2.25	1.35	1.35	
		5.5		2.75	1.65	1.65	
V_{OH}	Minimum HIGH Level Output Voltage	3.0	I_{OUT} = –50μA	2.99	2.9	2.9	V
		4.5		4.49	4.4	4.4	
		5.5		5.49	5.4	5.4	
		3.0	$V_{IN} = V_{IL}$ or V_{IH}, I_{OH} = –12mA		2.56	2.46	
		4.5	$V_{IN} = V_{IL}$ or V_{IH}, I_{OH} = –24mA		3.86	3.76	
		5.5	$V_{IN} = V_{IL}$ or V_{IH}, I_{OH} = –24mA(1)		4.86	4.76	
V_{OL}	Maximum LOW Level Output Voltage	3.0	I_{OUT} = 50μA	0.002	0.1	0.1	V
		4.5		0.001	0.1	0.1	
		5.5		0.001	0.1	0.1	
		3.0	$V_{IN} = V_{IL}$ or V_{IH}, I_{OL} = 12mA		0.36	0.44	
		4.5	$V_{IN} = V_{IL}$ or V_{IH}, I_{OL} = 24mA		0.36	0.44	
		5.5	$V_{IN} = V_{IL}$ or V_{IH}, I_{OL} = 24mA(1)		0.36	0.44	
I_{IN}(3)	Maximum Input Leakage Current	5.5	$V_I = V_{CC}$, GND		±0.1	±1.0	μA
I_{OZ}	Maximum 3-STATE Current	5.5	V_I (OE) = V_{IL}, V_{IH}, $V_I = V_{CC}$, V_{GND}, $V_O = V_{CC}$, GND		±0.25	±2.5	μA
I_{OLD}	Minimum Dynamic Output Current(2)	5.5	V_{OLD} = 1.65V Max.			75	mA
I_{OHD}		5.5	V_{OHD} = 3.85V Min.			–75	mA
I_{CC}(3)	Maximum Quiescent Supply Current	5.5	$V_{IN} = V_{CC}$ or GND		4.0	40.0	μA

Notes:

1. All outputs loaded; thresholds on input associated with output under test.
2. Maximum test duration 2.0ms, one output loaded at a time.
3. I_{IN} and I_{CC} @ 3.0V are guaranteed to be less than or equal to the respective limit @ 5.5V V_{CC}.

DC Electrical Characteristics for ACT

Symbol	Parameter	V_{CC} (V)	Conditions	T_A = +25°C Typ.	T_A = –40°C to +85°C Guaranteed Limits		Units
V_{IH}	Minimum HIGH Level Input Voltage	4.5	V_{OUT} = 0.1V or V_{CC} – 0.1V	1.5	2.0	2.0	V
		5.5		1.5	2.0	2.0	
V_{IL}	Maximum LOW Level Input Voltage	4.5	V_{OUT} = 0.1V or V_{CC} – 0.1V	1.5	0.8	0.8	V
		5.5		1.5	0.8	0.8	
V_{OH}	Minimum HIGH Level Output Voltage	4.5	I_{OUT} = –50μA	4.49	4.4	4.4	V
		5.5		5.49	5.4	5.4	
		4.5	$V_{IN} = V_{IL}$ or V_{IH}, I_{OH} = –24mA		3.86	3.76	
		5.5	$V_{IN} = V_{IL}$ or V_{IH}, I_{OH} = –24mA(4)		4.86	4.76	
V_{OL}	Maximum LOW Level Output Voltage	4.5	I_{OUT} = 50μA	0.001	0.1	0.1	V
		5.5		0.001	0.1	0.1	
		4.5	$V_{IN} = V_{IL}$ or V_{IH}, I_{OL} = 24mA		0.36	0.44	
		5.5	$V_{IN} = V_{IL}$ or V_{IH}, I_{OL}= 24mA(4)		0.36	0.44	
I_{IN}	Maximum Input Leakage Current	5.5	$V_I = V_{CC}$, GND		±0.1	±1.0	μA
I_{OZ}	Maximum 3-STATE Current	5.5	$V_I = V_{IL}$, V_{IH}; $V_O = V_{CC}$, GND		±0.5	±5.0	μA
I_{CCT}	Maximum I_{CC}/Input	5.5	$V_I = V_{CC}$ – 2.1V(6)	0.6		1.5	mA
I_{OLD}	Minimum Dynamic Output Current(5)	5.5	V_{OLD} = 1.65V Max.			75	mA
I_{OHD}		5.5	V_{OHD} = 3.85V Min.			–75	mA
I_{CC}	Maximum Quiescent Supply Current	5.5	$V_{IN} = V_{CC}$ or GND		4.0	40.0	μA

Notes:

4. All outputs loaded; thresholds on input associated with output under test.
5. Maximum test duration 2.0ms, one output loaded at a time.
6. May be measured per the JEDEC Alternate Method.

AC Electrical Characteristics for AC

Symbol	Parameter	V_{CC} (V)[7]	T_A = +25°C, C_L = 50pF			T_A = –40°C to +85°C, C_L = 50pF		Units
			Min.	Typ.	Max.	Min.	Max.	
t_{PLH}	Propagation Delay, Data to Output	3.3	1.0	6.5	9.0	1.0	10.0	ns
		5.0	1.0	5.5	7.0	1.0	7.5	
t_{PHL}	Propagation Delay, Data to Output	3.3	1.0	6.5	9.0	1.0	10.0	ns
		5.0	1.0	5.0	7.0	1.0	7.5	
t_{PZH}	Output Enable Time	3.3	1.0	6.0	10.5	1.0	11.0	ns
		5.0	1.0	5.0	7.0	1.0	8.0	
t_{PZL}	Output Enable Time	3.3	1.0	7.5	10.0	1.0	11.0	ns
		5.0	1.0	5.5	8.0	1.0	8.5	
t_{PHZ}	Output Disable Time	3.3	1.0	7.5	10.0	1.0	10.5	ns
		5.0	1.0	6.5	9.0	1.0	9.5	
t_{PLZ}	Output Disable Time	3.3	1.0	7.5	10.5	1.0	11.5	ns
		5.0	1.0	6.5	9.0	1.0	9.5	

Note:

7. Voltage range 3.3 is 3.3V ± 0.3V. Voltage range 5.0 is 5.0V ± 0.5V.

AC Electrical Characteristics for ACT

Symbol	Parameter	V_{CC} (V)[8]	T_A = +25°C, C_L = 50pF			T_A = –40°C to +85°C, C_L = 50pF		Units
			Min.	Typ.	Max.	Min.	Max.	
t_{PLH}	Propagation Delay, Data to Output	5.0	1.0	6.5	9.0	1.0	10.0	ns
t_{PHL}	Propagation Delay, Data to Output	5.0	1.0	7.0	9.0	1.0	10.0	ns
t_{PZH}	Output Enable Time	5.0	1.0	6.0	8.5	1.0	9.5	ns
t_{PZL}	Output Enable Time	5.0	1.0	7.0	9.5	1.0	10.5	ns
t_{PHZ}	Output Disable Time	5.0	1.0	7.0	9.5	1.0	10.5	ns
t_{PLZ}	Output Disable Time	5.0	1.0	7.5	10.0	1.0	10.5	ns

Note:

8. Voltage Range 5.0 is 5.0V ± 0.5V.

Capacitance

Symbol	Parameter	Conditions	Typ.	Units
C_{IN}	Input Capacitance	V_{CC} = OPEN	4.5	pF
C_{PD}	Power Dissipation Capacitance	V_{CC} = 5.0V	45.0	pF

©1988 Fairchild Semiconductor Corporation

Physical Dimensions

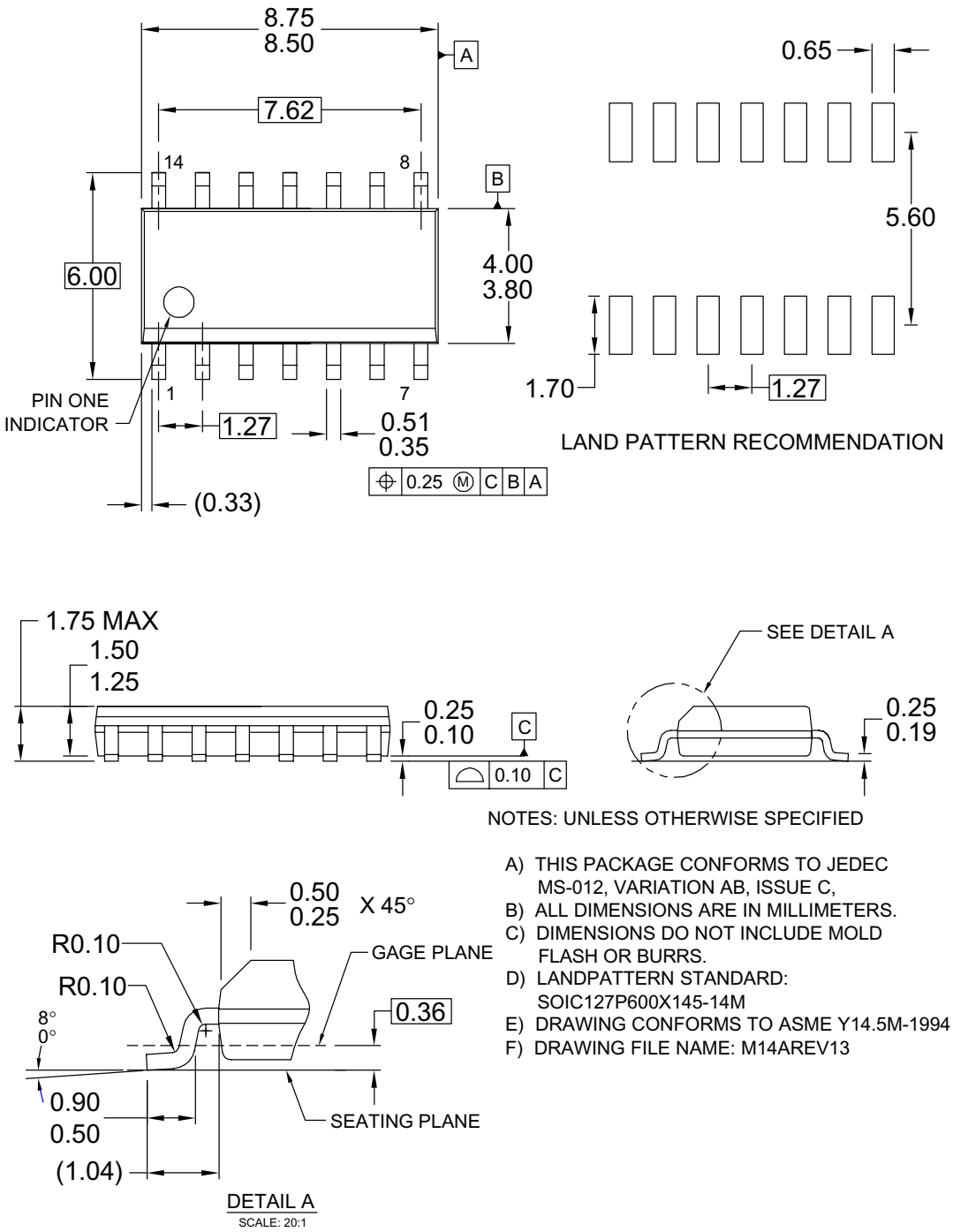

NOTES: UNLESS OTHERWISE SPECIFIED

A) THIS PACKAGE CONFORMS TO JEDEC MS-012, VARIATION AB, ISSUE C,
B) ALL DIMENSIONS ARE IN MILLIMETERS.
C) DIMENSIONS DO NOT INCLUDE MOLD FLASH OR BURRS.
D) LANDPATTERN STANDARD: SOIC127P600X145-14M
E) DRAWING CONFORMS TO ASME Y14.5M-1994
F) DRAWING FILE NAME: M14AREV13

Figure 1. 14-Lead Small Outline Integrated Circuit (SOIC), JEDEC MS-012, 0.150" Narrow

Package drawings are provided as a service to customers considering Fairchild components. Drawings may change in any manner without notice. Please note the revision and/or date on the drawing and contact a Fairchild Semiconductor representative to verify or obtain the most recent revision. Package specifications do not expand the terms of Fairchild's worldwide terms and conditions, specifically the warranty therein, which covers Fairchild products.

Always visit Fairchild Semiconductor's online packaging area for the most recent package drawings:

http://www.fairchildsemi.com/packaging/

Physical Dimensions (Continued)

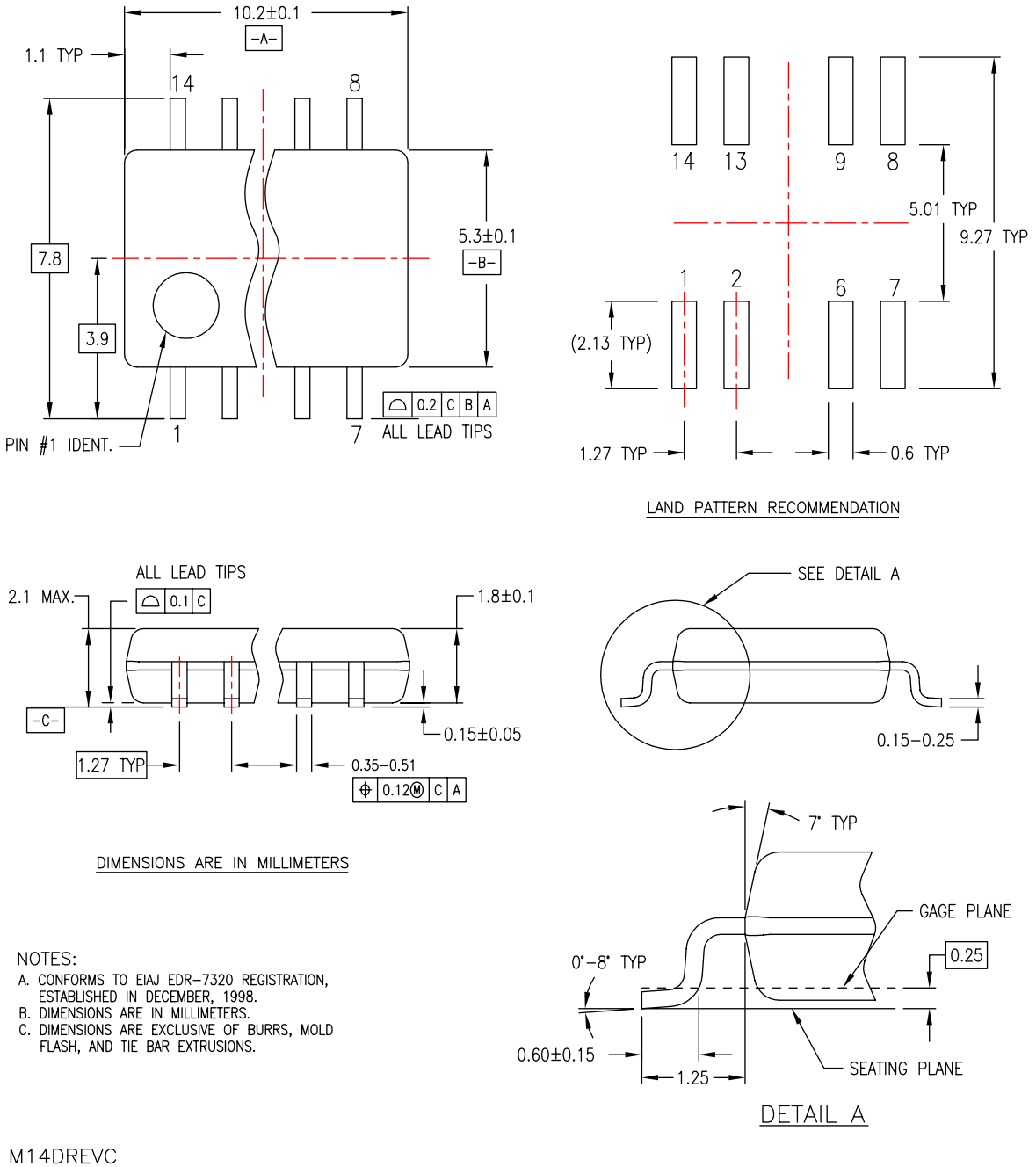

Figure 2. 14-Lead Small Outline Package (SOP), EIAJ TYPE II, 5.3mm Wide

Package drawings are provided as a service to customers considering Fairchild components. Drawings may change in any manner without notice. Please note the revision and/or date on the drawing and contact a Fairchild Semiconductor representative to verify or obtain the most recent revision. Package specifications do not expand the terms of Fairchild's worldwide terms and conditions, specifically the warranty therein, which covers Fairchild products.

Always visit Fairchild Semiconductor's online packaging area for the most recent package drawings:

http://www.fairchildsemi.com/packaging/

Physical Dimensions (Continued)

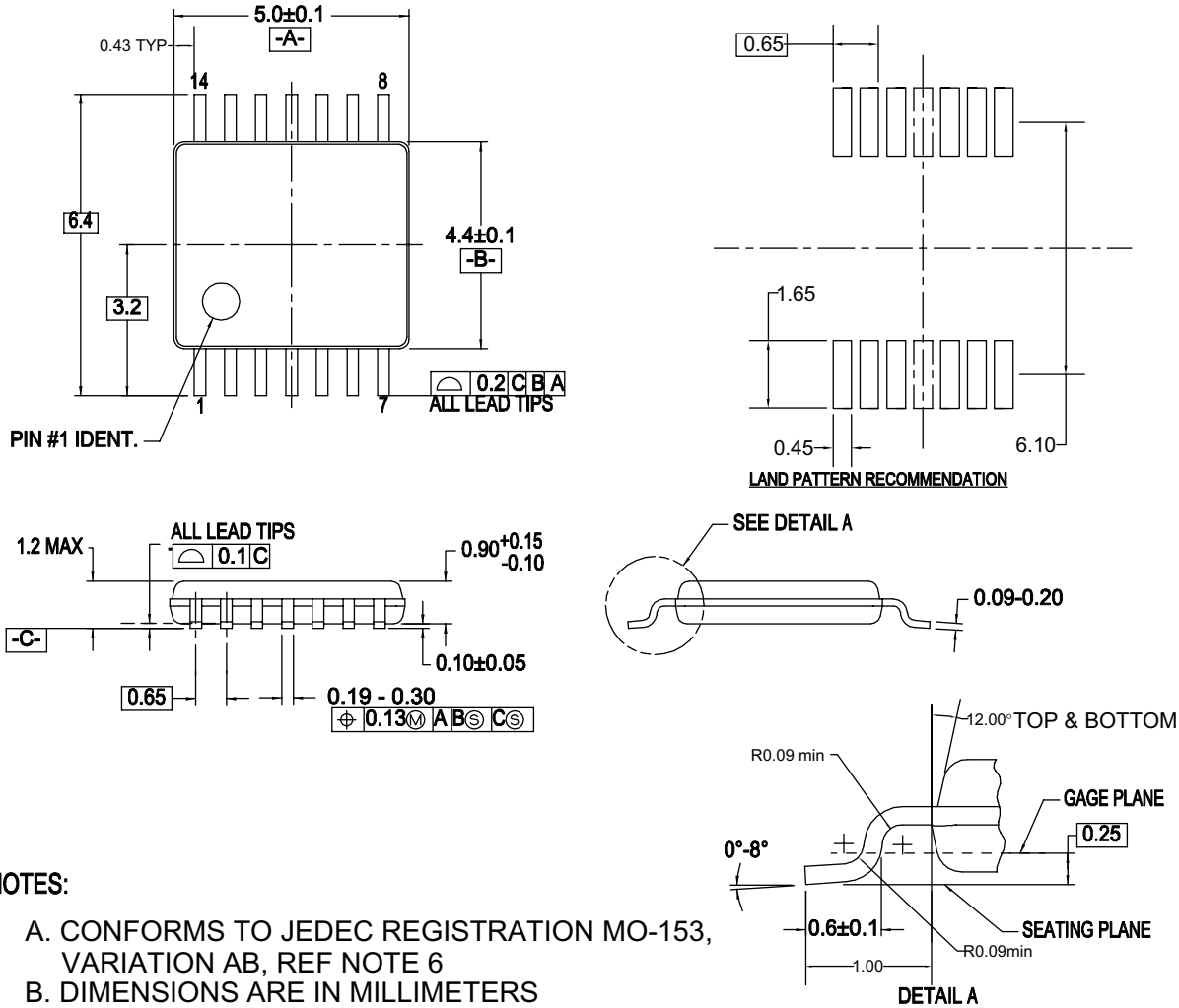

NOTES:

A. CONFORMS TO JEDEC REGISTRATION MO-153, VARIATION AB, REF NOTE 6

B. DIMENSIONS ARE IN MILLIMETERS

C. DIMENSIONS ARE EXCLUSIVE OF BURRS, MOLD FLASH, AND TIE BAR EXTRUSIONS

D. DIMENSIONING AND TOLERANCES PER ANSI Y14.5M, 1982

E. LANDPATTERN STANDARD: SOP65P640X110-14M

F. DRAWING FILE NAME: MTC14REV6

Figure 3. 14-Lead Thin Shrink Small Outline Package (TSSOP), JEDEC MO-153, 4.4mm Wide

Package drawings are provided as a service to customers considering Fairchild components. Drawings may change in any manner without notice. Please note the revision and/or date on the drawing and contact a Fairchild Semiconductor representative to verify or obtain the most recent revision. Package specifications do not expand the terms of Fairchild's worldwide terms and conditions, specifically the warranty therein, which covers Fairchild products.

Always visit Fairchild Semiconductor's online packaging area for the most recent package drawings:

http://www.fairchildsemi.com/packaging/

Physical Dimensions (Continued)

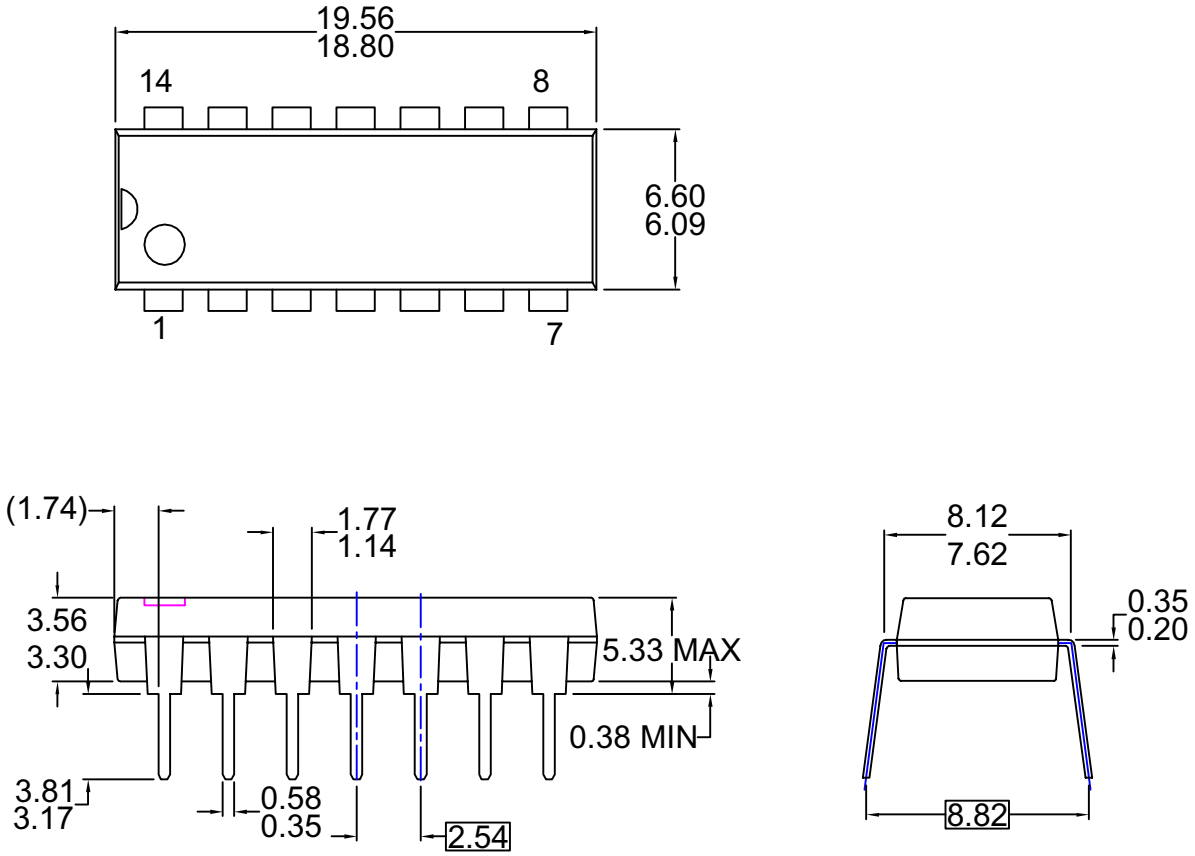

NOTES: UNLESS OTHERWISE SPECIFIED
THIS PACKAGE CONFORMS TO
A) JEDEC MS-001 VARIATION BA
B) ALL DIMENSIONS ARE IN MILLIMETERS.
DIMENSIONS ARE EXCLUSIVE OF BURRS,
C) MOLD FLASH, AND TIE BAR EXTRUSIONS.
D) DIMENSIONS AND TOLERANCES PER
ASME Y14.5-1994
E) DRAWING FILE NAME: MKT-N14AREV7

Figure 4. 14-Lead Plastic Dual-In-Line Package (PDIP), JEDEC MS-001, 0.300" Wide

Package drawings are provided as a service to customers considering Fairchild components. Drawings may change in any manner without notice. Please note the revision and/or date on the drawing and contact a Fairchild Semiconductor representative to verify or obtain the most recent revision. Package specifications do not expand the terms of Fairchild's worldwide terms and conditions, specifically the warranty therein, which covers Fairchild products.

Always visit Fairchild Semiconductor's online packaging area for the most recent package drawings:

http://www.fairchildsemi.com/packaging/

FAIRCHILD SEMICONDUCTOR®

TRADEMARKS

The following includes registered and unregistered trademarks and service marks, owned by Fairchild Semiconductor and/or its global subsidiaries, and is not intended to be an exhaustive list of all such trademarks.

ACEx®
Build it Now™
CorePLUS™
CROSSVOLT™
CTL™
Current Transfer Logic™
EcoSPARK®
EZSWITCH™ *
EZ™
F®
Fairchild®
Fairchild Semiconductor®
FACT Quiet Series™
FACT®
FAST®
FastvCore™
FlashWriter® *
FPS™
FRFET®
Global Power Resource℠
Green FPS™
Green FPS™ e-Series™
GTO™
i-Lo™
IntelliMAX™
ISOPLANAR™
MegaBuck™
MICROCOUPLER™
MicroFET™
MicroPak™
MillerDrive™
Motion-SPM™
OPTOLOGIC®
OPTOPLANAR®
PDP-SPM™
Power220®
Power247®
POWEREDGE®
Power-SPM™
PowerTrench®
Programmable Active Droop™
QFET®
QS™
QT Optoelectronics™
Quiet Series™
RapidConfigure™
SMART START™
SPM®
STEALTH™
SuperFET™
SuperSOT™-3
SuperSOT™-6
SuperSOT™-8
SyncFET™
SYSTEM GENERAL®
The Power Franchise®
the power franchise
TinyBoost™
TinyBuck™
TinyLogic®
TINYOPTO™
TinyPower™
TinyPWM™
TinyWire™
µSerDes™
UHC®
Ultra FRFET™
UniFET™
VCX™

* EZSWITCH™ and FlashWriter® are trademarks of System General Corporation, used under license by Fairchild Semiconductor.

DISCLAIMER

FAIRCHILD SEMICONDUCTOR RESERVES THE RIGHT TO MAKE CHANGES WITHOUT FURTHER NOTICE TO ANY PRODUCTS HEREIN TO IMPROVE RELIABILITY, FUNCTION, OR DESIGN. FAIRCHILD DOES NOT ASSUME ANY LIABILITY ARISING OUT OF THE APPLICATION OR USE OF ANY PRODUCT OR CIRCUIT DESCRIBED HEREIN; NEITHER DOES IT CONVEY ANY LICENSE UNDER ITS PATENT RIGHTS, NOR THE RIGHTS OF OTHERS. THESE SPECIFICATIONS DO NOT EXPAND THE TERMS OF FAIRCHILD'S WORLDWIDE TERMS AND CONDITIONS, SPECIFICALLY THE WARRANTY THEREIN, WHICH COVERS THESE PRODUCTS.

LIFE SUPPORT POLICY

FAIRCHILD'S PRODUCTS ARE NOT AUTHORIZED FOR USE AS CRITICAL COMPONENTS IN LIFE SUPPORT DEVICES OR SYSTEMS WITHOUT THE EXPRESS WRITTEN APPROVAL OF FAIRCHILD SEMICONDUCTOR CORPORATION.

As used herein:

1. Life support devices or systems are devices or systems which, (a) are intended for surgical implant into the body or (b) support or sustain life, and (c) whose failure to perform when properly used in accordance with instructions for use provided in the labeling, can be reasonably expected to result in a significant injury of the user.
2. A critical component in any component of a life support, device, or system whose failure to perform can be reasonably expected to cause the failure of the life support device or system, or to affect its safety or effectiveness.

PRODUCT STATUS DEFINITIONS

Definition of Terms

Datasheet Identification	Product Status	Definition
Advance Information	Formative or In Design	This datasheet contains the design specifications for product development. Specifications may change in any manner without notice.
Preliminary	First Production	This datasheet contains preliminary data; supplementary data will be published at a later date. Fairchild Semiconductor reserves the right to make changes at any time without notice to improve design.
No Identification Needed	Full Production	This datasheet contains final specifications. Fairchild Semiconductor reserves the right to make changes at any time without notice to improve the design.
Obsolete	Not In Production	This datasheet contains specifications on a product that has been discontinued by Fairchild Semiconductor. The datasheet is printed for reference information only.

Rev. I32

Общество с ограниченной ответственностью «МосЧип» ИНН 7719860671 / КПП 771901001
Адрес: 105318, г.Москва, ул.Щербаковская д.3, офис 1107

Данный компонент на территории Российской Федерации

Вы можете приобрести в компании MosChip.

Для оперативного оформления запроса Вам необходимо перейти по данной ссылке:

http://moschip.ru/get-element

Вы можете разместить у нас заказ для любого Вашего проекта, будь то серийное производство или разработка единичного прибора.

В нашем ассортименте представлены ведущие мировые производители активных и пассивных электронных компонентов.

Нашей специализацией является поставка электронной компонентной базы двойного назначения, продукции таких производителей как XILINX, Intel (ex.ALTERA), Vicor, Microchip, Texas Instruments, Analog Devices, Mini-Circuits, Amphenol, Glenair.

Сотрудничество с глобальными дистрибьюторами электронных компонентов, предоставляет возможность заказывать и получать с международных складов практически любой перечень компонентов в оптимальные для Вас сроки.

На всех этапах разработки и производства наши партнеры могут получить квалифицированную поддержку опытных инженеров.

Система менеджмента качества компании отвечает требованиям в соответствии с ГОСТ Р ИСО 9001, ГОСТ РВ 0015-002 и ЭС РД 009

Офис по работе с юридическими лицами:

105318, г.Москва, ул.Щербаковская д.3, офис 1107, 1118, ДЦ «Щербаковский»

Телефон: +7 495 668-12-70 (многоканальный)

Факс: +7 495 668-12-70 (доб.304)

E-mail: info@moschip.ru

Skype отдела продаж:
moschip.ru
moschip.ru_4
moschip.ru_6
moschip.ru_9