Important notes about Classic Panel Mount Indicator Catalog Pages

SCROLL DOWN TO VIEW CATALOG PAGE

This catalog page is out-of-print and is used with the understanding that the information shown could be out-of-date. In many cases, part numbers shown on this page are discontinued. Most notably, many “Complete Assembly” parts, which consist of a cap and a base, can no longer be ordered by the 14-digit ordering code. To obtain these parts, please order the cap and base part numbers separately. This process provides the components contained with the original “Complete Assembly” part number.

All Dialight Classic Panel Mount Indicators need a leading 3-digit numerical series. In some cases, this catalog will show a 2-digit series. In this case, please add a leading zero. For example, 81-0211-300 becomes **0**81-0211-300.

Part numbers listed on Dialight catalog pages designate parts with Red lenses. For ordering lens colors other than red, consult the chart below. In most cases, the color is dictated by the 7th digit. For example, 095-093**2**-003 for a green cap.

Lens Colors	
1 - Red	5 - White
2 - Green	6 - Light Yellow
3 - Yellow	7 - Clear
4 - Blue	

Click here for a cross reference guide to assembly part numbers.

Click here to view Frequently Asked Questions concerning Panel Mount Indicators.

SCROLL DOWN TO VIEW CATALOG PAGE

PRESS-TO-TEST INDICATORS

MEET OR EXCEED REQUIREMENTS OF
MIL–L–7961B and MIL–L–3661
QPL APPROVAL: The products indicated have received Department of Defense certification and are listed as QPL approved.

PROVIDE POSITIVE SAFETY FACTORS

Positive safety factors are provided by patented built-in Press-To-Test indicators. Lamps can be checked instantly without removing them from their assembly.

A slight pressure on the lens holder of the assembly breaks the normal circuit and makes a test circuit, informing the operator as follows:

1. If the lamp LIGHTS when pressed in, it is proven satisfactory.
2. If the lamp FAILS TO LIGHT when pressed in, it is defective and must be replaced from the front of the panel.

Release of finger pressure restores the lens holder to operating position.

Press-To-Switch (4 terminal assemblies) are available with all indicators in this catalog. They are useful for remote control applications, as they permit closing the circuit to any local or remote device.

Typical Press-To-Test (3 terminal) and Press-To-Switch (4 terminal) circuit drawings are illustrated below.

Sub-Miniature, Miniature and **Large** Press-To-Test Indicators are available for mounting in 15/32", 5/8" and 1" clearance holes respectively. Only typical incandescent assemblies are listed in this catalog. Data on other Press-To-Test assemblies will be furnished on request.

Hot-stamped or engraved legends can be supplied on flat lenses only. Additional information will be furnished on request.

Typical 3 Terminal Press-To-Test Circuit

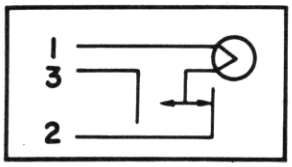

Typical 4 Terminal Press-To-Switch Circuit

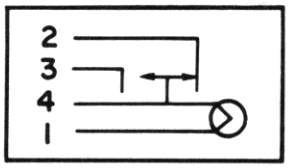

PATENTED SHUTTER DIMMING ACTION

Shutters open
Maximum full direct light beam

Shutters adjusted
Adjustable direct light beam

Shutters closed
Minimum indirect "halo" light

The patented shutter-dimming device is available on most Press-To-Test indicators. By turning the knurled cap, the individual operator can regulate the brilliancy of the light from the indicator to suit his needs under varying light conditions.

Standard dimmer action is clockwise. Assemblies with counter-clockwise dimming action are available on special order.

LENS COLORS

1–Red	5–White translucent
2–Green	6–Light yellow
3–Yellow (amber)	7–Clear colorless
4–Blue	

The digit before the last dash in the part number designates the lens color. When color other than RED is desired, change this digit to a figure noted above. Example: 812-1030-0972-506 (green)

Dialight reserves the right to make changes at anytime in order to improve design and to supply the best product possible.

Sub-Miniature Incandescent PRESS-TO-TEST Indicators

T-1¾ bulb with midget flange base.

See lamp ratings on page J.

For back of panel mounting in 15/32" clearance hole
Meet or exceed requirements of MIL–L–7961B and MIL–L–3661

MATERIALS AND FINISHES

- **Mounting Bushing:** Aluminum, black anodize finish.
- **Mounting and Flange Nuts:** Aluminum, black anodize finish.
- **Internal-tooth Lockwasher:** Phosphor bronze, white nickel finish.
- **Terminals:** Brass, hot tinned with elongated slot.

812 SERIES
813 SERIES

"Press-To-Test" marking is die-stamped and filled on the flange nut of 3 terminal units only. No marking is furnished on the hex flange nut for 4 terminal indicators.

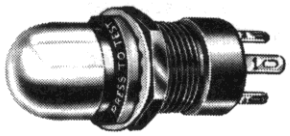

812-1030-0971-506

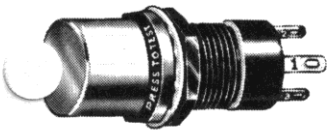

813-1030-1471-506

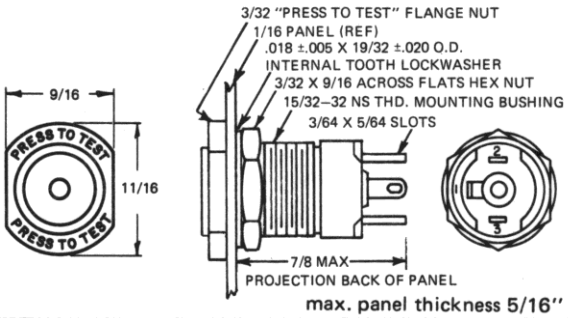

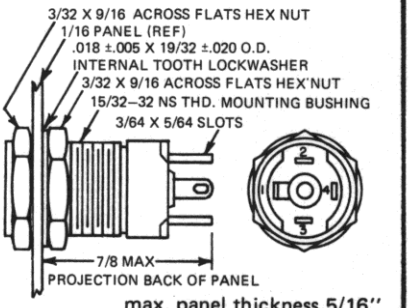

	3 Terminal Press-To-Test Assemblies	4 Terminal Press-To-Switch Assemblies
BASE PART NUMBER	812-1030-09-506	808-1130-03-504
CAP PART NUMBERS	**COMPLETE ASSEMBLY PART NUMBERS**	
STOVEPIPE 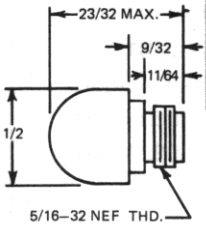 812-0971 translucent	812-1030-0971-506	812-1130-0971-504
812-0931 transparent	812-1030-0931-506	812-1130-0931-504
CYLINDRICAL 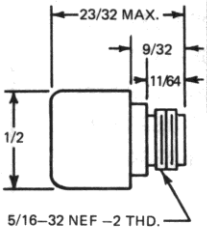 813-1471 translucent	813-1030-1471-506	813-1130-1471-504
813-1431 transparent	813-1030-1431-506	813-1130-1431-504

Order complete with lamp to be assured of receiving the indicator light and correct lamp together for immediate use.

Part numbers listed in this catalog designate products with Red lens. For ordering lens colors other than red, consult chart on page 2F.

Part numbers shown in gray are normally in inventory at your Dialight Distributor.

Общество с ограниченной ответственностью «МосЧип» ИНН 7719860671 / КПП 771901001
Адрес: 105318, г.Москва, ул.Щербаковская д.3, офис 1107

Данный компонент на территории Российской Федерации

Вы можете приобрести в компании MosChip.

Для оперативного оформления запроса Вам необходимо перейти по данной ссылке:

http://moschip.ru/get-element

Вы можете разместить у нас заказ для любого Вашего проекта, будь то серийное производство или разработка единичного прибора.

В нашем ассортименте представлены ведущие мировые производители активных и пассивных электронных компонентов.

Нашей специализацией является поставка электронной компонентной базы двойного назначения, продукции таких производителей как XILINX, Intel (ex.ALTERA), Vicor, Microchip, Texas Instruments, Analog Devices, Mini-Circuits, Amphenol, Glenair.

Сотрудничество с глобальными дистрибьюторами электронных компонентов, предоставляет возможность заказывать и получать с международных складов практически любой перечень компонентов в оптимальные для Вас сроки.

На всех этапах разработки и производства наши партнеры могут получить квалифицированную поддержку опытных инженеров.

Система менеджмента качества компании отвечает требованиям в соответствии с ГОСТ Р ИСО 9001, ГОСТ РВ 0015-002 и ЭС РД 009

Офис по работе с юридическими лицами:

105318, г.Москва, ул.Щербаковская д.3, офис 1107, 1118, ДЦ «Щербаковский»

Телефон: +7 495 668-12-70 (многоканальный)

Факс: +7 495 668-12-70 (доб.304)

E-mail: info@moschip.ru

Skype отдела продаж:
moschip.ru
moschip.ru_4
moschip.ru_6
moschip.ru_9