FAIRCHILD SEMICONDUCTOR®

March 2007

74ABT541
Octal Buffer/Line Driver with 3-STATE Outputs

Features

- Non-inverting buffers
- Output sink capability of 64mA, source capability of 32mA
- Guaranteed output skew
- Guaranteed multiple output switching specifications
- Output switching specified for both 50pF and 250pF loads
- Guaranteed simultaneous switching, noise level and dynamic threshold performance
- Guaranteed latchup protection
- High-impedance, glitch-free bus loading during entire power up and power down cycle
- Nondestructive, hot-insertion capability
- Flow-through pinout for ease of PC board layout
- Disable time less than enable time to avoid bus contention

General Description

The ABT541 is an octal buffer and line driver with 3-STATE outputs designed to be employed as a memory and address driver, clock driver, or bus-oriented transmitter/receiver. The ABT541 is similar to the ABT244 with broadside pinout.

Ordering Information

Order Number	Package Number	Package Description
74ABT541CSC	M20B	20-Lead Small Outline Integrated Circuit (SOIC), JEDEC MS-013, 0.300" Wide
74ABT541CSJ	M20D	20-Lead Small Outline Package (SOP), EIAJ TYPE II, 5.3mm Wide
74ABT541CMSA	MSA20	20-Lead Shrink Small Outline Package (SSOP), JEDEC MO-150, 5.3mm Wide
74ABT541CMTC	MTC20	20-Lead Thin Shrink Small Outline Package (TSSOP), JEDEC MO-153, 4.4mm Wide

Devices also available in Tape and Reel. Specify by appending suffix “X” to the ordering number.
Pb-Free package per JEDEC J-STD-020B.

Connection Diagram

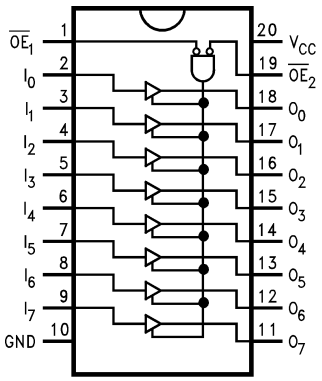

Pin Descriptions

Pin Names	Description
$\overline{OE}_1$, $\overline{OE}_2$	Output Enable Input (Active LOW)
I_0–I_7	Inputs
O_0–O_7	Outputs

©1992 Fairchild Semiconductor Corporation

Truth Table

Inputs			Outputs
$\overline{OE}_1$	$\overline{OE}_2$	I	
L	L	H	H
H	X	X	Z
X	H	X	Z
L	L	L	L

H = HIGH Voltage Level

L = LOW Voltage Level

X = Immaterial

Z = High Impedance

Absolute Maximum Ratings

Stresses exceeding the absolute maximum ratings may damage the device. The device may not function or be operable above the recommended operating conditions and stressing the parts to these levels is not recommended. In addition, extended exposure to stresses above the recommended operating conditions may affect device reliability. The absolute maximum ratings are stress ratings only.

Symbol	Parameter	Rating
T_{STG}	Storage Temperature	–65°C to +150°C
T_A	Ambient Temperature Under Bias	–55°C to +125°C
T_J	Junction Temperature Under Bias	–55°C to +150°C
V_{CC}	V_{CC} Pin Potential to Ground Pin	–0.5V to +7.0V
V_{IN}	Input Voltage(1)	–0.5V to +7.0V
I_{IN}	Input Current(1)	–30mA to +5.0mA
V_O	Voltage Applied to Any Output	
	Disabled or Power-Off State	–0.5V to 5.5V
	HIGH State	–0.5V to V_{CC}
	Current Applied to Output in LOW State (Max.)	twice the rated I_{OL} (mA)
	DC Latchup Source Current	–500mA
	Over Voltage Latchup (I/O)	10V

Note:

1. Either voltage limit or current limit is sufficient to protect inputs.

Recommended Operating Conditions

The Recommended Operating Conditions table defines the conditions for actual device operation. Recommended operating conditions are specified to ensure optimal performance to the datasheet specifications. Fairchild does not recommend exceeding them or designing to absolute maximum ratings.

Symbol	Parameter	Rating
T_A	Free Air Ambient Temperature	–40°C to +85°C
V_{CC}	Supply Voltage	+4.5V to +5.5V
$\Delta V / \Delta t$	Minimum Input Edge Rate	
	Data Input	50mV/ns
	Enable Input	20mV/ns

©1992 Fairchild Semiconductor Corporation

DC Electrical Characteristics

Symbol	Parameter		V_{CC}	Conditions	Min.	Typ.	Max.	Units
V_{IH}	Input HIGH Voltage			Recognized HIGH Signal	2.0			V
V_{IL}	Input LOW Voltage			Recognized LOW Signal			0.8	V
V_{CD}	Input Clamp Diode Voltage		Min.	I_{IN} = –18mA			–1.2	V
V_{OH}	Output HIGH Voltage		Min.	I_{OH} = –3mA	2.5			V
				I_{OH} = –32mA	2.0			V
V_{OL}	Output LOW Voltage		Min.	I_{OL} = 64mA			0.55	V
I_{IH}	Input HIGH Current		Max.	V_{IN} = 2.7V(3)			1	μA
				V_{IN} = V_{CC}			1	
I_{BVI}	Input HIGH Current Breakdown Test		Max.	V_{IN} = 7.0V			7	μA
I_{IL}	Input LOW Current		Max.	V_{IN} = 0.5V(3)			–1	μA
				V_{IN} = 0.0V			–1	
V_{ID}	Input Leakage Test		0.0	I_{ID} = 1.9μA, All Other Pins Grounded	4.75			V
I_{OZH}	Output Leakage Current		0–5.5V	V_{OUT} = 2.7V, $\overline{OE}_n$ = 2.0V			10	μA
I_{OZL}	Output Leakage Current		0–5.5V	V_{OUT} = 0.5V, $\overline{OE}_n$ = 2.0V			–10	μA
I_{OS}	Output Short-Circuit Current		Max.	V_{OUT} = 0.0V	–100		–275	mA
I_{CEX}	Output HIGH Leakage Current		Max.	V_{OUT} = V_{CC}			50	μA
I_{ZZ}	Bus Drainage Test		0.0	V_{OUT} = 5.5V, All Others GND			100	μA
I_{CCH}	Power Supply Current		Max.	All Outputs HIGH			50	μA
I_{CCL}	Power Supply Current		Max.	All Outputs LOW			30	mA
I_{CCZ}	Power Supply Current		Max.	$\overline{OE}_n$ = V_{CC}, All Others at V_{CC} or Ground			50	μA
I_{CCT}	Additional I_{CC}/Input	Outputs Enabled		V_I = V_{CC} – 2.1V			2.5	mA
		Outputs 3-STATE	Max.	Enable Input V_I = V_{CC} – 2.1V			2.5	mA
		Outputs 3-STATE		Data Input V_I = V_{CC} – 2.1V, All Others at V_{CC} or Ground			50	μA
I_{CCD}	Dynamic I_{CC} No Load(3)		Max	Outputs Open, $\overline{OE}_n$ = GND, One-Bit Toggling(2), 50% Duty Cycle			0.1	mA/MHz

Notes:

2. For 8-bit toggling, I_{CCD} < 0.8mA/MHz.
3. Guaranteed, but not tested.

DC Electrical Characteristics

SOIC package.

Symbol	Parameter	V_{CC}	Conditions $C_L = 50pF$, $R_L = 500\Omega$	Min.	Typ.	Max.	Units
V_{OLP}	Quiet Output Maximum Dynamic V_{OL}	5.0	$T_A = 25°C$(4)		0.7	1.0	V
V_{OLV}	Quiet Output Minimum Dynamic V_{OL}	5.0	$T_A = 25°C$(4)	–1.3	–0.8		V
V_{OHV}	Minimum HIGH Level Dynamic Output Voltage	5.0	$T_A = 25°C$(5)	2.7	3.1		V
V_{IHD}	Minimum HIGH Level Dynamic Input Voltage	5.0	$T_A = 25°C$(6)	2.0	1.4		V
V_{ILD}	Maximum LOW Level Dynamic Input Voltage	5.0	$T_A = 25°C$(6)		1.1	0.6	V

Notes:

4. Max number of outputs defined as (n). n – 1 data inputs are driven 0V to 3V. One output at LOW. Guaranteed, but not tested.
5. Max number of outputs defined as (n). n – 1 data inputs are driven 0V to 3V. One output HIGH. Guaranteed, but not tested.
6. Max number of data inputs (n) switching. n – 1 inputs switching 0V to 3V. Input-under-test switching: 3V to threshold (V_{ILD}), 0V to threshold (V_{IHD}). Guaranteed, but not tested.

AC Electrical Characteristics

SOIC and SSOP package.

Symbol	Parameter	$T_A = +25°C$, $V_{CC} = +5V$, $C_L = 50pF$			$T_A = –40°C$ to $+85°C$, $V_{CC} = 4.5V–5.5V$, $C_L = 50pF$		Units
		Min.	Typ.	Max.	Min.	Max.	
t_{PLH}	Propagation Delay, Data to Outputs	1.0	2.0	3.6	1.0	3.6	ns
t_{PHL}		1.0	2.4	3.6	1.0	3.6	
t_{PZH}	Output Enable Time	1.5	3.1	6.0	1.5	6.0	ns
t_{PZL}		1.5	3.7	6.0	1.5	6.0	
t_{PHZ}	Output Disable Time	1.7	3.5	6.1	1.7	6.1	ns
t_{PLZ}		1.7	3.1	5.6	1.7	5.6	

©1992 Fairchild Semiconductor Corporation

Extended AC Electrical Characteristics

SOIC package.

Symbol	Parameter	–40°C to +85°C, V_{CC} = 4.5V to 5.5V, C_L = 50pF, 8 Outputs Switching(7)			T_A = –40°C to +85°C, V_{CC} = 4.5V to 5.5V, C_L = 250pF, 1 Output Switching(8)		T_A = –40°C to +85°C, V_{CC} = 4.5V to 5.5V, C_L = 250pF, 8 Outputs Switching(9)		Units
		Min.	Typ.	Max.	Min.	Max.	Mi.n	Max.	
f_{TOGGLE}	Max Toggle Frequency		100						MHz
t_{PLH}	Propagation Delay, Data to Outputs	1.5		5.0	1.5	6.0	2.5	8.5	ns
t_{PHL}		1.5		5.0	1.5	6.0	2.5	8.5	
t_{PZH}	Output Enable Time	1.5		6.5	2.5	7.5	2.5	9.5	ns
t_{PZL}		1.5		6.5	2.5	7.5	2.5	10.5	
t_{PHZ}	Output Disable Time	1.0		6.1	(10)				ns
t_{PLZ}		1.0		5.6					

Notes:

7. This specification is guaranteed but not tested. The limits apply to propagation delays for all paths described switching in phase (i.e., all LOW-to-HIGH, HIGH-to-LOW, etc.).
8. This specification is guaranteed but not tested. The limits represent propagation delay with 250pF load capacitors in place of the 50pF load capacitors in the standard AC load. This specification pertains to single output switching only.
9. This specification is guaranteed but not tested. The limits represent propagation delays for all paths described switching in phase (i.e., all LOW-to-HIGH, HIGH-to-LOW, etc.) with 250pF load capacitors in place of the 50pF load capacitors in the standard AC load.
10. The 3-STATE delays are dominated by the RC network (500Ω, 250pF) on the output and have been excluded from the datasheet.

©1992 Fairchild Semiconductor Corporation

Skew

SOIC package.

Symbol	Parameter	T_A = –40°C to +85°C, V_{CC} = 4.5V to 5.5V, C_L = 50pF, 8 Outputs Switching(11)	T_A = –40°C to +85°C, V_{CC} = 4.5V to 5.5V, C_L = 250pF, 8 Outputs Switching(12)	Units
		Max.	Max.	
t_{OSHL}(13)	Pin to Pin Skew, HL Transitions	1.3	2.3	ns
t_{OSLH}(13)	Pin to Pin Skew, LH Transitions	1.0	1.8	ns
t_{PS}(14)	Duty Cycle, LH/HL Skew	2.0	3.5	ns
t_{OST}(13)	Pin to Pin Skew, LH/HL Transitions	2.0	3.5	ns
t_{PV}(15)	Device to Device Skew, LH/HL Transitions	2.0	3.5	ns

Notes:

11. This specification is guaranteed but not tested. The limits apply to propagation delays for all paths described switching in phase (i.e., all LOW-to-HIGH, HIGH-to-LOW, etc.)
12. These specifications guaranteed but not tested. The limits represent propagation delays with 250pF load capacitors in place of the 50pF load capacitors in the standard AC load.
13. Skew is defined as the absolute value of the difference between the actual propagation delays for any two separate outputs of the same device. The specification applies to any outputs switching HIGH-to-LOW (t_{OSHL}), LOW-to-HIGH (t_{OSLH}), or any combination switching LOW-to-HIGH and/or HIGH-to-LOW (t_{OST}). The specification is guaranteed but not tested.
14. This describes the difference between the delay of the LOW-to-HIGH and the HIGH-to-LOW transition on the same pin. It is measured across all the outputs (drivers) on the same chip, the worst (largest delta) number is the guaranteed specification. This specification is guaranteed but not tested.
15. Propagation delay variation for a given set of conditions (i.e., temperature and V_{CC}) from device to device. This specification is guaranteed but not tested.

Capacitance

Symbol	Parameter	Conditions T_A = 25°C	Typ.	Units
C_{IN}	Input Capacitance	V_{CC} = 0.0V	5.0	pF
C_{OUT}(16)	Output Capacitance	V_{CC} = 5.0V	9.0	pF

Note:

16. C_{OUT} is measured at frequency of f = 1 MHz, per MIL-STD-883, Method 3012.

AC Loading

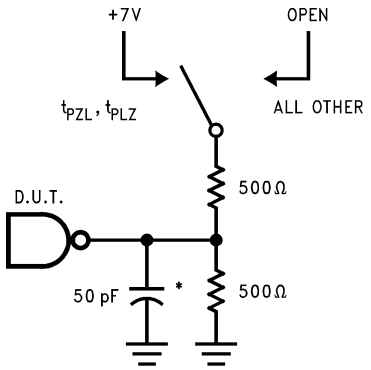

*Includes jig and probe capacitance

Figure 1. Standard AC Test Load

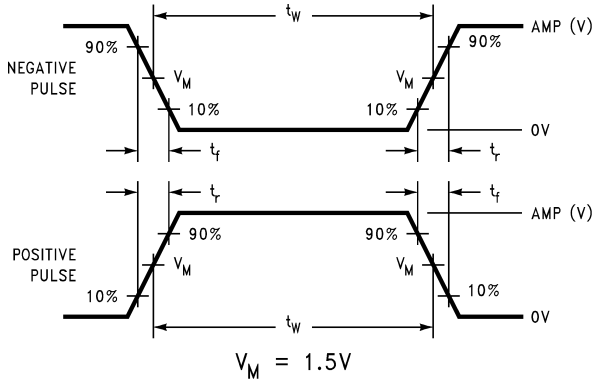

Figure 2. Test Input Signal Levels

Amplitude	Rep. Rate	t_W	t_r	t_f
3.0V	1 MHz	500 ns	2.5 ns	2.5 ns

Figure 3. Test Input Signal Requirements

AC Waveforms

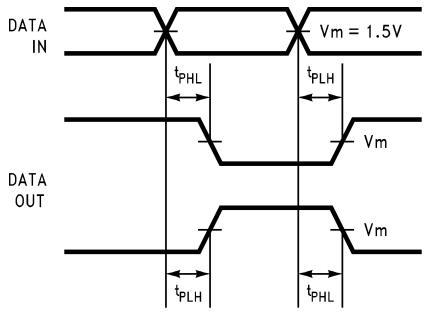

Figure 4. Propagation Delay Waveforms for Inverting and Non-Inverting Functions

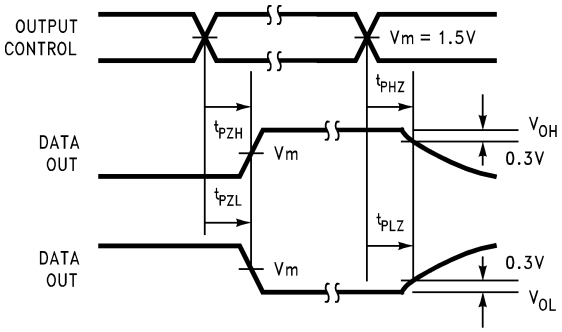

Figure 6. 3-STATE Output HIGH and LOW Enable and Disable Time

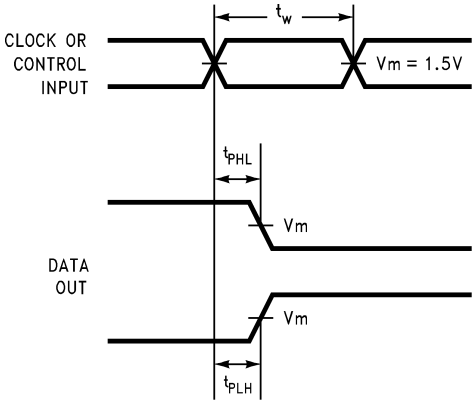

Figure 5. Propagation Delay, Pulse Width Waveforms

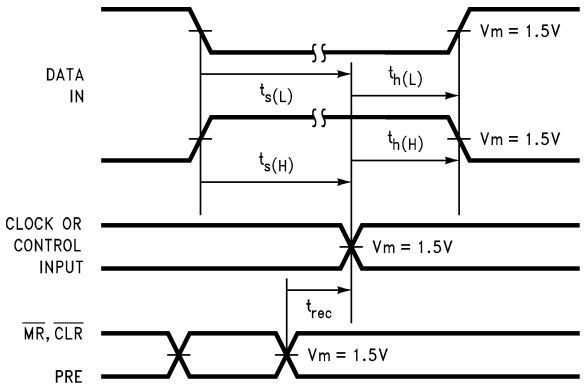

Figure 7. Setup Time, Hold Time and Recovery Time Waveforms

Physical Dimensions

Dimensions are in inches (millimeters) unless otherwise noted.

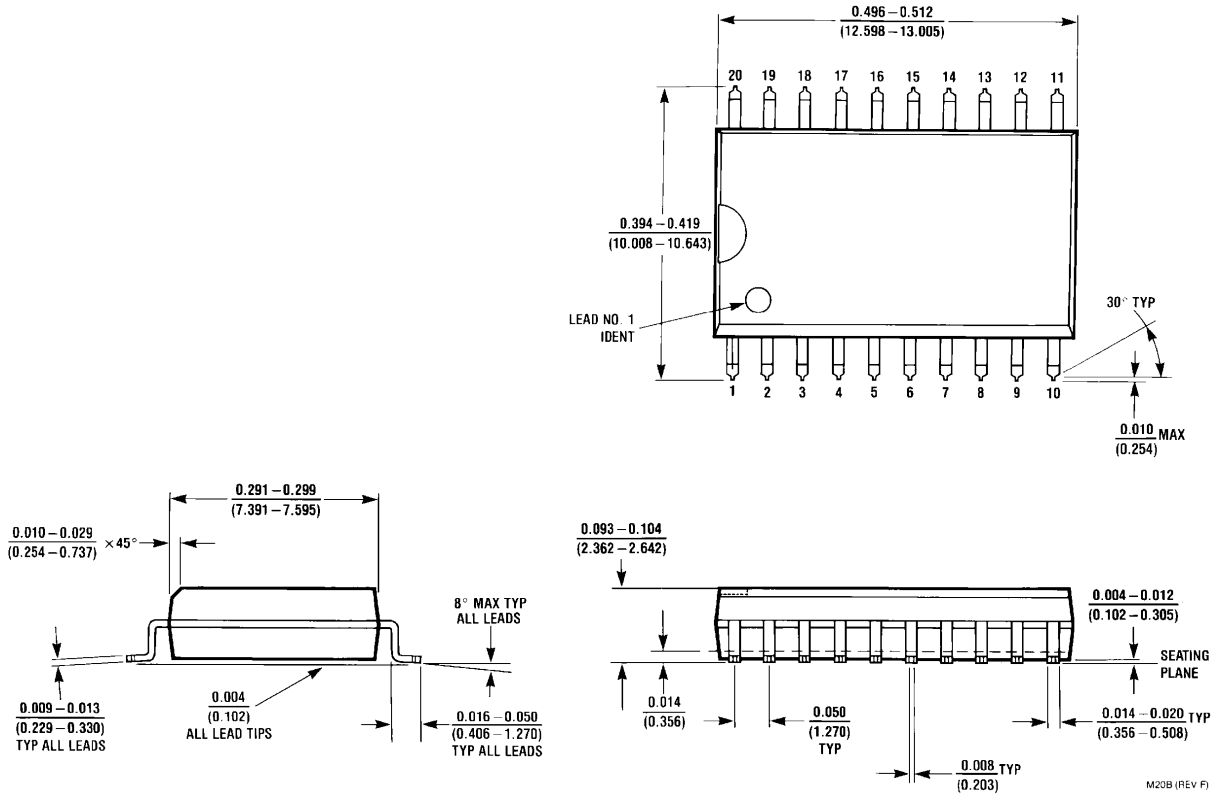

Figure 8. 20-Lead Small Outline Integrated Circuit (SOIC), JEDEC MS-013, 0.300" Wide
Package Number M20B

Physical Dimensions (Continued)

Dimensions are in millimeters unless otherwise noted.

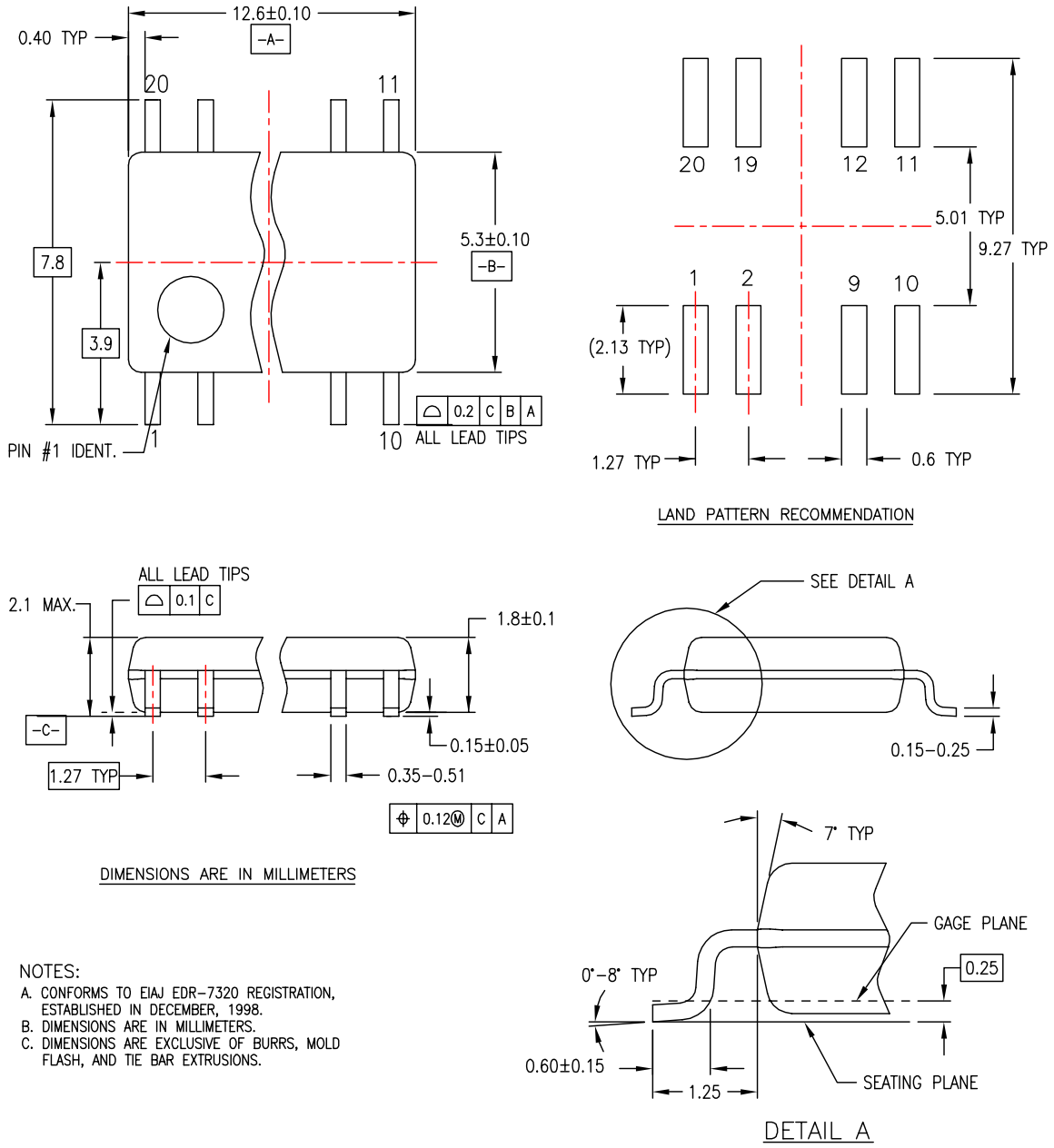

NOTES:

A. CONFORMS TO EIAJ EDR-7320 REGISTRATION, ESTABLISHED IN DECEMBER, 1998.
B. DIMENSIONS ARE IN MILLIMETERS.
C. DIMENSIONS ARE EXCLUSIVE OF BURRS, MOLD FLASH, AND TIE BAR EXTRUSIONS.

M20DREVC

Figure 9. 20-Lead Small Outline Package (SOP), EIAJ TYPE II, 5.3mm Wide Package Number M20D

Physical Dimensions (Continued)

Dimensions are in millimeters unless otherwise noted.

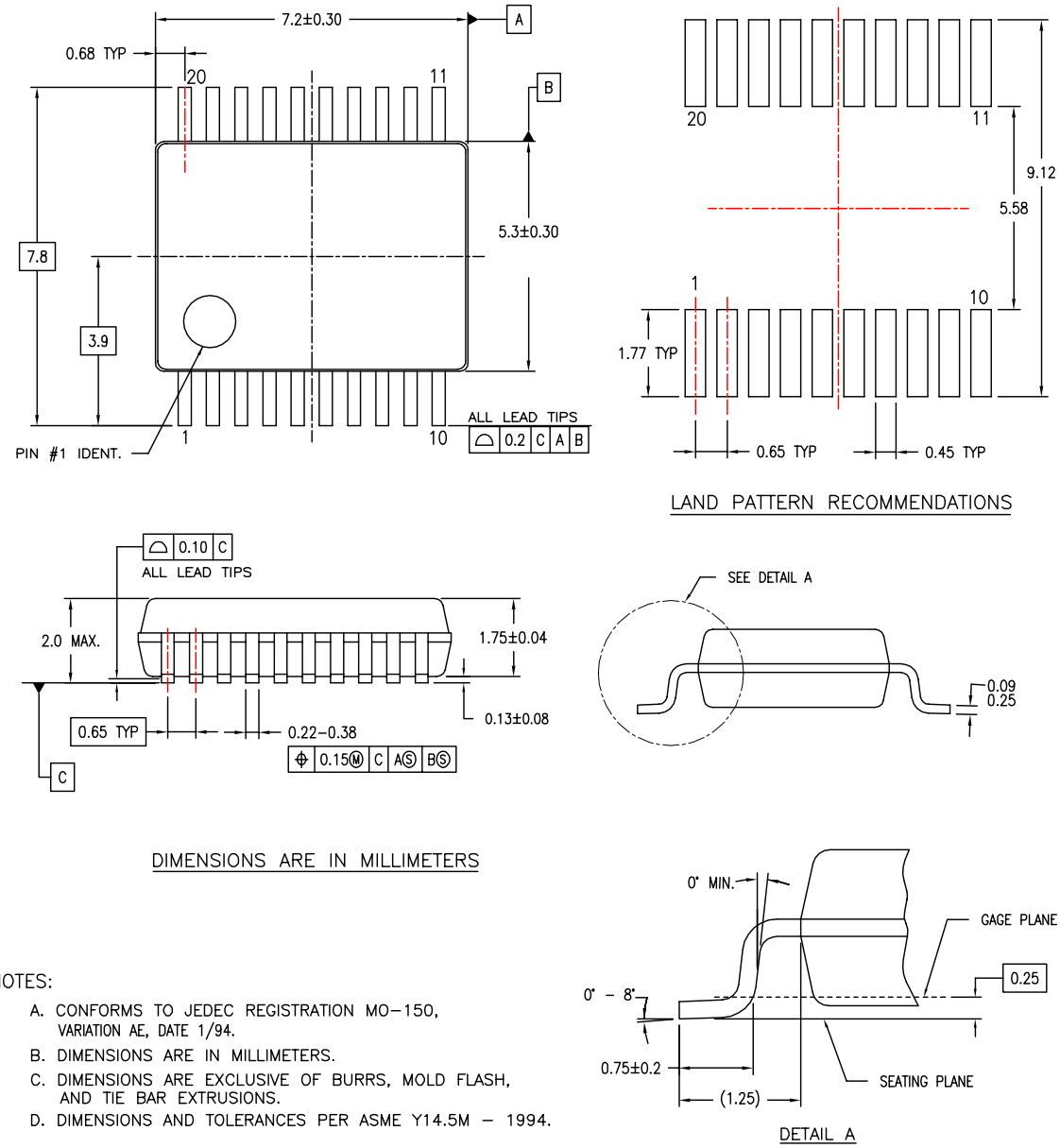

NOTES:

A. CONFORMS TO JEDEC REGISTRATION MO–150, VARIATION AE, DATE 1/94.

B. DIMENSIONS ARE IN MILLIMETERS.

C. DIMENSIONS ARE EXCLUSIVE OF BURRS, MOLD FLASH, AND TIE BAR EXTRUSIONS.

D. DIMENSIONS AND TOLERANCES PER ASME Y14.5M – 1994.

MSA20REVB

Figure 10. 20-Lead Shrink Small Outline Package (SSOP), JEDEC MO-150, 5.3mm Wide Package Number MSA20

Physical Dimensions (Continued)

Dimensions are in millimeters unless otherwise noted.

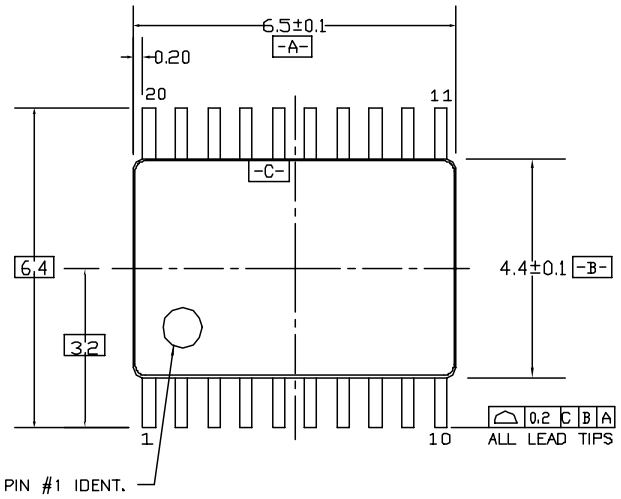

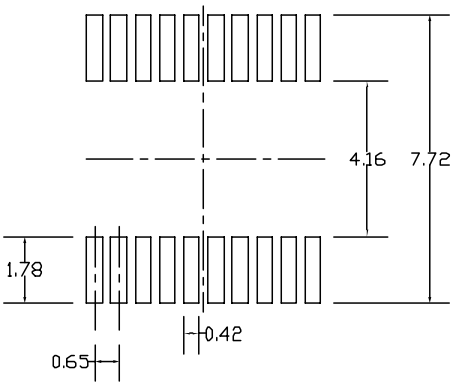

LAND PATTERN RECOMMENDATION

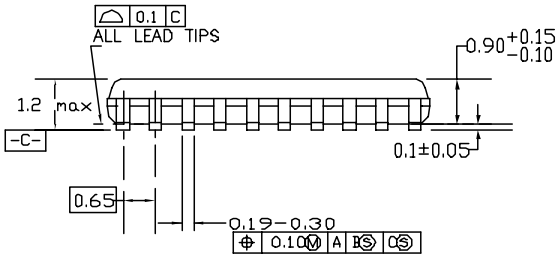

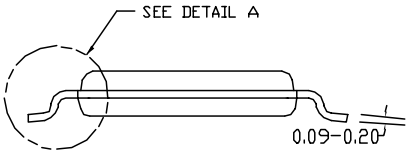

DIMENSIONS ARE IN MILLIMETERS

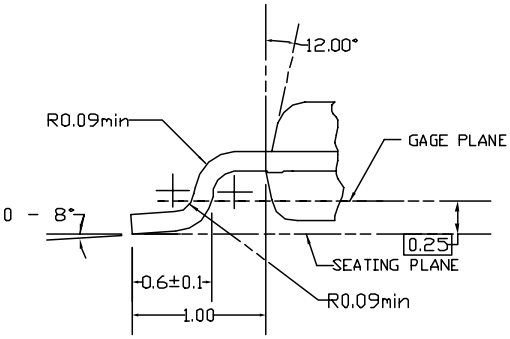

DETAIL A

NOTES:

A. CONFORMS TO JEDEC REGISTRATION MO-153, VARIATION AC, REF NOTE 6, DATE 7/93.

B. DIMENSIONS ARE IN MILLIMETERS.

C. DIMENSIONS ARE EXCLUSIVE OF BURRS, MOLDS FLASH, AND TIE BAR EXTRUSIONS.

D. DIMENSIONS AND TOLERANCES PER ANSI Y14.5M, 1982.

MTC20REVD1

Figure 11. 20-Lead Thin Shrink Small Outline Package (TSSOP), JEDEC MO-153, 4.4mm Wide Package Number MTC20

FAIRCHILD SEMICONDUCTOR®

TRADEMARKS

The following are registered and unregistered trademarks Fairchild Semiconductor owns or is authorized to use and is not intended to be an exhaustive list of all such trademarks.

ACEx®
Across the board. Around the world.™
ActiveArray™
Bottomless™
Build it Now™
CoolFET™
CROSSVOLT™
CTL™
Current Transfer Logic™
DOME™
E^2CMOS™
EcoSPARK®
EnSigna™
FACT Quiet Series™
FACT®
FAST®
FASTr™
FPS™
FRFET®
GlobalOptoisolator™
GTO™
HiSeC™
i-Lo™
ImpliedDisconnect™
IntelliMAX™
ISOPLANAR™
MICROCOUPLER™
MicroPak™
MICROWIRE™
MSX™
MSXPro™
OCX™
OCXPro™
OPTOLOGIC®
OPTOPLANAR®
PACMAN™
POP™
Power220®
Power247®
PowerEdge™
PowerSaver™
PowerTrench®
Programmable Active Droop™
QFET®
QS™
QT Optoelectronics™
Quiet Series™
RapidConfigure™
RapidConnect™
ScalarPump™
SMART START™
SPM®
STEALTH™
SuperFET™
SuperSOT™-3
SuperSOT™-6
SuperSOT™-8
SyncFET™
TCM™
The Power Franchise®
™
TinyBoost™
TinyBuck™
TinyLogic®
TINYOPTO™
TinyPower™
TinyWire™
TruTranslation™
µSerDes™
UHC®
UniFET™
VCX™
Wire™

DISCLAIMER

FAIRCHILD SEMICONDUCTOR RESERVES THE RIGHT TO MAKE CHANGES WITHOUT FURTHER NOTICE TO ANY PRODUCTS HEREIN TO IMPROVE RELIABILITY, FUNCTION OR DESIGN. FAIRCHILD DOES NOT ASSUME ANY LIABILITY ARISING OUT OF THE APPLICATION OR USE OF ANY PRODUCT OR CIRCUIT DESCRIBED HEREIN; NEITHER DOES IT CONVEY ANY LICENSE UNDER ITS PATENT RIGHTS, NOR THE RIGHTS OF OTHERS. THESE SPECIFICATIONS DO NOT EXPAND THE TERMS OF FAIRCHILD'S WORLDWIDE TERMS AND CONDITIONS, SPECIFICALLY THE WARRANTY THEREIN, WHICH COVERS THESE PRODUCTS.

LIFE SUPPORT POLICY

FAIRCHILD'S PRODUCTS ARE NOT AUTHORIZED FOR USE AS CRITICAL COMPONENTS IN LIFE SUPPORT DEVICES OR SYSTEMS WITHOUT THE EXPRESS WRITTEN APPROVAL OF FAIRCHILD SEMICONDUCTOR CORPORATION.

As used herein:

1. Life support devices or systems are devices or systems which, (a) are intended for surgical implant into the body or (b) support or sustain life, and (c) whose failure to perform when properly used in accordance with instructions for use provided in the labeling, can be reasonably expected to result in a significant injury of the user.
2. A critical component in any component of a life support, device, or system whose failure to perform can be reasonably expected to cause the failure of the life support device or system, or to affect its safety or effectiveness.

PRODUCT STATUS DEFINITIONS

Definition of Terms

Datasheet Identification	Product Status	Definition
Advance Information	Formative or In Design	This datasheet contains the design specifications for product development. Specifications may change in any manner without notice.
Preliminary	First Production	This datasheet contains preliminary data; supplementary data will be published at a later date. Fairchild Semiconductor reserves the right to make changes at any time without notice to improve design.
No Identification Needed	Full Production	This datasheet contains final specifications. Fairchild Semiconductor reserves the right to make changes at any time without notice to improve design.
Obsolete	Not In Production	This datasheet contains specifications on a product that has been discontinued by Fairchild Semiconductor. The datasheet is printed for reference information only.

Rev. I24

Общество с ограниченной ответственностью «МосЧип» ИНН 7719860671 / КПП 771901001
Адрес: 105318, г.Москва, ул.Щербаковская д.3, офис 1107

Данный компонент на территории Российской Федерации

Вы можете приобрести в компании MosChip.

Для оперативного оформления запроса Вам необходимо перейти по данной ссылке:

http://moschip.ru/get-element

Вы можете разместить у нас заказ для любого Вашего проекта, будь то серийное производство или разработка единичного прибора.

В нашем ассортименте представлены ведущие мировые производители активных и пассивных электронных компонентов.

Нашей специализацией является поставка электронной компонентной базы двойного назначения, продукции таких производителей как XILINX, Intel (ex.ALTERA), Vicor, Microchip, Texas Instruments, Analog Devices, Mini-Circuits, Amphenol, Glenair.

Сотрудничество с глобальными дистрибьюторами электронных компонентов, предоставляет возможность заказывать и получать с международных складов практически любой перечень компонентов в оптимальные для Вас сроки.

На всех этапах разработки и производства наши партнеры могут получить квалифицированную поддержку опытных инженеров.

Система менеджмента качества компании отвечает требованиям в соответствии с ГОСТ Р ИСО 9001, ГОСТ РВ 0015-002 и ЭС РД 009

Офис по работе с юридическими лицами:

105318, г.Москва, ул.Щербаковская д.3, офис 1107, 1118, ДЦ «Щербаковский»

Телефон: +7 495 668-12-70 (многоканальный)

Факс: +7 495 668-12-70 (доб.304)

E-mail: info@moschip.ru

Skype отдела продаж:
moschip.ru
moschip.ru_4
moschip.ru_6
moschip.ru_9