Ceramic Disc Capacitors Class 1 and 2, 1 kV_{DC}, 2 kV_{DC}, 3 kV_{DC} and 6 kV_{DC}, General Purpose

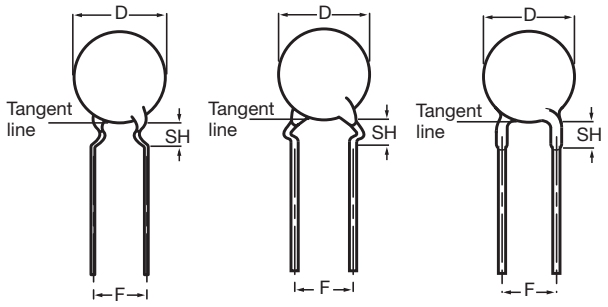

Capacitors with 5 mm (0.20"), 7.5 mm (0.30") and 10 mm (0.40") lead spacing

QUICK REFERENCE DATA		
DESCRIPTION	CLASS 1 (SL0, S3N)	CLASS 2 (Y5P, X7R, Z5U, Y5V, X5F)
Voltage (V_{DC})	1000, 2000, 3000, 6000	
Min. Capacitance (pF)	10	100
Max. Capacitance (pF)	220	33 000
Mounting	Through hole	

MARKING

Straight and kinked leaded versions are gold coloured Marking indicates capacitance value and tolerance in accordance with “EIA 198” and voltage:

OPERATING TEMPERATURE RANGE

Class 1 SL0, S3N, - 55 °C to + 125 °C

Class 2, X7R - 55 °C to + 125 °C

Class 2, Y5P, Z5U, Y5V, - 30 °C to + 85 °C

Class 2, X5F - 55 °C to + 85 °C

TEMPERATURE COEFFICIENTS

Class 1 SL0, S3N

Class 2 X7R, Y5P, Z5U, Y5V, X5F

SECTIONAL SPECIFICATIONS

Class 1, IEC 60 384-8,

Class 2, IEC 60 384-9,

EIA 198

CLIMATIC CATEGORY

Class 1, SL0, 55/125/21

Class 2, X7R, 55/125/21

Class 2, Y5P, Z5U, Y5V, 30/85/21

Class 2, X5F, 55/85/21

FEATURES

- Low losses
- High stability
- High capacitance in small size
- Kinked (preferred) or straight leads
- Compliant to RoHS directive 2002/95/EC

Pb e3 RoHS COMPLIANT

APPLICATIONS

- DC high voltage
- Pulse high voltage
- SMPS
- HV power supply
- HF ballast

DESIGN

The capacitors consist of a ceramic disc both sides of which are silver-plated. Connection leads are made of tinned copper having a diameter of 0.6 mm or 0.8 mm up to 3 kV and 0.8 mm for 6 kV.

The capacitors may be supplied with kinked or straight leads with a lead spacing of 5 mm (0.20"), 7.5 mm (0.30") or 10 mm (0.40") and a lead length from 4 mm to 30 mm. The standard tolerance on capacitance is 5 % or 10 % for class 1 capacitors and ± 10 % or ± 20 % for class 2 capacitors. Encapsulation is made of gold-colored epoxy-resin, flammable resistant in accordance with “UL 94 V-0”

CAPACITANCE RANGE

Class 1, at 1 MHz, 1.2 V_{RMS} ; 10 pF to 220 pF

1 kHz, 1 V_{RMS} ± 0.2 V_{RMS} for capacitance values higher than 1000 pF

Class 2, at 1 kHz, 1 V_{RMS} ± 0.2 V_{RMS} ; 100 pF to 33 000 pF

RATED DC VOLTAGE

1 kV; 2 kV; 3 kV; 6 kV

DIELECTRIC STRENGTH

200 % of rated voltage

INSULATION RESISTANCE AT 500 V_{DC}

≥ 10 000 MΩ

TOLERANCE ON CAPACITANCE

± 5 %; ± 10 %; ± 20 %; + 80/- 20 %

Other tolerances available on request

DISSIPATION FACTOR

Class 1, C ≤ 30 pF; ≤ 20 x (10/C + 0.7) x 10^{-4} max.

Class 1, C > 30 pF; ≤ 0.2 %

Class 2, ≤ 3.0 %

ORDERING INFORMATION 1 kV_{DC}, STRAIGHT					
C (pF)	TOL. (%)	$D_{MAX.}$ (mm)	LEAD SPACING (mm)	SH [1] (mm)	CLEAR TEXT CODE 13TH DIGIT: T = REEL; U = AMMO; 3 = BULK 16TH DIGIT: R = RoHS COMPLIANT
CLASS 1 SL0					
10	± 5	6.5	5.0	4.0	S100J25SL0N6.J5.
	± 10				S100K25SL0N6.J5.
12	± 5				S120J25SL0N6.J5.
	± 10				S120K25SL0N6.J5.
15	± 5				S150J25SL0N6.J5.
	± 10				S150K25SL0N6.J5.
18	± 5				S180J25SL0N6.J5.
	± 10				S180K25SL0N6.J5.
22	± 5				S220J25SL0N6.J5.
	± 10				S220K25SL0N6.J5.
27	± 5				S270J25SL0N6.J5.
	± 10				S270K25SL0N6.J5.
33	± 5				S330J25SL0N6.J5.
	± 10				S330K25SL0N6.J5.
39	± 5				S390J25SL0N6.J5.
	± 10				S390K25SL0N6.J5.
47	± 5				S470J25SL0N6.J5.
	± 10				S470K25SL0N6.J5.
56	± 5	7.5			S560J29SL0N6.J5.
	± 10				S560K29SL0N6.J5.
68	± 5				S680J29SL0N6.J5.
	± 10				S680K29SL0N6.J5.
82	± 5				S820J29SL0N6.J5.
	± 10				S820K29SL0N6.J5.
100	± 5				S101J29SL0N6.J5.
	± 10				S101K29SL0N6.J5.
120	± 5	8.5			S121J33SL0N6.J5.
	± 10				S121K33SL0N6.J5.
150		10			S151K33SL0N6.J5.
220					S221K39SL0N6.J5.
CLASS 2 X7R					
100	± 10	6.5	5.0	4.0	S101K25X7RN6.J5.
150					S151K25X7RN6.J5.
220					S221K25X7RN6.J5.
330					S331K25X7RN6.J5.
470		7.5			S471K29X7RN6.J5.
680					S681K29X7RN6.J5.
1000		8.5			S102K33X7RN6.J5.
1500		10			S152K39X7RN6.J5.
2200		11			S222K43X7RN6.J5.
3 300		12	7.5		S332K47X7RN6.J7.
4 700		15		4.8	S472K59X7RN6.J7.
CLASS 2 Y5P					
100	± 10	6.5	5.0	4.0	S101K25Y5PN6.J5.
150					S151K25Y5PN6.J5.
220					S221K25Y5PN6.J5.
330					S331K25Y5PN6.J5.
470					S471K25Y5PN6.J5.
680		7.5			S681K29Y5PN6.J5.
1000					S102K29Y5PN6.J5.
1500		8.5			S152K33Y5PN6.J5.

ORDERING INFORMATION 1 kV_{DC}, STRAIGHT

C (pF)	TOL. (%)	$D_{MAX.}$ (mm)	LEAD SPACING (mm)	SH [1] (mm)	CLEAR TEXT CODE 13TH DIGIT: T = REEL; U = AMMO; 3 = BULK 16TH DIGIT: R = RoHS COMPLIANT
CLASS 2 Y5P					
2200	± 10	10	5.0	4.0	S222K39Y5PN6.J5.
3300		11			S332K43Y5PN6.J5.
4700		13.5	7.5	4.8	S472K53Y5PN63J7.
6800		15			S682K59Y5PN63J7.
10 000		19	10		S103K75Y5PN83J0.
CLASS 2 Z5U					
1000	± 20	6.5	5.0	4.0	S102M25Z5UN6.J5.
1500					S152M29Z5UN6.J5.
2200					S222M29Z5UN6.J5.
3300		8.5			S332M33Z5UN6.J5.
4700		10			S472M39Z5UN6.J5.
6800		11			S682M43Z5UN6.J5.
10 000		12	7.5	4.8	S103M47Z5UN63J7.
15 000		15			S153M59Z5UN63J7.
22 000		19	10		S223M75Z5UN83J0.
CLASS 2 Y5V					
1000	+ 80/- 20	6.5	5.0	4.0	S102Z25Y5VN6.J5.
1500					S152Z25Y5VN6.J5.
2200		7.5			S222Z29Y5VN6.J5.
3300					S332Z29Y5VN6.J5.
4700		8.5			S472Z33Y5VN6.J5.
6800		10			S682Z39Y5VN6.J5.
10 000		11			S103Z43Y5VN6.J5.
15 000		13.5	7.5	4.8	S153Z53Y5VN6.J7.
22 000		15			S223Z59Y5VN6.J7.
33 000		19	10		S333Z75Y5VN8.J0.

ORDERING INFORMATION 1 kV_{DC}, KINKED

C (pF)	TOL. (%)	$D_{MAX.}$ (mm)	LEAD SPACING (mm)	SH [2] (mm)	CLEAR TEXT CODE 13TH DIGIT: T = REEL; U = AMMO; 3 = BULK 16TH DIGIT: R = RoHS COMPLIANT
CLASS 2 X5F					
100	± 10	6.5	5.0	4.0	S101K25X5FN6.J5R
220					S221K25X5FN6.J5R
270					S271K25X5FN6.J5R
330					S331K25X5FN6.J5R
390					S391K25X5FN6.J5R
470					S471K25X5FN6.J5R
680		7.5			S681K29X5FN6.J5R
820					S821K29X5FN6.J5R
1000					S102K29X5FN6.J5R
2200		11			S222K43X5FN6.J5R
3300		13.5	7.5	4.8	S332K53X5FN6.J7R
4700		16			S472K63X5FN63J7R

Notes

[1] SH = seated height

- Maximum thickness 4.0 mm
- Lead style codes refer to inward kinked leads. Other styles available on request

ORDERING INFORMATION 2 kV_{DC}, KINKED					
C (pF)	TOL. (%)	$D_{MAX.}$ (mm)	LEAD SPACING (mm)	SH [1] (mm)	CLEAR TEXT CODE 13TH DIGIT: T = REEL; U = AMMO; 3 = BULK 16TH DIGIT: R = RoHS COMPLIANT
CLASS 1 SL0					
10	± 5	6.5	5.0	4.0	S100J25SL0P6.K5.
	± 10				S100K25SL0P6.K5.
12	± 5				S120J25SL0P6.K5.
	± 10				S120K25SL0P6.K5.
15	± 5				S150J25SL0P6.K5.
	± 10				S150K25SL0P6.K5.
18	± 5				S180J25SL0P6.K5.
	± 10				S180K25SL0P6.K5.
22	± 5				S220J25SL0P6.K5.
	± 10				S220K25SL0P6.K5.
27	± 5				S270J25SL0P6.K5.
	± 10				S270K25SL0P6.K5.
33	± 5	7.5			S330J29SL0P6.K5.
	± 10				S330K29SL0P6.K5.
39	± 5				S390J29SL0P6.K5.
	± 10				S390K29SL0P6.K5.
47	± 5				S470J29SL0P6.K5.
	± 10				S470K29SL0P6.K5.
56	± 5				S560J29SL0P6.K5.
	± 10				S560K29SL0P6.K5.
68	± 5	8.5			S680J33SL0P6.K5.
	± 10				S680K33SL0P6.K5.
82	± 5				S820J33SL0P6.K5.
	± 10				S820K33SL0P6.K5.
100	± 5	10			S101J39SL0P6.K5.
	± 10				S101K39SL0P6.K5.
120	± 5				S121J39SL0P6.K5.
	± 10				S121K39SL0P6.K5.
150	± 10	11			S151K43SL0P6.K5.
CLASS 2 X7R					
100	± 10	6.5	5.0	4.0	S101K25X7RP6.K5.
150					S151K25X7RP6.K5.
220					S221K25X7RP6.K5.
330					S331K25X7RP6.K5.
470		7.5			S471K29X7RP6.K5.
680		8.5			S681K33X7RP6.K5.
1000		10			S102K39X7RP6.K5.
1500		11			S152K43X7RP6.K5.
2200		13.5	7.5	4.8	S222K53X7RP6.K7.
3300		15			S332K59X7RP6.K7.
CLASS 2 Y5P					
100	± 10	6.5	5.0	4.0	S101K25Y5PP6.K5.
150					S151K25Y5PP6.K5.
220					S221K25Y5PP6.K5.
330					S331K25Y5PP6.K5.
470		7.5			S471K29Y5PP6.K5.
680					S681K29Y5PP6.K5.
1000		8.5			S102K33Y5PP6.K5.
1500		10			S152K39Y5PP6.K5.
2200		11			S222K43Y5PP6.K5.
3300		13.5	7.5	4.8	S332K53Y5PP63K7.
4700		17.5			S472K69Y5PP63K7.

ORDERING INFORMATION 2 kV_{DC}, KINKED

C (pF)	TOL. (%)	$D_{MAX.}$ (mm)	LEAD SPACING (mm)	SH [1] (mm)	CLEAR TEXT CODE 13TH DIGIT: T = REEL; U = AMMO; 3 = BULK 16TH DIGIT: R = RoHS COMPLIANT
CLASS 2 Z5U					
1000	± 20	7.5	5.0	4.0	S102M29Z5UP6.K5.
1500					S152M29Z5UP6.K5.
2200		8.5			S222M33Z5UP6.K5.
3300		11			S332M43Z5UP6.K5.
4700		12	7.5	4.8	S472M47Z5UP63K7.
6800		13.5			S682M53Z5UP63K7.
10 000		17.5			S103M69Z5UP63K7.
CLASS 2 Y5V					
1000	+ 80/- 20	7.5	5.0	4.0	S102Z29Y5VP6.K5.
1500					S152Z29Y5VP6.K5.
2200		8.5			S222Z33Y5VP6.K5.
3300		10.5			S322Z39Y5VP6.K5.
4700		11			S472Z43Y5VP6.K5.
6800		12	7.5	4.8	S682Z47Y5VP6.K7.
10 000		15			S103Z59Y5VP6.K7.
CLASS 2 X5F					
1 00	± 10	6.5	5.0	4.0	S101K25X5FP6.K5R
220					S221K25X5FP6.K5R
330		7.5			S331K29X5FP6.K5R
470		8			S471K31X5FP6.K5R
680		10			S681K39X5FP6.K5R
1000		11			S102K43X5FP6.K5R
2200		15	7.5	4.8	S222K59X5FP6.K7R
3300		16.5			S332K65X5FP63K7R

Notes

[1] SH = seated height

- Maximum thickness 4.0 mm
- Lead style codes refer to inward kinked leads. Other styles available on request

ORDERING INFORMATION CLASS 3 kV_{DC}, KINKED

C (pF)	TOL. (%)	$D_{MAX.}$ (mm)	LEAD SPACING (mm)	SH [1] (mm)	CLEAR TEXT CODE 13TH DIGIT: T = REEL; U = AMMO; 3 = BULK 16TH DIGIT: R = RoHS COMPLIANT
CLASS 1 SL					
10	± 10	8.5	7.5	4.0	S100K33SL0R63K7.
15					S150K33SL0R63K7.
22					S220K33SL0R63K7.
33					S330K33SL0R63K7.
47					S470K33SL0R63K7.
68		10			S680K39SL0R63K7.
CLASS 2 X7R					
100	± 10	8.5	7.5	4.0	S101K33X7RR63K7.
150					S151K33X7RR63K7.
220					S221K33X7RR63K7.
330					S331K33X7RR63K7.
470					S471K33X7RR63K7.
680		10			S681K39X7RR63K7.
1000		11			S102K43X7RR63K7.
1500		13.5		4.8	S152K53X7RR63K7.
2200		17.5			S222K59X7RR83K7.

ORDERING INFORMATION CLASS 3 kV_{DC}, KINKED					
C (pF)	TOL. (%)	$D_{MAX.}$ (mm)	LEAD SPACING (mm)	SH [1] (mm)	CLEAR TEXT CODE 13TH DIGIT: T = REEL; U = AMMO; 3 = BULK 16TH DIGIT: R = RoHS COMPLIANT
CLASS 2 Y5P					
100	± 10	8.5	7.5	4.0	S101K33Y5PR63K7.
150					S151K33Y5PR63K7.
220					S221K33Y5PR63K7.
330					S331K33Y5PR63K7.
470					S471K33Y5PR63K7.
680		10			S681K39Y5PR63K7.
1000		11			S102K43Y5PR63K7.
1500		12		4.8	S152K47Y5PR63K7.
2200		15			S222K59Y5PR63K7.
3 300		19	10		S332K75Y5PR83K0.
CLASS 2 Z5U					
470	± 20	8.5	7.5	4.0	S471M33Z5UR63K7.
680					S681M33Z5UR63K7.
1000					S102M33Z5UR63K7.
1500		10			S152M39Z5UR63K7.
2200		11			S222M43Z5UR63K7.
3300		13.5		4.8	S332M53Z5UR63K7.
4700		17.5			S472M69Z5UR83K7.
CLASS 2 Y5V					
1000	+ 80/- 20	8.5	7.5	4.0	S102Z33Y5VR63K7.
1500					S152Z33Y5VR63K7.
2200		10			S222Z39Y5VR63K7.
3300		11			S322Z43Y5VR63K7.
4700		12		4.8	S472Z47Y5VR63K7.
6800		15			S682Z59Y5VR63K7.

Notes

[1] SH = seated height

- Maximum thickness 4.0 mm
- Lead style codes refer to inward kinked leads. Other styles available on request

ORDERING INFORMATION CLASS 6 kV_{DC}, KINKED					
C (pF)	TOL. (%)	$D_{MAX.}$ (mm)	LEAD SPACING (mm)	SH [1] (mm)	CLEAR TEXT CODE 13TH DIGIT: T = REEL; U = AMMO; 3 = BULK 16TH DIGIT: R = RoHS COMPLIANT
CLASS 1 SL					
10	± 20	10	10	3.0	S100M39SL0U83L0.
15					S150M43SL0U83L0.
22					S220M43SL0U83L0.
33		13.5			S330M53SL0U83L0.
CLASS 1 S3N					
47	± 20	11	10	3.0	S470M43S3NU83L0.
68		13.5			S680M53S3NU83L0.
100		15			S101M59S3NU83L0.
150		15			S151M59S3NU83L0.
CLASS 2 Z5U					
220	± 20	10	10	3.0	S221M39Z5UU83L0.
330		11			S331M43Z5UU83L0.
470		12			S471M47Z5UU83L0.

ORDERING INFORMATION CLASS 6 kV_{DC}, KINKED

C (pF)	TOL. (%)	$D_{MAX.}$ (mm)	LEAD SPACING (mm)	SH [1] (mm)	CLEAR TEXT CODE 13TH DIGIT: T = REEL; U = AMMO; 3 = BULK 16TH DIGIT: R = RoHS COMPLIANT
CLASS 2 Z5U					
680	± 20	13.5	10	3.0	S681M53Z5UU83L0.
1000		15			S102M59Z5UU83L0.
1500		17.5			S152M69Z5UU83L0.
2200		19			S222M75Z5UU83L0.

Notes

(1) SH = seated height

- Maximum thickness 4.0 mm
- Lead style codes refer to inward kinked leads. Other styles available on request

PACKAGING

PACKAGING TYPE	SIZE CODE	LEAD SPACE (mm)	VOLTAGE (V_{DC})	SPQ	BOX DIMENSIONS L x W x H (mm)
Bulk (long lead L ≥ 25.4 mm	20 to 47	all	all	1000	245 x 120 x 65
				1000	
				1000	
	53 to 75			500	
	84 to 96			250	
Tape and reel	≤ 47	≤ 6.40	< 500	2500	370 x 370 x 60
			500 ≤ WV ≤ 2000	2000	
			3000	1000	
		≥ 7.5	all	1000	
Ammopack	≤ 47	≤ 6.40	< 500	2000	335 x 240 x 50
			500 ≤ WV < 2000	1500	335 x 290 x 50
			2000 and 3000	1500	
		≥ 7.5	all	1500	360 x 330 x 55

Note

- The capacitors are supplied in bulk packaging (cardboard boxes), in tape on reel or in ammopack

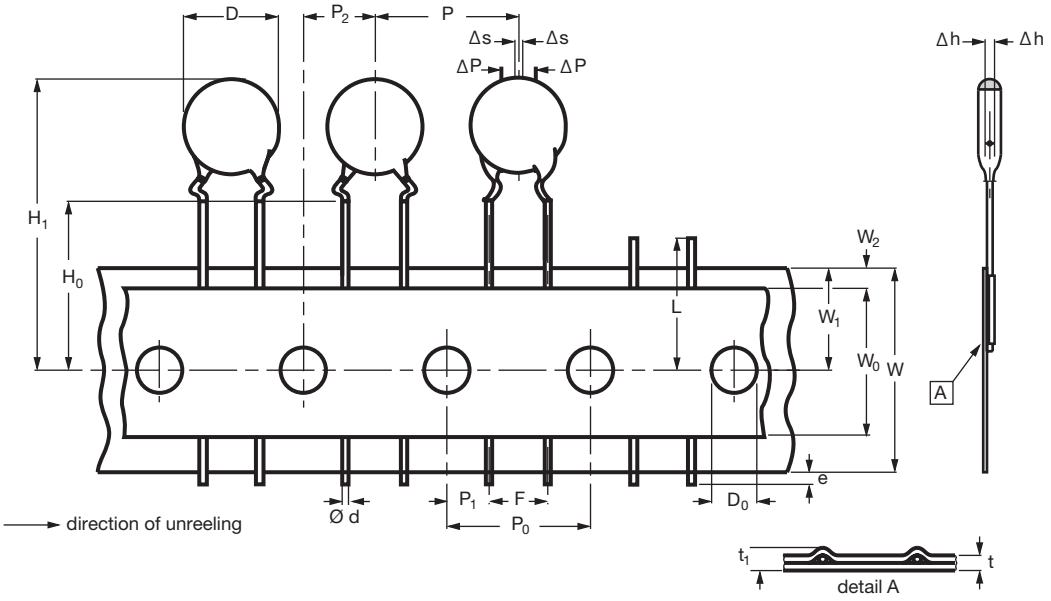

DIMENSIONS OF TAPE			
SYMBOL	PARAMETER	DIMENSIONS (mm)	
		NOMINAL	TOLERANCE
D	Body diameter	11.0 maximum	-
d	Lead diameter	0.6	± 0.05
P	Pitch between capacitors	12.7	± 1.0
P_0 (1)	Feed-hole pitch	12.7	± 0.3
ΔP	Plane deviation	1.0 maximum	-
P_1 (2)	Feed-hole center to lead center	3.85	± 0.7
P_2 (2)	Feed-hole center to component center	6.35	± 1.3
F	Lead spacing	5.0	0.6 - 0.4
Δh	Component alignment	0	± 1.0
W	Tape width	18.0	1.0 - 0.5
W_0	Hold-down tape width	5.0 minimum	-
W_1	Hole position	9.0	0.75 - 0.5
W_2	Hold-down tape margin	3.0 maximum	-
H_0	Height to seating plane	16.0	± 0.5
H_1	Maximum component height	32.0	-
e	Lead end protrusion	1.0 maximum	-
L	Maximum length of snipped lead	11.0	-
D_0	Feed-hole diameter	4.0	± 0.2
t	Total tape thickness	0.9 maximum	-
t_1	Maximum thickness of tape and wires	1.5 maximum	-

Notes
(1) Cumulative pitch error: ± ≤ 1 mm/20 pitches
(2) Obliquity maximum 3°

REEL AND TAPE DATA in millimeters

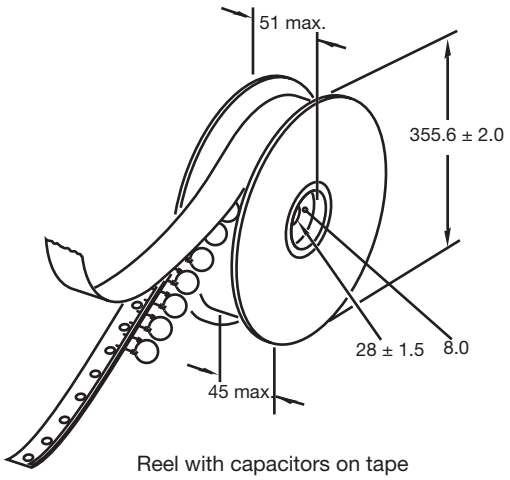

Reel with capacitors on tape

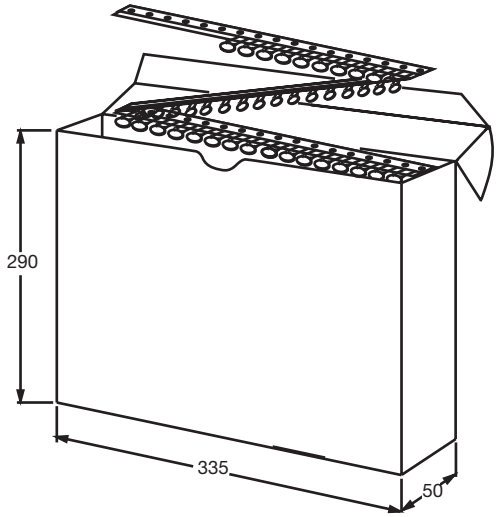

Ammopack with capacitors on tape

Disclaimer

ALL PRODUCT, PRODUCT SPECIFICATIONS AND DATA ARE SUBJECT TO CHANGE WITHOUT NOTICE TO IMPROVE RELIABILITY, FUNCTION OR DESIGN OR OTHERWISE.

Vishay Intertechnology, Inc., its affiliates, agents, and employees, and all persons acting on its or their behalf (collectively, "Vishay"), disclaim any and all liability for any errors, inaccuracies or incompleteness contained in any datasheet or in any other disclosure relating to any product.

Vishay makes no warranty, representation or guarantee regarding the suitability of the products for any particular purpose or the continuing production of any product. To the maximum extent permitted by applicable law, Vishay disclaims (i) any and all liability arising out of the application or use of any product, (ii) any and all liability, including without limitation special, consequential or incidental damages, and (iii) any and all implied warranties, including warranties of fitness for particular purpose, non-infringement and merchantability.

Statements regarding the suitability of products for certain types of applications are based on Vishay's knowledge of typical requirements that are often placed on Vishay products in generic applications. Such statements are not binding statements about the suitability of products for a particular application. It is the customer's responsibility to validate that a particular product with the properties described in the product specification is suitable for use in a particular application. Parameters provided in datasheets and/or specifications may vary in different applications and performance may vary over time. All operating parameters, including typical parameters, must be validated for each customer application by the customer's technical experts. Product specifications do not expand or otherwise modify Vishay's terms and conditions of purchase, including but not limited to the warranty expressed therein.

Except as expressly indicated in writing, Vishay products are not designed for use in medical, life-saving, or life-sustaining applications or for any other application in which the failure of the Vishay product could result in personal injury or death. Customers using or selling Vishay products not expressly indicated for use in such applications do so at their own risk. Please contact authorized Vishay personnel to obtain written terms and conditions regarding products designed for such applications.

No license, express or implied, by estoppel or otherwise, to any intellectual property rights is granted by this document or by any conduct of Vishay. Product names and markings noted herein may be trademarks of their respective owners.

Material Category Policy

Vishay Intertechnology, Inc. hereby certifies that all its products that are identified as RoHS-Compliant fulfill the definitions and restrictions defined under Directive 2011/65/EU of The European Parliament and of the Council of June 8, 2011 on the restriction of the use of certain hazardous substances in electrical and electronic equipment (EEE) - recast, unless otherwise specified as non-compliant.

Please note that some Vishay documentation may still make reference to RoHS Directive 2002/95/EC. We confirm that all the products identified as being compliant to Directive 2002/95/EC conform to Directive 2011/65/EU.

Vishay Intertechnology, Inc. hereby certifies that all its products that are identified as Halogen-Free follow Halogen-Free requirements as per JEDEC JS709A standards. Please note that some Vishay documentation may still make reference to the IEC 61249-2-21 definition. We confirm that all the products identified as being compliant to IEC 61249-2-21 conform to JEDEC JS709A standards.

Общество с ограниченной ответственностью «МосЧип» ИНН 7719860671 / КПП 771901001
Адрес: 105318, г.Москва, ул.Щербаковская д.3, офис 1107

Данный компонент на территории Российской Федерации

Вы можете приобрести в компании MosChip.

Для оперативного оформления запроса Вам необходимо перейти по данной ссылке:

http://moschip.ru/get-element

Вы можете разместить у нас заказ для любого Вашего проекта, будь то серийное производство или разработка единичного прибора.

В нашем ассортименте представлены ведущие мировые производители активных и пассивных электронных компонентов.

Нашей специализацией является поставка электронной компонентной базы двойного назначения, продукции таких производителей как XILINX, Intel (ex.ALTERA), Vicor, Microchip, Texas Instruments, Analog Devices, Mini-Circuits, Amphenol, Glenair.

Сотрудничество с глобальными дистрибьюторами электронных компонентов, предоставляет возможность заказывать и получать с международных складов практически любой перечень компонентов в оптимальные для Вас сроки.

На всех этапах разработки и производства наши партнеры могут получить квалифицированную поддержку опытных инженеров.

Система менеджмента качества компании отвечает требованиям в соответствии с ГОСТ Р ИСО 9001, ГОСТ РВ 0015-002 и ЭС РД 009

Офис по работе с юридическими лицами:

105318, г.Москва, ул.Щербаковская д.3, офис 1107, 1118, ДЦ «Щербаковский»

Телефон: +7 495 668-12-70 (многоканальный)

Факс: +7 495 668-12-70 (доб.304)

E-mail: info@moschip.ru

Skype отдела продаж:
moschip.ru
moschip.ru_4
moschip.ru_6
moschip.ru_9