Voltage Detector IC Series

# Standard CMOS Voltage Detector IC

## BD48xxx series BD49xxx series

### ●General Description

ROHM's BD48xxx and BD49xxx series are highly accurate, low-current Voltage Detector IC series. The family includes BD48xxx devices with N-channel open drain output and BD49xxx devices with CMOS output. The devices are available for specific detection voltages ranging from 2.3V to 6.0V in increments of 0.1V.

### ●Features

- High accuracy detection
- Ultra-low current consumption
- Two output types (Nch open drain and CMOS output)
- Wide Operating temperature range
- Very small and low height package
- Package SSOP5 is similar to SOT-23-5 (JEDEC)
- Package SSOP3 is similar to SOT-23-3 (JEDEC)

### ●Key Specifications

- Detection voltage: 2.3V to 6.0V (Typ.), 0.1V steps
- High accuracy detection voltage: ±1.0%
- Ultra-low current consumption: 0.9μA (Typ.)
- Operating temperature range: -40°C to +105°C

### ●Package

SSOP5: 2.90mm x 2.80mm x 1.25mm

SSOP3: 2.92mm x 2.80mm x 1.25mm

VSOF5: 1.60 mm x 1.60mm x 0.60mm

### ●Applications

Circuits using microcontrollers or logic circuits that require a reset.

### ●Typical Application Circuit

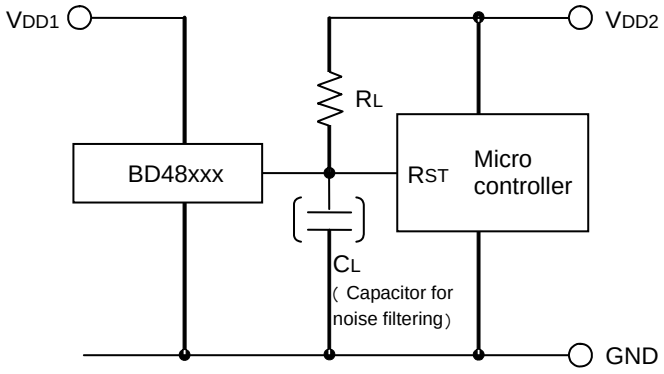


(Open Drain Output type)
BD48xxx series

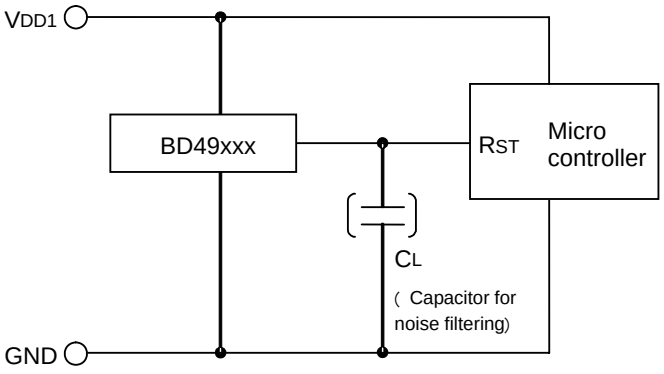


(CMOS Output type)
BD49xxx series

○Product structure : Silicon monolithic integrated circuit ○This product is not designed for protection against radioactive rays


© 2012 ROHM Co., Ltd. All rights reserved.

●**Connection Diagram**

**SSOP5**

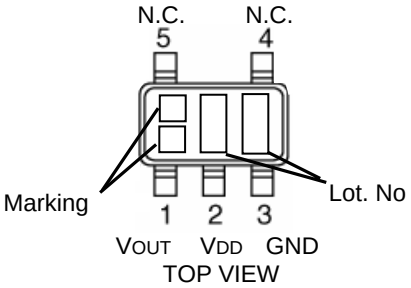


**VSOF5**

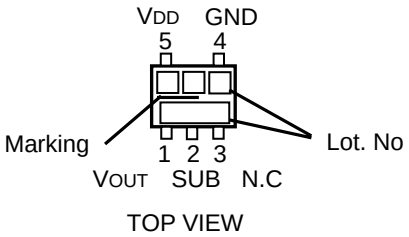


●**Pin Descriptions**

| SSOP5 | | |
|---|---|---|
| PIN No. | Symbol | Function |
| 1 | VOUT | Reset Output |
| 2 | VDD | Power Supply Voltage |
| 3 | GND | GND |
| 4 | N.C. | Unconnected Terminal |
| 5 | N.C. | Unconnected Terminal |

| VSOF5 | | |
|---|---|---|
| PIN No. | Symbol | Function |
| 1 | VOUT | Reset Output |
| 2 | SUB | Substrate* |
| 3 | N.C. | Unconnected Terminal |
| 4 | GND | GND |
| 5 | VDD | Power Supply Voltage |

*Connect the substrate to GND.

**SSOP3(1pin GND)**

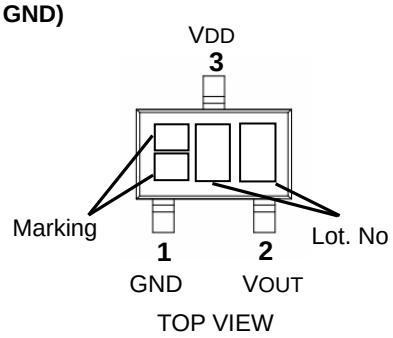


**SSOP3(3pin GND)**

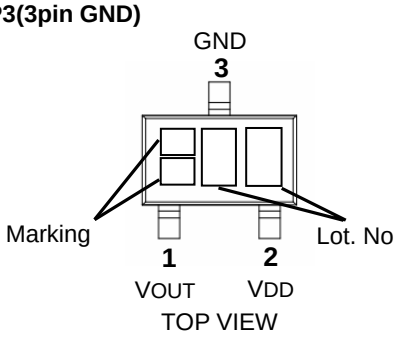


●**Pin Descriptions**

| SSOP3-1 | | |
|---|---|---|
| PIN No. | Symbol | Function |
| 1 | GND | GND |
| 2 | VOUT | Reset Output |
| 3 | VDD | Power Supply Voltage |

| SSOP3-2 | | |
|---|---|---|
| PIN No. | Symbol | Function |
| 1 | VOUT | Reset Output |
| 2 | VDD | Power Supply Voltage |
| 3 | GND | GND |

● **Ordering Information**

B D x x x x x x – T R

- Part Number
- Output Type
  48 : Open Drain
  49 : CMOS
- Package1
- Reset Voltage Value
  23 : 2.3V
  ⇩ 0.1V step
  60 : 6.0V
- Package2
- Packaging and forming specification
  Embossed tape and reel
  TR :The pin number 1is the upper right
  :SSOP5
  :VSOF5
  TL :The pin number 1is the upper left
  :SSOP3-1
  :SSOP3-2

| Package1 | Package2 | Package name |
|---|---|---|
| E | G | SSOP5 |
| K | G | SSOP3(1pin GND) |
| L | G | SSOP3(3pin GND) |
| Blank | FVE | VSOF5 |
| Blank | G | SSOP5 |

Note: When ordering new SSOP5, select “E” for Package 1 and “G” for Package 2.


© 2012 ROHM Co., Ltd. All rights reserved.

## SSOP5

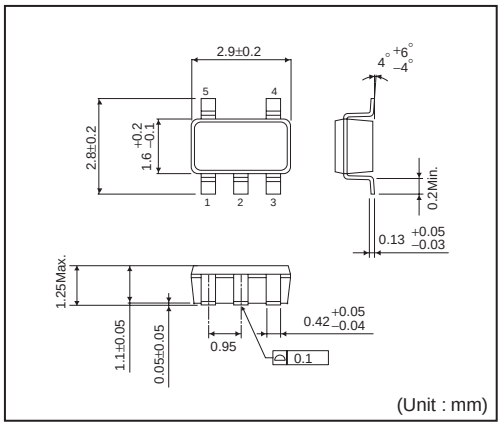


<Tape and Reel information>

| | |
|---|---|
| Tape | Embossed carrier tape |
| Quantity | 3000pcs |
| Direction of feed | TR<br>( The direction is the 1pin of product is at the upper right when you hold reel on the left hand and you pull out the tape on the right hand ) |

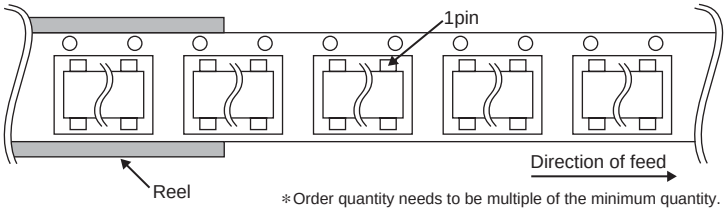


∗Order quantity needs to be multiple of the minimum quantity.

## VSOF5

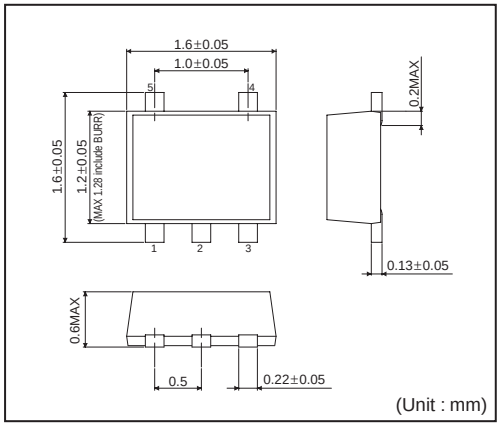


## SSOP3

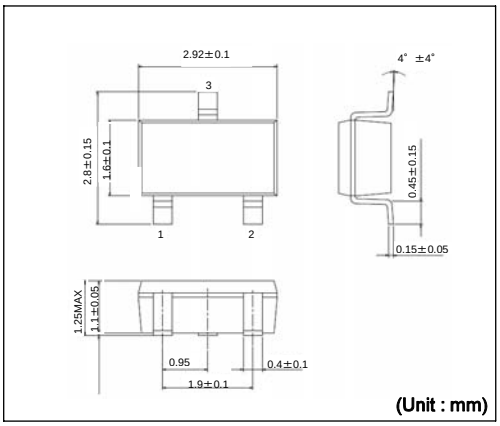


<Tape and Reel information>

| | |
|---|---|
| Tape | Embossed carrier tape |
| Quantity | 3000pcs |
| Direction of feed | TL<br>( The direction is the 1pin of product is at the upper right when you hold reel on the left hand and you pull out the tape on the right hand ) |

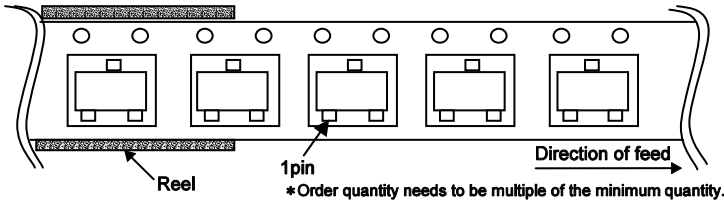


∗Order quantity needs to be multiple of the minimum quantity.


© 2012 ROHM Co., Ltd. All rights reserved.

●**Lineup**

Table 1. Lineup for VSOF5 and SSOP5 Package

| Package Type | VSOF5 or SSOP5 | | | | SSOP5 | | | |
|---|---|---|---|---|---|---|---|---|
| Output Type | Open Drain | | CMOS | | Open Drain | | CMOS | |
| Detection Voltage | Marking | Part Number | Marking | Part Number | Marking | Part Number | Marking | Part Number |
| 6.0V | EW | BD4860 | GW | BD4960 | Cm | BD48E60 | Ff | BD49E60 |
| 5.9V | EV | BD4859 | GV | BD4959 | Ck | BD48E59 | Fe | BD49E59 |
| 5.8V | EU | BD4858 | GU | BD4958 | Ch | BD48E58 | Fd | BD49E58 |
| 5.7V | ET | BD4857 | GT | BD4957 | Cg | BD48E57 | Fc | BD49E57 |
| 5.6V | ES | BD4856 | GS | BD4956 | Cf | BD48E56 | Fb | BD49E56 |
| 5.5V | ER | BD4855 | GR | BD4955 | Ce | BD48E55 | Fa | BD49E55 |
| 5.4V | EQ | BD4854 | GQ | BD4954 | Cd | BD48E54 | Ey | BD49E54 |
| 5.3V | EP | BD4853 | GP | BD4953 | Cc | BD48E53 | Er | BD49E53 |
| 5.2V | EN | BD4852 | GN | BD4952 | Cb | BD48E52 | Ep | BD49E52 |
| 5.1V | EM | BD4851 | GM | BD4951 | Ca | BD48E51 | En | BD49E51 |
| 5.0V | EL | BD4850 | GL | BD4950 | By | BD48E50 | Em | BD49E50 |
| 4.9V | EK | BD4849 | GK | BD4949 | Br | BD48E49 | Ek | BD49E49 |
| 4.8V | EJ | BD4848 | GJ | BD4948 | Bp | BD48E48 | Eh | BD49E48 |
| 4.7V | EH | BD4847 | GH | BD4947 | Bn | BD48E47 | Eg | BD49E47 |
| 4.6V | EG | BD4846 | GG | BD4946 | Bm | BD48E46 | Ef | BD49E46 |
| 4.5V | EF | BD4845 | GF | BD4945 | Bk | BD48E45 | Ee | BD49E45 |
| 4.4V | EE | BD4844 | GE | BD4944 | Bh | BD48E44 | Ed | BD49E44 |
| 4.3V | ED | BD4843 | GD | BD4943 | Bg | BD48E43 | Ec | BD49E43 |
| 4.2V | EC | BD4842 | GC | BD4942 | Bf | BD48E42 | Eb | BD49E42 |
| 4.1V | EB | BD4841 | GB | BD4941 | Be | BD48E41 | Ea | BD49E41 |
| 4.0V | EA | BD4840 | GA | BD4940 | Bd | BD48E40 | Dy | BD49E40 |
| 3.9V | DV | BD4839 | FV | BD4939 | Bc | BD48E39 | Dr | BD49E39 |
| 3.8V | DU | BD4838 | FU | BD4938 | Bb | BD48E38 | Dp | BD49E38 |
| 3.7V | DT | BD4837 | FT | BD4937 | Ba | BD48E37 | Dn | BD49E37 |
| 3.6V | DS | BD4836 | FS | BD4936 | Ay | BD48E36 | Dm | BD49E36 |
| 3.5V | DR | BD4835 | FR | BD4935 | Ar | BD48E35 | Dk | BD49E35 |
| 3.4V | DQ | BD4834 | FQ | BD4934 | Ap | BD48E34 | Dh | BD49E34 |
| 3.3V | DP | BD4833 | FP | BD4933 | An | BD48E33 | Dg | BD49E33 |
| 3.2V | DN | BD4832 | FN | BD4932 | Am | BD48E32 | Df | BD49E32 |
| 3.1V | DM | BD4831 | FM | BD4931 | Ak | BD48E31 | De | BD49E31 |
| 3.0V | DL | BD4830 | FL | BD4930 | Ah | BD48E30 | Dd | BD49E30 |
| 2.9V | DK | BD4829 | FK | BD4929 | Ag | BD48E29 | Dc | BD49E29 |
| 2.8V | DJ | BD4828 | FJ | BD4928 | Af | BD48E28 | Db | BD49E28 |
| 2.7V | DH | BD4827 | FH | BD4927 | Ae | BD48E27 | Da | BD49E27 |
| 2.6V | DG | BD4826 | FG | BD4926 | Ad | BD48E26 | Cy | BD49E26 |
| 2.5V | DF | BD4825 | FF | BD4925 | Ac | BD48E25 | Cr | BD49E25 |
| 2.4V | DE | BD4824 | FE | BD4924 | Ab | BD48E24 | Cp | BD49E24 |
| 2.3V | DD | BD4823 | FD | BD4923 | Aa | BD48E23 | Cn | BD49E23 |


© 2012 ROHM Co., Ltd. All rights reserved.

●**Lineup - continued**

Table 2. Lineup for SSOF3(1pin GND) and SSOP3(3pin GND) Package

| Package Type | SSOP3(1pin GND) | | | | SSOP3(3pin GND) | | | |
|---|---|---|---|---|---|---|---|---|
| Output Type | Open Drain | | CMOS | | Open Drain | | CMOS | |
| Detection Voltage | Marking | Part Number | Marking | Part Number | Marking | Part Number | Marking | Part Number |
| 6.0V | Cm | BD48K60 | Ff | BD49K60 | Kb | BD48L60 | Np | BD49L60 |
| 5.9V | Ck | BD48K59 | Fe | BD49K59 | Ka | BD48L59 | Nn | BD49L59 |
| 5.8V | Ch | BD48K58 | Fd | BD49K58 | Hy | BD48L58 | Nm | BD49L58 |
| 5.7V | Cg | BD48K57 | Fc | BD49K57 | Hr | BD48L57 | Nk | BD49L57 |
| 5.6V | Cf | BD48K56 | Fb | BD49K56 | Hp | BD48L56 | Nh | BD49L56 |
| 5.5V | Ce | BD48K55 | Fa | BD49K55 | Hn | BD48L55 | Ng | BD49L55 |
| 5.4V | Cd | BD48K54 | Ey | BD49K54 | Hm | BD48L54 | Nf | BD49L54 |
| 5.3V | Cc | BD48K53 | Er | BD49K53 | Hk | BD48L53 | Ne | BD49L53 |
| 5.2V | Cb | BD48K52 | Ep | BD49K52 | Hh | BD48L52 | Nd | BD49L52 |
| 5.1V | Ca | BD48K51 | En | BD49K51 | Hg | BD48L51 | Nc | BD49L51 |
| 5.0V | By | BD48K50 | Em | BD49K50 | Hf | BD48L50 | Nb | BD49L50 |
| 4.9V | Br | BD48K49 | Ek | BD49K49 | He | BD48L49 | Na | BD49L49 |
| 4.8V | Bp | BD48K48 | Eh | BD49K48 | Hd | BD48L48 | My | BD49L48 |
| 4.7V | Bn | BD48K47 | Eg | BD49K47 | Hc | BD48L47 | Mr | BD49L47 |
| 4.6V | Bm | BD48K46 | Ef | BD49K46 | Hb | BD48L46 | Mp | BD49L46 |
| 4.5V | Bk | BD48K45 | Ee | BD49K45 | Ha | BD48L45 | Mn | BD49L45 |
| 4.4V | Bh | BD48K44 | Ed | BD49K44 | Gy | BD48L44 | Mm | BD49L44 |
| 4.3V | Bg | BD48K43 | Ec | BD49K43 | Gr | BD48L43 | Mk | BD49L43 |
| 4.2V | Bf | BD48K42 | Eb | BD49K42 | Gp | BD48L42 | Mh | BD49L42 |
| 4.1V | Be | BD48K41 | Ea | BD49K41 | Gn | BD48L41 | Mg | BD49L41 |
| 4.0V | Bd | BD48K40 | Dy | BD49K40 | Gm | BD48L40 | Mf | BD49L40 |
| 3.9V | Bc | BD48K39 | Dr | BD49K39 | Gk | BD48L39 | Me | BD49L39 |
| 3.8V | Bb | BD48K38 | Dp | BD49K38 | Gh | BD48L38 | Md | BD49L38 |
| 3.7V | Ba | BD48K37 | Dn | BD49K37 | Gg | BD48L37 | Mc | BD49L37 |
| 3.6V | Ay | BD48K36 | Dm | BD49K36 | Gf | BD48L36 | Mb | BD49L36 |
| 3.5V | Ar | BD48K35 | Dk | BD49K35 | Ge | BD48L35 | Ma | BD49L35 |
| 3.4V | Ap | BD48K34 | Dh | BD49K34 | Gd | BD48L34 | Ky | BD49L34 |
| 3.3V | An | BD48K33 | Dg | BD49K33 | Gc | BD48L33 | Kr | BD49L33 |
| 3.2V | Am | BD48K32 | Df | BD49K32 | Gb | BD48L32 | Kp | BD49L32 |
| 3.1V | Ak | BD48K31 | De | BD49K31 | Ga | BD48L31 | Kn | BD49L31 |
| 3.0V | Ah | BD48K30 | Dd | BD49K30 | Fy | BD48L30 | Km | BD49L30 |
| 2.9V | Ag | BD48K29 | Dc | BD49K29 | Fr | BD48L29 | Kk | BD49L29 |
| 2.8V | Af | BD48K28 | Db | BD49K28 | Fp | BD48L28 | Kh | BD49L28 |
| 2.7V | Ae | BD48K27 | Da | BD49K27 | Fn | BD48L27 | Kg | BD49L27 |
| 2.6V | Ad | BD48K26 | Cy | BD49K26 | Fm | BD48L26 | Kf | BD49L26 |
| 2.5V | Ac | BD48K25 | Cr | BD49K25 | Fk | BD48L25 | Ke | BD49L25 |
| 2.4V | Ab | BD48K24 | Cp | BD49K24 | Fh | BD48L24 | Kd | BD49L24 |
| 2.3V | Aa | BD48K23 | Cn | BD49K23 | Fg | BD48L23 | Kc | BD49L23 |


© 2012 ROHM Co., Ltd. All rights reserved.

## ●Absolute Maximum Ratings

| Parameter | | Symbol | Limits | Unit |
|---|---|---|---|---|
| Power Supply Voltage | | $V_{DD}$-GND | -0.3 to +10 | V |
| Output Voltage | Nch Open Drain Output | $V_{OUT}$ | GND-0.3 to +10 | V |
| | CMOS Output | | GND-0.3 to $V_{DD}$+0.3 | |
| Output Current | | Io | 70 | mA |
| Power Dissipation | SSOP5 *1*4 | Pd | 540 | mW |
| | SSOP3 *2*4 | | 700 | |
| | VSOF5 *3*4 | | 210 | |
| Operating Temperature | | Topr | -40 to +105 | °C |
| Ambient Storage Temperature | | Tstg | -55 to +125 | °C |

*1 Reduced by 5.4mW/°C when used over 25°C.
*2 Reduced by 7.0mW/°C when used over 25°C.
*3 Reduced by 2.1mW/°C when used over 25°C.
*4 When mounted on ROHM standard circuit board (70mm×70mm×1.6mm, glass epoxy board).

## ●Electrical Characteristics (Unless Otherwise Specified, Ta=-40 to 105°C)

| Parameter | Symbol | Condition | | Limit Min. | Limit Typ. | Limit Max. | Unit |
|---|---|---|---|---|---|---|---|
| Detection Voltage | $V_{DET}$ | RL=470kΩ, VDD=H→L *1 | | $V_{DET}$(T) ×0.99 | $V_{DET}$(T) | $V_{DET}$(T) ×1.01 | V |
| | | VDET=2.5V | Ta=+25°C | 2.475 | 2.5 | 2.525 | |
| | | | Ta=-40°C to 85°C | 2.417 | - | 2.580 | |
| | | | Ta=85°C to 105°C | 2.422 | - | 2.598 | |
| | | VDET=3.0V | Ta=+25°C | 2.970 | 3.0 | 3.030 | |
| | | | Ta=-40°C to 85°C | 2.901 | - | 3.095 | |
| | | | Ta=85°C to 105°C | 2.906 | - | 3.117 | |
| | | VDET=3.3V | Ta=+25°C | 3.267 | 3.3 | 3.333 | |
| | | | Ta=-40°C to 85°C | 3.191 | - | 3.405 | |
| | | | Ta=85°C to 105°C | 3.196 | - | 3.429 | |
| | | VDET=4.2V | Ta=+25°C | 4.158 | 4.2 | 4.242 | |
| | | | Ta=-40°C to 85°C | 4.061 | - | 4.334 | |
| | | | Ta=85°C to 105°C | 4.068 | - | 4.364 | |
| | | VDET=4.8V | Ta=+25°C | 4.752 | 4.8 | 4.848 | |
| | | | Ta=-40°C to 85°C | 4.641 | - | 4.953 | |
| | | | Ta=85°C to 105°C | 4.649 | - | 4.988 | |
| Output Delay Time "L→H" | tPLH | CL=100pF RL=100kΩ Vout=GND→50% *2 | | - | - | 100 | μs |
| Circuit Current when ON | ICC1 | VDD=$V_{DET}$-0.2V *1 | $V_{DET}$=2.3-3.1V | - | 0.51 | 1.53 | μA |
| | | | $V_{DET}$=3.2-4.2V | - | 0.56 | 1.68 | |
| | | | $V_{DET}$=4.3-5.2V | - | 0.60 | 1.80 | |
| | | | $V_{DET}$=5.3-6.0V | - | 0.66 | 1.98 | |
| Circuit Current when OFF | ICC2 | VDD=$V_{DET}$+2.0V *1 | $V_{DET}$=2.3-3.1V | - | 0.75 | 2.25 | μA |
| | | | $V_{DET}$=3.2-4.2V | - | 0.80 | 2.40 | |
| | | | $V_{DET}$=4.3-5.2V | - | 0.85 | 2.55 | |
| | | | $V_{DET}$=5.3-6.0V | - | 0.90 | 2.70 | |
| Operating Voltage Range | VOPL | VOL≤0.4V, Ta=25 to 105°C, RL=470kΩ | | 0.95 | - | - | V |
| | | VOL≤0.4V, Ta=-40 to 25°C, RL=470kΩ | | 1.20 | - | - | |

$V_{DET}$(T) : Standard Detection Voltage(2.3V to 6.0V, 0.1V step)
$R_L$: Pull-up resistor to be connected between VOUT and power supply.
$C_L$: Capacitor to be connected between VOUT and GND.
Design Guarantee. (Outgoing inspection is not done on all products.)
*1 Guaranteed at Ta=25°C.
*2 tPLH:VDD=($V_{DET}$ typ.-0.5V)→($V_{DET}$ typ.+0.5V)


© 2012 ROHM Co., Ltd. All rights reserved.

●**Electrical Characteristics (Unless Otherwise Specified, Ta=-40 to 105°C) - continued**

| Parameter | Symbol | Condition | Limit | | | Unit |
|---|---|---|---|---|---|---|
| | | | Min. | Typ. | Max. | |
| 'Low'Output Voltage (Nch) | $V_{OL}$ | $V_{DD}$=1.5V, $I_{SINK}$ = 0.4 mA, $V_{DET}$=2.3-6.0V | - | - | 0.5 | V |
| | | $V_{DD}$=2.4V, $I_{SINK}$ = 2.0 mA, $V_{DET}$=2.7-6.0V | - | - | 0.5 | |
| 'High'Output Voltage (Pch) (BD49Exxx Series) | $V_{OH}$ | $V_{DD}$=4.8V, $I_{SOURCE}$=0.7 mA, $V_{DET}$(2.3V to 4.2V) | VDD-0.5 | - | - | V |
| | | $V_{DD}$=6.0V, $I_{SOURCE}$=0.9 mA,$V_{DET}$(4.3V to 5.2V) | VDD-0.5 | - | - | |
| | | $V_{DD}$=8.0V, $I_{SOURCE}$=1.1 mA,$V_{DET}$(5.3V to 6.0V) | VDD-0.5 | - | - | |
| Leak Current when OFF (BD48xxx Series) | $I_{leak}$ | $V_{DD}$=$V_{DS}$=10V *1 | - | - | 0.1 | µA |
| Detection Voltage Temperature coefficient | $V_{DET}/\Delta T$ | Ta=-40°C to 105°C (Designed Guarantee) | - | ±100 | ±360 | ppm/°C |
| Hysteresis Voltage | $\Delta V_{DET}$ | $V_{DD}$=L→H→L, $R_L$=470kΩ | $V_{DET}$×0.03 | $V_{DET}$×0.05 | $V_{DET}$×0.08 | V |

$V_{DET}$(T) : Standard Detection Voltage(2.3V to 6.0V, 0.1V step)
$R_L$: Pull-up resistor to be connected between $V_{OUT}$ and power supply.
$C_L$: Capacitor to be connected between $V_{OUT}$ and GND.
Design Guarantee. (Outgoing inspection is not done on all products.)
*1 Guaranteed at Ta=25°C.


© 2012 ROHM Co., Ltd. All rights reserved.

●**Block Diagrams**

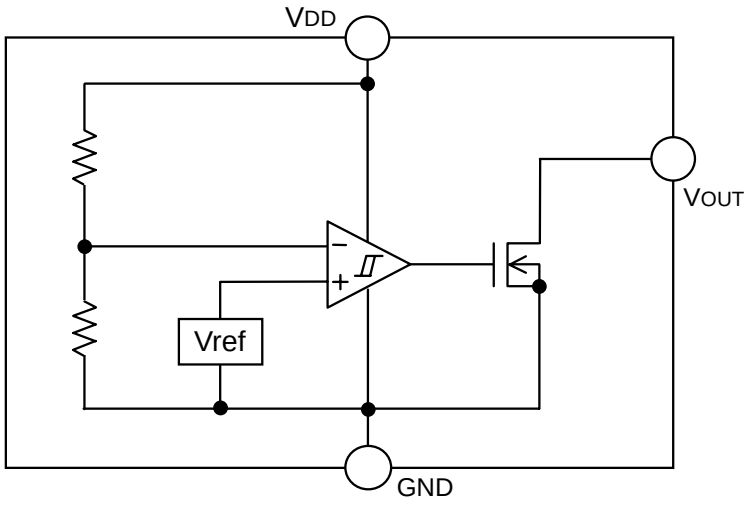


Fig.1 BD48xxx series

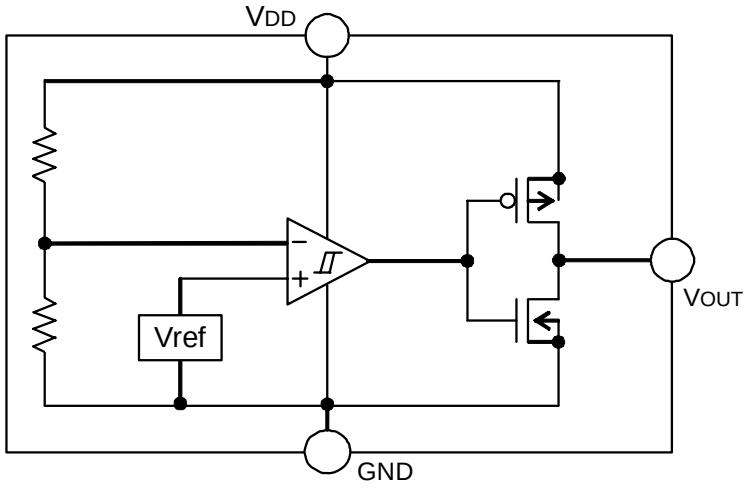


Fig.2 BD49xxx series


© 2012 ROHM Co., Ltd. All rights reserved.

●**Typical Performance Curves**

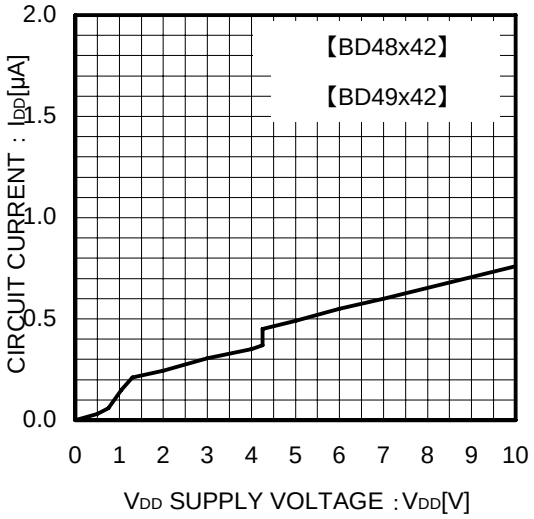


Fig.3 Circuit Current

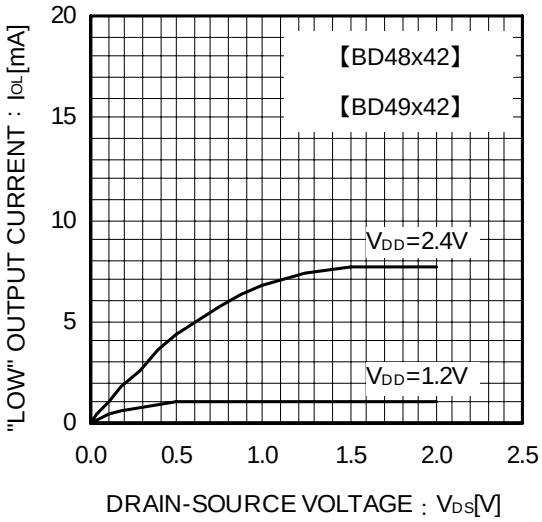


Fig.4 “Low” Output Current

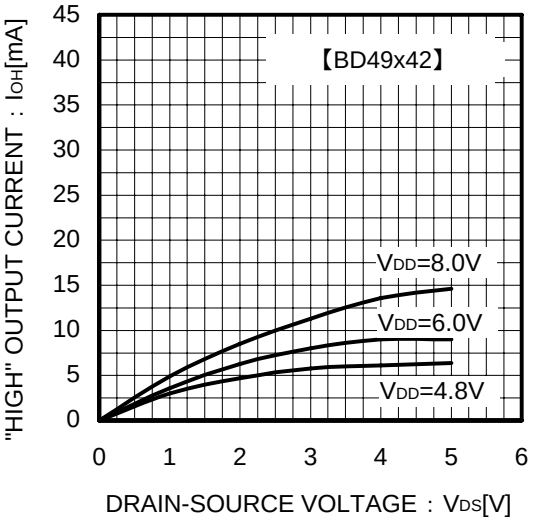


Fig.5 “High” Output Current

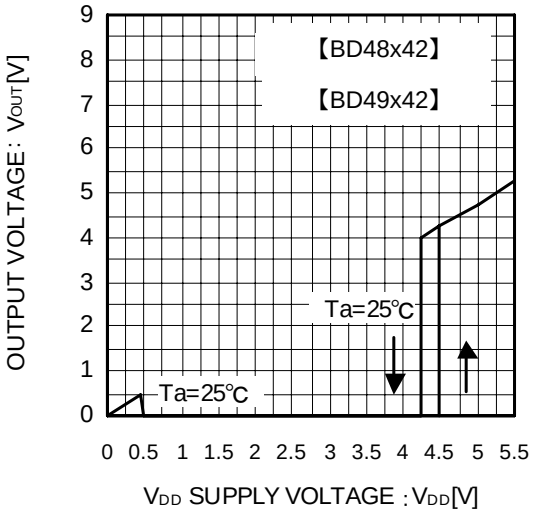


Fig.6 I/O Characteristics


© 2012 ROHM Co., Ltd. All rights reserved.

●**Typical Performance Curves – continued**

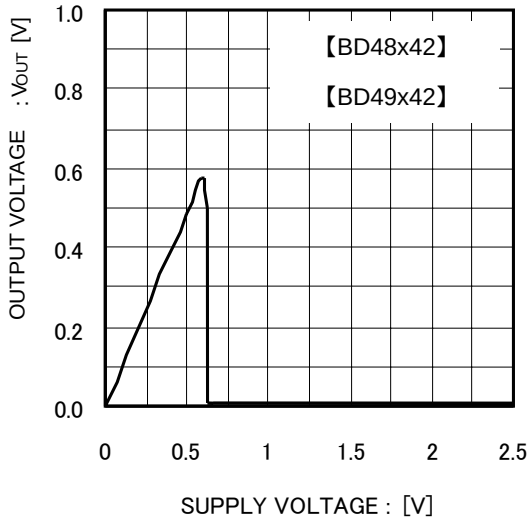


Fig.7 Operating Limit Voltage

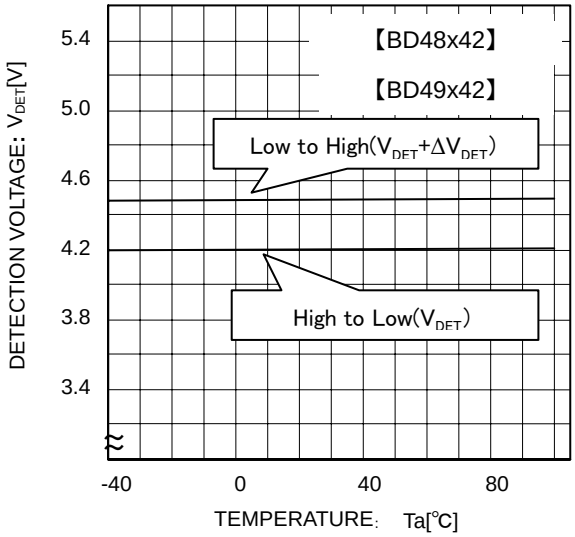


Fig.8 Detection Voltage
Release Voltage

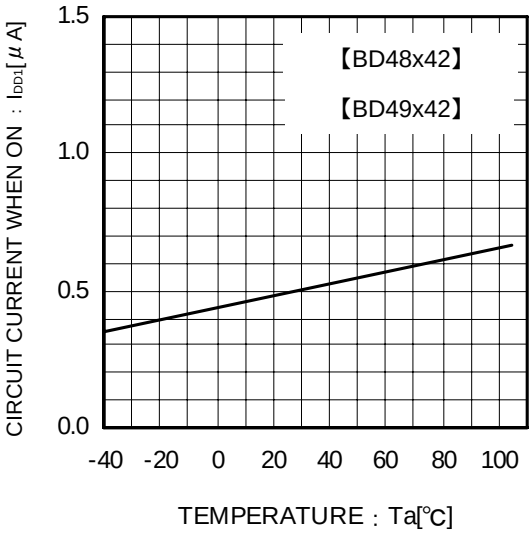


Fig.9 Circuit Current when ON

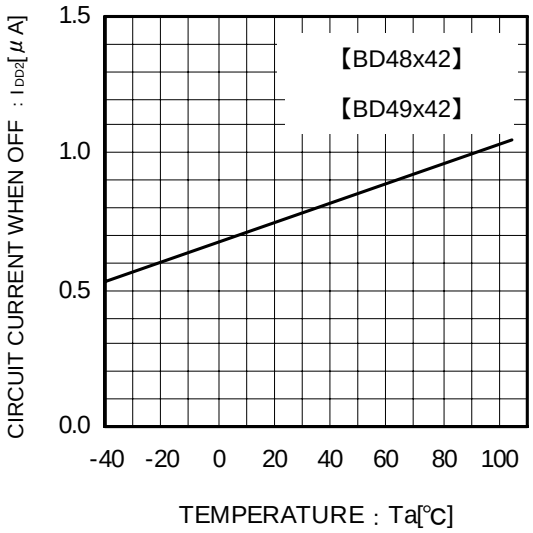


Fig.10 Circuit Current when OFF


© 2012 ROHM Co., Ltd. All rights reserved.

●**Typical Performance Curves – continued**

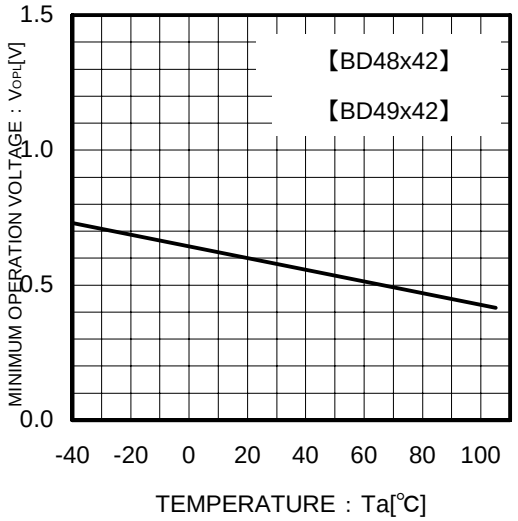


Fig.11 Operating Limit Voltage


© 2012 ROHM Co., Ltd. All rights reserved.

## ●Application Information

### Explanation of Operation

For both the open drain type (Fig.12) and the CMOS output type (Fig.13), the detection and release voltages are used as threshold voltages. When the voltage applied to the $V_{DD}$ pins reaches the appropriate threshold voltage, the $V_{OUT}$ terminal voltage switches from either “High” to “Low” or from “Low” to “High”. Please refer to the Timing Waveform and Electrical Characteristics for information on hysteresis.

Because the BD48xxx series uses an open drain output type, it is necessary to connect a pull-up resistor to $V_{DD}$ or another power supply if needed [The output “High” voltage ($V_{OUT}$) in this case becomes $V_{DD}$ or the voltage of the other power supply].

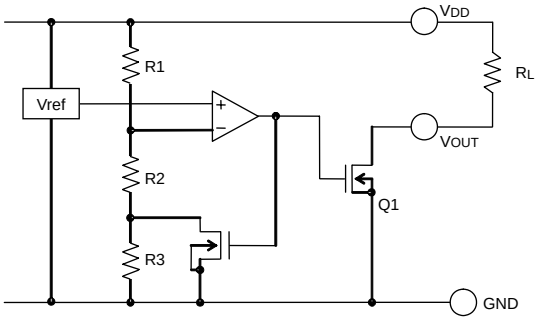


Fig.12 (BD48xxx series Internal Block Diagram)

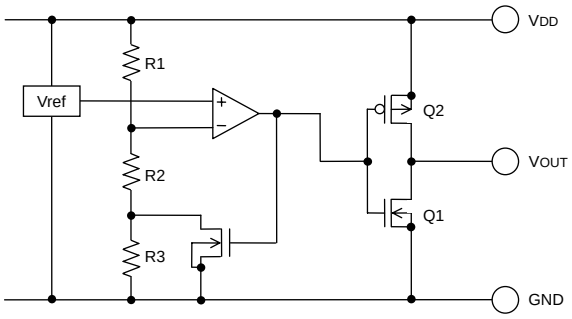


Fig.13 (BD49xxx series Internal Block Diagram)

### Reference Data

Examples of Leading ($t_{PLH}$) and Falling ($t_{PHL}$) Output

| Part Number | $t_{PLH}$ (µs) | $t_{PHL}$ (µs) |
|---|---|---|
| BD48x45 | 39.5 | 87.8 |
| BD49x45 | 32.4 | 52.4 |
| | $V_{DD}$=4.3V→5.1V | $V_{DD}$=5.1V→4.3V |

*These data are for reference only.
The figures will vary with the application, so please check actual operating conditions before use.

### Timing Waveform

Example: the following shows the relationship between the input voltages $V_{DD}$ and the output voltage $V_{OUT}$ when the input power supply voltage $V_{DD}$ swept up and down (the circuits are those in Fig.12 and 13).

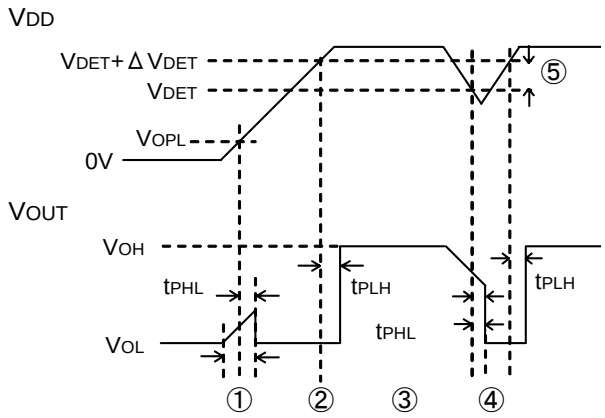


Fig.14 Timing Waveform

① When the power supply is turned on, the output is unstable from after over the operating limit voltage ($V_{OPL}$) until $t_{PHL}$. Therefore it is possible that the reset signal is not outputted when the rise time of $V_{DD}$ is faster than $t_{PHL}$.

② When $V_{DD}$ is greater than $V_{OPL}$ but less than the reset release voltage ($V_{DET}$ + $\Delta V_{DET}$), the output voltages will switch to Low.

③ If $V_{DD}$ exceeds the reset release voltage ($V_{DET}$ + $\Delta V_{DET}$), then $V_{OUT}$ switches from L to H.

④ If $V_{DD}$ drops below the detection voltage ($V_{DET}$) when the power supply is powered down or when there is a power supply fluctuation, $V_{OUT}$ switches to L (with a delay of $t_{PHL}$).

⑤ The potential difference between the detection voltage and the release voltage is known as the hysteresis width ($\Delta V_{DET}$). The system is designed such that the output does not toggle with power supply fluctuations within this hysteresis width, preventing malfunctions due to noise.


© 2012 ROHM Co., Ltd. All rights reserved.

●**Circuit Applications**

1) Examples of a common power supply detection reset circuit.

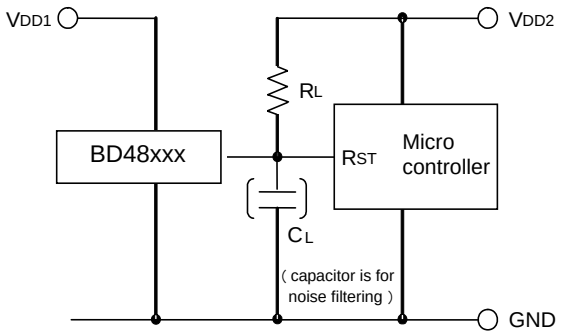


Fig.15 Open Drain Output Type

Application examples of BD48xxx series (Open Drain output type) and BD49xxx series (CMOS output type) are shown on the left.

CASE1: Power supply of the microcontroller ($V_{DD2}$) differs from the power supply of the reset detection IC ($V_{DD1}$).
Use an open drain output type (BD48xxx) device with a load resistance $R_L$ attached as shown in figure 15.

CASE2: Power supply of the microcontroller ($V_{DD1}$) is same as the power supply of the reset detection IC ($V_{DD1}$).
Use a CMOS output type (BD49xxx) device or an open drain device with a pull up resistor between output and VDD1.

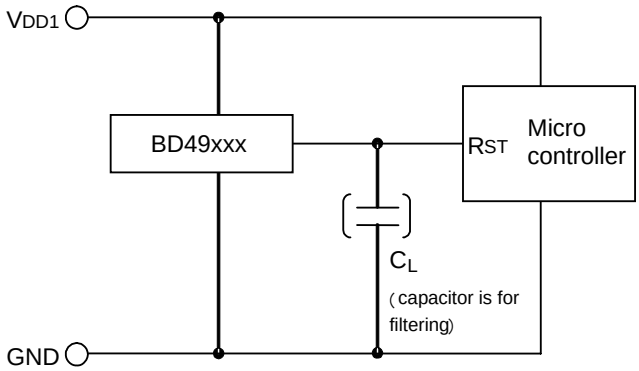


Fig.16 CMOS Output Type

When a capacitance $C_L$ for noise filtering is connected to the $V_{OUT}$ pin (the reset signal input terminal of the microcontroller), please take into account the rise and fall waveform of the output voltage ($V_{OUT}$).

The Electrical characteristics were measured using $R_L$= 470kΩ and $C_L$ = 100pF.

2) The following is an example of a circuit application in which an OR connection between two types of detection voltage resets the microcontroller.

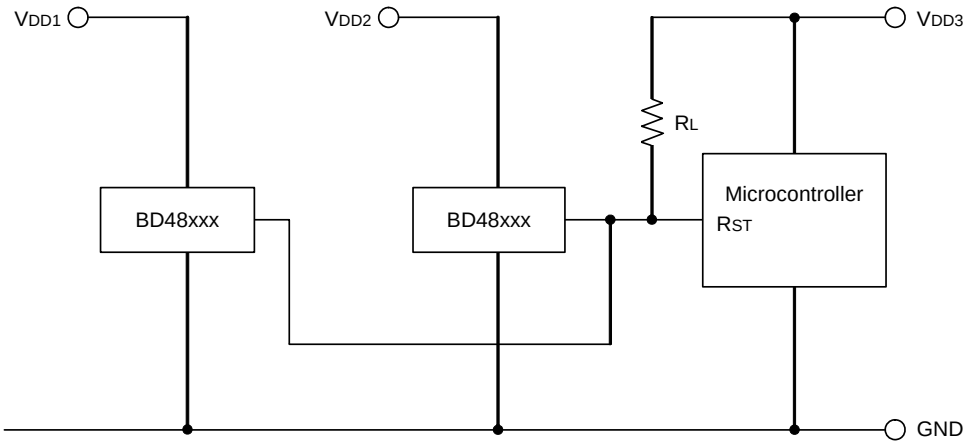


Fig.17

To reset the microcontroller when many independent power supplies are used in the system, OR connect an open drain output type (BD48xxx series) to the microcontroller's input with pull-up resistor to the supply voltage of the microcontroller ($V_{DD3}$) as shown in Fig. 17. By pulling-up to $V_{DD3}$, output "High" voltage of micro-controller power supply is possible.


© 2012 ROHM Co., Ltd. All rights reserved.

3) Examples of the power supply with resistor dividers

In applications wherein the power supply voltage of an IC comes from a resistor divider circuit, an in-rush current will flow into the circuit when the output level switches from “High” to “Low” or vice versa. In-rush current is a sudden surge of current that flows from the power supply (VDD) to ground (GND) as the output logic changes its state. This current flow may cause malfunction in the systems operation such as output oscillations, etc.

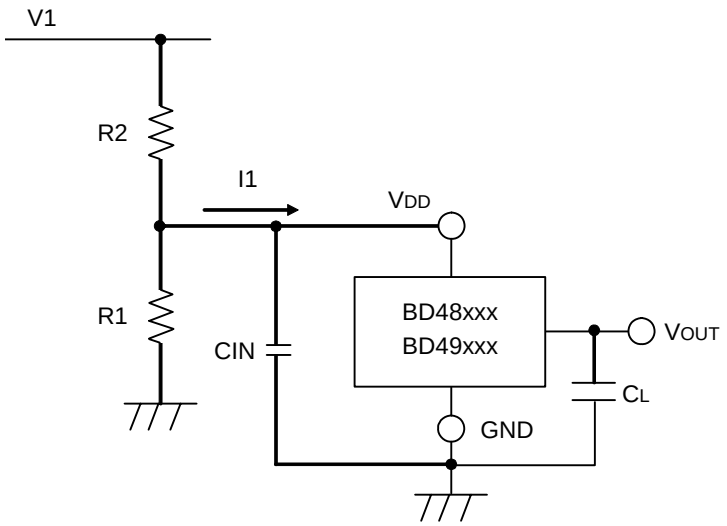


Fig.18

When an in-rush current (I1) flows into the circuit (Refer to Fig. 18) at the time when output switches from “Low” to “High”, a voltage drop of I1×R2 (input resistor) will occur in the circuit causing the VDD supply voltage to decrease. When the VDD voltage drops below the detection voltage, the output will switch from “High” to “Low”. While the output voltage is at “Low” condition, in-rush current will stop flowing and the voltage drop will be reduced. As a result, the output voltage will switches again from “Low” to “High” which causes an in-rush current and a voltage drop. This operation repeats and will result to oscillation.

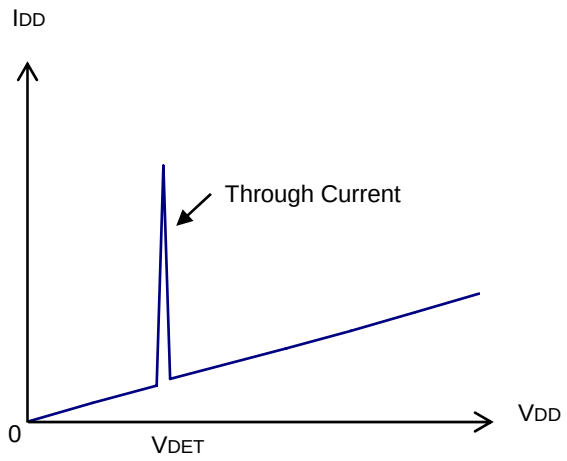


Fig.19 Current Consumption vs. Power Supply Voltage


© 2012 ROHM Co., Ltd. All rights reserved.

## ●Operational Notes

1) Absolute maximum ratings
Operating the IC over the absolute maximum ratings may damage the IC. The damage can either be a short circuit between pins or an open circuit between pins. Therefore, it is important to consider circuit protection measures, such as adding a fuse, in case the IC is operated over the absolute maximum ratings.

2) Ground Voltage
The voltage of the ground pin must be the lowest voltage of all pins of the IC at all operating conditions. Ensure that no pins are at a voltage below the ground pin at any time, even during transient condition.

3) Recommended operating conditions
These conditions represent a range within which the expected characteristics of the IC can be approximately obtained. The electrical characteristics are guaranteed under the conditions of each parameter.

4) Bypass Capacitor for Noise Rejection
To help reject noise, put a 1µF capacitor between $V_{DD}$ pin and GND and 1000pF capacitor between $V_{OUT}$ pin and GND. Be careful when using extremely big capacitor as transient response will be affected.

5) Short between pins and mounting errors
Be careful when mounting the IC on printed circuit boards. The IC may be damaged if it is mounted in a wrong orientation or if pins are shorted together. Short circuit may be caused by conductive particles caught between the pins.

6) Operation under strong electromagnetic field
Operating the IC in the presence of a strong electromagnetic field may cause the IC to malfunction.

7) The $V_{DD}$ line impedance might cause oscillation because of the detection current.

8) A $V_{DD}$ to GND capacitor (as close connection as possible) should be used in high $V_{DD}$ line impedance condition.

9) Lower than the mininum input voltage puts the $V_{OUT}$ in high impedance state, and it must be $V_{DD}$ in pull up ($V_{DD}$) condition.

10) External parameters
The recommended parameter range for $R_L$ is 10kΩ to 1MΩ. There are many factors (board layout, etc) that can affect characteristics. Please verify and confirm using practical applications.

11) Power on reset operation
Please note that the power on reset output varies with the $V_{DD}$ rise time. Please verify the behavior in the actual operation.

12) Testing on application boards
When testing the IC on an application board, connecting a capacitor directly to a low-impedance output pin may subject the IC to stress. Always discharge capacitors completely after each process or step. The IC's power supply should always be turned off completely before connecting or removing it from the test setup during the inspection process. To prevent damage from static discharge, ground the IC during assembly and use similar precautions during transport and storage.

13) Rush current
When power is first supplied to the IC, rush current may flow instantaneously. It is possible that the charge current to the parasitic capacitance of internal photo diode or the internal logic may be unstable. Therefore, give special consideration to power coupling capacitance, power wiring, width of GND wiring, and routing of connections.

14) This IC has extremely high impedance terminals. Small leak current due to the uncleanness of PCB surface might cause unexpected operations. Application values in these conditions should be selected carefully. If 10MΩ leakage is assumed between the $C_T$ terminal and the GND terminal, 1MΩ connection between the CT terminal and the $V_{DD}$ terminal would be recommended. Also, if the leakage is assumed between the Vout terminal and the GND terminal, the pull up resistor should be less than 1/10 of the assumed leak resistance.


© 2012 ROHM Co., Ltd. All rights reserved.

# Notice

## ●General Precaution

1) Before you use our Products, you are requested to carefully read this document and fully understand its contents. ROHM shall not be in any way responsible or liable for failure, malfunction or accident arising from the use of any ROHM's Products against warning, caution or note contained in this document.

2) All information contained in this document is current as of the issuing date and subject to change without any prior notice. Before purchasing or using ROHM's Products, please confirm the latest information with a ROHM sales representative.

## ●Precaution on using ROHM Products

1) Our Products are designed and manufactured for application in ordinary electronic equipments (such as AV equipment, OA equipment, telecommunication equipment, home electronic appliances, amusement equipment, etc.). If you intend to use our Products in devices requiring extremely high reliability (such as medical equipment, transport equipment, traffic equipment, aircraft/spacecraft, nuclear power controllers, fuel controllers, car equipment including car accessories, safety devices, etc.) and whose malfunction or failure may cause loss of human life, bodily injury or serious damage to property ("Specific Applications"), please consult with the ROHM sales representative in advance. Unless otherwise agreed in writing by ROHM in advance, ROHM shall not be in any way responsible or liable for any damages, expenses or losses incurred by you or third parties arising from the use of any ROHM's Products for Specific Applications.

2) ROHM designs and manufactures its Products subject to strict quality control system. However, semiconductor products can fail or malfunction at a certain rate. Please be sure to implement, at your own responsibilities, adequate safety measures including but not limited to fail-safe design against the physical injury, damage to any property, which a failure or malfunction of our Products may cause. The following are examples of safety measures:
   [a] Installation of protection circuits or other protective devices to improve system safety
   [b] Installation of redundant circuits to reduce the impact of single or multiple circuit failure

3) Our Products are designed and manufactured for use under standard conditions and not under any special or extraordinary environments or conditions, as exemplified below. Accordingly, ROHM shall not be in any way responsible or liable for any damages, expenses or losses arising from the use of any ROHM's Products under any special or extraordinary environments or conditions. If you intend to use our Products under any special or extraordinary environments or conditions (as exemplified below), your independent verification and confirmation of product performance, reliability, etc, prior to use, must be necessary:
   [a] Use of our Products in any types of liquid, including water, oils, chemicals, and organic solvents
   [b] Use of our Products outdoors or in places where the Products are exposed to direct sunlight or dust
   [c] Use of our Products in places where the Products are exposed to sea wind or corrosive gases, including $Cl_2$, $H_2S$, $NH_3$, $SO_2$, and $NO_2$
   [d] Use of our Products in places where the Products are exposed to static electricity or electromagnetic waves
   [e] Use of our Products in proximity to heat-producing components, plastic cords, or other flammable items
   [f] Sealing or coating our Products with resin or other coating materials
   [g] Use of our Products without cleaning residue of flux (even if you use no-clean type fluxes, cleaning residue of flux is recommended); or Washing our Products by using water or water-soluble cleaning agents for cleaning residue after soldering
   [h] Use of the Products in places subject to dew condensation

4) The Products are not subject to radiation-proof design.

5) Please verify and confirm characteristics of the final or mounted products in using the Products.

6) In particular, if a transient load (a large amount of load applied in a short period of time, such as pulse) is applied, confirmation of performance characteristics after on-board mounting is strongly recommended. Avoid applying power exceeding normal rated power; exceeding the power rating under steady-state loading condition may negatively affect product performance and reliability.

7) De-rate Power Dissipation (Pd) depending on Ambient temperature (Ta). When used in sealed area, confirm the actual ambient temperature.

8) Confirm that operation temperature is within the specified range described in the product specification.

9) ROHM shall not be in any way responsible or liable for failure induced under deviant condition from what is defined in this document.


© 2012 ROHM Co., Ltd. All rights reserved.

●Precaution for Mounting / Circuit board design

1) When a highly active halogenous (chlorine, bromine, etc.) flux is used, the residue of flux may negatively affect product performance and reliability.

2) In principle, the reflow soldering method must be used; if flow soldering method is preferred, please consult with the ROHM representative in advance.

For details, please refer to ROHM Mounting specification

●Precautions Regarding Application Examples and External Circuits

1) If change is made to the constant of an external circuit, please allow a sufficient margin considering variations of the characteristics of the Products and external components, including transient characteristics, as well as static characteristics.

2) You agree that application notes, reference designs, and associated data and information contained in this document are presented only as guidance for Products use. Therefore, in case you use such information, you are solely responsible for it and you must exercise your own independent verification and judgment in the use of such information contained in this document. ROHM shall not be in any way responsible or liable for any damages, expenses or losses incurred by you or third parties arising from the use of such information.

●Precaution for Electrostatic

This Product is electrostatic sensitive product, which may be damaged due to electrostatic discharge. Please take proper caution in your manufacturing process and storage so that voltage exceeding the Products maximum rating will not be applied to Products. Please take special care under dry condition (e.g. Grounding of human body / equipment / solder iron, isolation from charged objects, setting of Ionizer, friction prevention and temperature / humidity control).

●Precaution for Storage / Transportation

1) Product performance and soldered connections may deteriorate if the Products are stored in the places where:
   [a] the Products are exposed to sea winds or corrosive gases, including Cl2, H2S, NH3, SO2, and NO2
   [b] the temperature or humidity exceeds those recommended by ROHM
   [c] the Products are exposed to direct sunshine or condensation
   [d] the Products are exposed to high Electrostatic

2) Even under ROHM recommended storage condition, solderability of products out of recommended storage time period may be degraded. It is strongly recommended to confirm solderability before using Products of which storage time is exceeding the recommended storage time period.

3) Store / transport cartons in the correct direction, which is indicated on a carton with a symbol. Otherwise bent leads may occur due to excessive stress applied when dropping of a carton.

4) Use Products within the specified time after opening a humidity barrier bag. Baking is required before using Products of which storage time is exceeding the recommended storage time period.

●Precaution for Product Label

QR code printed on ROHM Products label is for ROHM's internal use only.

●Precaution for Disposition

When disposing Products please dispose them properly using an authorized industry waste company.

●Precaution for Foreign Exchange and Foreign Trade act

Since our Products might fall under controlled goods prescribed by the applicable foreign exchange and foreign trade act, please consult with ROHM representative in case of export.

●Precaution Regarding Intellectual Property Rights

1) All information and data including but not limited to application example contained in this document is for reference only. ROHM does not warrant that foregoing information or data will not infringe any intellectual property rights or any other rights of any third party regarding such information or data. ROHM shall not be in any way responsible or liable for infringement of any intellectual property rights or other damages arising from use of such information or data.:

2) No license, expressly or implied, is granted hereby under any intellectual property rights or other rights of ROHM or any third parties with respect to the information contained in this document.


© 2012 ROHM Co., Ltd. All rights reserved.

●Other Precaution

1) The information contained in this document is provided on an “as is” basis and ROHM does not warrant that all information contained in this document is accurate and/or error-free. ROHM shall not be in any way responsible or liable for any damages, expenses or losses incurred by you or third parties resulting from inaccuracy or errors of or concerning such information.

2) This document may not be reprinted or reproduced, in whole or in part, without prior written consent of ROHM.

3) The Products may not be disassembled, converted, modified, reproduced or otherwise changed without prior written consent of ROHM.

4) In no event shall you use in any way whatsoever the Products and the related technical information contained in the Products or this document for any military purposes, including but not limited to, the development of mass-destruction weapons.

5) The proper names of companies or products described in this document are trademarks or registered trademarks of ROHM, its affiliated companies or third parties.


© 2012 ROHM Co., Ltd. All rights reserved.

Общество с ограниченной ответственностью «МосЧип» ИНН 7719860671 / КПП 771901001
Адрес: 105318, г.Москва, ул.Щербаковская д.3, офис 1107

**Данный компонент на территории Российской Федерации**

**Вы можете приобрести в компании MosChip.**

Для оперативного оформления запроса Вам необходимо перейти по данной ссылке:

http://moschip.ru/get-element

Вы можете разместить у нас заказ для любого Вашего проекта, будь то серийное производство или разработка единичного прибора.

В нашем ассортименте представлены ведущие мировые производители активных и пассивных электронных компонентов.

Нашей специализацией является поставка электронной компонентной базы двойного назначения, продукции таких производителей как XILINX, Intel (ex.ALTERA), Vicor, Microchip, Texas Instruments, Analog Devices, Mini-Circuits, Amphenol, Glenair.

Сотрудничество с глобальными дистрибьюторами электронных компонентов, предоставляет возможность заказывать и получать с международных складов практически любой перечень компонентов в оптимальные для Вас сроки.

На всех этапах разработки и производства наши партнеры могут получить квалифицированную поддержку опытных инженеров.

Система менеджмента качества компании отвечает требованиям в соответствии с ГОСТ Р ИСО 9001, ГОСТ РВ 0015-002 и ЭС РД 009

**Офис по работе с юридическими лицами:**

105318, г.Москва, ул.Щербаковская д.3, офис 1107, 1118, ДЦ «Щербаковский»

Телефон: +7 495 668-12-70 (многоканальный)

Факс: +7 495 668-12-70 (доб.304)

E-mail: info@moschip.ru

Skype отдела продаж:
moschip.ru
moschip.ru_4
moschip.ru_6
moschip.ru_9