OMRON

AC Servomotors/ Servo Drives

# G Series

## A Wide Variation of Models with the Functions and Performance Demanded in Servo Systems

» Easy adjustment

» Quickly suppress vibration

» Built-in MECHATROLINK communications interface

realizing

# Complete Reinforcement of Functions and Performance Demanded in Servo Systems

## Let the G Series solve your equipment problems.

**Increase Productivity!**

The many variations provided by G-series Servo Systems features high-precision positioning with improved response and vibration control, making it suitable for a variety of applications.

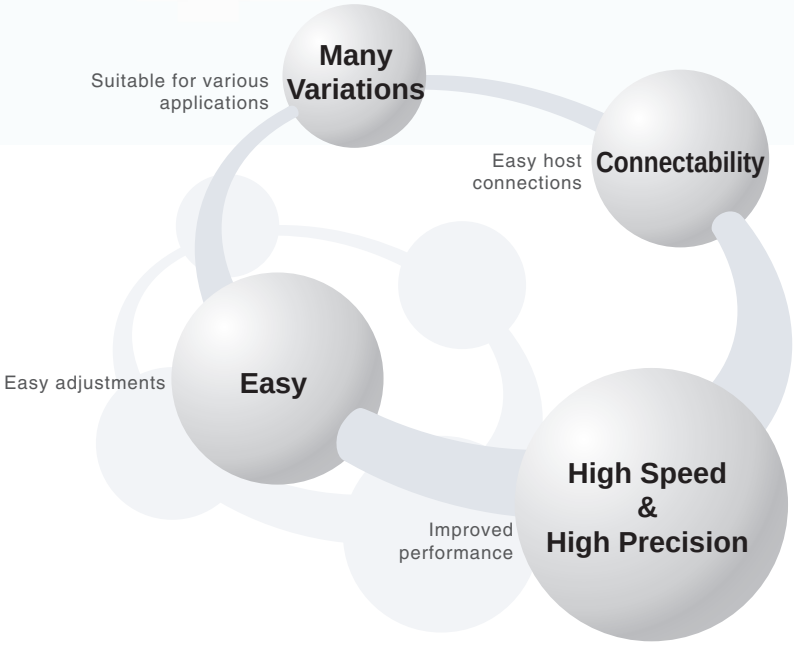

# Integrated Development Environment Cut Your TCO from Design to Maintenance.

## *MECHATROLINK-II-compatible AC Servomotors/Servo Drives*

### One Cable Enables Setting and Monitoring Parameters

Connect the PLC and Servo Drive with a single cable to reduce wiring. What's more, the parameters for many Servo Drives can be set and monitored at the same time between a personal computer and the Controller.

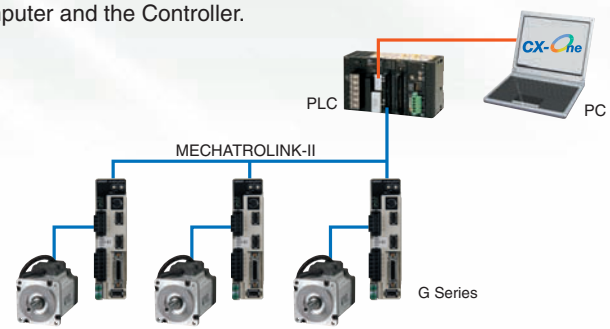


Note: MECHATROLINK-II is a registered trademark of the MECHATROLINK Members Association.

## *CX-One*

### Easily Program Positioning and Communications

With the CX-One FA Integrated Tool Package, parameters settings, program design, debugging, operation monitoring, alarms, error monitoring, and maintenance of the Servo System can be handled with ease.

**Setting & Programming**
Easy programming with the Smart FB Library

**Parameter Editing & Monitoring**
The Servomotor parameters can be edited, monitored, and saved with the CX-Drive.

**Alarm & Maintenance**
Easy monitoring of the NC Unit & Drive errors

# INDEX


Features — 2
Selection Guide — 6

**G-series Servomotors and Servo Drives with General-purpose Inputs**

System Configuration — 8
Interpreting Model Numbers — 10
Ordering Information — 12
Servo Drive-Servomotor Combinations — 21
Servomotor and Decelerator Combinations — 22
Servo Relay Units and Cables — 23
Motion Control Unit Cables — 23
Cable Combinations — 24
Servo Drive Specifications — 29
Servomotor Specifications — 31
Decelerator Specifications — 42
Encoder, External Regeneration Resistors, Reactor and Parameter Unit Specifications — 46
Connections — 48
I/O Circuit Diagrams — 55
Components and Functions — 57
Parameter — 59
Dimensions — 62
About Manuals — 87

**G-series Servomotors and Servo Drives with MECHATROLINK-II Communications**

System Configuration — 88
Interpreting Model Numbers — 90
Ordering Information — 92
Servo Drive-Servomotor Combinations — 102
Servomotor and Decelerator Combinations — 103
Cable Combinations — 104
Servo Drive Specifications — 108
Servomotor Specifications — 111
Decelerator Specifications — 122
Encoder, External Regeneration Resistors, Reactor and Parameter Unit Specifications — 126
Connections — 128
I/O Circuit Diagrams — 133
Components and Functions — 134
Parameter — 136
Dimensions — 138
About Manuals — 163


Note: CX-Drive (version 1.61) support for G-series Servo Drives can be obtained by using the CX-One V2 auto-update function from May 30, 2008.

Note: CX-Drive (version 1.62) support for G-series Servo Drivers with MECHATROLINK-II Communications can be obtained by using the CX-One V2/V3 auto-update function from July 31, 2008.

OMRON, for Easy Setup, Easy Operation, Easy Connections, and Easy Monitoring

# Wider Range of Compact Servomotors and Compatibility, Plus Fast Positioning with

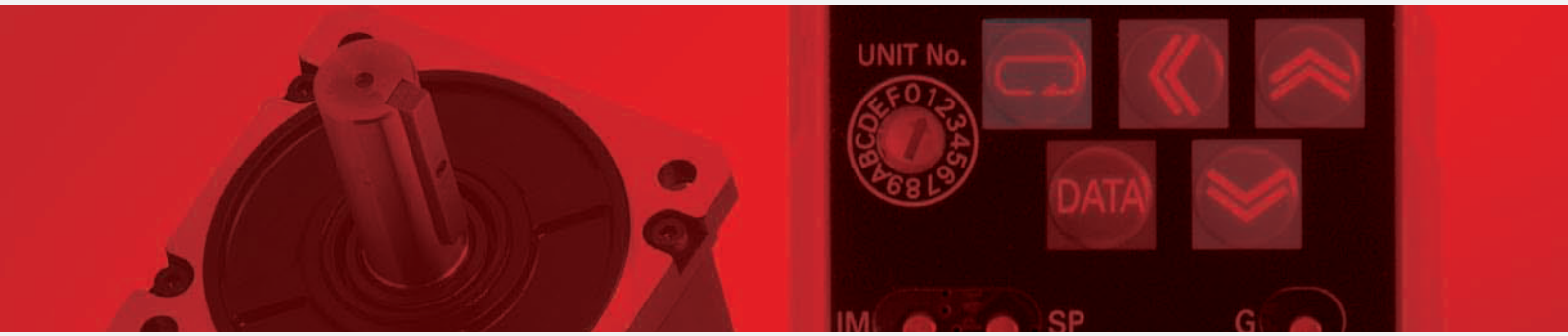


## Easy!

### Easy Adjustment

**Realtime autotuning sets the optimum gain.**

An autotuning function calculates the device load in realtime and automatically sets the optimum gain, simplifying the adjustment procedure.

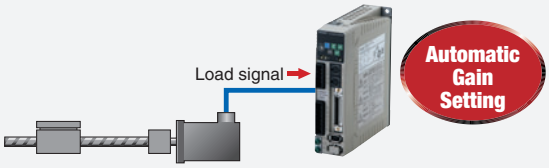


### Select the Optimum Motor

**A wide range of Servomotors is available to meet application needs.**

You can select a suitable Servomotor from a wide range of Servomotor capacities to cater to various applications.

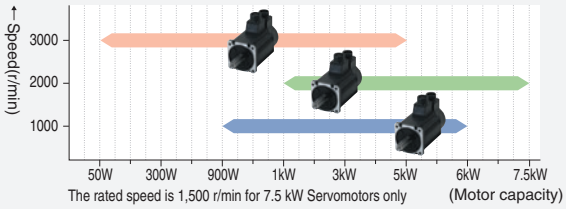


### Reduce Control Panel Installation Space

**Even Smaller Servo Drives.**

The footprint of the Servo Drives has been reduced by 32% compared to previous OMRON models, helping to reduce control panel size.

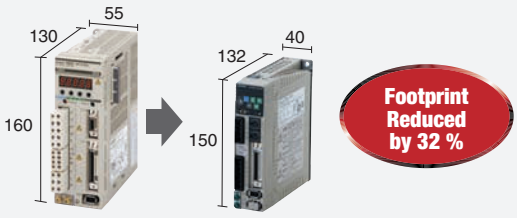


## Advanced Performance!

### Reduce Tact Time

**Significantly better speed response frequency.**

The speed response frequency has been improved by a factor of 2.5 compared to previous OMRON models. The stabilization time has been reduced, increasing machine speed and response performance.

### Reduce Tact Time

**Fast positioning with improved command pulse frequency performance.**

The command pulse frequency is 4 times faster than previous OMRON models. This enables fast, accurate control.

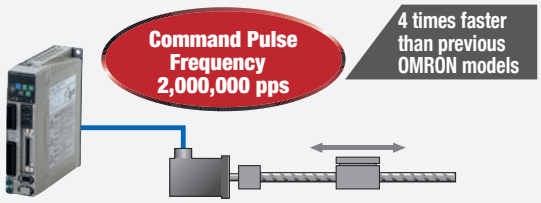


### Improve Processing Accuracy

**All Servomotors contain a 17-bit encoder*1 for greater accuracy.**

Positioning is twice as accurate as previous OMRON models*2 for submicron accuracy. This enables stable control in the low speed range.

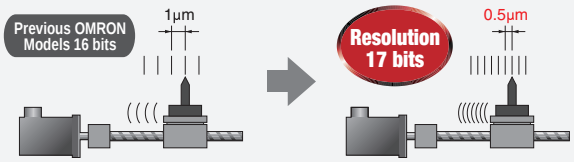


*1 For Servomotors with absolute encoders.
*2 Compared to previous OMRON models. (Servomotors with absolute encoders, 750 W max.)

# Servo Drives with Increased Machine Improved Response and Vibration Control

Achieve Maximum Machine Performance with the G Series

# Advanced Functionality!

## Reduce Mechanical Vibration

### Quick suppression of vibration with an adaptive filter.

Even if the resonant frequency changes, realtime evaluation automatically follows the changes to reduce the effect of vibration due to low mechanical rigidity, such as for conveyer belts.

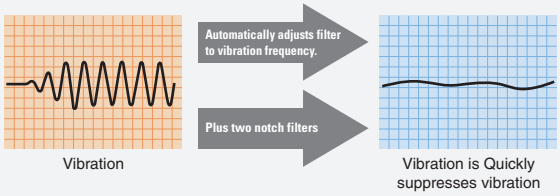


## Reduce Tact Time

### Reduce mechanical vibration with the vibration control function.

By removing the vibration frequency components between the stop position and the intermediate position, vibration that occurs due to low mechanical rigidity can be suppressed. (Control for two vibration frequencies)

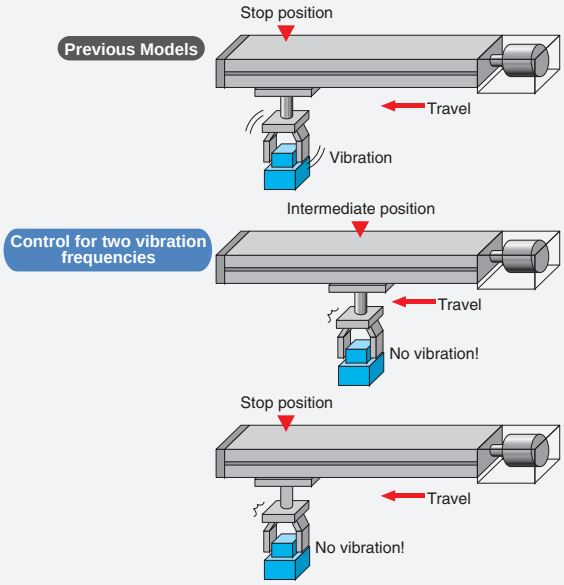


## Flexible Application

### Change the command control mode as required by the application.

Select from position control, speed control, and torque control for use in applications such as the pressing, tension, and injection.

**Application Examples**

- **Attaching Parts, Pressing, and Tightening Screws**

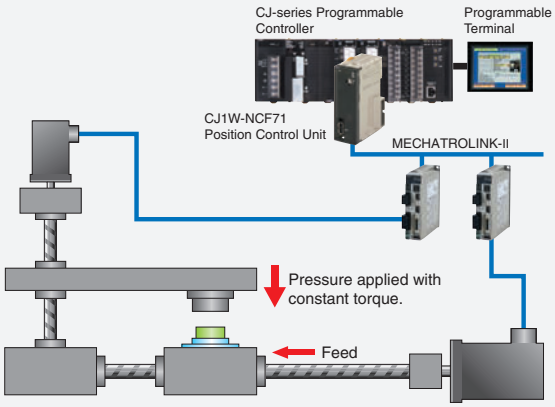


- **Rollers and Conveyers**

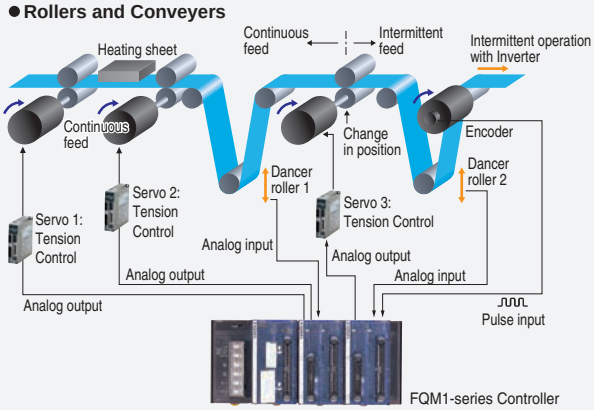

# The optimum combination can be found from to handle various applications.

## Servo Drive Variations

| | | | G Series | |
|---|---|---|---|---|
| | | | Servo Drives with General-purpose Inputs | MECHATROLINK-II* Compatible Servo Drives |
| | | | R88D-GT | R88D-GN□-ML2 |
| Power supply | AC100V | | Single-phase | Single-phase |
| Power supply | AC200V | | Single-phase, Single/Three-phase, Three-phase | Single-phase, Single/Three-phase, Three-phase |
| Motor capacity | AC100V | | 50 W, 100 W, 200 W, 400 W | 50 W, 100 W, 200 W, 400 W |
| Motor capacity | AC200V | Single-phase | 50 W, 100 W, 200 W, 400 W | 50 W, 100 W, 200 W, 400 W |
| Motor capacity | AC200V | Single/Three-phase | 750 W, 900 W, 1 kW, 1.5 kW | 750 W, 900 W, 1 kW, 1.5 kW |
| Motor capacity | AC200V | Three-phase | 2 kW, 3 kW, 4 kW, 4.5 kW, 5 kW, 6 kW, 7.5 kW | 2 kW, 3 kW, 4 kW, 4.5 kW, 5 kW, 6 kW, 7.5 kW |
| Interface | Command type | | Pulse train, Analog | ML2 |
| Control modes | Control modes | | Position control, Speed control, Torque control | Position control, Speed control, Torque control |
| Control modes | Control mode switching | | Mode switching | Mode switching |
| Tuning functions | Vibration control | | Vibration control *1 | Vibration control *1 |
| Tuning functions | Autotuning | | AUTO | AUTO |
| Tuning functions | Realtime autotuning | | FIT GAIN, Adaptive filter *2 | Adaptive filter *2 |
| Servo Drive functions | Torque limits | | Torque limit *1 | Torque limit *1 |
| Servo Drive functions | Encoder output | | ABS, INC | ABS, INC |
| Servo Drive functions | Internal set speeds | | 8 speeds | —— |

*1. Two limits. *2. One adaptive filter and two notch filters.

## Functions

**Pulse train**: The speed and travel distance are input to the Servo as pulse trains.

**Analog**: The speed and torque are input to the Servo as analog signals.

**ML2**: MECHATROLINK-II high-speed Servo communications motion network. (See note.)

**Position control**: Control is applied to move to the target position and then stop at the target position.

**Speed control**: Control is applied to change the linear or rotational speed. For example, speed control is used for applications such as turning grindstones, controlling welding speeds, and controlling feeding speeds.

**Torque control**: Control is applied to adjust the rotational force. Torque control is suitable for applications such as parts insertion, pressing, and screw tightening.

**Mode switching** Command control mode switching: Switching is possible between any two of the three control modes: position control, speed control, and torque control.

**Vibration control** Vibration control function: Vibration is suppressed by automatically setting a filter for the vibration frequency.

**AUTO** Autotuning: The motor is moved according to a command pattern automatically generated by the Servo Drive, then estimates the load inertia from the torque required at that time to automatically set the optimum

**FIT GAIN** Fit gain: The rigidity for the realtime autotuning for position control is set automatically. By repeatedly inputting a specific operation pattern, the optimum rigidity is set automatically.

**ABS** Absolute output: When the Controller power supply is turned ON, the Controller reads the Servo absolute position data to restore the absolute position.

**INC** Incremental output: When the Controller power supply is turned ON, operation is always started from the origin point.

**Adaptive filter** Adaptive filter: The machine load inertia is calculated in realtime and the result is used to automatically set the optimum gain.

**Torque limit** Torque limit: Switching is possible between the first torque limit and the second torque limit to limit the Servomotor output torque.

# a variety of functions and model variations



## Servomotor Variations

**G Series**

**Servomotors with General-purpose Inputs and MECHATROLINK-II* Compatible Servomotors**

R88M-G

| Servomotor capacity | Motor type | Cylinder type | | Cylinder type | Flat type |
|---|---|---|---|---|---|
| | Rated speed | 1000r/min | 2000r/min | 3000r/min | |
| | 50W | | | INC/ABS, INC | |
| | 100W | | | INC/ABS, INC | INC/ABS, INC |
| | 200W | | | INC/ABS, INC | INC/ABS, INC |
| | 400W | | | INC/ABS, INC | INC/ABS, INC |
| | 750W | | | INC/ABS, INC | |
| | 900W | INC/ABS | | | |
| | 1kW | | INC/ABS | INC/ABS | |
| | 1.5kW | | INC/ABS | INC/ABS | |
| | 2kW | INC/ABS | INC/ABS | INC/ABS | |
| | 3kW | INC/ABS | INC/ABS | INC/ABS | |
| | 4kW | | INC/ABS | INC/ABS | |
| | 4.5kW | INC/ABS | | | |
| | 5kW | | INC/ABS | INC/ABS | |
| | 6kW | INC/ABS | | | |
| | 7.5kW | | INC/ABS *4 | | |

*4. The rated speed is 1,500 r/min for 7.5 kW Servomotors only

## Functions

INC/ABS **Incremental/absolute output**: The Servomotor can be switched between an incremental output and an absolute output. When an absolute output is selected and the Controller power supply is turned ON, the Controller reads the Servo absolute position data to restore the absolute position.

INC **Incremental output**: When the Controller power supply is turned ON, operation is always started from the origin point.

*MECHATROLINK-II is a registered trademark of the MECHATROLINK Members Association

G-series AC Servomotors/Servo Drives with General-purpose Pulse-string or Analog Inputs

# R88M-G/R88D-GT

## Support for a Wide Range of Applications with Position Control, Speed Control, Torque Control.

- High-speed Response
  The G-series AC Servomotors and Servo Drives have achieved high-speed response capabilities, with a high-response frequency of 1 kHz.
- Suppressing Vibration of Low-rigidity Mechanisms during Acceleration/Deceleration
  The damping control function suppresses vibration of low-rigidity mechanisms or devices whose ends tend to vibrate. Two damping filters are provided to enable switching the vibration frequency automatically according to the direction of rotation and also via an external signal. In addition, the settings can be made easily merely by setting the vibration frequency and filter values, and you are assured of stable operation even if the settings are inappropriate.
- High-speed Positioning via Resonance Suppression Control
  The realtime autotuning function automatically estimates the load inertia of the machine in realtime and sets the optimal gain. The adaptive filter automatically suppresses vibration caused by resonance. Also, two independent notch filters make it possible to reduce vibration of a mechanism with multiple resonance frequencies.

## System Configuration

**Note:** CX-Drive (version 1.61) support for G-series Servo Drives can be obtained by using the CX-One V2 auto-update function from May 30, 2008.

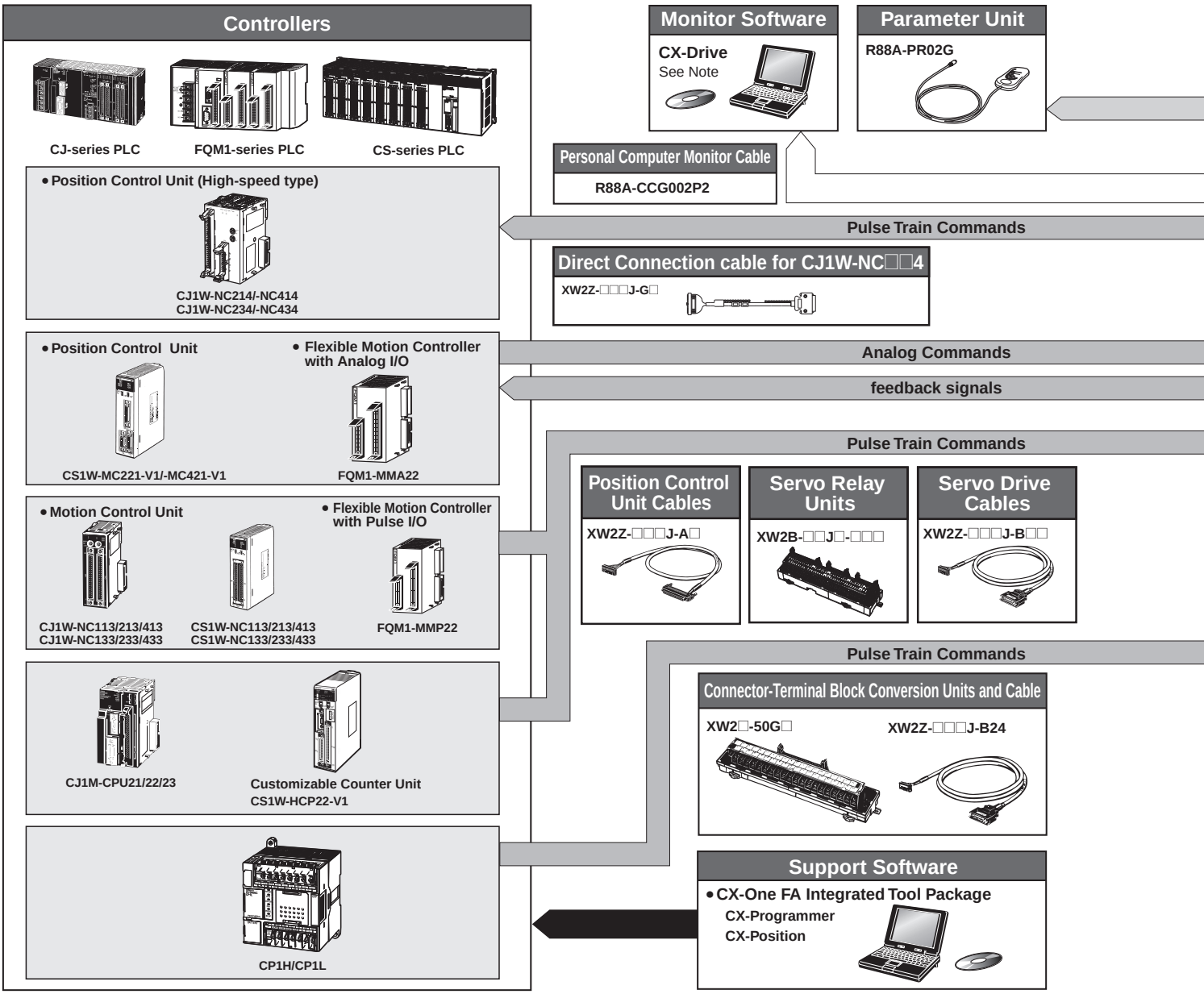

- Command Control Mode Switching
  Operation can be performed by switching between two of the following control modes: Position control, speed control (including internal speed) and torque control. Therefore, a variety of applications can be supported by one Servo Drive.
- Simplified Speed Control with Internal Speed Settings
  Eight internal speed settings allow you to change the speed easily by using external signals.

## AC Servo Drives

- **G-series**
  **AC Servo Drive**
  **R88D-GT**

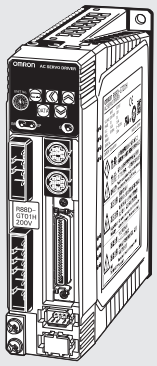

**Motor power signals**

## Power Cables

- **Standard Cables**
  **Without Brake**
  **R88A-CAG□□□□S**
  **With Brake**
  **R88A-CAG□□□□B**
- **Robot Cable**
  **Without Brakes**
  **R88A-CAG□□□□SR**
  **With Brake**
  **R88A-CAG□□□□BR**

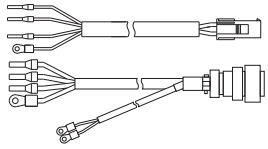

**feedback signals**

## Encoder Cables

- **Standard Cables**
  **50 W to 750 W**
  **R88A-CRG□□□□C**
  **900 W to 7.5 kW**
  **R88A-CRGC□□□N**
- **Robot Cables**
  **50 W to 750 W**
  **R88A-CRG□□□□CR**
  **900 W to 7.5 kW**
  **R88A-CRGC□□□NR**

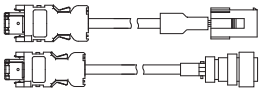

## AC Servomotors

- **Model without Decelerators**
  **R88M-G**

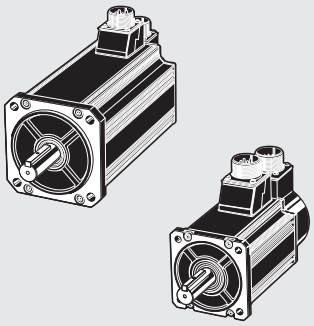

## Peripheral Devices

- **Reactors**
  **3G3AX-DL**
  **3G3AX-AL**
- **External Regeneration Resistors**
  **R88A-RR**

## Absolute Encoder Battery Cable

**R88A-CRGD0R3C (-BS)**

(One Battery is included with Servo Drivers with model numbers ending in "BS.")

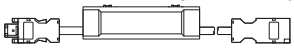

*Not required if a battery is connected to the control connector (CN1).

## Decelerators

- **Backlash: 3 Arcminutes Max.**
  **R88G-HPG**
  **Backlash: 15 Arcminutes Max.**
  **R88G-VRSF**

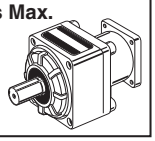

## Interpreting Model Numbers

### ● Servo Drive Model Numbers

The model number provides information such as the Servo Drive type, the applicable Servomotor capacity, and the power supply voltage.

**R88D-GT01H**

G-series Servo Drive

Drive Type
- T: Three-mode type

Applicable Servomotor Capacity
- A5: 50 W
- 01: 100 W
- 02: 200 W
- 04: 400 W
- 08: 750 W
- 10: 1 kW
- 15: 1.5 kW
- 20: 2 kW
- 30: 3 kW
- 50: 5 kW
- 75: 7.5 kW

Power Supply Voltage
- L: 100 VAC
- H: 200 VAC

### ● Servomotor Model Numbers

**R88M-GP10030H-BOS2**

G-series Servomotor

Motor Type
- Blank: Cylinder type
- P: Flat type

Servomotor Capacity
- 050: 50 W
- 100: 100 W
- 200: 200 W
- 400: 400 W
- 750: 750 W
- 900: 900 W
- 1K0: 1 kW
- 1K5: 1.5 kW
- 2K0: 2 kW
- 3K0: 3 kW
- 4K0: 4 kW
- 4K5: 4.5 kW
- 5K0: 5 kW
- 6K0: 6 kW
- 7K5: 7.5 kW

Rated Rotation Speed
- 10: 1,000 r/min
- 15: 1,500 r/min
- 20: 2,000 r/min
- 30: 3,000 r/min

Applied Voltage
- H: 200 VAC with incremental encoder specifications
- L: 100 VAC with incremental encoder specifications
- T: 200 VAC with absolute encoder specifications
- S: 100 VAC with absolute encoder specifications

Option
- Blank: Straight shaft
- B: With brake
- O: With oil seal
- S2: With key and tap

## ● Understanding Decelerator Model Numbers

**Backlash = 3' Max.**

R88G-HPG14A05100PBJ

Decelerator for
G-Series Servomotors
Backlash = 3' Max.

Flange Size Number
- 11A: □40
- 14A: □60
- 20A: □90
- 32A: □120
- 50A: □170
- 65A: □230

Gear Ratio
- 05: 1/5
- 09: 1/9 (only frame number 11A)
- 11: 1/11 (except frame number 65A)
- 12: 1/12 (only frame number 65A)
- 20: 1/20 (only frame number 65A)
- 21: 1/21 (except frame number 65A)
- 25: 1/25 (only frame number 65A)
- 33: 1/33
- 45: 1/45

Applicable Servomotor Capacity
- 050: 50 W
- 100: 100 W
- 200: 200 W
- 400: 400 W
- 750: 750 W
- 900: 900 W
- 1K0: 1 kW
- 1K5: 1.5 kW
- 2K0: 2 kW
- 3K0: 3 kW
- 4K0: 4 kW
- 4K5: 4.5 kW
- 5K0: 5 kW
- 6K0: 6 kW
- 7K5: 7 kW

Motor Type
- Blank: 3,000-r/min cylindrical servomotors
- P: flat servomotors
- S: 2,000-r/min servomotors
- T: 1,000-r/min servomotors

Backlash
- B: 3' max.

Option
- Blank: Straight shaft
- J: With key and tap

**Backlash = 15' Max.**

R88G-VRSF09B100PCJ

Decelerator for
G-Series Servomotors
Backlash = 15' Max.

Gear Ratio
- 05: 1/5
- 09: 1/9
- 15: 1/15
- 25: 1/25

Flange Size Number
- B: □52
- C: □78
- D: □98

Applicable Servomotor Capacity
- 050: 50 W
- 100: 100 W
- 200: 200 W
- 400: 400 W
- 750: 750 W

Motor Type
- Blank: 3,000-r/min cylindrical servomotors
- P: flat servomotors

Backlash
- C: 15' max.

Option
- J: With key and tap

# Ordering Information

## ● Servo Drives

| Specifications | | Model |
|---|---|---|
| Single-phase 100 VAC | 50 W | **R88D-GTA5L** |
| | 100 W | **R88D-GT01L** |
| | 200 W | **R88D-GT02L** |
| | 400 W | **R88D-GT04L** |
| Single-phase 200 VAC | 50 W | **R88D-GT01H** |
| | 100 W | |
| | 200 W | **R88D-GT02H** |
| | 400 W | **R88D-GT04H** |
| Single-phase/three-phase 200 VAC | 750 W | **R88D-GT08H** |
| | 1 kW | **R88D-GT10H** |
| | 900 W | **R88D-GT15H** |
| | 1 kW | |
| | 1.5 kW | |
| Three-phase 200 VAC | 2 kW | **R88D-GT20H** |
| | 2 kW | **R88D-GT30H** |
| | 3 kW | |
| | 3 kW | **R88D-GT50H** |
| | 4 kW | |
| | 4.5 kW | |
| | 5 kW | |
| | 6 kW | **R88D-GT75H** |
| | 7.5 kW | |

## ● Servomotors

### INC 3,000-r/min Cylindrical Servomotors

| Specifications | | | Model | |
|---|---|---|---|---|
| | | | Straight shaft | Straight shaft with key and tap |
| Without brake | 100 V | 50 W | **R88M-G05030H** | **R88M-G05030H-S2** |
| | | 100 W | **R88M-G10030L** | **R88M-G10030L-S2** |
| | | 200 W | **R88M-G20030L** | **R88M-G20030L-S2** |
| | | 400 W | **R88M-G40030L** | **R88M-G40030L-S2** |
| | 200 V | 50 W | **R88M-G05030H** | **R88M-G05030H-S2** |
| | | 100 W | **R88M-G10030H** | **R88M-G10030H-S2** |
| | | 200 W | **R88M-G20030H** | **R88M-G20030H-S2** |
| | | 400 W | **R88M-G40030H** | **R88M-G40030H-S2** |
| | | 750 W | **R88M-G75030H** | **R88M-G75030H-S2** |
| With brake | 100 V | 50 W | **R88M-G05030H-B** | **R88M-G05030H-BS2** |
| | | 100 W | **R88M-G10030L-B** | **R88M-G10030L-BS2** |
| | | 200 W | **R88M-G20030L-B** | **R88M-G20030L-BS2** |
| | | 400 W | **R88M-G40030L-B** | **R88M-G40030L-BS2** |
| | 200 V | 50 W | **R88M-G05030H-B** | **R88M-G05030H-BS2** |
| | | 100 W | **R88M-G10030H-B** | **R88M-G10030H-BS2** |
| | | 200 W | **R88M-G20030H-B** | **R88M-G20030H-BS2** |
| | | 400 W | **R88M-G40030H-B** | **R88M-G40030H-BS2** |
| | | 750 W | **R88M-G75030H-B** | **R88M-G75030H-BS2** |

**Note:** Models with oil seals are also available.

## ABS/INC 3,000-r/min Cylindrical Servomotors

| Specifications | | | Model | |
|---|---|---|---|---|
| | | | Straight shaft | Straight shaft with key and tap |
| Without brake | 100 V | 50 W | R88M-G05030T | R88M-G05030T-S2 |
| | | 100 W | R88M-G10030S | R88M-G10030S-S2 |
| | | 200 W | R88M-G20030S | R88M-G20030S-S2 |
| | 200 V | 400 W | R88M-G40030S | R88M-G40030S-S2 |
| | | 50 W | R88M-G05030T | R88M-G05030T-S2 |
| | | 100 W | R88M-G10030T | R88M-G10030T-S2 |
| | | 200 W | R88M-G20030T | R88M-G20030T-S2 |
| | | 400 W | R88M-G40030T | R88M-G40030T-S2 |
| | | 750 W | R88M-G75030T | R88M-G75030T-S2 |
| | | 1 kW | R88M-G1K030T | R88M-G1K030T-S2 |
| | | 1.5 kW | R88M-G1K530T | R88M-G1K530T-S2 |
| | | 2 kW | R88M-G2K030T | R88M-G2K030T-S2 |
| | | 3 kW | R88M-G3K030T | R88M-G3K030T-S2 |
| | | 4 kW | R88M-G4K030T | R88M-G4K030T-S2 |
| | | 5 kW | R88M-G5K030T | R88M-G5K030T-S2 |
| With brake | 100 V | 50 W | R88M-G05030T-B | R88M-G05030T-BS2 |
| | | 100 W | R88M-G10030S-B | R88M-G10030S-BS2 |
| | | 200 W | R88M-G20030S-B | R88M-G20030S-BS2 |
| | | 400 W | R88M-G40030S-B | R88M-G40030S-BS2 |
| | 200 V | 50 W | R88M-G05030T-B | R88M-G05030T-BS2 |
| | | 100 W | R88M-G10030T-B | R88M-G10030T-BS2 |
| | | 200 W | R88M-G20030T-B | R88M-G20030T-BS2 |
| | | 400 W | R88M-G40030T-B | R88M-G40030T-BS2 |
| | | 750 W | R88M-G75030T-B | R88M-G75030T-BS2 |
| | | 1 kW | R88M-G1K030T-B | R88M-G1K030T-BS2 |
| | | 1.5 kW | R88M-G1K530T-B | R88M-G1K530T-BS2 |
| | | 2 kW | R88M-G2K030T-B | R88M-G2K030T-BS2 |
| | | 3 kW | R88M-G3K030T-B | R88M-G3K030T-BS2 |
| | | 4 kW | R88M-G4K030T-B | R88M-G4K030T-BS2 |
| | | 5 kW | R88M-G5K030T-B | R88M-G5K030T-BS2 |

**Note:** Models with oil seals are also available.

## INC 3,000-r/min Flat Servomotors

| Specifications | | | Model | |
|---|---|---|---|---|
| | | | Straight shaft | Straight shaft with key and tap |
| Without brake | 100 V | 100 W | R88M-GP10030L | R88M-GP10030L-S2 |
| | | 200 W | R88M-GP20030L | R88M-GP20030L-S2 |
| | | 400 W | R88M-GP40030L | R88M-GP40030L-S2 |
| | 200 V | 100 W | R88M-GP10030H | R88M-GP10030H-S2 |
| | | 200 W | R88M-GP20030H | R88M-GP20030H-S2 |
| | | 400 W | R88M-GP40030H | R88M-GP40030H-S2 |
| With brake | 100 V | 100 W | R88M-GP10030L-B | R88M-GP10030L-BS2 |
| | | 200 W | R88M-GP20030L-B | R88M-GP20030L-BS2 |
| | | 400 W | R88M-GP40030L-B | R88M-GP40030L-BS2 |
| | 200 V | 100 W | R88M-GP10030H-B | R88M-GP10030H-BS2 |
| | | 200 W | R88M-GP20030H-B | R88M-GP20030H-BS2 |
| | | 400 W | R88M-GP40030H-B | R88M-GP40030H-BS2 |

**Note:** Models with oil seals are also available.

## ABS/INC 3,000-r/min Flat Servomotors

| Specifications | | | Model | |
|---|---|---|---|---|
| | | | Straight shaft | Straight shaft with key and tap |
| Without brake | 100 V | 100 W | R88M-GP10030S | R88M-GP10030S-S2 |
| | | 200 W | R88M-GP20030S | R88M-GP20030S-S2 |
| | | 400 W | R88M-GP40030S | R88M-GP40030S-S2 |
| | 200 V | 100 W | R88M-GP10030T | R88M-GP10030T-S2 |
| | | 200 W | R88M-GP20030T | R88M-GP20030T-S2 |
| | | 400 W | R88M-GP40030T | R88M-GP40030T-S2 |
| With brake | 100 V | 100 W | R88M-GP10030S-B | R88M-GP10030S-BS2 |
| | | 200 W | R88M-GP20030S-B | R88M-GP20030S-BS2 |
| | | 400 W | R88M-GP40030S-B | R88M-GP40030S-BS2 |
| | 200 V | 100 W | R88M-GP10030T-B | R88M-GP10030T-BS2 |
| | | 200 W | R88M-GP20030T-B | R88M-GP20030T-BS2 |
| | | 400 W | R88M-GP40030T-B | R88M-GP40030T-BS2 |

**Note:** Models with oil seals are also available.

## ABS/INC 2,000-r/min Cylindrical Servomotors

| Specifications | | | Model | |
|---|---|---|---|---|
| | | | Straight shaft | Straight shaft with key and tap |
| Without brake | 200 V | 1 kW | R88M-G1K020T | R88M-G1K020T-S2 |
| | | 1.5 kW | R88M-G1K520T | R88M-G1K520T-S2 |
| | | 2 kW | R88M-G2K020T | R88M-G2K020T-S2 |
| | | 3 kW | R88M-G3K020T | R88M-G3K020T-S2 |
| | | 4 kW | R88M-G4K020T | R88M-G4K020T-S2 |
| | | 5 kW | R88M-G5K020T | R88M-G5K020T-S2 |
| | | 7.5 kW | R88M-G7K515T | R88M-G7K515T-S2 |
| With brake | 200 V | 1 kW | R88M-G1K020T-B | R88M-G1K020T-BS2 |
| | | 1.5 kW | R88M-G1K520T-B | R88M-G1K520T-BS2 |
| | | 2 kW | R88M-G2K020T-B | R88M-G2K020T-BS2 |
| | | 3 kW | R88M-G3K020T-B | R88M-G3K020T-BS2 |
| | | 4 kW | R88M-G4K020T-B | R88M-G4K020T-BS2 |
| | | 5 kW | R88M-G5K020T-B | R88M-G5K020T-BS2 |
| | | 7.5 kW | R88M-G7K515T-B | R88M-G7K515T-BS2 |

**Note: 1.** Models with oil seals are also available.
**Note: 2.** The rated rotation speed for 7.5-kW Servomotors is 1,500 r/min.

## ABS/INC 1,000-r/min Cylindrical Servomotors

| Specifications | | | Model | |
|---|---|---|---|---|
| | | | Straight shaft | Straight shaft with key and tap |
| Without brake | 200 V | 900 W | R88M-G90010T | R88M-G90010T-S2 |
| | | 2 kW | R88M-G2K010T | R88M-G2K010T-S2 |
| | | 3 kW | R88M-G3K010T | R88M-G3K010T-S2 |
| | | 4.5 kW | R88M-G4K510T | R88M-G4K510T-S2 |
| | | 6 kW | R88M-G6K010T | R88M-G6K010T-S2 |
| With brake | 200 V | 900 W | R88M-G90010T-B | R88M-G90010T-BS2 |
| | | 2 kW | R88M-G2K010T-B | R88M-G2K010T-BS2 |
| | | 3 kW | R88M-G3K010T-B | R88M-G3K010T-BS2 |
| | | 4.5 kW | R88M-G4K510T-B | R88M-G4K510T-BS2 |
| | | 6 kW | R88M-G6K010T-B | R88M-G6K010T-BS2 |

**Note:** Models with oil seals are also available.

## ● Decelerators

### Backlash: 3 Arcminutes Max.

### Decelerators for 3,000-r/min Cylindrical Servomotors

### Straight shaft

| Specifications | | Model |
|---|---|---|
| Motor capacity | Gear ratio | |
| 50 W | 1/5 | R88G-HPG11A05100B |
| | 1/9 | R88G-HPG11A09050B |
| | 1/21 | R88G-HPG14A21100B |
| | 1/33 | R88G-HPG14A33050B |
| | 1/45 | R88G-HPG14A45050B |
| 100 W | 1/5 | R88G-HPG11A05100B |
| | 1/11 | R88G-HPG14A11100B |
| | 1/21 | R88G-HPG14A21100B |
| | 1/33 | R88G-HPG20A33100B |
| | 1/45 | R88G-HPG20A45100B |
| 200 W | 1/5 | R88G-HPG14A05200B |
| | 1/11 | R88G-HPG14A11200B |
| | 1/21 | R88G-HPG20A21200B |
| | 1/33 | R88G-HPG20A33200B |
| | 1/45 | R88G-HPG20A45200B |
| 400 W | 1/5 | R88G-HPG14A05400B |
| | 1/11 | R88G-HPG20A11400B |
| | 1/21 | R88G-HPG20A21400B |
| | 1/33 | R88G-HPG32A33400B |
| | 1/45 | R88G-HPG32A45400B |
| 750 W | 1/5 | R88G-HPG20A05750B |
| | 1/11 | R88G-HPG20A11750B |
| | 1/21 | R88G-HPG32A21750B |
| | 1/33 | R88G-HPG32A33750B |
| | 1/45 | R88G-HPG32A45750B |
| 1 kW | 1/5 | R88G-HPG32A051K0B |
| | 1/11 | R88G-HPG32A111K0B |
| | 1/21 | R88G-HPG32A211K0B |
| | 1/33 | R88G-HPG32A331K0B |
| | 1/45 | R88G-HPG50A451K0B |
| 1.5 kW | 1/5 | R88G-HPG32A052K0B |
| | 1/11 | R88G-HPG32A112K0B |
| | 1/21 | R88G-HPG32A211K5B |
| | 1/33 | R88G-HPG50A332K0B |
| | 1/45 | R88G-HPG50A451K5B |
| 2 kW | 1/5 | R88G-HPG32A052K0B |
| | 1/11 | R88G-HPG32A112K0B |
| | 1/21 | R88G-HPG50A212K0B |
| | 1/33 | R88G-HPG50A332K0B |
| 3 kW | 1/5 | R88G-HPG32A053K0B |
| | 1/11 | R88G-HPG50A113K0B |
| | 1/21 | R88G-HPG50A213K0B |
| 4 kW | 1/5 | R88G-HPG32A054K0B |
| | 1/11 | R88G-HPG50A115K0B |
| 5 kW | 1/5 | R88G-HPG50A055K0B |
| | 1/11 | R88G-HPG50A115K0B |

**Note: 1.** The standard models have a straight shaft.
**Note: 2.** To order a Servomotor with a straight shaft with key, add "J" to the end of the model number, in the place indicated by the box.
Example: R88G-HPG11B05100BJ

### Backlash: 3 Arcminutes Max.

### Decelerators for 3,000-r/min Flat Servomotors

### Straight shaft

| Specifications | | Model |
|---|---|---|
| Motor capacity | Gear ratio | |
| 100 W | 1/5 | R88G-HPG11A05100PB |
| | 1/11 | R88G-HPG14A11100PB |
| | 1/21 | R88G-HPG14A21100PB |
| | 1/33 | R88G-HPG20A33100PB |
| | 1/45 | R88G-HPG20A45100PB |
| 200 W | 1/5 | R88G-HPG14A05200PB |
| | 1/11 | R88G-HPG20A11200PB |
| | 1/21 | R88G-HPG20A21200PB |
| | 1/33 | R88G-HPG20A33200PB |
| | 1/45 | R88G-HPG20A45200PB |
| 400 W | 1/5 | R88G-HPG20A05400PB |
| | 1/11 | R88G-HPG20A11400PB |
| | 1/21 | R88G-HPG20A21400PB |
| | 1/33 | R88G-HPG32A33400PB |
| | 1/45 | R88G-HPG32A45400PB |

**Note: 1.** The standard models have a straight shaft.
**Note: 2.** To order a Servomotor with a straight shaft with key, add "J" to the end of the model number.

### Backlash: 3 Arcminutes Max.
### Decelerators for 2,000-r/min Cylindrical Servomotors
### Straight shaft

| Specifications | | Model |
|---|---|---|
| Motor capacity | Gear ratio | |
| 1 kW | 1/5 | R88G-HPG32A053K0B |
| | 1/11 | R88G-HPG32A112K0SB |
| | 1/21 | R88G-HPG32A211K0SB |
| | 1/33 | R88G-HPG50A332K0SB |
| | 1/45 | R88G-HPG50A451K0SB |
| 1.5 kW | 1/5 | R88G-HPG32A053K0B |
| | 1/11 | R88G-HPG32A112K0SB |
| | 1/21 | R88G-HPG50A213K0B |
| | 1/33 | R88G-HPG50A332K0SB |
| 2 kW | 1/5 | R88G-HPG32A053K0B |
| | 1/11 | R88G-HPG32A112K0SB |
| | 1/21 | R88G-HPG50A213K0B |
| | 1/33 | R88G-HPG50A332K0SB |
| 3 kW | 1/5 | R88G-HPG32A054K0B |
| | 1/11 | R88G-HPG50A115K0B |
| | 1/21 | R88G-HPG50A213K0SB |
| | 1/25 | R88G-HPG65A253K0SB |
| 4 kW | 1/5 | R88G-HPG50A054K0SB |
| | 1/11 | R88G-HPG50A114K0SB |
| | 1/20 | R88G-HPG65A204K0SB |
| | 1/25 | R88G-HPG65A254K0SB |
| 5 kW | 1/5 | R88G-HPG50A055K0SB |
| | 1/11 | R88G-HPG50A115K0SB |
| | 1/20 | R88G-HPG65A205K0SB |
| | 1/25 | R88G-HPG65A255K0SB |
| 7.5 kW | 1/5 | R88G-HPG65A057K5SB |
| | 1/12 | R88G-HPG65A127K5SB |

**Note: 1.** The standard models have a straight shaft.
**Note: 2.** To order a Servomotor with a straight shaft with key, add “J” to the end of the model number.

### Backlash: 3 Arcminutes Max.
### Decelerators for 1,000-r/min Cylindrical Servomotors
### Straight shaft

| Specifications | | Model |
|---|---|---|
| Motor capacity | Gear ratio | |
| 900 W | 1/5 | R88G-HPG32A05900TB |
| | 1/11 | R88G-HPG32A11900TB |
| | 1/21 | R88G-HPG50A21900TB |
| | 1/33 | R88G-HPG50A33900TB |
| 2 kW | 1/5 | R88G-HPG32A052K0TB |
| | 1/11 | R88G-HPG50A112K0TB |
| | 1/21 | R88G-HPG50A212K0TB |
| | 1/25 | R88G-HPG65A255K0SB |
| 3 kW | 1/5 | R88G-HPG50A055K0SB |
| | 1/11 | R88G-HPG50A115K0SB |
| | 1/20 | R88G-HPG65A205K0SB |
| | 1/25 | R88G-HPG65A255K0SB |
| 4.5 kW | 1/5 | R88G-HPG50A054K5TB |
| | 1/12 | R88G-HPG65A127K5SB |
| | 1/20 | R88G-HPG65A204K5TB |
| 6 kW | 1/5 | R88G-HPG65A057K5SB |
| | 1/12 | R88G-HPG65A127K5SB |

**Note: 1.** The standard models have a straight shaft.
**Note: 2.** Models with a key and tap are indicated with "J" at the end of the model number.

### Backlash: 15 Arcminutes Max.
### Decelerators for 3,000-r/min Cylindrical Servomotors
### Straight shaft with key and tap

| Specifications | | Model |
|---|---|---|
| Motor capacity | Gear ratio | |
| 50 W | 1/5 | R88G-VRSF05B100CJ |
| | 1/9 | R88G-VRSF09B100CJ |
| | 1/15 | R88G-VRSF15B100CJ |
| | 1/25 | R88G-VRSF25B100CJ |
| 100 W | 1/5 | R88G-VRSF05B100CJ |
| | 1/9 | R88G-VRSF09B100CJ |
| | 1/15 | R88G-VRSF15B100CJ |
| | 1/25 | R88G-VRSF25B100CJ |
| 200 W | 1/5 | R88G-VRSF05B200CJ |
| | 1/9 | R88G-VRSF09C200CJ |
| | 1/15 | R88G-VRSF15C200CJ |
| | 1/25 | R88G-VRSF25C200CJ |
| 400 W | 1/5 | R88G-VRSF05C400CJ |
| | 1/9 | R88G-VRSF09C400CJ |
| | 1/15 | R88G-VRSF15C400CJ |
| | 1/25 | R88G-VRSF25C400CJ |
| 750 W | 1/5 | R88G-VRSF05C750CJ |
| | 1/9 | R88G-VRSF09D750CJ |
| | 1/15 | R88G-VRSF15D750CJ |
| | 1/25 | R88G-VRSF25D750CJ |

### Backlash: 15 Arcminutes Max.
### Decelerators for 3,000-r/min Flat Servomotors
### Straight shaft with key and tap

| Specifications | | Model |
|---|---|---|
| Motor capacity | Gear ratio | |
| 100 W | 1/5 | R88G-VRSF05B100PCJ |
| | 1/9 | R88G-VRSF09B100PCJ |
| | 1/15 | R88G-VRSF15B100PCJ |
| | 1/25 | R88G-VRSF25B100PCJ |
| 200 W | 1/5 | R88G-VRSF05B200PCJ |
| | 1/9 | R88G-VRSF09C200PCJ |
| | 1/15 | R88G-VRSF15C200PCJ |
| | 1/25 | R88G-VRSF25C200PCJ |
| 400 W | 1/5 | R88G-VRSF05C400PCJ |
| | 1/9 | R88G-VRSF09C400PCJ |
| | 1/15 | R88G-VRSF15C400PCJ |
| | 1/25 | R88G-VRSF25C400PCJ |

## Accessories and Cables

### • Servomotor Power Cables (Standard Cables)

**For Servomotor without brake**

| Specifications | | Model |
|---|---|---|
| 3,000-r/min Servomotors of 50 to 750 W, 3,000-r/min Flat Servomotors of 100 to 400 W | 3 m | R88A-CAGA003S |
| | 5 m | R88A-CAGA005S |
| | 10 m | R88A-CAGA010S |
| | 15 m | R88A-CAGA015S |
| | 20 m | R88A-CAGA020S |
| | 30 m | R88A-CAGA030S |
| | 40 m | R88A-CAGA040S |
| | 50 m | R88A-CAGA050S |
| 3,000-r/min Servomotors of 1 to 1.5 kW, 2,000-r/min Servomotors of 1 to 1.5 kW, 1,000-r/min Servomotors of 900 W | 3 m | R88A-CAGB003S |
| | 5 m | R88A-CAGB005S |
| | 10 m | R88A-CAGB010S |
| | 15 m | R88A-CAGB015S |
| | 20 m | R88A-CAGB020S |
| | 30 m | R88A-CAGB030S |
| | 40 m | R88A-CAGB040S |
| | 50 m | R88A-CAGB050S |
| 3,000-r/min Servomotors of 2 kW, 2,000-r/min Servomotors of 2 kW | 3 m | R88A-CAGC003S |
| | 5 m | R88A-CAGC005S |
| | 10 m | R88A-CAGC010S |
| | 15 m | R88A-CAGC015S |
| | 20 m | R88A-CAGC020S |
| | 30 m | R88A-CAGC030S |
| | 40 m | R88A-CAGC040S |
| | 50 m | R88A-CAGC050S |
| 3,000-r/min Servomotors of 3 to 5 kW, 2,000-r/min Servomotors of 3 to 5 kW, 1,000-r/min Servomotors of 2 to 4.5 kW | 3 m | R88A-CAGD003S |
| | 5 m | R88A-CAGD005S |
| | 10 m | R88A-CAGD010S |
| | 15 m | R88A-CAGD015S |
| | 20 m | R88A-CAGD020S |
| | 30 m | R88A-CAGD030S |
| | 40 m | R88A-CAGD040S |
| | 50 m | R88A-CAGD050S |
| 1,500-r/min Servomotors of 7.5 kW, 1,000-r/min Servomotors of 6 kW | 3 m | R88A-CAGE003S |
| | 5 m | R88A-CAGE005S |
| | 10 m | R88A-CAGE010S |
| | 15 m | R88A-CAGE015S |
| | 20 m | R88A-CAGE020S |
| | 30 m | R88A-CAGE030S |
| | 40 m | R88A-CAGE040S |
| | 50 m | R88A-CAGE050S |

**Note:** There are separate connectors for power and brakes for 3,000-r/min Servomotors of 50 to 750 W, Flat Servomotors, and Servomotors of 6 kW or higher. When a Servomotor with a brake is used, it is necessary to use both a Power Cable for Servomotors without brakes and a Brake Cable.

### • Servomotor Power Cables (Standard Cables)

**For Servomotor with brake**

| Specifications | | Model |
|---|---|---|
| 3,000-r/min Servomotors of 1 to 1.5 kW, 2,000-r/min Servomotors of 1 to 1.5 kW, 1,000-r/min Servomotors of 900 W | 3 m | R88A-CAGB003B |
| | 5 m | R88A-CAGB005B |
| | 10 m | R88A-CAGB010B |
| | 15 m | R88A-CAGB015B |
| | 20 m | R88A-CAGB020B |
| | 30 m | R88A-CAGB030B |
| | 40 m | R88A-CAGB040B |
| | 50 m | R88A-CAGB050B |
| 3,000-r/min Servomotors of 2 kW, 2,000-r/min Servomotors of 2 kW | 3 m | R88A-CAGC003B |
| | 5 m | R88A-CAGC005B |
| | 10 m | R88A-CAGC010B |
| | 15 m | R88A-CAGC015B |
| | 20 m | R88A-CAGC020B |
| | 30 m | R88A-CAGC030B |
| | 40 m | R88A-CAGC040B |
| | 50 m | R88A-CAGC050B |
| 3,000-r/min Servomotors of 3 to 5 kW, 2,000-r/min Servomotors of 3 to 5 kW, 1,000-r/min Servomotors of 2 to 4.5 kW | 3 m | R88A-CAGD003B |
| | 5 m | R88A-CAGD005B |
| | 10 m | R88A-CAGD010B |
| | 15 m | R88A-CAGD015B |
| | 20 m | R88A-CAGD020B |
| | 30 m | R88A-CAGD030B |
| | 40 m | R88A-CAGD040B |
| | 50 m | R88A-CAGD050B |

### • Brake Cables (Standard Cables)

| Specifications | | Model |
|---|---|---|
| 3,000-r/min Servomotors of 50 to 750 W, 3,000-r/min Flat Servomotors of 100 to 400 W | 3 m | R88A-CAGA003B |
| | 5 m | R88A-CAGA005B |
| | 10 m | R88A-CAGA010B |
| | 15 m | R88A-CAGA015B |
| | 20 m | R88A-CAGA020B |
| | 30 m | R88A-CAGA030B |
| | 40 m | R88A-CAGA040B |
| | 50 m | R88A-CAGA050B |
| 1,500-r/min Servomotors of 7.5 kW, 1,000-r/min Servomotors of 6 kW | 3 m | R88A-CAGE003B |
| | 5 m | R88A-CAGE005B |
| | 10 m | R88A-CAGE010B |
| | 15 m | R88A-CAGE015B |
| | 20 m | R88A-CAGE020B |
| | 30 m | R88A-CAGE030B |
| | 40 m | R88A-CAGE040B |
| | 50 m | R88A-CAGE050B |

### • Encoder Cables (Standard Cables)

| Specifications | | Model |
|---|---|---|
| 3,000-r/min Servomotors of 50 to 750 W with an absolute encoder, 3,000-r/min Flat Servomotors of 100 to 400 W with an absolute encoder | 3 m | **R88A-CRGA003C** |
| | 5 m | **R88A-CRGA005C** |
| | 10 m | **R88A-CRGA010C** |
| | 15 m | **R88A-CRGA015C** |
| | 20 m | **R88A-CRGA020C** |
| | 30 m | **R88A-CRGA030C** |
| | 40 m | **R88A-CRGA040C** |
| | 50 m | **R88A-CRGA050C** |
| 3,000-r/min Servomotors of 50 to 750 W with an incremental encoder, 3,000-r/min Flat Servomotors of 100 to 400 W with an incremental encoder | 3 m | **R88A-CRGB003C** |
| | 5 m | **R88A-CRGB005C** |
| | 10 m | **R88A-CRGB010C** |
| | 15 m | **R88A-CRGB015C** |
| | 20 m | **R88A-CRGB020C** |
| | 30 m | **R88A-CRGB030C** |
| | 40 m | **R88A-CRGB040C** |
| | 50 m | **R88A-CRGB050C** |
| 3,000-r/min Servomotors of 1 to 5 kW, 2,000-r/min Servomotors of 1 to 5 kW, 1,500-r/min Servomotors of 7.5 kW, 1,000-r/min Servomotors of 900 W to 6 kW | 3 m | **R88A-CRGC003N** |
| | 5 m | **R88A-CRGC005N** |
| | 10 m | **R88A-CRGC010N** |
| | 15 m | **R88A-CRGC015N** |
| | 20 m | **R88A-CRGC020N** |
| | 30 m | **R88A-CRGC030N** |
| | 40 m | **R88A-CRGC040N** |
| | 50 m | **R88A-CRGC050N** |

### • Absolute Encoder Battery Cable

| Specifications | | Model |
|---|---|---|
| Absolute Encoder Battery Cable (Battery not included.) | 0.3 m | **R88A-CRGD0R3C** |
| Absolute Encoder Battery Cable (One R88A-BAT01G Battery included.) | 0.3 m | **R88A-CRGD0R3C-BS** |

### • Absolute Encoder Backup Battery

| Specifications | Model |
|---|---|
| 2,000 mA·h 3.6 V | **R88A-BAT01G** |

### • Servomotor Power Cables (Robot Cables)

**For Servomotor without brake**

| Specifications | | Model |
|---|---|---|
| 3,000-r/min Servomotors of 50 to 750 W, 3,000-r/min Flat Servomotors of 100 to 400 W | 3 m | **R88A-CAGA003SR** |
| | 5 m | **R88A-CAGA005SR** |
| | 10 m | **R88A-CAGA010SR** |
| | 15 m | **R88A-CAGA015SR** |
| | 20 m | **R88A-CAGA020SR** |
| | 30 m | **R88A-CAGA030SR** |
| | 40 m | **R88A-CAGA040SR** |
| | 50 m | **R88A-CAGA050SR** |
| 3,000-r/min Servomotors of 1 to 1.5 kW, 2,000-r/min Servomotors of 1 to 1.5 kW, 1,000-r/min Servomotors of 900 W | 3 m | **R88A-CAGB003SR** |
| | 5 m | **R88A-CAGB005SR** |
| | 10 m | **R88A-CAGB010SR** |
| | 15 m | **R88A-CAGB015SR** |
| | 20 m | **R88A-CAGB020SR** |
| | 30 m | **R88A-CAGB030SR** |
| | 40 m | **R88A-CAGB040SR** |
| | 50 m | **R88A-CAGB050SR** |
| 3,000-r/min Servomotors of 2 kW, 2,000-r/min Servomotors of 2 kW | 3 m | **R88A-CAGC003SR** |
| | 5 m | **R88A-CAGC005SR** |
| | 10 m | **R88A-CAGC010SR** |
| | 15 m | **R88A-CAGC015SR** |
| | 20 m | **R88A-CAGC020SR** |
| | 30 m | **R88A-CAGC030SR** |
| | 40 m | **R88A-CAGC040SR** |
| | 50 m | **R88A-CAGC050SR** |
| 3,000-r/min Servomotors of 3 to 5 kW, 2,000-r/min Servomotors of 3 to 5 kW, 1,000-r/min Servomotors of 2 to 4.5 kW | 3 m | **R88A-CAGD003SR** |
| | 5 m | **R88A-CAGD005SR** |
| | 10 m | **R88A-CAGD010SR** |
| | 15 m | **R88A-CAGD015SR** |
| | 20 m | **R88A-CAGD020SR** |
| | 30 m | **R88A-CAGD030SR** |
| | 40 m | **R88A-CAGD040SR** |
| | 50 m | **R88A-CAGD050SR** |

### • Servomotor Power Cables (Robot Cables)

**For Servomotor with brake**

| Specifications | | Model |
|---|---|---|
| 3,000-r/min Servomotors of 1 to 1.5 kW, 2,000-r/min Servomotors of 1 to 1.5 kW, 1,000-r/min Servomotors of 900 W | 3 m | **R88A-CAGB003BR** |
| | 5 m | **R88A-CAGB005BR** |
| | 10 m | **R88A-CAGB010BR** |
| | 15 m | **R88A-CAGB015BR** |
| | 20 m | **R88A-CAGB020BR** |
| | 30 m | **R88A-CAGB030BR** |
| | 40 m | **R88A-CAGB040BR** |
| | 50 m | **R88A-CAGB050BR** |
| 3,000-r/min Servomotors of 2 kW, 2,000-r/min Servomotors of 2 kW | 3 m | **R88A-CAGC003BR** |
| | 5 m | **R88A-CAGC005BR** |
| | 10 m | **R88A-CAGC010BR** |
| | 15 m | **R88A-CAGC015BR** |
| | 20 m | **R88A-CAGC020BR** |
| | 30 m | **R88A-CAGC030BR** |
| | 40 m | **R88A-CAGC040BR** |
| | 50 m | **R88A-CAGC050BR** |
| 3,000-r/min Servomotors of 3 to 5 kW, 2,000-r/min Servomotors of 3 to 5 kW, 1,000-r/min Servomotors of 2 to 4.5 kW | 3 m | **R88A-CAGD003BR** |
| | 5 m | **R88A-CAGD005BR** |
| | 10 m | **R88A-CAGD010BR** |
| | 15 m | **R88A-CAGD015BR** |
| | 20 m | **R88A-CAGD020BR** |
| | 30 m | **R88A-CAGD030BR** |
| | 40 m | **R88A-CAGD040BR** |
| | 50 m | **R88A-CAGD050BR** |

### • Brake Cables (Robot Cables)

| Specifications | | Model |
|---|---|---|
| 3,000-r/min Servomotors of 50 to 750 W, 3,000-r/min Flat Servomotors of 100 to 400 W | 3 m | **R88A-CAGA003BR** |
| | 5 m | **R88A-CAGA005BR** |
| | 10 m | **R88A-CAGA010BR** |
| | 15 m | **R88A-CAGA015BR** |
| | 20 m | **R88A-CAGA020BR** |
| | 30 m | **R88A-CAGA030BR** |
| | 40 m | **R88A-CAGA040BR** |
| | 50 m | **R88A-CAGA050BR** |

### • Encoder Cables (Robot Cables)

| Specifications | | Model |
|---|---|---|
| 3,000-r/min Servomotors of 50 to 750 W with an absolute encoder, 3,000-r/min Flat Servomotors of 100 to 400 W with an absolute encoder | 3 m | **R88A-CRGA003CR** |
| | 5 m | **R88A-CRGA005CR** |
| | 10 m | **R88A-CRGA010CR** |
| | 15 m | **R88A-CRGA015CR** |
| | 20 m | **R88A-CRGA020CR** |
| | 30 m | **R88A-CRGA030CR** |
| | 40 m | **R88A-CRGA040CR** |
| | 50 m | **R88A-CRGA050CR** |
| 3,000-r/min Servomotors of 50 to 750 W with an incremental encoder, 3,000-r/min Flat Servomotors of 100 to 400 W with an incremental encoder | 3 m | **R88A-CRGB003CR** |
| | 5 m | **R88A-CRGB005CR** |
| | 10 m | **R88A-CRGB010CR** |
| | 15 m | **R88A-CRGB015CR** |
| | 20 m | **R88A-CRGB020CR** |
| | 30 m | **R88A-CRGB030CR** |
| | 40 m | **R88A-CRGB040CR** |
| | 50 m | **R88A-CRGB050CR** |
| 3,000-r/min Servomotors of 1 to 5 kW, 2,000-r/min Servomotors of 1 to 5 kW, 1,500-r/min Servomotors of 7.5 kW, 1,000-r/min Servomotors of 900 W to 6 kW | 3 m | **R88A-CRGC003NR** |
| | 5 m | **R88A-CRGC005NR** |
| | 10 m | **R88A-CRGC010NR** |
| | 15 m | **R88A-CRGC015NR** |
| | 20 m | **R88A-CRGC020NR** |
| | 30 m | **R88A-CRGC030NR** |
| | 40 m | **R88A-CRGC040NR** |
| | 50 m | **R88A-CRGC050NR** |

### • Communications Cables

| Specifications | | Model |
|---|---|---|
| Personal Computer Monitor Cable RS-232 Communications | 2 m | **R88A-CCG002P2** |
| RS-485 Communications Cable | 0.5 m | **R88A-CCG0R5P4** |
| | 1 m | **R88A-CCG001P4** |

### • Connectors

| Specifications | | Model |
|---|---|---|
| Servomotor Connector for Encoder Cable | Absolute Encoder | **R88A-CNG01R** |
| | Incremental Encoder | **R88A-CNG02R** |
| Control I/O Connector (CN1) | | **R88A-CNU01C** |
| Encoder Connector (CN2) | | **R88A-CNW01R** |
| Power Cable Connector (750 W max.) | | **R88A-CNG01A** |
| Brake Cable Connector (750 W max.) | | **R88A-CNG01B** |

### • Servo Relay Units (for CN1)

| Specifications | Model |
|---|---|
| For CS1W-NC113/-NC133<br>For CJ1W-NC113/-NC133<br>For C200HW-NC113 | **XW2B-20J6-1B** |
| For CS1W-NC213/-NC413/-NC233/-NC433<br>For CJ1W-NC213/-NC413/-NC233/-NC433<br>For C200HW-NC213/-NC413 | **XW2B-40J6-2B** |
| For CJ1M-CPU21/-CPU22/-CPU23 (for 1 axis) | **XW2B-20J6-8A** |
| For CJ1M-CPU21/-CPU22/-CPU23 (for 2 axis) | **XW2B-40J6-9A** |
| For FQM1-MMA22<br>For FQM1-MMP22 | **XW2B-80J7-12A** |

## • Servo Relay Unit Cables (for Servo Drives)

| Specifications | | Model |
|---|---|---|
| For CJ1M-CPU21/-CPU22/-CPU23 (XW2B-20J6-8A/XW2B-40J6-9A) | 1 m | **XW2Z-100J-B31** |
| | 2 m | **XW2Z-200J-B31** |
| For FQM1-MMA22 (XW2B-80J7-12A) | 1 m | **XW2Z-100J-B27** |
| | 2 m | **XW2Z-200J-B27** |
| For FQM1-MMP22 (XW2B-80J7-12A) | 1 m | **XW2Z-100J-B26** |
| | 2 m | **XW2Z-200J-B26** |

**Note:** You cannot use a Servo Relay Unit Cable for line-receiver inputs (+CWLD: CN1 pin 44, -CWLD: CN1 pin 45, +CCWLD: CN1 pin 46, -CCWLD: CN1 pin 47).
Use a General-purpose Control Cable and wire the connector to match the controller.

## • Servo Relay Unit Cables (for Position Control Units)

| Specifications | | | Model |
|---|---|---|---|
| For CS1W-NC113, C200HW-NC113 (XW2B-20J6-1B) | | 0.5 m | **XW2Z-050J-A6** |
| | | 1 m | **XW2Z-100J-A6** |
| For CS1W-NC213/-NC413, C200HW-NC213/-NC413 (XW2B-20J6-2B) | | 0.5 m | **XW2Z-050J-A7** |
| | | 1 m | **XW2Z-100J-A7** |
| For CS1W-NC133 (XW2B-20J6-1B) | | 0.5 m | **XW2Z-050J-A10** |
| | | 1 m | **XW2Z-100J-A10** |
| For CS1W-NC233/-NC433 (XW2B-20J6-2B) | | 0.5 m | **XW2Z-050J-A11** |
| | | 1 m | **XW2Z-100J-A11** |
| For CJ1W-NC113 (XW2B-20J6-1B) | | 0.5 m | **XW2Z-050J-A14** |
| | | 1 m | **XW2Z-100J-A14** |
| For CJ1W-NC213/-NC413 (XW2B-20J6-2B) | | 0.5 m | **XW2Z-050J-A15** |
| | | 1 m | **XW2Z-100J-A15** |
| For CJ1W-NC133 (XW2B-20J6-1B) | | 0.5 m | **XW2Z-050J-A18** |
| | | 1 m | **XW2Z-100J-A18** |
| For CJ1W-NC233/-NC433 (XW2B-20J6-2B) | | 0.5 m | **XW2Z-050J-A19** |
| | | 1 m | **XW2Z-100J-A19** |
| For CJ1M-CPU21/-CPU22/-CPU23 (XW2B-20J6-8A/XW2B-40J6-9A) | | 0.5 m | **XW2Z-050J-A33** |
| | | 1 m | **XW2Z-100J-A33** |
| For FQM1-MMA22 (XW2B-80J7-12A) | General-purpose I/O | 0.5 m | **XW2Z-050J-A28** |
| | | 1 m | **XW2Z-100J-A28** |
| | | 2 m | **XW2Z-200J-A28** |
| | Special I/O | 0.5 m | **XW2Z-050J-A31** |
| | | 1 m | **XW2Z-100J-A31** |
| | | 2 m | **XW2Z-200J-A31** |
| For FQM1-MMP22 (XW2B-80J7-12A) | General-purpose I/O | 0.5 m | **XW2Z-050J-A28** |
| | | 1 m | **XW2Z-100J-A28** |
| | | 2 m | **XW2Z-200J-A28** |
| | Special I/O | 0.5 m | **XW2Z-050J-A30** |
| | | 1 m | **XW2Z-100J-A30** |
| | | 2 m | **XW2Z-200J-A30** |

## • Control Cables

| Specifications | | Model |
|---|---|---|
| Motion Control Unit Cables for 1 axis CS1W-MC221-V1/-MC421-V1 | 1 m | **R88A-CPG001M1** |
| | 2 m | **R88A-CPG002M1** |
| | 3 m | **R88A-CPG003M1** |
| | 5 m | **R88A-CPG005M1** |
| Motion Control Unit Cables for 2 axes CS1W-MC221-V1/-MC421-V1 | 1 m | **R88A-CPG001M2** |
| | 2 m | **R88A-CPG002M2** |
| | 3 m | **R88A-CPG003M2** |
| | 5 m | **R88A-CPG005M2** |
| General-purpose Control Cables with Connector on One End | 1 m | **R88A-CPG001S** |
| | 2 m | **R88A-CPG002S** |
| Connector-Terminal Block Cables | 1 m | **XW2Z-100J-B24** |
| | 2 m | **XW2Z-200J-B24** |
| Connector Terminal Block Conversion Unit | M3 screw type | **XW2B-50G4** |
| | M3.5 screw type | **XW2B-50G5** |
| | M3 screw type | **XW2D-50G6** |

## • External Regeneration Resistors

| Specifications | Model |
|---|---|
| 20 W, 50 Ω | **R88A-RR08050S** |
| 20 W, 100 Ω | **R88A-RR080100S** |
| 70 W, 47 Ω | **R88A-RR22047S** |
| 500 W, 20 Ω | **R88A-RR50020S** |

## • Reactors

| Specifications | Model |
|---|---|
| R88D-GTA5L/-GT01H | **3G3AX-DL2002** |
| R88D-GT01L/-GT02H | **3G3AX-DL2004** |
| R88D-GT02L/-GT04H | **3G3AX-DL2007** |
| R88D-GT04L/-GT08H/-GT10H | **3G3AX-DL2015** |
| R88D-GT15H | **3G3AX-DL2022** |
| R88D-GT08H/-GT10H/-GT15H | **3G3AX-AL2025** |
| R88D-GT20H/-GT30H | **3G3AX-AL2055** |
| R88D-GT50H | **3G3AX-AL2110** |
| R88D-GT75H | **3G3AX-AL2220** |

## • Mounting Brackets (L Brackets for Rack Mounting)

| Specifications | Model |
|---|---|
| R88D-GTA5L/-GT01L/-GT01H/-GT02H | **R88A-TK01G** |
| R88D-GT02L/-GT04H | **R88A-TK02G** |
| R88D-GT04L/-GT08H | **R88A-TK03G** |
| R88D-GT10H/-GT15H | **R88A-TK04G** |

## • Parameter Unit

| Specifications | Model |
|---|---|
| Parameter Unit | **R88A-PR02G** |

## Servo Drive-Servomotor Combinations

Only the Servomotor and Servo Drive combinations listed here can be used. Do not use other combinations.

### ● 3,000-r/min Sylindrical Servomotors and Servo Drives

| Voltage | Servo Drive | Servomotor | | |
|---|---|---|---|---|
| | | Rated output | With incremental encoder | With absolute encoder |
| 100 V | R88D-GTA5L | 50 W | R88M-G05030H-□ | R88M-G05030T-□ |
| | R88D-GT01L | 100 W | R88M-G10030L-□ | R88M-G10030S-□ |
| | R88D-GT02L | 200 W | R88M-G20030L-□ | R88M-G20030S-□ |
| | R88D-GT04L | 400 W | R88M-G40030L-□ | R88M-G40030S-□ |
| Single-phase 200 V | R88D-GT01H | 50 W | R88M-G05030H-□ | R88M-G05030T-□ |
| | R88D-GT01H | 100 W | R88M-G10030H-□ | R88M-G10030T-□ |
| | R88D-GT02H | 200 W | R88M-G20030H-□ | R88M-G20030T-□ |
| | R88D-GT04H | 400 W | R88M-G40030H-□ | R88M-G40030T-□ |
| Single-phase/ three-phase 200 V | R88D-GT08H | 750 W | R88M-G75030H-□ | R88M-G75030T-□ |
| | R88D-GT15H | 1 kW | – | R88M-G1K030T-□ |
| | R88D-GT15H | 1.5 kW | – | R88M-G1K530T-□ |
| Three-phase 200 V | R88D-GT20H | 2 kW | – | R88M-G2K030T-□ |
| | R88D-GT30H | 3 kW | – | R88M-G3K030T-□ |
| | R88D-GT50H | 4 kW | – | R88M-G4K030T-□ |
| | R88D-GT50H | 5 kW | – | R88M-G5K030T-□ |

### ● 3,000-r/min Flat Servomotors and Servo Drives

| Voltage | Servo Drive | Servomotor | | |
|---|---|---|---|---|
| | | Rated output | With incremental encoder | With absolute encoder |
| 100 V | R88D-GT01L | 100 W | R88M-GP10030L-□ | R88M-GP10030S-□ |
| | R88D-GT02L | 200 W | R88M-GP20030L-□ | R88M-GP20030S-□ |
| | R88D-GT04L | 400 W | R88M-GP40030L-□ | R88M-GP40030S-□ |
| Single-phase 200 V | R88D-GT01H | 100 W | R88M-GP10030H-□ | R88M-GP10030T-□ |
| | R88D-GT02H | 200 W | R88M-GP20030H-□ | R88M-GP20030T-□ |
| | R88D-GT04H | 400 W | R88M-GP40030H-□ | R88M-GP40030T-□ |

### ● 2,000-r/min Sylindrical Servomotors and Servo Drives

| Voltage | Servo Drive | Servomotor | |
|---|---|---|---|
| | | Rated output | With absolute encoder |
| Single-phase/ three-phase 200 V | R88D-GT10H | 1 kW | R88M-G1K020T-□ |
| | R88D-GT15H | 1.5 kW | R88M-G1K520T-□ |
| Three-phase 200 V | R88D-GT20H | 2 kW | R88M-G2K020T-□ |
| | R88D-GT30H | 3 kW | R88M-G3K020T-□ |
| | R88D-GT50H | 4 kW | R88M-G4K020T-□ |
| | R88D-GT50H | 5 kW | R88M-G5K020T-□ |
| | R88D-GT75H | 7.5 kW | R88M-G7K515T-□ |

### ● 1,000-r/min Sylindrical Servomotors and Servo Drives

| Voltage | Servo Drive | Servomotor | |
|---|---|---|---|
| | | Rated output | With absolute encoder |
| Single-phase/ three-phase 200 V | R88D-GT15H | 900 W | R88M-G90010T-□ |
| Three-phase 200 V | R88D-GT30H | 2 kW | R88M-G2K010T-□ |
| | R88D-GT50H | 3 kW | R88M-G3K010T-□ |
| | R88D-GT50H | 4.5 kW | R88M-G4K510T-□ |
| | R88D-GT75H | 6 kW | R88M-G6K010T-□ |

## Servomotor and Decelerator Combinations

### ● 3,000-r/min Cylindrical Servomotors

| Motor model | 1/5 | 1/11 (1/9 for flange size No.11) | 1/21 | 1/33 | 1/45 |
|---|---|---|---|---|---|
| R88M-G05030□ | R88G-HPG11A05100B□ (Also used with R88M-G10030□) | R88G-HPG11A09050B□ (Gear ratio 1/9) | R88G-HPG14A21100B□ (Also used with R88M-G10030□) | R88G-HPG14A33050B□ | R88G-HPG14A45050B□ |
| R88M-G10030□ | R88G-HPG11A05100B□ | R88G-HPG14A11100B□ | R88G-HPG14A21100B□ | R88G-HPG20A33100B□ | R88G-HPG20A45100B□ |
| R88M-G20030□ | R88G-HPG14A05200B□ | R88G-HPG14A11200B□ | R88G-HPG20A21200B□ | R88G-HPG20A33200B□ | R88G-HPG20A45200B□ |
| R88M-G40030□ | R88G-HPG14A05400B□ | R88G-HPG20A11400B□ | R88G-HPG20A21400B□ | R88G-HPG32A33400B□ | R88G-HPG32A45400B□ |
| R88M-G75030□ | R88G-HPG20A05750B□ | R88G-HPG20A11750B□ | R88G-HPG32A21750B□ | R88G-HPG32A33750B□ | R88G-HPG32A45750B□ |
| R88M-G1K030T | R88G-HPG32A051K0B□ | R88G-HPG32A111K0B□ | R88G-HPG32A211K0B□ | R88G-HPG32A331K0B□ | R88G-HPG50A451K0B□ |
| R88M-G1K530T | R88G-HPG32A052K0B□ (Also used with R88M-G2K030T) | R88G-HPG32A112K0B□ (Also used with R88M-G2K030T) | R88G-HPG32A211K5B□ | R88G-HPG50A332K0B□ (Also used with R88M-G2K030T) | R88G-HPG50A451K5B□ |
| R88M-G2K030T | R88G-HPG32A052K0B□ | R88G-HPG32A112K0B□ | R88G-HPG50A212K0B□ | R88G-HPG50A332K0B□ | – |
| R88M-G3K030T | R88G-HPG32A053K0B□ | R88G-HPG50A113K0B□ | R88G-HPG50A213K0B□ | – | – |
| R88M-G4K030T | R88G-HPG32A054K0B□ | R88G-HPG50A115K0B□ (Also used with R88M-G5K030T) | – | – | – |
| R88M-G5K030T | R88G-HPG50A055K0B□ | R88G-HPG50A115K0B□ | – | – | – |

### ● 3,000-r/min Flat Servomotors

| Motor model | 1/5 | 1/11 | 1/21 | 1/33 | 1/45 |
|---|---|---|---|---|---|
| R88M-GP10030□ | R88G-HPG11A05100PB□ | R88G-HPG14A11100PB□ | R88G-HPG14A21100PB□ | R88G-HPG20A33100PB□ | R88G-HPG20A45100PB□ |
| R88M-GP20030□ | R88G-HPG14A05200PB□ | R88G-HPG20A11200PB□ | R88G-HPG20A21200PB□ | R88G-HPG20A33200PB□ | R88G-HPG20A45200PB□ |
| R88M-GP40030□ | R88G-HPG20A05400PB□ | R88G-HPG20A11400PB□ | R88G-HPG20A21400PB□ | R88G-HPG32A33400PB□ | R88G-HPG32A45400PB□ |

### ● 2,000-r/min Cylindrical Servomotors

| Motor model | 1/5 | 1/11 (1/12 for flange size No.65) | 1/21 (1/20 for flange size No.65) | 1/33 (1/25 for flange size No.65) | 1/45 |
|---|---|---|---|---|---|
| R88M-G1K020T | R88G-HPG32A053K0B□ (Also used with R88M-G3K030T) | R88G-HPG32A112K0SB□ (Also used with R88M-G2K020T) | R88G-HPG32A211K0SB□ | R88G-HPG50A332K0SB□ (Also used with R88M-G2K020T) | R88G-HPG50A451K0SB□ |
| R88M-G1K520T | R88G-HPG32A053K0B□ (Also used with R88M-G3K030T) | R88G-HPG32A112K0SB□ (Also used with R88M-G2K020T) | R88G-HPG50A213K0B□ (Also used with R88M-G3K030T) | R88G-HPG50A332K0SB□ (Also used with R88M-G2K020T) | – |
| R88M-G2K020T | R88G-HPG32A053K0B□ (Also used with R88M-G3K030T) | R88G-HPG32A112K0SB□ | R88G-HPG50A213K0B□ (Also used with R88M-G3K030T) | R88G-HPG50A332K0SB□ | – |
| R88M-G3K020T | R88G-HPG32A054K0B□ (Also used with R88M-G4K030T) | R88G-HPG50A115K0B□ (Also used with R88M-G5K030T) | R88G-HPG50A213K0SB□ | R88G-HPG65A253K0SB□ | – |
| R88M-G4K020T | R88G-HPG50A054K0SB□ | R88G-HPG50A114K0SB□ | R88G-HPG65A204K0SB□ | R88G-HPG65A254K0SB□ | – |
| R88M-G5K020T | R88G-HPG50A055K0SB□ | R88G-HPG50A115K0SB□ | R88G-HPG65A205K0SB□ | R88G-HPG65A255K0SB□ | – |
| R88M-G7K515T | R88G-HPG65A057K5SB□ | R88G-HPG65A127K5SB□ | – | – | – |

### ● 1,000-r/min Cylindrical Servomotors

| Motor model | 1/5 | 1/11 (1/12 for flange size No.65) | 1/21 (1/20 for flange size No.65) | 1/33 (1/25 for flange size No.65) |
|---|---|---|---|---|
| R88M-G90010T | R88G-HPG32A05900TB□ | R88G-HPG32A11900TB□ | R88G-HPG50A21900TB□ | R88G-HPG50A33900TB□ |
| R88M-G2K010T | R88G-HPG32A052K0TB□ | R88G-HPG50A112K0TB□ | R88G-HPG50A212K0TB□ | R88G-HPG65A255K0SB□ (Also used with R88M-G5K020T) |
| R88M-G3K010T | R88G-HPG50A055K0SB□ (Also used with R88M-G5K020T) | R88G-HPG50A115K0SB□ (Also used with R88M-G5K020T) | R88G-HPG65A205K0SB□ (Also used with R88M-G5K020T) | R88G-HPG65A255K0SB□ (Also used with R88M-G5K020T) |
| R88M-G4K510T | R88G-HPG50A054K5TB□ | R88G-HPG65A127K5SB□ (Also used with R88M-G7K515T) | R88G-HPG65A204K5TB□ | – |
| R88M-G6K010T | R88G-HPG65A057K5SB□ (Also used with R88M-G7K515T) | R88G-HPG65A127K5SB□ (Also used with R88M-G7K515T) | – | – |

# Servo Relay Units and Cables

## ● Servo Relay Units and Cables

Select the Servo Relay Unit and Cable according to the model number of the Position Control Unit being used.

| Position Control Unit | Position Control Unit Cable | | Servo Relay Unit | Servo Drive Cable |
|---|---|---|---|---|
| CS1W-NC113 | XW2Z-□□□J-A6 | | XW2B-20J6-1B | XW2Z-□□□J-B25 |
| C200HW-NC113 | | | | |
| CS1W-NC213 | XW2Z-□□□J-A7 | | XW2B-40J6-2B | |
| CS1W-NC413 | | | | |
| C200HW-NC213 | | | | |
| C200HW-NC413 | | | | |
| CS1W-NC133 | XW2Z-□□□J-A10 | | XW2B-20J6-1B | |
| CS1W-NC233 | XW2Z-□□□J-A11 | | XW2B-40J6-2B | |
| CS1W-NC433 | | | | |
| CJ1W-NC113 | XW2Z-□□□J-A14 | | XW2B-20J6-1B | |
| CJ1W-NC213 | XW2Z-□□□J-A15 | | XW2B-40J6-2B | |
| CJ1W-NC413 | | | | |
| CJ1W-NC133 | XW2Z-□□□J-A18 | | XW2B-20J6-1B | |
| CJ1W-NC233 | XW2Z-□□□J-A19 | | W2B-40J6-2B | |
| CJ1W-NC433 | | | | |
| CJ1M-CPU21 | XW2Z-□□□J-A33 | | XW2B-20J6-8A (for 1 axes) | XW2Z-□□□J-B31 |
| CJ1M-CPU22 | | | | |
| CJ1M-CPU23 | | | XW2B-40J6-9A (for 2 axes) | |
| FQM1-MMP22 | General-purpose I/O | XW2Z-□□□J-A28 | XW2B-80J7-12A | XW2Z-□□□J-B26 |
| | Special I/O | XW2Z-□□□J-A30 | | |
| FQM1-MMA22 | General-purpose I/O | XW2Z-□□□J-A28 | | XW2Z-□□□J-B27 |
| | Special I/O | XW2Z-□□□J-A31 | | |

**Note: 1.** Insert the cable length into the boxes in the model number (□□□). Position Control Unit cables come in two lengths: 0.5 m and 1 m (some are also available in lengths of 2 m). Servo Driver Cables also come in two lengths: 1 m and 2 m.
**Note: 2.** Two Servo Driver Cables are required if 2-axis control is performed using one Position Control Unit.
**Note: 3.** Direct cable is available for CJ1W-NC□□4 Position Control Unit (High-Speed type).

| Specifications | The number of axes | Model |
|---|---|---|
| For CJ1W-NC214/-NC414 (open collector output type) | 1 axis | XW2Z-□□□J-G13 |
| For CJ1W-NC214/-NC414 (open collector output type) | 2 axis | XW2Z-□□□J-G5 |
| For CJ1W-NC234/-NC434 (line-driver output type) | 1 axis | XW2Z-□□□J-G9 |
| For CJ1W-NC234/-NC434 (line-driver output type) | 2 axis | XW2Z-□□□J-G1 |

# Motion Control Unit Cables

## ● Motion Control Unit Cable

There are special cables for 1-axis and 2-axis Motion Control Unit operation. Select the appropriate cable for the number of axes to be connected.

| Motion Control Unit | Cable | | Remarks |
|---|---|---|---|
| CS1W-MC221-V1/421-V1 | For 1 axis | R88A-CPG□□□M1 | The □□□ digits in the model number indicate the cable length.<br>Motion Control Unit Cables come in four lengths: 1 m, 2 m, 3 m, and 5 m.<br>Example model number for 2-m 1-axis cable: R88A-CPG002M1 |
| | For 2 axes | R88A-CPG□□□M2 | |

## Cable Combinations

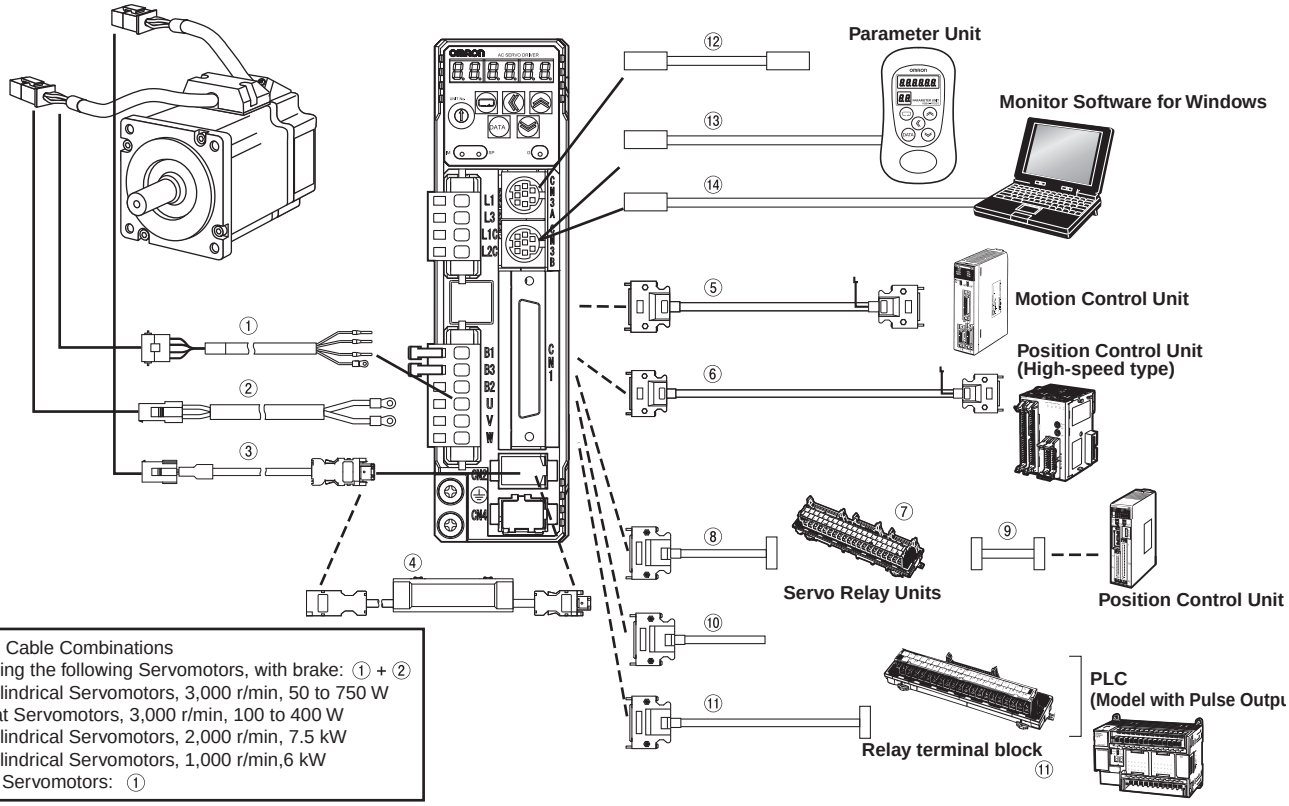


* Brake Cable Combinations
Using the following Servomotors, with brake: ① + ②
Cylindrical Servomotors, 3,000 r/min, 50 to 750 W
Flat Servomotors, 3,000 r/min, 100 to 400 W
Cylindrical Servomotors, 2,000 r/min, 7.5 kW
Cylindrical Servomotors, 1,000 r/min,6 kW
Other Servomotors: ①

### ● Power Supply Cables (for CNB) (SR Connection Cables)

| Symbol | Name | Connected to | Model | Description |
|---|---|---|---|---|
| ① | Standard Servomotor Power Cables for Servomotors without Brakes | Cylindrical Servomotors, 3,000 r/min, 50 to 750 W<br>Flat Servomotors, 3,000 r/min, 100 to 400 W | R88A-CAGA□□□S<br>The empty boxes in the model number are for the cable length. The cable can be 3, 5, 10, 15, 20, 30, 40, or 50 m long. | 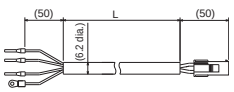 <br>**[Servomotor Connector]**<br>Connector:<br>172159-1 (Tyco Electronics AMP KK)<br>Connector pins:<br>170362-1 (Tyco Electronics AMP KK)<br>170366-1 (Tyco Electronics AMP KK) |
| | | Cylindrical Servomotors, 3,000 r/min, 1 to 1.5 kW<br>Cylindrical Servomotors, 2,000 r/min, 1 to 1.5 kW<br>Cylindrical Servomotors, 1,000 r/min, 900 W | R88A-CAGB□□□S<br>The empty boxes in the model number are for the cable length. The cable can be 3, 5, 10, 15, 20, 30, 40, or 50 m long. | 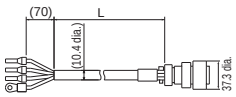 <br>**[Servomotor Connector]**<br>Straight plug:<br>N/MS3106B20-4S<br>(Japan Aviation Electronics Industry, Ltd.)<br>Cable clamp:<br>N/MS3057-12A<br>(Japan Aviation Electronics Industry, Ltd.) |
| | | Cylindrical Servomotors, 3,000 r/min, 2 kW<br>Cylindrical Servomotors, 2,000 r/min, 2 kW | R88A-CAGC□□□S<br>The empty boxes in the model number are for the cable length. The cable can be 3, 5, 10, 15, 20, 30, 40, or 50 m long. | 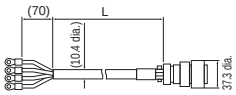 <br>**[Servomotor Connector]**<br>Straight plug:<br>N/MS3106B20-4S<br>(Japan Aviation Electronics Industry, Ltd.)<br>Cable clamp:<br>N/MS3057-12A<br>(Japan Aviation Electronics Industry, Ltd.) |
| | | Cylindrical Servomotors, 3,000 r/min, 3 to 5 kW<br>Cylindrical Servomotors, 2,000 r/min, 3 to 5 kW<br>Cylindrical Servomotors, 1,000 r/min, 2 to 4.5 kW | R88A-CAGD□□□S<br>The empty boxes in the model number are for the cable length. The cable can be 3, 5, 10, 15, 20, 30, 40, or 50 m long. | 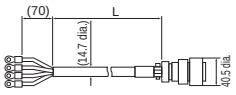 <br>**[Servomotor Connector]**<br>Straight plug:<br>N/MS3106B22-22S<br>(Japan Aviation Electronics Industry, Ltd.)<br>Cable clamp:<br>N/MS3057-12A<br>(Japan Aviation Electronics Industry, Ltd.) |
| | | Cylindrical Servomotors, 1,500 r/min, 7.5 kW<br>Cylindrical Servomotors, 1,000 r/min, 6 kW | R88A-CAGE□□□S<br>The empty boxes in the model number are for the cable length. The cable can be 3, 5, 10, 15, 20, 30, 40, or 50 m long. | 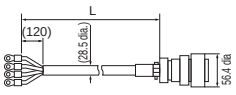 <br>**[Servomotor Connector]**<br>Straight plug:<br>N/MS3106B32-17S<br>(Japan Aviation Electronics Industry, Ltd.)<br>Cable clamp:<br>N/MS3057-20A<br>(Japan Aviation Electronics Industry, Ltd.) |

| Symbol | Name | Connected to | Model | Description |
|---|---|---|---|---|
| ① | Standard Servomotor Power Cables for Servomotors with Brakes | Cylindrical Servomotors, 3,000 r/min, 1 to 1.5 kW<br>Cylindrical Servomotors, 2,000 r/min, 1 to 1.5 kW<br>Cylindrical Servomotors, 1,000 r/min, 900 W | R88A-CAGB□□□B<br>The empty boxes in the model number are for the cable length. The cable can be 3, 5, 10, 15, 20, 30, 40, or 50 m long. | 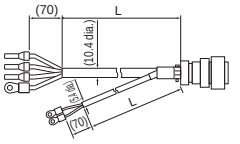 <br>**[Servomotor Connector]**<br>Straight plug:<br>N/MS3106B20-18S<br>(Japan Aviation Electronics Industry, Ltd.)<br>Cable clamp:<br>N/MS3057-12A<br>(Japan Aviation Electronics Industry, Ltd.) |
| | | Cylindrical Servomotors, 3,000 r/min, 2 kW<br>Cylindrical Servomotors, 2,000 r/min, 2 kW | R88A-CAGC□□□B<br>The empty boxes in the model number are for the cable length. The cable can be 3, 5, 10, 15, 20, 30, 40, or 50 m long. | 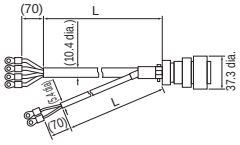 <br>**[Servomotor Connector]**<br>Straight plug:<br>N/MS3106B20-18S<br>(Japan Aviation Electronics Industry, Ltd.)<br>Cable clamp:<br>N/MS3057-12A<br>(Japan Aviation Electronics Industry, Ltd.) |
| | | Cylindrical Servomotors, 3,000 r/min, 3 to 5 kW<br>Cylindrical Servomotors, 2,000 r/min, 3 to 5 kW<br>Cylindrical Servomotors, 1,000 r/min, 2 to 4.5 kW | R88A-CAGD□□□B<br>The empty boxes in the model number are for the cable length. The cable can be 3, 5, 10, 15, 20, 30, 40, or 50 m long. | 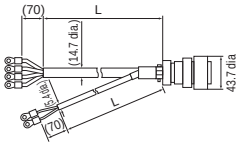 <br>**[Servomotor Connector]**<br>Straight plug:<br>N/MS3106B24-11S<br>(Japan Aviation Electronics Industry, Ltd.)<br>Cable clamp:<br>N/MS3057-16A<br>(Japan Aviation Electronics Industry, Ltd.) |
| | Robot Servomotor Power Cables for Servomotors without Brakes | Cylindrical Servomotors, 3,000 r/min, 50 to 750 W<br>Flat Servomotors, 3,000 r/min, 100 to 400 W | R88A-CAGA□□□SR<br>The empty boxes in the model number are for the cable length. The cable can be 3, 5, 10, 15, 20, 30, 40, or 50 m long. | 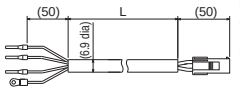 <br>**[Servomotor Connector]**<br>Connector:<br>172159-1 (Tyco Electronics AMP KK)<br>Connector pins:<br>170362-1 (Tyco Electronics AMP KK)<br>170366-1 (Tyco Electronics AMP KK) |
| | | Cylindrical Servomotors, 3,000 r/min, 1 to 1.5 kW<br>Cylindrical Servomotors, 2,000 r/min, 1 to 1.5 kW<br>Cylindrical Servomotors, 1,000 r/min, 900 W | R88A-CAGB□□□SR<br>The empty boxes in the model number are for the cable length. The cable can be 3, 5, 10, 15, 20, 30, 40, or 50 m long. | 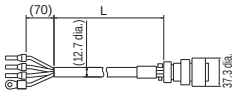 <br>**[Servomotor Connector]**<br>Straight plug:<br>N/MS3106B20-4S<br>(Japan Aviation Electronics Industry, Ltd.)<br>Cable clamp:<br>N/MS3057-12A<br>(Japan Aviation Electronics Industry, Ltd.) |
| | | Cylindrical Servomotors, 3,000 r/min, 2 kW<br>Cylindrical Servomotors, 2,000 r/min, 2 kW | R88A-CAGC□□□SR<br>The empty boxes in the model number are for the cable length. The cable can be 3, 5, 10, 15, 20, 30, 40, or 50 m long. | 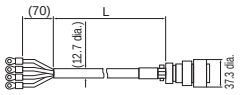 <br>**[Servomotor Connector]**<br>Straight plug:<br>N/MS3106B20-4S<br>(Japan Aviation Electronics Industry, Ltd.)<br>Cable clamp:<br>N/MS3057-12A<br>(Japan Aviation Electronics Industry, Ltd.) |
| | | Cylindrical Servomotors, 3,000 r/min, 3 to 5 kW<br>Cylindrical Servomotors, 2,000 r/min, 3 to 5 kW<br>Cylindrical Servomotors, 1,000 r/min, 2 to 4.5 kW | R88A-CAGD□□□SR<br>The empty boxes in the model number are for the cable length. The cable can be 3, 5, 10, 15, 20, 30, 40, or 50 m long. | 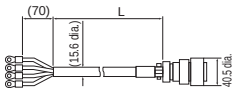 <br>**[Servomotor Connector]**<br>Straight plug:<br>N/MS3106B22-22S<br>(Japan Aviation Electronics Industry, Ltd.)<br>Cable clamp:<br>N/MS3057-12A<br>(Japan Aviation Electronics Industry, Ltd.) |
| | Robot Servomotor Power Cables for Servomotors with Brakes | Cylindrical Servomotors, 3,000 r/min, 1 to 1.5 kW<br>Cylindrical Servomotors, 2,000 r/min, 1 to 1.5 kW<br>Cylindrical Servomotors, 1,000 r/min, 900 W | R88A-CAGB□□□BR<br>The empty boxes in the model number are for the cable length. The cable can be 3, 5, 10, 15, 20, 30, 40, or 50 m long. | 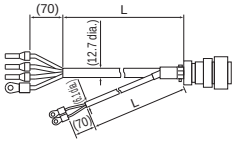 <br>**[Servomotor Connector]**<br>Straight plug:<br>N/MS3106B20-18S<br>(Japan Aviation Electronics Industry, Ltd.)<br>Cable clamp:<br>N/MS3057-12A<br>(Japan Aviation Electronics Industry, Ltd.) |
| | | Cylindrical Servomotors, 3,000 r/min, 2 kW<br>Cylindrical Servomotors, 2,000 r/min, 2 kW | R88A-CAGC□□□BR<br>The empty boxes in the model number are for the cable length. The cable can be 3, 5, 10, 15, 20, 30, 40, or 50 m long. | 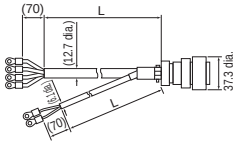 <br>**[Servomotor Connector]**<br>Straight plug:<br>N/MS3106B20-18S<br>(Japan Aviation Electronics Industry, Ltd.)<br>Cable clamp:<br>N/MS3057-12A<br>(Japan Aviation Electronics Industry, Ltd.) |
| | | Cylindrical Servomotors, 3,000 r/min, 3 to 5 kW<br>Cylindrical Servomotors, 2,000 r/min, 3 to 5 kW<br>Cylindrical Servomotors, 1,000 r/min, 2 to 4.5 kW | R88A-CAGD□□□BR<br>The empty boxes in the model number are for the cable length. The cable can be 3, 5, 10, 15, 20, 30, 40, or 50 m long. | 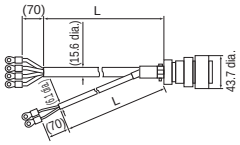 <br>**[Servomotor Connector]**<br>Straight plug:<br>N/MS3106B24-11S<br>(Japan Aviation Electronics Industry, Ltd.)<br>Cable clamp:<br>N/MS3057-16A<br>(Japan Aviation Electronics Industry, Ltd.) |

## ● Brake Cables

| Symbol | Name | Connected to | Model | Description |
|---|---|---|---|---|
| ② | Standard Brake Cables | Cylindrical Servomotors, 3,000 r/min, 50 to 750 W<br>Flat Servomotors, 3,000 r/min, 100 to 400 W | R88A-CAGA□□□B<br>The empty boxes in the model number are for the cable length. The cable can be 3, 5, 10, 15, 20, 30, 40, or 50 m long. | 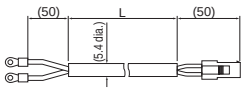 <br>**[Servomotor Connector]**<br>Connector:<br>172157-1 (Tyco Electronics AMP KK)<br>Connector pins:<br>170362-1 (Tyco Electronics AMP KK)<br>170366-1 (Tyco Electronics AMP KK) |
| | | Cylindrical Servomotors, 1,500 r/min, 7.5 kW<br>Cylindrical Servomotors, 1,000 r/min, 6 kW | R88A-CAGE□□□B<br>The empty boxes in the model number are for the cable length. The cable can be 3, 5, 10, 15, 20, 30, 40, or 50 m long. | 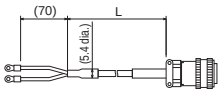 <br>**[Servomotor Connector]**<br>Straight plug:<br>N/MS3106B14-2S<br>(Japan Aviation Electronics Industry, Ltd.)<br>Cable clamp:<br>N/MS3057-6A<br>(Japan Aviation Electronics Industry, Ltd.) |
| | Robot Brake Cables | Cylindrical Servomotors, 3,000 r/min, 50 to 750 W<br>Flat Servomotors, 3,000 r/min, 100 to 400 W | R88A-CAGA□□□BR<br>The empty boxes in the model number are for the cable length. The cable can be 3, 5, 10, 15, 20, 30, 40, or 50 m long. | 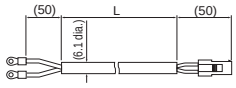 <br>**[Servomotor Connector]**<br>Connector:<br>172157-1 (Tyco Electronics AMP KK)<br>Connector pins:<br>170362-1 (Tyco Electronics AMP KK)<br>170366-1 (Tyco Electronics AMP KK) |

## ● Encoder Cables (for CN2)

| Symbol | Name | Connected to | Model | Description |
|---|---|---|---|---|
| ③ | Standard Encoder Cables with Connectors | Cylindrical Servomotors, 3,000 r/min, 50 to 750 W, absolute encoder<br>Flat Servomotors, 3,000 r/min, 100 to 400 W, absolute encoder | R88A-CRGA□□□C<br>The empty boxes in the model number are for the cable length. The cable can be 3, 5, 10, 15, 20, 30, 40, or 50 m long. | **[Servo Drive Connector]**<br>Connector:<br>3 to 20 m:<br>Crimped I/O connector:<br>(Molex Japan Co., Ltd.)<br>30 to 50 m: 55100-0670<br>(Molex Japan Co., Ltd.)<br>Connector pins:<br>50639-8028<br>(Molex Japan Co., Ltd.)<br> 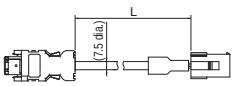 <br>**[Servomotor Connector]**<br>Connector:<br>172161-1<br>(Tyco Electronics AMP KK)<br>Connector pins:<br>170365-1<br>(Tyco Electronics AMP KK)<br>171639-1<br>(Tyco Electronics AMP KK) |
| | | Cylindrical Servomotors, 3,000 r/min, 50 to 750 W, incremental encoder<br>Flat Servomotors, 3,000 r/min, 100 to 400 W, incremental encoder | R88A-CRGB□□□C<br>The empty boxes in the model number are for the cable length. The cable can be 3, 5, 10, 15, 20, 30, 40, or 50 m long. | **[Servo Drive Connector]**<br>Connector:<br>3 to 20 m:<br>Crimped I/O connector:<br>(Molex Japan Co., Ltd.)<br>30 to 50 m: 55100-0670<br>(Molex Japan Co., Ltd.)<br>Connector pins:<br>50639-8028<br>(Molex Japan Co., Ltd.)<br> 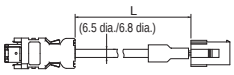 <br>**[Servomotor Connector]**<br>Connector:<br>172160-1<br>(Tyco Electronics AMP KK)<br>Connector pins:<br>170365-1<br>(Tyco Electronics AMP KK)<br>171639-1<br>(Tyco Electronics AMP KK) |
| | | Cylindrical Servomotors, 3,000 r/min,1 to 1.5 kW<br>Cylindrical Servomotors, 2,000 r/min,1 to 5 kW<br>Cylindrical Servomotors, 1,500 r/min, 7.5 kW<br>Cylindrical Servomotors, 1,000 r/min, 900 W to 6 kW | R88A-CRGC□□□N<br>The empty boxes in the model number are for the cable length. The cable can be 3, 5, 10, 15, 20, 30, 40, or 50 m long. | **[Servo Drive Connector]**<br>Connector:<br>3 to 20 m:<br>Crimped I/O connector:<br>(Molex Japan Co., Ltd.)<br>30 to 50 m: 55100-0670<br>(Molex Japan Co., Ltd.)<br>Connector pins:<br>50639-8028<br>(Molex Japan Co., Ltd.)<br> 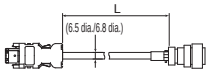 <br>**[Servomotor Connector]**<br>Straight plug:<br>N/MS3106B20-29S<br>(Japan Aviation Electronics Industry, Ltd.)<br>Cable clamp:<br>N/MS3057-12A<br>(Japan Aviation Electronics Industry, Ltd.) |
| | Robot Encoder Cables with Connectors | Cylindrical Servomotors, 3,000 r/min,50 to 750 W, absolute encoder<br>Flat Servomotors, 3,000 r/min, 100 to 400 W, absolute encoder | R88A-CRGA□□□CR<br>The empty boxes in the model number are for the cable length. The cable can be 3, 5, 10, 15, 20, 30, 40, or 50 m long. | **[Servo Drive Connector]**<br>Connector:<br>Crimped I/O connector:<br>(Molex Japan Co., Ltd.)<br>Connector pins:<br>50639-8028<br>(Molex Japan Co., Ltd.)<br> 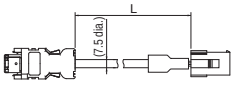 <br>**[Servomotor Connector]**<br>Connector:<br>172161-1<br>(Tyco Electronics AMP KK)<br>Connector pins:<br>170365-1<br>(Tyco Electronics AMP KK) |
| | | Cylindrical Servomotors, 3,000 r/min, 50 to 750 W, incremental encoder<br>Flat Servomotors, 3,000 r/min, 100 to 400 W, incremental encoder | R88A-CRGB□□□CR<br>The empty boxes in the model number are for the cable length. The cable can be 3, 5, 10, 15, 20, 30, 40, or 50 m long. | **[Servo Drive Connector]**<br>Connector:<br>Crimped I/O connector:<br>(Molex Japan Co., Ltd.)<br>Connector pins:<br>50639-8028<br>(Molex Japan Co., Ltd.)<br> 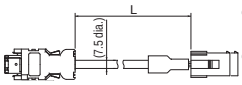 <br>**[Servomotor Connector]**<br>Connector:<br>172160-1<br>(Tyco Electronics AMP KK)<br>Connector pins:<br>170365-1<br>(Tyco Electronics AMP KK) |
| | | Cylindrical Servomotors, 3,000 r/min,1 to 1.5 kW<br>Cylindrical Servomotors, 2,000 r/min,1 to 5 kW<br>Cylindrical Servomotors, 1,500 r/min, 7.5 kW<br>Cylindrical Servomotors, 1,000 r/min, 900 W to 6 kW | R88A-CRGC□□□NR<br>The empty boxes in the model number are for the cable length. The cable can be 3, 5, 10, 15, 20, 30, 40, or 50 m long. | **[Servo Drive Connector]**<br>Connector:<br>Crimped I/O connector:<br>(Molex Japan Co., Ltd.)<br>Connector pins:<br>50639-8028<br>(Molex Japan Co., Ltd.)<br> 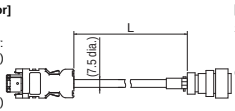 <br>**[Servomotor Connector]**<br>Straight plug:<br>N/MS3106B20-29S<br>(Japan Aviation Electronics Industry, Ltd.)<br>Cable clamp:<br>N/MS3057-12A<br>(Japan Aviation Electronics Industry, Ltd.) |

## ● Absolute Encoder Backup Battery and Absolute Encoder Battery Cable

| Symbol | Name | Contents | Length (m) | Model | Description |
|---|---|---|---|---|---|
| ④ | Absolute Encoder Battery Cable | Battery not included. | 0.3 m | R88A-CRGD0R3C | 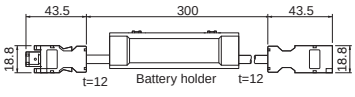 |
| | | One R88A-BAT01G Battery included. | 0.3 m | R88A-CRGD0R3C-BS | |
| | Absolute Encoder Backup Battery | – | – | R88A-BAT01G | – |

## ● Control Cables (for CN1)

| Symbol | Name | Connected to | | Model |
|---|---|---|---|---|
| ⑤ | Control Cables | Motion Control Units<br>(for all CS1/C200H) | | R88A-CPG□□□M♦<br>The empty boxes in the model number are for the cable length.<br>The cable can be 1, 2, 3, or 5 m long.<br>The empty diamond in the model number is for the number of axes.<br>One axis: 1, Two axes: 2 |
| ⑥ | Direct connection cable for Position Control Unit (High-speed type) | Line-driver output type (High-speed type)<br>for CJ1W-NC234/434 | For 1 axis | XW2Z-□□□J-G9<br>The empty boxes in the model number are for the cable length.<br>The cable can be 1, 5, or 10 m long. |
| | | Line-driver output type (High-speed type)<br>for CJ1W-NC234/434 | For 2 axis | XW2Z-□□□J-G1<br>The empty boxes in the model number are for the cable length.<br>The cable can be 1, 5, or 10 m long. |
| | | Open collector output type (High-speed type)<br>for CJ1W-NC214/NC414 | For 1 axis | XW2Z-□□□J-G13<br>The empty boxes in the model number are for the cable length.<br>The cable can be 1, or 3 m long. |
| | | Open collector output type (High-speed type)<br>for CJ1W-NC214/NC414 | For 2 axis | XW2Z-□□□J-G5<br>The empty boxes in the model number are for the cable length.<br>The cable can be 1, or 3 m long. |
| ⑦ | Servo Relay Units | CJ1W-NC113/NC133<br>CS1W-NC113/NC133<br>(C200HW-NC113) | | XW2B-20J6-1B |
| | | CJ1W-NC213/NC233/NC413/NC433<br>CS1W-NC213/NC233/NC413/NC433<br>(C200HW-NC213/NC413) | | XW2B-40J6-2B |
| | | CJ1M-CPU21/CPU22/CPU23 (1 axis) | | XW2B-20J6-8A |
| | | CJ1M-CPU21/CPU22/CPU23 (2 axes) | | XW2B-40J6-9A |
| | | FQM1-MMA22<br>FQM1-MMP22 | | XW2B-80J7-12A |
| ⑧ | Servo Relay Unit Cables for<br>Servo Drives | CJ1M-CPU21/-CPU22/-CPU23<br>(XW2B-20J6-8A and XW2B-40J6-9A) | | XW2Z-□□□J-B31 |
| | | FQM1-MMA22<br>(XW2B-80J7-12A) | | XW2Z-□□□J-B27<br>The empty boxes in the model number are for the cable length.<br>The cable can be 1 or 2 m long. |
| | | FQM1-MMP22<br>(XW2B-80J7-12A) | | XW2Z-□□□J-B26<br>The empty boxes in the model number are for the cable length.<br>The cable can be 1 or 2 m long. |
| ⑨ | Servo Relay Unit Cables for<br>Position Control Units | CJ1W-NC133 | | XW2Z-□□□J-A18<br>The empty boxes in the model number are for the cable length.<br>The cable can be 0.5 or 1 m long. |
| | | CJ1W-NC233/NC433 | | XW2Z-□□□J-A19<br>The empty boxes in the model number are for the cable length.<br>The cable can be 0.5 or 1 m long. |
| | | CS1W-NC133 | | XW2Z-□□□J-A10<br>The empty boxes in the model number are for the cable length.<br>The cable can be 0.5 or 1 m long. |
| | | CS1W-NC233/NC433 | | XW2Z-□□□J-A11<br>The empty boxes in the model number are for the cable length.<br>The cable can be 0.5 or 1 m long. |
| | | CJ1W-NC113 | | XW2Z-□□□J-A14<br>The empty boxes in the model number are for the cable length.<br>The cable can be 0.5 or 1 m long. |
| | | CJ1W-NC213/NC413 | | XW2Z-□□□J-A15<br>The empty boxes in the model number are for the cable length.<br>The cable can be 0.5 or 1 m long. |
| | | CS1W-NC113<br>C200HW-NC113 | | XW2Z-□□□J-A6<br>The empty boxes in the model number are for the cable length.<br>The cable can be 0.5 or 1 m long. |
| | | CS1W-NC213/NC413<br>C200HW-NC213/NC413 | | XW2Z-□□□J-A7<br>The empty boxes in the model number are for the cable length.<br>The cable can be 0.5 or 1 m long. |
| | | CJ1M-CPU21/CPU22/CPU23 | | XW2Z-□□□J-A33<br>The empty boxes in the model number are for the cable length.<br>The cable can be 0.5, 1, or 2 m long. |
| | | FQM1-MMA22<br>FQM1-MMP22<br>(General-purpose I/O) | | XW2Z-□□□J-A28<br>The empty boxes in the model number are for the cable length.<br>The cable can be 0.5 or 1 m long. |
| | | FQM1-MMA22 (Special I/O) | | XW2Z-□□□J-A31<br>The empty boxes in the model number are for the cable length.<br>The cable can be 0.5, 1, or 2 m long. |
| | | FQM1-MMP22 (Special I/O) | | XW2Z-□□□J-A30<br>The empty boxes in the model number are for the cable length.<br>The cable can be 0.5, 1, or 2 m long. |

| Symbol | Name | Connected to | Model |
|---|---|---|---|
| ⑩ | General-purpose Control Cables | Cables for General-purpose Controllers | R88A-CPG□□□S<br>The empty boxes in the model number are for the cable length.<br>The cable can be 1 or 2 m long. |
| ⑪ | Connector Terminal Block Cables | Cables for General-purpose Controllers | XW2Z-□□□J-B24<br>The empty boxes in the model number are for the cable length.<br>The cable can be 1 or 2 m long. |
| | Connector-Terminal Block Conversion Units | Conversion Unit for General-purpose Controllers (M3 screws) | XW2B-50G4 |
| | | Conversion Unit for General-purpose Controllers (M3.5 screws) | XW2B-50G5 |
| | | Conversion Unit for General-purpose Controllers (M3 screws) | XW2D-50G6 |

**Note:** Use the following codes in □□□ for the cable length: 0.5 m: 050, 1 m: 100, 2 m: 200, 3 m: 300, 5 m: 500, and 10 m:10M.
However, for General-purpose Control Cables, use “001” for a 1-m cable.

## ● Communications Connector (for CN3)

| Symbol | Name | Contents | Length (m) | Model |
|---|---|---|---|---|
| ⑫ | RS485 Communications Cables | – | – | R88A-CCG□□□P4<br>The empty boxes in the model number are for the cable length.<br>The cable can be 0.5 or 1 m long. |
| ⑬ | Parameter Unit | – | 1.5 m | R88A-PR02G |
| ⑭ | Personal Computer Monitor Cable | for Windows<br>RS232 Communications | 2 m | R88A-CCG002P2 |

## ● Control Cables

| Symbol | Name | Connected to | Model |
|---|---|---|---|
| – | Servomoteor Connector for Encoder Cable, absolute Encoder | for moter | R88A-CNG01R |
| – | Servomoteor Connector for Encoder Cable, Incremental Encoder | for moter | R88A-CNG02R |
| – | Control I/O Connector (CN1) | for drive | R88A-CNU01C |
| – | Encoder Connector (CN2) | – | R88A-CNW01R |
| – | Power Cable Connector (750 W max.) | – | R88A-CNG01A |
| – | Brake Cable Connector (750 W max.) | – | R88A-CNG01B |

# Servo Drive Specifications (R88D-GT)

## ● General Specifications

| Item | | | Specifications |
|---|---|---|---|
| Ambient operating temperature and operating humidity | | | 0 to 55°C, 90% RH max. (with no condensation) |
| Ambient storage temperature and storage humidity | | | –20 to 65°C, 90% RH max. (with no condensation) |
| Storage and operating atmosphere | | | No corrosive gasses |
| Vibration resistance | | | Smaller of either 10 to 60 Hz with double amplitude of 0.1 mm or acceleration of 5.88 m/s² max. in X, Y, and Z directions. |
| Impact resistance | | | Acceleration of 19.6 m/s² max. 2 times each in X, Y, and Z directions |
| Insulation resistance | | | Between power supply/power line terminals and frame ground: 0.5 MΩ min. (at 500 VDC) |
| Dielectric strength | | | Between power supply/power line terminals and frame ground: 1,500 VAC for 1 min at 50/60 Hz<br>Between each control signal and frame ground: 500 VAC for 1 min |
| Protective structure | | | Built into panel (IP10). |
| International standards | EC Directives | EMC Directive | EN 55011 class A group 1 |
| | | | EN 61000-6-2, IEC 61000-4-2/-3/-4/-5/-6/-11 |
| | | Low voltage Directive | EN 50178 |
| | UL standards | | UL 508C |
| | CSA standards | | CSA C22.2 No.14 |
| | Korean Radio Regulations (KC) | | Certified |

**Note: 1.** The above items reflect individual evaluation testing. The results may differ under compound conditions.
**Note: 2.** Always disconnect all connections to the Servo Drive before you perform insulation resistance tests on it. If you perform an insulation resistance test while the Servo Drive is connected, the Servo Drive may be damaged.
Never perform dielectric strength tests on the Servo Drive. Failure to follow this precaution may result in damaging internal elements.
**Note: 3.** Depending on the operating conditions, some Servo Drive parts will require maintenance.
**Note: 4.** The service life of the Servo Drive is 28,000 hours at an average ambient temperature of 55°C at 100% of the rated torque.

## ● Characteristics

### Servo Drives with 100-VAC Input Power

| Item | | | | R88D-GTA5L | R88D-GT01L | R88D-GT02L | R88D-GT04L |
|---|---|---|---|---|---|---|---|
| Continuous output current (rms) | | | | 1.3 A | 1.8 A | 2.4 A | 4.9 A |
| Momentary maximum output current (rms) | | | | 3.9 A | 5.4 A | 7.2 A | 14.7 A |
| Input power supply | Main circuit | Power supply capacity | | 0.4 KVA | 0.4 KVA | 0.5 KVA | 0.9 KVA |
| | | Power supply voltage | | Single-phase 100 to 115 VAC (85 to 127 V), 50/60 Hz | | | |
| | | Rated current | | 1.4 A | 2.2 A | 3.7 A | 6.6 A |
| | Control circuit | Power supply voltage | | Single-phase 100 to 115 VAC (85 to 127 V), 50/60 Hz | | | |
| | | Rated current | | 0.09 A | 0.09 A | 0.09 A | 0.09 A |
| Heat generated | Main circuit | | | 10.1 W | 14.4 W | 18.4 W | 41.4 W |
| | Control circuit | | | 4.4 W | 4.4 W | 4.4 W | 4.4 W |
| Control method | | | | All-digital servo | | | |
| Inverter method | | | | IGBT-driven PWM method | | | |
| PWM frequency | | | | 12.0 kHz | | 6.0 kHz | |
| Weight | | | | Approx. 0.8 kg | Approx. 0.8 kg | Approx. 1.1 kg | Approx. 1.5 kg |
| Maximum applicable motor capacity | | | | 50 W | 100 W | 200 W | 400 W |
| Applicable Servomotors (R88M-) | 3,000-r/min Servomotors | | INC | G05030H | G10030L | G20030L | G40030L |
| | | | ABS | G05030T | G10030S | G20030S | G40030S |
| | 3,000-r/min Flat Servomotors | | INC | – | GP10030L | GP20030L | GP40030L |
| | | | ABS | – | GP10030S | GP20030S | GP40030S |
| | 2,000-r/min Servomotors | | ABS | – | – | – | – |
| | 1,000-r/min Servomotors | | ABS | – | – | – | – |
| Performance | Speed control range | | | 1: 5000 | | | |
| | Speed variability: Load characteristic | | | 0.01% or less at 0% to 100% (at rated speed) | | | |
| | Speed variability: Voltage characteristic | | | 0% at ±10% of rated voltage (at rated speed) | | | |
| | Speed variability: Temperature characteristic | | | ±0.1% or less at 0 to 50°C (at rated speed) | | | |
| | Torque control reproducibility | | | ±3% | | | |

## Servo Drives with Single-phase 200-VAC Input Power

| Item | | | | R88D-GT01H | R88D-GT02H | R88D-GT04H | R88D-GT08H | R88D-GT10H | R88D-GT15H |
|---|---|---|---|---|---|---|---|---|---|
| Continuous output current (rms) | | | | 1.16 A | 1.6 A | 2.7 A | 4.0 A | 5.9 A | 9.8 A |
| Momentary maximum output current (rms) | | | | 3.5 A | 5.3 A | 7.1 A | 14.1 A | 21.2 A | 28.3 A |
| Input power supply | Main circuit | Power supply capacity | | 0.5 KVA | 0.5 KVA | 0.9 KVA | 1.3 KVA | 1.8 KVA | 2.3 KVA |
| | | Power supply voltage | | Single-phase 200 to 240 VAC (170 to 264 V), 50/60 Hz | | | Single-phase or three-phase 200 to 240 VAC (170 to 264 V), 50/60 Hz | | |
| | | Rated current | | 1.3 A | 2.0 A | 3.7 A | 5.0/3.3 *1 A | 7.5/4.1 *1 A | 11/8.0 *1 A |
| | Control circuit | Power supply voltage | | Single-phase 200 to 240 VAC (170 to 264 V), 50/60 Hz | | | | | |
| | | Rated current | | 0.05 A | 0.05 A | 0.05 A | 0.05 A | 0.07 A | 0.07 A |
| Heat generated | Main circuit | | | 14.3 W | 14.8 W | 23.6 W | 38.7 W | 52.9 W | 105.9 W |
| | Control circuit | | | 4.5 W | 4.5 W | 4.5 W | 4.3 W | 6.1 W | 6.1 W |
| PWM frequency | | | | 12.0 kHz | | 6.0 kHz | | | |
| Weight | | | | Approx. 0.8 kg | Approx. 0.8 kg | Approx. 1.1 kg | Approx. 1.5 kg | Approx. 1.7 kg | Approx. 1.7 kg |
| Maximum applicable motor capacity | | | | 100 W | 200 W | 400 W | 750 W | 1 k W | 1.5 kW |
| Applicable Servomotors (R88M-) | 3,000-r/min Servomotors | | INC | G05030H<br>G10030H | G20030H | G40030H | G75030H | – | – |
| | | | ABS | G05030T<br>G10030T | G20030T | G40030T | G75030T | – | G1K030T<br>G1K530T |
| | 3,000-r/min Flat Servomotors | | INC | GP10030H | GP20030H | GP40030H | – | – | – |
| | | | ABS | GP10030T | GP20030T | GP40030T | – | – | – |
| | 2,000-r/min Servomotors | | ABS | – | – | – | – | G1K020T | G1K520T |
| | 1,000-r/min Servomotors | | ABS | – | – | – | – | – | G90010T |
| Control method | | | | All-digital servo | | | | | |
| Inverter method | | | | IGBT-driven PWM method | | | | | |
| Performance | Speed control range | | | 1:5000 | | | | | |
| | Speed variability: Load characteristic | | | 0.01% or less at 0% to 100% (at rated speed) | | | | | |
| | Speed variability: Voltage characteristic | | | 0% at ±10% of rated voltage (at rated speed) | | | | | |
| | Speed variability: Temperature characteristic | | | ±0.1% or less at 0 to 50°C (at rated speed) | | | | | |
| | Torque control reproducibility | | | ±3% | | | | | |

*1. The left value is for single-phase input power and the right value is for three-phase input power.

## Servo Drives with Three-phase 200-VAC Input Power

| Item | | | | R88D-GT20H | R88D-GT30H | R88D-GT50H | R88D-GT75H |
|---|---|---|---|---|---|---|---|
| Continuous output current (rms) | | | | 14.3 A | 17.4 A | 31.0 A | 45.4 A |
| Momentary maximum output current (rms) | | | | 45.3 A | 63.6 A | 84.8 A | 170.0 A |
| Input power supply | Main circuit | Power supply capacity | | 3.3 KVA | 4.5 KVA | 7.5 KVA | 11 KVA |
| | | Power supply voltage | | Three-phase 200 to 230 VAC (170 to 253 V), 50/60 Hz | | | |
| | | Rated current | | 10.2 A | 15.2 A | 23.7 A | 35.0 A |
| | Control circuit | Power supply voltage | | Single-phase 200 to 230 VAC (170 to 253 V), 50/60 Hz | | | |
| | | Rated current | | 0.1 A | 0.12 A | 0.12 A | 0.14 A |
| Heat generated | Main circuit | | | 112.3 W | 219.6 W | 391.7 W | 376.2 W |
| | Control circuit | | | 10.7 W | 13.3 W | 13.3 W | 13.8 W |
| PWM frequency | | | | 6.0 kHz | | | |
| Weight | | | | Approx. 3.2 kg | Approx. 6.0 kg | Approx. 6.0 kg | Approx. 16.4 kg |
| Maximum applicable motor capacity | | | | 2 kW | 3 kW | 5 kW | 7.5 kW |
| Applicable Servomotors (R88M-) | 3,000-r/min Servomotors | | INC | – | – | – | – |
| | | | ABS | G2K030T | G3K030T | G4K030T<br>G5K030T | – |
| | 3,000-r/min Flat Servomotors | | INC | – | – | – | – |
| | | | ABS | – | – | – | – |
| | 2,000-r/min Servomotors | | ABS | G2K020T | G3K020T | G4K020T<br>G5K020T | G7K515T |
| | 1,000-r/min Servomotors | | ABS | – | G2K010T | G3K010T<br>G4K510T | G6K010T |
| Control method | | | | All-digital servo | | | |
| Inverter method | | | | IGBT-driven PWM method | | | |
| Performance | Speed control range | | | 1:5000 | | | |
| | Speed variability: Load characteristic | | | 0.01% or less at 0% to 100% (at rated speed) | | | |
| | Speed variability: Voltage characteristic | | | 0% at ±10% of rated voltage (at rated speed) | | | |
| | Speed variability: Temperature characteristic | | | ±0.1% or less at 0 to 50°C (at rated speed) | | | |
| | Torque control reproducibility | | | ±3% | | | |

# Servomotor Specifications (R88M-G)

## ● General Specifications

| Item | | | 3,000-r/min Servomotors | | 3,000-r/min Flat Servomotors | 1,000-r/min Servomotors<br>2,000-r/min Servomotors | |
|---|---|---|---|---|---|---|---|
| | | | 50 to 750 W | 1 to 5 kW | | 900 W to 5 kW | 6 to 7.5 kW |
| Ambient operating temperature and humidity | | | 0 to 40°C, 85% RH max. (with no condensation) | | | | |
| Ambient storage temperature and humidity | | | –20 to 65°C, 85% RH max. (with no condensation) | –20 to 80°C, 85% RH max. (with no condensation) | | | |
| Storage and operating atmosphere | | | No corrosive gases | | | | |
| Vibration resistance *1 | | | 10 to 2,500 Hz and acceleration of 49 m/s² max. in the X, Y, and Z directions | 10 to 2,500 Hz and acceleration of 24.5 m/s² max. in the X, Y, and Z directions | 10 to 2,500 Hz and acceleration of 49 m/s² max. in the X, Y, and Z directions | 10 to 2,500 Hz and acceleration of 24.5 m/s² max. in the X, Y, and Z directions | |
| Impact resistance | | | Acceleration of 98 m/s² max. 3 times each in the X, Y, and Z directions | Acceleration of 98 m/s² max. 3 times each in the X, Y, and Z directions | Acceleration of 98 m/s² max. 3 times each in the X, Y, and Z directions | Acceleration of 98 m/s² max. 2 times vertically | |
| Insulation resistance | | | 20 MΩ min. at 500 VDC between the power terminals and FG terminal | | | | |
| Dielectric strength | | | 1,500 VAC (50 or 60 Hz) for 1 minute between the power terminals and FG terminal | | | | |
| Operating position | | | All directions | | | | |
| Insulation grade | | | Type B | Type F | Type B | Type F | |
| Structure | | | Totally enclosed, self-cooling | | | | |
| Protective structure | | | IP65 (excluding the output shaft rotating section and lead wire ends) | | | | |
| Vibration grade | | | V-15 | | | | |
| Mounting method | | | Flange-mounting | | | | |
| International standards | EC Directives | Low voltage Directive | IEC 60034-1/-5 | | | | |
| International standards | UL standards | | UL1004-1 | | | | – |
| International standards | CSA standards | | CSA 22.2 No.100 | | | | |

*1. The amplitude may be amplified by mechanical resonance. Do not exceed 80% of the specified value for extended periods of time.

**Note: 1.** Do not use the cable when it is laying in oil or water.
**Note: 2.** Do not expose the cable outlet or connections to stress due to bending or the weight of the cable itself.
**Note: 3.** Always disconnect all connections to the Servo Drive before you perform insulation resistance tests on it. If you perform an insulation resistance test while the Servo Drive is connected, the Servo Drive may be damaged.
Never perform dielectric strength tests on the Servo Drive. Failure to follow this precaution may result in damaging internal elements.

# Servomoter Specifications (R88M-G)

## ● Characteristics

### 3,000-r/min Cylindrical Servomotors

### 100-VAC Input Power

| Item | | Model (R88M-) / Unit | G05030H / G05030T | G10030L / G10030S | G20030L / G20030S | G40030L / G40030S |
|---|---|---|---|---|---|---|
| Rated output *1 | | W | 50 | 100 | 200 | 400 |
| Rated torque *1 | | N·m | 0.16 | 0.32 | 0.64 | 1.3 |
| Rated rotation speed | | r/min | 3000 | | | |
| Max. momentary rotation speed | | r/min | 5000 | | | |
| Max. momentary torque *1 | | N·m | 0.45 | 0.93 | 1.78 | 3.6 |
| Rated current *1 | | A (rms) | 1.1 | 1.7 | 2.5 | 4.6 |
| Max. momentary current *1 | | A (rms) | 3.4 | 5.1 | 7.6 | 13.9 |
| Rotor inertia | | kg·m² (GD²/4) | $2.5 \times 10^{-6}$ | $5.1 \times 10^{-6}$ | $1.4 \times 10^{-5}$ | $2.6 \times 10^{-5}$ |
| Applicable load inertia | | — | 30 times the rotor inertia max. *2 | | | |
| Torque constant *1 | | N·m/A | 0.14 | 0.19 | 0.26 | 0.28 |
| Power rate *1 | | kW/s | 10.4 | 20.1 | 30.3 | 62.5 |
| Mechanical time constant | | ms | 1.56 | 1.11 | 0.72 | 0.55 |
| Electrical time constant | | ms | 0.7 | 0.8 | 2.5 | 2.9 |
| Allowable radial load *3 | | N | 68 | 68 | 245 | 245 |
| Allowable thrust load *3 | | N | 58 | 58 | 98 | 98 |
| Weight | Without brake | kg | Approx. 0.3 | Approx. 0.5 | Approx. 0.8 | Approx. 1.2 |
| | With brake | kg | Approx. 0.5 | Approx. 0.7 | Approx. 1.3 | Approx. 1.7 |
| Radiation shield dimensions (material) | | | 100 × 80 × t10 (Al) | | 130 × 120 × t12 (Al) | |
| Applicable Servo Drives (R88D-) | | | GTA5L | GT01L | GT02L | GT04L |
| Brake specifications | Brake inertia | kg·m² (GD²/4) | $2 \times 10^{-7}$ | $2 \times 10^{-7}$ | $1.8 \times 10^{-6}$ | $1.8 \times 10^{-6}$ |
| | Excitation voltage *4 | V | 24 VDC ±5% | | | |
| | Power consumption (at 20°C) | W | 7 | 7 | 9 | 9 |
| | Current consumption (at 20°C) | A | 0.3 | 0.3 | 0.36 | 0.36 |
| | Static friction torque | N·m | 0.29 min. | 0.29 min. | 1.27 min. | 1.27 min. |
| | Attraction time *5 | ms | 35 max. | 35 max. | 50 max. | 50 max. |
| | Release time *5 | ms | 20 max. | 20 max. | 15 max. | 15 max. |
| | Backlash | | ±1° | | | |
| | Allowable work per braking | J | 39.2 | 39.2 | 137 | 137 |
| | Allowable total work | J | $4.9 \times 10^3$ | $4.9 \times 10^3$ | $44.1 \times 10^3$ | $44.1 \times 10^3$ |
| | Allowable angular acceleration | rad/s² | 30,000 max. (Speed of 2,800 r/min or more must not be changed in less than 10 ms) | | | |
| | Brake life | — | 10,000,000 operations min. | | | |
| | Rating | — | Continuous | | | |
| | Insulation grade | — | Type F | | | |

*1. These are the values when the Servomotor is combined with a Servo Drive at room temperature (20°C, 65%). The maximum momentary torque shown above indicates the standard value.

*2. Applicable Load Inertia:
- The operable load inertia ratio (load inertia/rotor inertia) depends on the mechanical configuration and its rigidity. For a machine with high rigidity, operation is possible even with high load inertia. Select an appropriate motor and confirm that operation is possible.
- If the dynamic brake is activated frequently with high load inertia, the dynamic brake resistor may burn. Do not repeatedly turn the Servomotor ON and OFF while the dynamic brake is enabled.
- The dynamic brake is designed only for emergency stops. Design the system so that the Servomotor remains stopped for at least 3 minutes after applying the dynamic brake. Otherwise the dynamic brake circuits may fail.

*3. The allowable radial and thrust loads are the values determined for a service life of 20,000 hours at normal operating temperatures. The allowable radial loads are applied as shown in the following diagram.

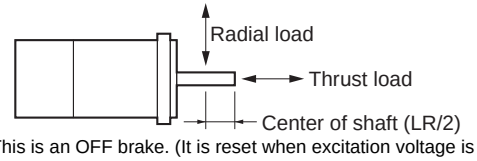


*4. This is an OFF brake. (It is reset when excitation voltage is applied).

*5. The operation time is the value (reference value) measured with a surge suppressor (CR50500 manufactured by Okaya Electric Industries Co., Ltd.).

## Torque and Rotation Speed Characteristics

### 3,000-r/min Cylindrical Servomotors

- **3,000-r/min Servomotors with 100-VAC Power Input**

The following graphs show the characteristics with a 3-m standard cable and a 100-VAC input.

**R88M-G05030H/T (50 W)**

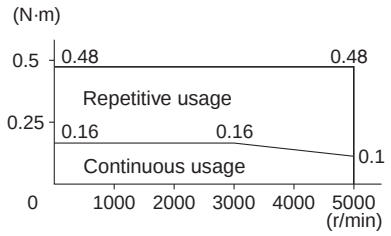


**R88M-G10030L/S (100 W)**

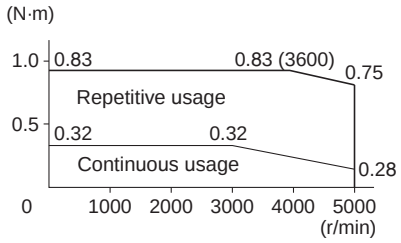


**R88M-G20030L/S (200 W)**

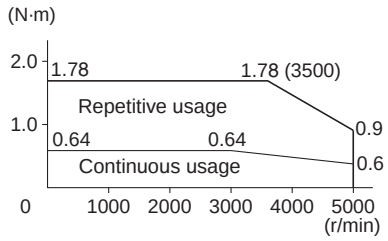


**R88M-G40030L/S (400 W)**

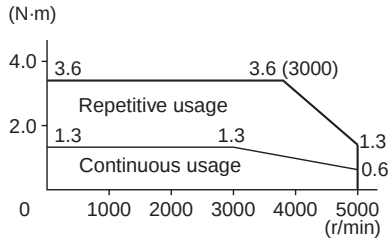

# Servomotor Specifications (R88M-G)

## ● Characteristics

### 3,000-r/min Cylindrical Servomotors

### 200-VAC Input Power

| Item | | Model (R88M-) / Unit | G05030H / G05030T | G10030H / G10030T | G20030H / G20030T | G40030H / G40030T | G75030H / G75030T | – / G1K030T | – / G1K530T | – / G2K030T | – / G3K030T | – / G4K030T | – / G5K030T |
|---|---|---|---|---|---|---|---|---|---|---|---|---|---|
| Rated output t *1 | | W | 50 | 100 | 200 | 400 | 750 | 1000 | 1500 | 2000 | 3000 | 4000 | 5000 |
| Rated torque *1 | | N·m | 0.16 | 0.32 | 0.64 | 1.3 | 2.4 | 3.18 | 4.77 | 6.36 | 9.54 | 12.6 | 15.8 |
| Rated rotation speed | | r/min | 3000 | | | | | | | | | | |
| Max. momentary rotation speed | | r/min | 5000 | | | | 4500 | 5000 | | | | 4500 | |
| Max. momentary torque *1 | | N·m | 0.45 | 0.90 | 1.78 | 3.67 | 7.05 | 9.1 | 12.8 | 18.4 | 27.0 | 36.3 | 45.1 |
| Rated current *1 | | A (rms) | 1.1 | 1.1 | 1.6 | 2.6 | 4 | 7.2 | 9.4 | 13 | 18.6 | 24.7 | 28.5 |
| Max. momentary current *1 | | A (rms) | 3.4 | 3.4 | 4.9 | 7.9 | 12.1 | 21.4 | 28.5 | 40 | 57.1 | 75 | 85.7 |
| Rotor inertia | | kg·m² (GD²/4) | $2.5 \times 10^{-6}$ | $5.1 \times 10^{-6}$ | $1.4 \times 10^{-5}$ | $2.6 \times 10^{-5}$ | $8.7 \times 10^{-5}$ | $1.69 \times 10^{-4}$ | $2.59 \times 10^{-4}$ | $3.46 \times 10^{-4}$ | $6.77 \times 10^{-4}$ | $1.27 \times 10^{-3}$ | $1.78 \times 10^{-3}$ |
| Applicable load inertia | | – | 30 times the rotor inertia max. *2 | | | | 20 times the rotor inertia max. *2 | 15 times the rotor inertia max. *2 | | | | | |
| Torque constant *1 | | N·m/A | 0.14 | 0.19 | 0.41 | 0.51 | 0.64 | 0.44 | 0.51 | 0.48 | 0.51 | 0.51 | 0.57 |
| Power rate *1 | | kW/s | 10.4 | 20.1 | 30.3 | 62.5 | 66 | 60 | 88 | 117 | 134 | 125 | 140 |
| Mechanical time constant | | ms | 1.56 | 1.1 | 0.71 | 0.52 | 0.45 | 0.78 | 0.54 | 0.53 | 0.46 | 0.51 | 0.46 |
| Electrical time constant | | ms | 0.7 | 0.79 | 2.6 | 3 | 4.6 | 6.7 | 10 | 10.8 | 20 | 20 | 20 |
| Allowable radial load *3 | | N | 68 | 68 | 245 | 245 | 392 | 392 | 490 | 490 | 490 | 784 | 784 |
| Allowable thrust load *3 | | N | 58 | 58 | 98 | 98 | 147 | 147 | 196 | 196 | 196 | 343 | 343 |
| Weight | Without brake | kg | Approx. 0.3 | Approx. 0.5 | Approx. 0.8 | Approx. 1.2 | Approx. 2.3 | Approx. 4.5 | Approx. 5.1 | Approx. 6.5 | Approx. 9.3 | Approx. 12.9 | Approx. 17.3 |
| | With brake | kg | Approx. 0.5 | Approx. 0.7 | Approx. 1.3 | Approx. 1.7 | Approx. 3.1 | Approx. 5.1 | Approx. 6.5 | Approx. 7.9 | Approx. 11 | Approx. 14.8 | Approx. 19.2 |
| Radiation shield dimensions (material) | | | 100 × 80 × t10 (Al) | | 130 × 120 × t12 (Al) | | 170 × 160 × t12 (Al) | | 320 × 300 × t30 (Al) | 320 × 300 × t20 (Al) | 380 × 350 × t30 (Al) | | |
| Applicable Servo Drives (R88D-) | | | GT01H | GT01H | GT02H | GT04H | GT08H | GT15H | GT15H | GT20H | GT30H | GT50H | GT50H |
| Brake specifications | Brake inertia | kg·m² (GD²/4) | $2 \times 10^{-7}$ | $2 \times 10^{-7}$ | $1.8 \times 10^{-6}$ | $1.8 \times 10^{-6}$ | $7.5 \times 10^{-6}$ | $2.5 \times 10^{-5}$ | $3.3 \times 10^{-5}$ | $3.3 \times 10^{-5}$ | $3.3 \times 10^{-5}$ | $1.35 \times 10^{-4}$ | $1.35 \times 10^{-4}$ |
| | Excitation voltage *4 | V | 24 VDC ±5% | | | | | 24 VDC ±10% | | | | | |
| | Power consumption (at 20°C) | W | 7 | 7 | 9 | 9 | 10 | 18 | 19 | 19 | 19 | 22 | 22 |
| | Current consumption (at 20°C) | A | 0.3 | 0.3 | 0.36 | 0.36 | 0.42 | 0.74 | 0.81 | 0.81 | 0.81 | 0.9 | 0.9 |
| | Static friction torque | N·m | 0.29 min. | 0.29 min. | 1.27 min. | 1.27 min. | 2.45 min. | 4.9 min. | 7.8 min. | 7.8 min. | 11.8 min. | 16.1 min. | 16.1 min. |
| | Attraction time *5 | ms | 35 max. | 35 max. | 50 max. | 50 max. | 70 max. | 50 max. | 50 max. | 50 max. | 80 max. | 110 max. | 110 max. |
| | Release time *5 | ms | 20 max. | 20 max. | 15 max. | 15 max. | 20 max. | 15 max. | 15 max. | 15 max. | 15 max. | 50 max. | 50 max. |
| | Backlash | | ±1° | | | | | | | | | | |
| | Allowable work per braking | J | 39.2 | 39.2 | 137 | 137 | 196 | 392 | 392 | 392 | 392 | 1470 | 1470 |
| | Allowable total work | J | $4.9 \times 10^3$ | $4.9 \times 10^3$ | $44.1 \times 10^3$ | $44.1 \times 10^3$ | $147 \times 10^3$ | $2.0 \times 10^5$ | $4.9 \times 10^5$ | $4.9 \times 10^5$ | $4.9 \times 10^5$ | $2.2 \times 10^6$ | $2.2 \times 10^6$ |
| | Allowable angular acceleration | rad/s² | 30,000 max. (Speed of 2,800 r/min or more must not be changed in less than 10 ms) | | | | | 10,000 max. (Speed of 900 r/min or more must not be changed in less than 10 ms) | | | | | |
| | Brake life | – | 10,000,000 operations min. | | | | | | | | | | |
| | Rating | – | Continuous | | | | | | | | | | |
| | Insulation grade | – | Type F | | | | | | | | | | |

*1. These are the values when the Servomotor is combined with a Servo Drive at room temperature (20°C, 65%). The maximum momentary torque shown above indicates the standard value.

*2. Applicable Load Inertia:
- The operable load inertia ratio (load inertia/rotor inertia) depends on the mechanical configuration and its rigidity. For a machine with high rigidity, operation is possible even with high load inertia. Select an appropriate motor and confirm that operation is possible.
- If the dynamic brake is activated frequently with high load inertia, the dynamic brake resistor may burn. Do not repeatedly turn the Servomotor ON and OFF while the dynamic brake is enabled.
- The dynamic brake is designed only for emergency stops. Design the system so that the Servomotor remains stopped for at least 3 minutes after applying the dynamic brake. Otherwise the dynamic brake circuits may fail.

*3. The allowable radial and thrust loads are the values determined for a service life of 20,000 hours at normal operating temperatures. The allowable radial loads are applied as shown in the following diagram.

*4. This is an OFF brake. (It is reset when excitation voltage is applied).

*5. The operation time is the value (reference value) measured with a surge suppressor (CR50500 manufactured by Okaya Electric Industries Co., Ltd.).

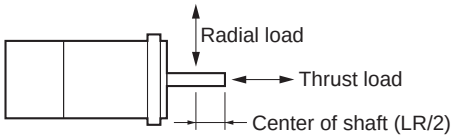

## Torque and Rotation Speed Characteristics

### 3,000-r/min Cylindrical Servomotors

- **3,000-r/min Servomotors with 200-VAC Power Input**

The following graphs show the characteristics with a 3-m standard cable and a 200-VAC input.

**R88M-G05030H/T (50 W)**

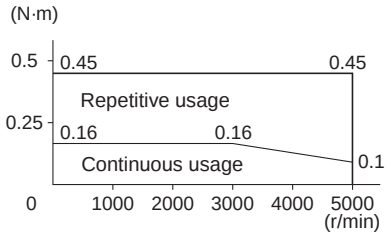


**R88M-G10030H/T (100 W)**

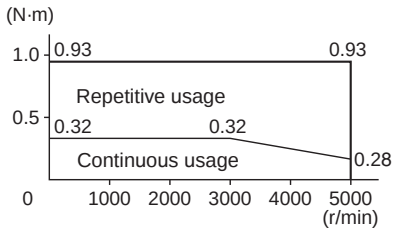


**R88M-G20030H/T (200 W)**

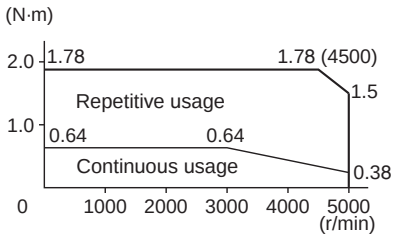


**R88M-G40030H/T (400 W)**

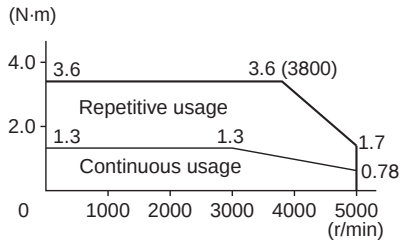


**R88M-G75030H/T (750 W)**

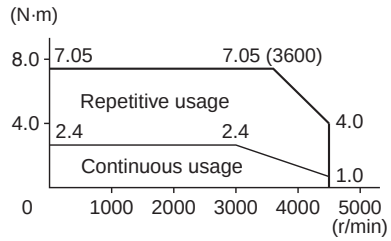


**R88M-G1K030T (1 kW)**

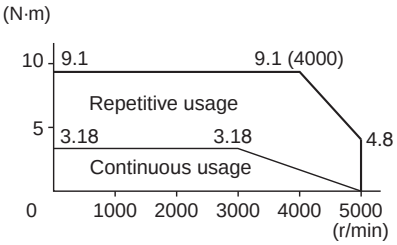


**R88M-G1K530T (1.5 kW)**

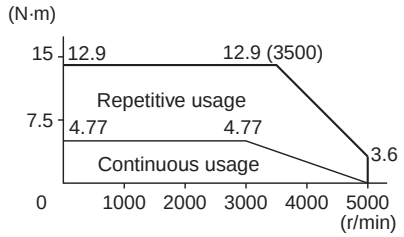


**R88M-G2K030T (2 kW)**

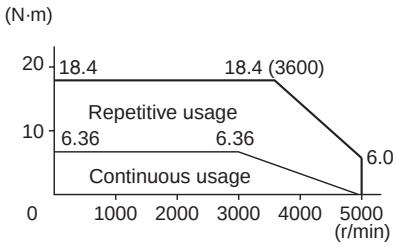


**R88M-G3K030T (3 kW)**

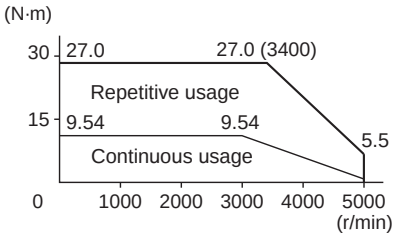


**R88M-G4K030T (4 kW)**

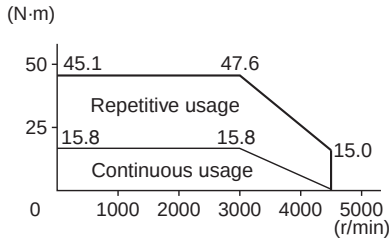


**R88M-G5K030T (5 kW)**

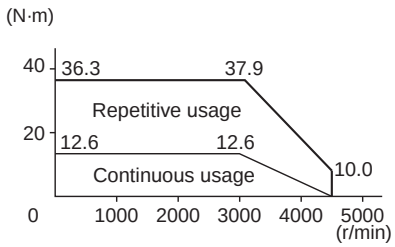

# Servomotor Specifications (R88M-GP)

## ● Characteristics

### 3,000-r/min Flat Servomotors

| Item | | Unit | Model (R88M-) | 100 VAC | | | 200 VAC | | |
|---|---|---|---|---|---|---|---|---|---|
| | | | | GP10030L | GP20030L | GP40030L | GP10030H | GP20030H | GP40030H |
| | | | | GP10030S | GP20030S | GP40030S | GP10030T | GP20030T | GP40030T |
| Rated output *1 | | W | | 100 | 200 | 400 | 100 | 200 | 400 |
| Rated torque *1 | | N·m | | 0.32 | 0.64 | 1.3 | 0.32 | 0.64 | 1.3 |
| Rated rotation speed | | r/min | | 3000 | | | | | |
| Max. momentary rotation speed | | r/min | | 5000 | | 4500 | 5000 | | |
| Max. momentary torque *1 | | N·m | | 0.84 | 1.8 | 3.6 | 0.86 | 1.8 | 3.65 |
| Rated current *1 | | A (rms) | | 1.6 | 2.5 | 4.4 | 1 | 1.6 | 2.5 |
| Max. momentary current *1 | | A (rms) | | 4.9 | 7.5 | 13.3 | 3.1 | 4.9 | 7.5 |
| Rotor inertia | | kg·m² (GD²/4) | | $1.0 \times 10^{-5}$ | $3.5 \times 10^{-5}$ | $6.5 \times 10^{-5}$ | $1.0 \times 10^{-5}$ | $3.5 \times 10^{-5}$ | $6.4 \times 10^{-5}$ |
| Applicable load inertia | | --- | | 20 times the rotor inertia max.*2 | | | | | |
| Torque constant *1 | | N·m/A | | 0.21 | 0.27 | 0.3 | 0.34 | 0.42 | 0.54 |
| Power rate *1 | | kW/s | | 10.2 | 11.7 | 26.0 | 10.2 | 11.5 | 25.5 |
| Mechanical time constant | | ms | | 0.87 | 0.75 | 0.55 | 1.05 | 0.81 | 0.59 |
| Electrical time constant | | ms | | 3.4 | 6.7 | 6.7 | 2.9 | 5.6 | 6.6 |
| Allowable radial load *3 | | N | | 68 | 245 | 245 | 68 | 245 | 245 |
| Allowable thrust load *3 | | N | | 58 | 98 | 98 | 58 | 98 | 98 |
| Weight | Without brake | kg | | Approx. 0.7 | Approx. 1.3 | Approx. 1.8 | Approx. 0.7 | Approx. 1.3 | Approx. 1.8 |
| | With brake | kg | | Approx. 0.9 | Approx. 2 | Approx. 2.5 | Approx. 0.9 | Approx. 2 | Approx. 2.5 |
| Radiation shield dimensions (material) | | | | 130 × 120 × t10 (Al) | 170 × 160 × t12 (Al) | | 130 × 120 × t10 (Al) | 170 × 160 × t12 (Al) | |
| Applicable Servo Drives (R88D-) | | | | GT01L | GT02L | GT04L | GT01H | GT02H | GT04H |
| Brake specifications | Brake inertia | kg·m² (GD²/4) | | $3 \times 10^{-6}$ | $9 \times 10^{-6}$ | | $3 \times 10^{-6}$ | $9 \times 10^{-6}$ | |
| | Excitation voltage *4 | V | | 24 VDC ±10% | | | | | |
| | Power consumption (at 20°C) | W | | 7 | 10 | | 7 | 10 | |
| | Current consumption (at 20°C) | A | | 0.29 | 0.41 | | 0.29 | 0.41 | |
| | Static friction torque | N·m | | 0.29 min. | | | 0.29 min. | 1.27 min. | |
| | Attraction time *5 | ms | | 50 max. | | | 50 max. | 60 max. | |
| | Release time *5 | ms | | 15 max. | | | | | |
| | Backlash | | | ±1° | | | | | |
| | Allowable work per braking | J | | 137 | 196 | | 137 | 196 | |
| | Allowable total work | J | | $44.1 \times 10^3$ | $147 \times 10^3$ | | $44.1 \times 10^3$ | $147 \times 10^3$ | |
| | Allowable angular acceleration | rad/s² | | 10,000 max. (Speed of 900 r/min or more must not be changed in less than 10 ms) | | | | | |
| | Brake life | --- | | 10,000,000 operations min. | | | | | |
| | Rating | --- | | Continuous | | | Continuous | | |
| | Insulation grade | --- | | Type F | | | | | |

*1. These are the values when the Servomotor is combined with a Servo Drive at room temperature (20°C, 65%). The maximum momentary torque shown above indicates the standard value.

*2. Applicable Load Inertia:
- The operable load inertia ratio (load inertia/rotor inertia) depends on the mechanical configuration and its rigidity. For a machine with high rigidity, operation is possible even with high load inertia. Select an appropriate motor and confirm that operation is possible.
- If the dynamic brake is activated frequently with high load inertia, the dynamic brake resistor may burn. Do not repeatedly turn the Servomotor ON and OFF while the dynamic brake is enabled.
- The dynamic brake is designed only for emergency stops. Design the system so that the Servomotor remains stopped for at least 3 minutes after applying the dynamic brake. Otherwise the dynamic brake circuits may fail.

*3. The allowable radial and thrust loads are the values determined for a service life of 20,000 hours at normal operating temperatures. The allowable radial loads are applied as shown in the following diagram.

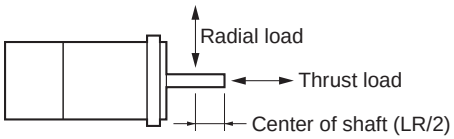


*4. This is an OFF brake. (It is reset when excitation voltage is applied).

*5. The operation time is the value (reference value) measured with a surge suppressor (CR50500 manufactured by Okaya Electric Industries Co., Ltd.).

## Torque and Rotation Speed Characteristics

### 3,000-r/min Flat Servomotors

- **3,000-r/min Servomotors with 100-VAC Power Input**

The following graphs show the characteristics with a 3-m standard cable and a 100-VAC input.

**R88M-GP10030L/S (100 W)**

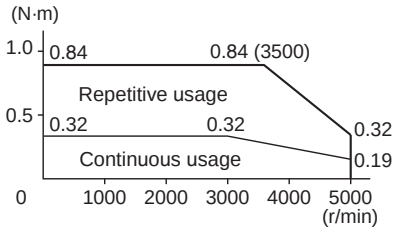


**R88M-GP20030L/S (200 W)**

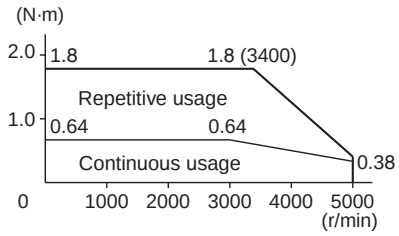


**R88M-GP40030L/S (400 W)**

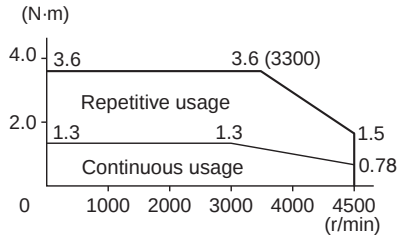


- **3,000-r/min Servomotors with 200-VAC Power Input**

The following graphs show the characteristics with a 3-m standard cable and a 200-VAC input.

**R88M-GP10030H/T (100 W)**

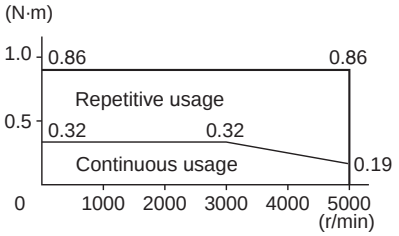


**R88M-GP20030H/T (200 W)**

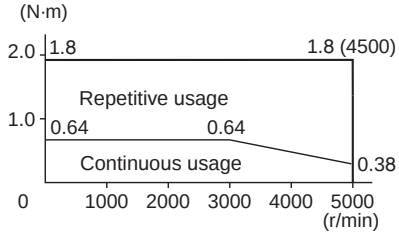


**R88M-GP40030H/T (400 W)**

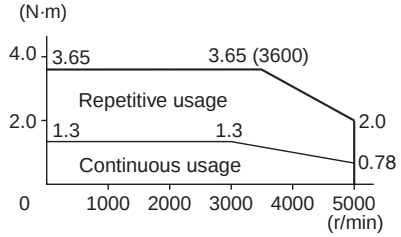

# Servomotor Specifications (R88M-G)

## ● Characteristics

### 2,000-r/min Cylindrical Servomotors
### 200-VAC Input Power

| Item | | Model (R88M-) / Unit | G1K020T | G1K520T | G2K020T | G3K020T | G4K020T | G5K020T | G7K515T |
|---|---|---|---|---|---|---|---|---|---|
| Rated output *1 | | W | 1000 | 1500 | 2000 | 3000 | 4000 | 5000 | 7500 |
| Rated torque *1 | | N·m | 4.8 | 7.15 | 9.54 | 14.3 | 18.8 | 23.8 | 48 |
| Rated rotation speed | | r/min | 2000 | | | | | | 1500 |
| Max. momentary rotation speed | | r/min | 3000 | | | | | | 2000 |
| Max. momentary torque *1 | | N·m | 13.5 | 19.6 | 26.5 | 41.2 | 54.9 | 70.6 | 111 |
| Rated current *1 | | A (rms) | 5.6 | 9.4 | 12.3 | 17.8 | 23.4 | 28 | 46.6 |
| Max. momentary current *1 | | A (rms) | 17.1 | 28.5 | 37.1 | 54.2 | 71.4 | 85.7 | 117.8 |
| Rotor inertia | | kg·m² (GD²/4) | $6.17 \times 10^{-4}$ | $1.12 \times 10^{-3}$ | $1.52 \times 10^{-3}$ | $2.23 \times 10^{-3}$ | $4.25 \times 10^{-3}$ | $6.07 \times 10^{-3}$ | $8.9 \times 10^{-3}$ |
| Applicable load inertia | | – | 10 times the rotor inertia max. *2 | | | | | | |
| Torque constant *1 | | N·m/A | 0.88 | 0.76 | 0.78 | 0.81 | 0.81 | 0.85 | 1.03 |
| Power rate *1 | | kW/s | 37.3 | 45.8 | 60 | 91.6 | 83.2 | 93.5 | 230 |
| Mechanical time constant | | ms | 0.7 | 0.81 | 0.75 | 0.72 | 1 | 0.9 | 0.71 |
| Electrical time constant | | ms | 18 | 19 | 21 | 20 | 24 | 32 | 34 |
| Allowable radial load *3 | | N | 490 | 490 | 490 | 784 | 784 | 784 | 1176 |
| Allowable thrust load *3 | | N | 196 | 196 | 196 | 343 | 343 | 343 | 490 |
| Weight | Without brake | kg | Approx. 6.8 | Approx. 8.5 | Approx. 10.6 | Approx. 14.6 | Approx. 18.8 | Approx. 25 | Approx. 41 |
| | With brake | kg | Approx. 8.7 | Approx. 10.1 | Approx. 12.5 | Approx. 16.5 | Approx. 21.3 | Approx. 28.5 | Approx. 45 |
| Radiation shield dimensions (material) | | | 275 × 260 × t15 (Al) | | | 380 × 350 × t30 (Al) | 470 × 440 × t30 (Al) | | |
| Applicable Servo Drives (R88D-) | | | GT10H | GT15H | GT20H | GT30H | GT50H | GT50H | GT75H |
| Brake specifications | Brake inertia | kg·m² (GD²/4) | $1.35 \times 10^{-4}$ | | | | $4.25 \times 10^{-4}$ | $4.7 \times 10^{-4}$ | $4.7 \times 10^{-4}$ |
| | Excitation voltage *4 | V | 24 VDC ±10% | | | | | | |
| | Power consumption (at 20°C) | W | 14 | 19 | 19 | 22 | 26 | 31 | 34 |
| | Current consumption (at 20°C) | A | 0.59 | 0.79 | 0.79 | 0.9 | 1.1 | 1.3 | 1.4 |
| | Static friction torque | N·m | 4.9 min. | 13.7 min. | 13.7 min. | 16.1 min. | 21.5 min. | 24.5 min. | 58.8 min. |
| | Attraction time *5 | ms | 80 max. | 100 max. | 100 max. | 110 max. | 90 max. | 80 max. | 150 max. |
| | Release time *5 | ms | 70 max. | 50 max. | 50 max. | 50 max. | 35 min. | 25 min. | 50 max. |
| | Backlash | | ±1° | | | | | | |
| | Allowable work per braking | J | 588 | 1176 | 1176 | 1170 | 1078 | 1372 | 1372 |
| | Allowable total work | J | $7.8 \times 10^5$ | $1.5 \times 10^6$ | $1.5 \times 10^6$ | $2.2 \times 10^6$ | $2.5 \times 10^6$ | $2.9 \times 10^6$ | $2.9 \times 10^6$ |
| | Allowable angular acceleration | rad/s² | 10,000 max. (Speed of 900 r/min or more must not be changed in less than 10 ms) | | | | | | |
| | Brake life | – | 10,000,000 operations min. | | | | | | |
| | Rating | – | Continuous | | | | | | |
| | Insulation grade | – | Type F | | | | | | |

*1. These are the values when the Servomotor is combined with a Servo Drive at room temperature (20°C, 65%). The maximum momentary torque shown above indicates the standard value.

*2. Applicable Load Inertia:
- The operable load inertia ratio (load inertia/rotor inertia) depends on the mechanical configuration and its rigidity. For a machine with high rigidity, operation is possible even with high load inertia. Select an appropriate motor and confirm that operation is possible.
- If the dynamic brake is activated frequently with high load inertia, the dynamic brake resistor may burn. Do not repeatedly turn the Servomotor ON and OFF while the dynamic brake is enabled.
- The dynamic brake is designed only for emergency stops. Design the system so that the Servomotor remains stopped for at least 3 minutes after applying the dynamic brake. Otherwise the dynamic brake circuits may fail.

*3. The allowable radial and thrust loads are the values determined for a service life of 20,000 hours at normal operating temperatures. The allowable radial loads are applied as shown in the following diagram.

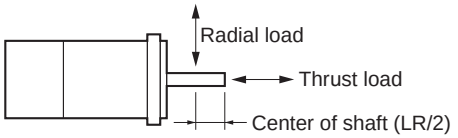


*4. This is an OFF brake. (It is reset when excitation voltage is applied).

*5. The operation time is the value (reference value) measured with a surge suppressor (CR50500 manufactured by Okaya Electric Industries Co., Ltd.).

## Torque and Rotation Speed Characteristics

### 2,000-r/min Cylindrical Servomotors

- **2,000-r/min Servomotors with 200-VAC Power Input**

The following graphs show the characteristics with a 3-m standard cable and a 200-VAC input.

**R88M-G1K020T (1 kW)**

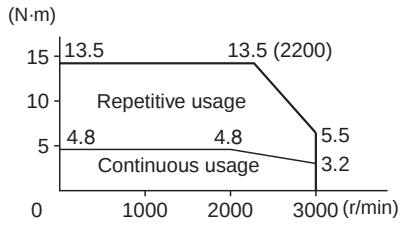


**R88M-G1K520T (1.5 kW)**

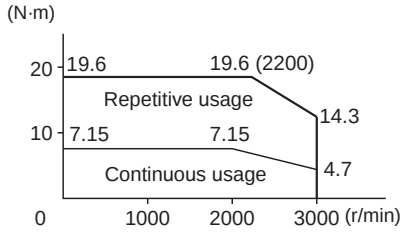


**R88M-G2K020T (2 kW)**

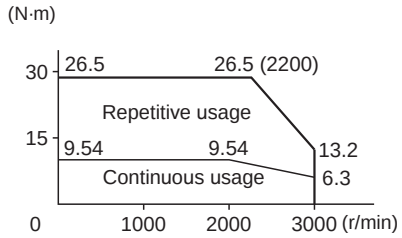


**R88M-G3K020T (3 kW)**

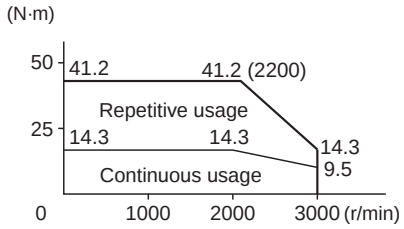


**R88M-G4K020T (4 kW)**

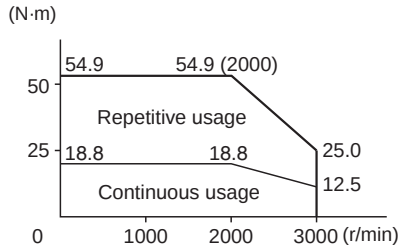


**R88M-G5K020T (5 kW)**

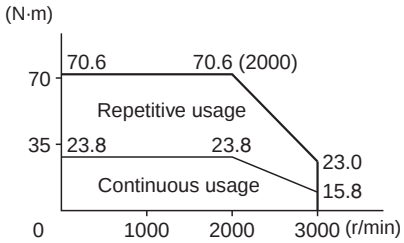


**R88M-G7K515T (7.5 kW)**

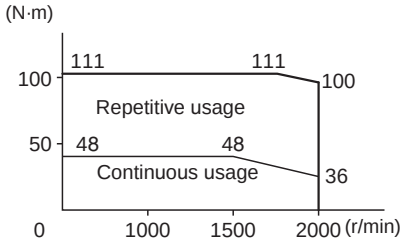

# Servomotor Specifications (R88M-G)

## ● Characteristics

### 1,000-r/min Cylindrical Servomotors
### 200-VAC Input Power

| Item | | Model (R88M-) / Unit | G90010T | G2K010T | G3K010T | G4K510T | G6K010T |
|---|---|---|---|---|---|---|---|
| Rated output *1 | | W | 900 | 2000 | 3000 | 4500 | 6000 |
| Rated torque *1 | | N·m | 8.62 | 19.1 | 28.4 | 42.9 | 57.2 |
| Rated rotation speed | | r/min | 1000 | | | | |
| Max. momentary rotation speed | | r/min | 2000 | | | | |
| Max. momentary torque *1 | | N·m | 18.4 | 41.5 | 60 | 101 | 130 |
| Rated current *1 | | A (rms) | 7.6 | 18.5 | 24 | 33 | 57.2 |
| Max. momentary current *1 | | A (rms) | 17.1 | 44 | 57.1 | 84.2 | 121.4 |
| Rotor inertia | | kg·m² (GD²/4) | $1.12 \times 10^{-3}$ | $3.55 \times 10^{-3}$ | $5.57 \times 10^{-3}$ | $8.09 \times 10^{-3}$ | $9.9 \times 10^{-3}$ |
| Applicable load inertia | | — | 10 times the rotor inertia max. *2 | | | | |
| Torque constant *1 | | N·m/A | 1.13 | 1 | 1.1 | 1.3 | 1.22 |
| Power rate *1 | | kW/s | 66.3 | 103 | 145 | 228 | 331 |
| Mechanical time constant | | ms | 0.88 | 0.97 | 0.74 | 0.7 | 0.65 |
| Electrical time constant | | ms | 20 | 25 | 30 | 31 | 46.2 |
| Allowable radial load *3 | | N | 686 | 1176 | 1470 | 1470 | 1764 |
| Allowable thrust load *3 | | N | 196 | 490 | 490 | 490 | 588 |
| Weight | Without brake | kg | Approx. 8.5 | Approx. 17.5 | Approx. 25 | Approx. 34 | Approx. 41 |
| | With brake | kg | Approx. 10 | Approx. 21 | Approx. 28.5 | Approx. 39.5 | Approx. 45 |
| Radiation shield dimensions (material) | | | 275 × 260 × t15 (Al) | 470 × 440 × t30 (Al) | | | |
| Applicable Servo Drives (R88D-) | | | GT15H | GT30H | GT50H | GT50H | GT75H |
| Brake specifications | Brake inertia | kg·m² (GD²/4) | $1.35 \times 10^{-4}$ | $4.7 \times 10^{-4}$ | $4.7 \times 10^{-4}$ | $4.7 \times 10^{-4}$ | $4.7 \times 10^{-4}$ |
| | Excitation voltage *4 | V | 24 VDC ±10% | | | | |
| | Power consumption (at 20°C) | W | 19 | 31 | 34 | | |
| | Current consumption (at 20°C) | A | 0.79 | 1.3 | 1.4 | | |
| | Static friction torque | N·m | 13.7 min. | 24.5 min. | 58.8 min. | | |
| | Attraction time *5 | ms | 100 max. | 80 max. | 150 max. | | |
| | Release time *5 | ms | 50 max. | 25 max. | 50 max. | | |
| | Backlash | | ±1° | | | | |
| | Allowable work per braking | J | 1176 | 1372 | | | |
| | Allowable total work | J | $1.6 \times 10^6$ | $2.9 \times 10^6$ | | | |
| | Allowable angular acceleration | rad/s² | 10,000 max. (Speed of 900 r/min or more must not be changed in less than 10 ms) | | | | |
| | Brake life | --- | 10,000,000 operations min. | | | | |
| | Rating | --- | Continuous | | | | |
| | Insulation grade | --- | Type F | | | | |

*1. These are the values when the Servomotor is combined with a Servo Drive at room temperature (20°C, 65%). The maximum momentary torque shown above indicates the standard value.

*2. Applicable Load Inertia:
- The operable load inertia ratio (load inertia/rotor inertia) depends on the mechanical configuration and its rigidity. For a machine with high rigidity, operation is possible even with high load inertia. Select an appropriate motor and confirm that operation is possible.
- If the dynamic brake is activated frequently with high load inertia, the dynamic brake resistor may burn. Do not repeatedly turn the Servomotor ON and OFF while the dynamic brake is enabled.
- The dynamic brake is designed only for emergency stops. Design the system so that the Servomotor remains stopped for at least 3 minutes after applying the dynamic brake. Otherwise the dynamic brake circuits may fail.

*3. The allowable radial and thrust loads are the values determined for a service life of 20,000 hours at normal operating temperatures. The allowable radial loads are applied as shown in the following diagram.

*4. This is an OFF brake. (It is reset when excitation voltage is applied).

*5. The operation time is the value (reference value) measured with a surge suppressor (CR50500 manufactured by Okaya Electric Industries Co., Ltd.).

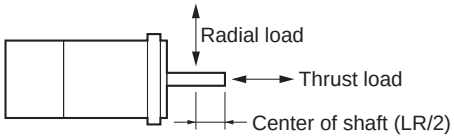

## Torque and Rotation Speed Characteristics

### 1,000-r/min Cylindrical Servomotors

- **1,000-r/min Servomotors with 200-VAC Power Input**

The following graphs show the characteristics with a 3-m standard cable and a 200-VAC input.

**R88M-G90010T (900 W)**

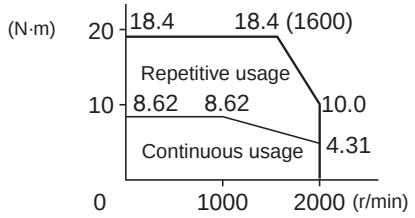


**R88M-G2K010T (2 kW)**

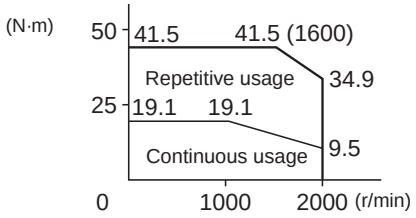


**R88M-G3K010T (3 kW)**

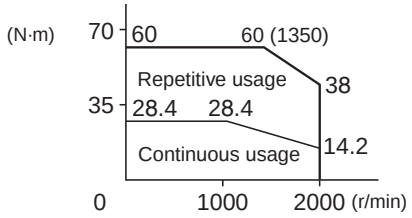


**R88M-G4K510 (4.5 kW)**

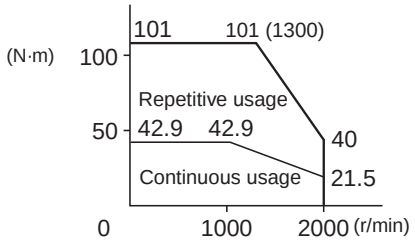


**R88M-G6K010T (6 kW)**

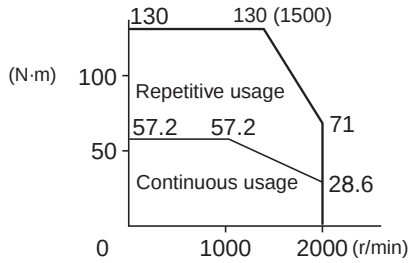

## Decelerator Specifications (R88G-HPG/VRSF)

● **Backlash: 3 Arcminutes Max.**

### Decelerators for 3,000-r/min Servomotors

| Model | | | Rated rotation speed | Rated torque | Efficiency | Maximum momentary rotation speed | Maximum momentary torque | Decelerator inertia | Allowable radial load | Allowable thrust load | Weight |
|---|---|---|---|---|---|---|---|---|---|---|---|
| | | | r/min | N·m | % | r/min | N·m | kg·m² | N | N | kg |
| 50 W | 1/5 | R88G-HPG11A05100B | 600 | 0.60 | 75 | 1000 | 1.68 | $5.00 \times 10^{-7}$ | 135 | 538 | 0.29 |
| | 1/9 | R88G-HPG11A09050B | 333 | 1.17 | 81 | 555 | 3.29 | $3.00 \times 10^{-7}$ | 161 | 642 | 0.29 |
| | 1/21 | R88G-HPG14A21100B | 143 | 2.18 | 65 | 238 | 6.13 | $5.00 \times 10^{-6}$ | 340 | 1358 | 1.04 |
| | 1/33 | R88G-HPG14A33050B | 91 | 3.73 | 71 | 151 | 10.5 | $4.40 \times 10^{-6}$ | 389 | 1555 | 1.04 |
| | 1/45 | R88G-HPG14A45050B | 67 | 5.09 | 71 | 111 | 14.3 | $4.40 \times 10^{-6}$ | 427 | 1707 | 1.04 |
| 100 W | 1/5 | R88G-HPG11A05100B | 600 | 1.37 | 86 | 1000 | 3.8 | $5.00 \times 10^{-7}$ | 135 | 538 | 0.29 |
| | 1/11 | R88G-HPG14A11100B | 273 | 2.63 | 75 | 454 | 7.39 | $6.00 \times 10^{-6}$ | 280 | 1119 | 1.04 |
| | 1/21 | R88G-HPG14A21100B | 143 | 5.40 | 80 | 238 | 15.2 | $5.00 \times 10^{-6}$ | 340 | 1358 | 1.04 |
| | 1/33 | R88G-HPG20A33100B | 91 | 6.91 | 65 | 151 | 19.4 | $6.50 \times 10^{-5}$ | 916 | 3226 | 2.4 |
| | 1/45 | R88G-HPG20A45100B | 67 | 9.42 | 65 | 111 | 26.5 | $6.50 \times 10^{-5}$ | 1006 | 3541 | 2.4 |
| 200 W | 1/5 | R88G-HPG14A05200B | 600 | 2.49 | 78 | 1000 | 6.93 | $2.07 \times 10^{-5}$ | 221 | 883 | 1.02 |
| | 1/11 | R88G-HPG14A11200B | 273 | 6.01 | 85 | 454 | 16.7 | $1.93 \times 10^{-5}$ | 280 | 1119 | 1.09 |
| | 1/21 | R88G-HPG20A21200B | 143 | 10.2 | 76 | 238 | 28.5 | $4.90 \times 10^{-5}$ | 800 | 2817 | 2.9 |
| | 1/33 | R88G-HPG20A33200B | 91 | 17.0 | 81 | 151 | 47.4 | $4.50 \times 10^{-5}$ | 916 | 3226 | 2.9 |
| | 1/45 | R88G-HPG20A45200B | 67 | 23.2 | 81 | 111 | 64.6 | $4.50 \times 10^{-5}$ | 1006 | 3541 | 2.9 |
| 400 W | 1/5 | R88G-HPG14A05400B | 600 | 5.66 | 87 | 1000 | 16.0 (15.7) | $2.07 \times 10^{-5}$ | 221 | 883 | 1.09 |
| | 1/11 | R88G-HPG20A11400B | 273 | 11.7 | 82 | 454 | 33.1 (32.5) | $5.70 \times 10^{-5}$ | 659 | 2320 | 2.9 |
| | 1/21 | R88G-HPG20A21400B | 143 | 23.5 | 86 | 238 | 66.5 (65.2) | $4.90 \times 10^{-5}$ | 800 | 2547 | 2.9 |
| | 1/33 | R88G-HPG32A33400B | 91 | 34.7 | 81 | 151 | 98.2 (96.3) | $6.20 \times 10^{-5}$ | 1565 | 6240 | 7.5 |
| | 1/45 | R88G-HPG32A45400B | 67 | 47.4 | 81 | 111 | 133.9 (131.4) | $6.10 \times 10^{-5}$ | 1718 | 6848 | 7.5 |
| 750 W | 1/5 | R88G-HPG20A05750B | 600 | 9.94 | 83 | 1000 | 29.2 | $6.80 \times 10^{-5}$ | 520 | 1832 | 2.9 |
| | 1/11 | R88G-HPG20A11750B | 273 | 23.2 | 88 | 454 | 68.1 | $6.00 \times 10^{-5}$ | 659 | 2320 | 3.1 |
| | 1/21 | R88G-HPG32A21750B | 143 | 42.3 | 84 | 238 | 124.3 | $3.00 \times 10^{-4}$ | 1367 | 5448 | 7.8 |
| | 1/33 | R88G-HPG32A33750B | 91 | 69.7 | 88 | 151 | 204.7 | $2.70 \times 10^{-4}$ | 1565 | 6240 | 7.8 |
| | 1/45 | R88G-HPG32A45750B | 67 | 95.0 | 88 | 111 | 279.2 | $2.70 \times 10^{-4}$ | 1718 | 6848 | 7.8 |
| 1 kW | 1/5 | R88G-HPG32A051K0B | 600 | 11.5 | 72 | 1000 | 32.9 | $3.90 \times 10^{-4}$ | 889 | 3542 | 7.3 |
| | 1/11 | R88G-HPG32A111K0B | 273 | 28.9 | 83 | 454 | 82.6 | $3.40 \times 10^{-4}$ | 1126 | 4488 | 7.8 |
| | 1/21 | R88G-HPG32A211K0B | 143 | 58.1 | 87 | 238 | 166.1 | $3.00 \times 10^{-4}$ | 1367 | 5488 | 7.8 |
| | 1/33 | R88G-HPG32A331K0B | 91 | 94.3 | 90 | 151 | 270.0 | $2.80 \times 10^{-4}$ | 1565 | 6240 | 7.8 |
| | 1/45 | R88G-HPG50A451K0B | 67 | 124.2 | 87 | 100*1 | 355.4 | $4.70 \times 10^{-4}$ | 4538 | 15694 | 19.0 |
| 1.5 kW | 1/5 | R88G-HPG32A052K0B | 600 | 19.1 | 80 | 1000 | 51.3 | $3.90 \times 10^{-4}$ | 889 | 3542 | 7.4 |
| | 1/11 | R88G-HPG32A112K0B | 273 | 45.7 | 87 | 454 | 122.5 | $3.40 \times 10^{-4}$ | 1126 | 4488 | 7.9 |
| | 1/21 | R88G-HPG32A211K5B | 143 | 90.1 | 90 | 238 | 241.9 | $3.00 \times 10^{-4}$ | 1367 | 5448 | 7.9 |
| | 1/33 | R88G-HPG50A332K0B | 91 | 141.5 | 90 | 136*1 | 379.7 | $4.80 \times 10^{-4}$ | 4135 | 14300 | 19.0 |
| | 1/45 | R88G-HPG50A451K5B | 67 | 192.9 | 90 | 100*1 | 517.8 | $4.70 \times 10^{-4}$ | 4538 | 15694 | 19.0 |
| 2 kW | 1/5 | R88G-HPG32A052K0B | 600 | 26.7 | 84 | 1000 | 77.4 | $3.90 \times 10^{-4}$ | 889 | 3542 | 7.4 |
| | 1/11 | R88G-HPG32A112K0B | 273 | 62.4 | 89 | 454 | 180.7 | $3.40 \times 10^{-4}$ | 1126 | 4488 | 7.9 |
| | 1/21 | R88G-HPG50A212K0B | 143 | 118.9 | 89 | 214*1 | 343.9 | $5.80 \times 10^{-4}$ | 3611 | 12486 | 19.0 |
| | 1/33 | R88G-HPG50A332K0B | 91 | 191.8 | 91 | 136*1 | 555.0 | $4.80 \times 10^{-4}$ | 4135 | 14300 | 19.0 |
| 3 kW | 1/5 | R88G-HPG32A053K0B | 600 | 42.0 | 88 | 1000 | 118.9 | $3.80 \times 10^{-4}$ | 889 | 3542 | 7.3 |
| | 1/11 | R88G-HPG50A113K0B | 273 | 92.3 | 88 | 409*1 | 261.4 | $7.70 \times 10^{-4}$ | 2974 | 10285 | 19.0 |
| | 1/21 | R88G-HPG50A213K0B | 143 | 183.0 | 91 | 214*1 | 517.7 | $5.80 \times 10^{-4}$ | 3611 | 12486 | 19.0 |
| 4 kW | 1/5 | R88G-HPG32A054K0B | 600 | 53.9 | 90 | 900*1 | 163.4 | $3.80 \times 10^{-4}$ | 889 | 3542 | 7.9 |
| | 1/11 | R88G-HPG50A115K0B | 273 | 124.6 | 90 | 409*1 | 359.0 | $8.80 \times 10^{-4}$ | 2974 | 10285 | 19.1 |
| 5 kW | 1/5 | R88G-HPG50A055K0B | 600 | 69.3 | 88 | 900*1 | 197.8 | $1.20 \times 10^{-3}$ | 2347 | 8118 | 17.7 |
| | 1/11 | R88G-HPG50A115K0B | 273 | 158.4 | 91 | 409*1 | 451.9 | $8.80 \times 10^{-4}$ | 2974 | 10285 | 19.1 |

**Note: 1.** The values inside parentheses ( ) are for 100-V Servomotors.
**Note: 2.** The Decelerator inertia is the Servomotor shaft conversion value.
**Note: 3.** The protective structure for Servomotors with Decelerators satisfies IP44.
**Note: 4.** The allowable radial load is the value at the T/2 position.
**Note: 5.** The standard models have a straight shaft. Models with a key and tap are indicated by adding "J" to the end of the model number (the suffix in the box).

## Decelerators for 3,000-r/min Flat Servomotors

| Model | | | Rated rotation speed | Rated torque | Efficiency | Maximum momentary rotation speed | Maximum momentary torque | Decelerator inertia | Allowable radial load | Allowable thrust load | Weight |
|---|---|---|---|---|---|---|---|---|---|---|---|
| | | | r/min | N·m | % | r/min | N·m | kg·m² | N | N | kg |
| 100 W | 1/5 | R88G-HPG11A05100PB | 600 | 1.37 | 85 | 1000 | 3.67 (3.59) | $5.00 \times 10^{-7}$ | 135 | 538 | 0.34 |
| | 1/11 | R88G-HPG14A11100PB | 273 | 2.63 | 75 | 454 | 7.06 (6.89) | $6.00 \times 10^{-6}$ | 280 | 1119 | 1.04 |
| | 1/21 | R88G-HPG14A21100PB | 143 | 5.40 | 80 | 238 | 14.5 (14.2) | $5.00 \times 10^{-6}$ | 340 | 1358 | 1.04 |
| | 1/33 | R88G-HPG20A33100PB | 91 | 6.91 | 65 | 151 | 18.6 (18.1) | $4.50 \times 10^{-5}$ | 916 | 3226 | 2.9 |
| | 1/45 | R88G-HPG20A45100PB | 67 | 9.42 | 65 | 111 | 25.3 (24.7) | $4.50 \times 10^{-5}$ | 1006 | 3541 | 2.9 |
| 200 W | 1/5 | R88G-HPG14A05200PB | 600 | 2.49 | 78 | 1000 | 7.01 | $2.07 \times 10^{-5}$ | 221 | 883 | 0.99 |
| | 1/11 | R88G-HPG20A11200PB | 273 | 4.75 | 68 | 454 | 13.4 | $5.80 \times 10^{-5}$ | 659 | 2320 | 3.1 |
| | 1/21 | R88G-HPG20A21200PB | 143 | 10.2 | 76 | 238 | 28.8 | $4.90 \times 10^{-5}$ | 800 | 2817 | 3.1 |
| | 1/33 | R88G-HPG20A33200PB | 91 | 17.0 | 81 | 151 | 47.9 | $4.50 \times 10^{-5}$ | 916 | 3226 | 3.1 |
| | 1/45 | R88G-HPG20A45200PB | 67 | 23.2 | 81 | 111 | 65.4 | $4.50 \times 10^{-5}$ | 1006 | 3541 | 3.1 |
| 400 W | 1/5 | R88G-HPG20A05400PB | 600 | 4.67 | 72 | 1000 (900) | 13.1 (12.9) | $7.10 \times 10^{-5}$ | 520 | 1832 | 3.1 |
| | 1/11 | R88G-HPG20A11400PB | 273 | 11.7 | 82 | 454 (409) | 32.9 (32.4) | $5.80 \times 10^{-5}$ | 659 | 2320 | 3.1 |
| | 1/21 | R88G-HPG20A21400PB | 143 | 23.5 | 86 | 238 (214) | 66.2 (65.2) | $4.90 \times 10^{-5}$ | 800 | 2817 | 3.1 |
| | 1/33 | R88G-HPG32A33400PB | 91 | 34.7 | 81 | 151 (136) | 97.6 (96.2) | $2.80 \times 10^{-4}$ | 1565 | 6240 | 7.8 |
| | 1/45 | R88G-HPG32A45400PB | 67 | 47.4 | 81 | 111 (100) | 133.0 (131.2) | $2.80 \times 10^{-4}$ | 1718 | 6848 | 7.8 |

**Note: 1.** The values inside parentheses ( ) are for 100-V Servomotors.
**Note: 2.** The Decelerator inertia is the Servomotor shaft conversion value.
**Note: 3.** The protective structure for Servomotors with Decelerators satisfies IP44.
**Note: 4.** The allowable radial load is the value at the T/2 position.
**Note: 5.** The standard models have a straight shaft. Models with a key and tap are indicated by adding "J" to the end of the model number (the suffix in the box).

## Decelerators for 2,000-r/min Servomotors

| Model | | | Rated rotation speed | Rated torque | Efficiency | Maximum momentary rotation speed | Maximum momentary torque | Decelerator inertia | Allowable radial load | Allowable thrust load | Weight |
|---|---|---|---|---|---|---|---|---|---|---|---|
| | | | r/min | N·m | % | r/min | N·m | kg·m² | N | N | kg |
| 1 kW | 1/5 | R88G-HPG32A053K0B | 400 | 20.4 | 85 | 600 | 57.4 | $3.80 \times 10^{-4}$ | 889 | 3542 | 7.3 |
| | 1/11 | R88G-HPG32A112K0SB | 182 | 47.3 | 90 | 273 | 133.1 | $3.40 \times 10^{-4}$ | 1126 | 4488 | 7.8 |
| | 1/21 | R88G-HPG32A211K0SB | 95 | 92.3 | 92 | 143 | 259.7 | $2.90 \times 10^{-4}$ | 1367 | 5448 | 7.8 |
| | 1/33 | R88G-HPG50A332K0SB | 60 | 144.9 | 92 | 91 | 407.6 | $4.70 \times 10^{-4}$ | 4135 | 14300 | 19.0 |
| | 1/45 | R88G-HPG50A451K0SB | 44 | 197.7 | 92 | 67 | 555.9 | $4.70 \times 10^{-4}$ | 4538 | 15694 | 19.0 |
| 1.5 kW | 1/5 | R88G-HPG32A053K0B | 400 | 31.7 | 89 | 600 | 86.8 | $3.80 \times 10^{-4}$ | 889 | 3542 | 7.3 |
| | 1/11 | R88G-HPG32A112K0SB | 182 | 72.1 | 92 | 273 | 197.7 | $3.40 \times 10^{-4}$ | 1126 | 4488 | 7.8 |
| | 1/21 | R88G-HPG50A213K0B | 95 | 137.5 | 92 | 143 | 377.0 | $5.80 \times 10^{-4}$ | 3611 | 12486 | 19.0 |
| | 1/33 | R88G-HPG50A332K0SB | 60 | 219.4 | 93 | 91 | 601.5 | $4.70 \times 10^{-4}$ | 4135 | 14300 | 19.0 |
| 2 kW | 1/5 | R88G-HPG32A053K0B | 400 | 43.2 | 91 | 600 | 119.9 | $3.80 \times 10^{-4}$ | 889 | 3542 | 7.3 |
| | 1/11 | R88G-HPG32A112K0SB | 182 | 97.4 | 93 | 273 | 270.5 | $3.40 \times 10^{-4}$ | 1126 | 4488 | 7.8 |
| | 1/21 | R88G-HPG50A213K0B | 95 | 185.6 | 93 | 143 | 515.9 | $5.80 \times 10^{-4}$ | 3611 | 12486 | 19.0 |
| | 1/33 | R88G-HPG50A332K0SB | 60 | 270.0*1 | 93 | 91 | 815.0 | $4.70 \times 10^{-4}$ | 4135 | 14300 | 19.0 |
| 3 kW | 1/5 | R88G-HPG32A054K0B | 400 | 66.0 | 92 | 600 | 190.1 | $3.80 \times 10^{-4}$ | 889 | 3542 | 7.9 |
| | 1/11 | R88G-HPG50A115K0B | 182 | 145.2 | 92 | 273 | 418.3 | $8.80 \times 10^{-4}$ | 2974 | 10285 | 19.1 |
| | 1/21 | R88G-HPG50A213K0SB | 95 | 260.0*1 | 93 | 143 | 806.4 | $6.90 \times 10^{-4}$ | 3611 | 12486 | 19.1 |
| | 1/25 | R88G-HPG65A253K0SB | 80 | 322.9 | 90 | 120 | 930.1 | $3.00 \times 10^{-3}$ | 7846 | 28654 | 52.0 |
| 4 kW | 1/5 | R88G-HPG50A054K0SB | 400 | 85.8 | 91 | 600 | 250.3 | $1.20 \times 10^{-3}$ | 2347 | 8118 | 18.6 |
| | 1/11 | R88G-HPG50A114K0SB | 182 | 192.7 | 93 | 273 | 562.8 | $8.70 \times 10^{-4}$ | 2974 | 10285 | 20.1 |
| | 1/20 | R88G-HPG65A204K0SB | 100 | 342.2 | 91 | 150 | 999.2 | $3.28 \times 10^{-3}$ | 7338 | 26799 | 52.0 |
| | 1/25 | R88G-HPG65A254K0SB | 80 | 430.9 | 92 | 120 | 1258.6 | $3.24 \times 10^{-3}$ | 7846 | 28654 | 52.0 |
| 5 kW | 1/5 | R88G-HPG50A055K0SB | 400 | 109.8 | 92 | 600 | 325.5 | $1.10 \times 10^{-3}$ | 2347 | 8118 | 22.0 |
| | 1/11 | R88G-HPG50A115K0SB | 182 | 200.0*1 | 93 | 273 | 723.8 | $8.40 \times 10^{-4}$ | 2974 | 10285 | 23.5 |
| | 1/20 | R88G-HPG65A205K0SB | 100 | 438.2 | 92 | 150 | 1300.5 | $2.85 \times 10^{-3}$ | 7338 | 26799 | 55.4 |
| | 1/25 | R88G-HPG65A255K0SB | 80 | 550.9 | 93 | 120 | 1634.4 | $2.81 \times 10^{-3}$ | 7846 | 28654 | 55.4 |
| 7.5 kW | 1/5 | R88G-HPG65A057K5SB | 300 | 221.1 | 92 | 400 | 511.2 | $2.07 \times 10^{-2}$ | 4841 | 17681 | 48.0 |
| | 1/12 | R88G-HPG65A127K5SB | 125 | 540.8 | 94 | 166 | 1250.7 | $2.02 \times 10^{-2}$ | 6295 | 22991 | 52.0 |

*1. "Rated torque" indicates the allowable rated torque for the decelerator. Do not exceed this value.

**Note: 1.** The Decelerator inertia is the Servomotor shaft conversion value.
**Note: 2.** The protective structure for Servomotors with Decelerators satisfies IP44.
**Note: 3.** The allowable radial load is the value at the T/2 position.
**Note: 4.** The standard models have a straight shaft. Models with a key and tap are indicated with "J" at the end of the model number (the suffix in the box).

## Decelerators for 1,000-r/min Servomotors

| Model | | | Rated rotation speed | Rated torque | Efficiency | Maximum momentary rotation speed | Maximum momentary torque | Decelerator inertia | Allowable radial load | Allowable thrust load | Weight |
|---|---|---|---|---|---|---|---|---|---|---|---|
| | | | r/min | N·m | % | r/min | N·m | kg·m² | N | N | kg |
| 900 W | 1/5 | R88G-HPG32A05900TB | 200 | 39.9 | 93 | 400 | 85.2 | $3.80 \times 10^{-4}$ | 889 | 3542 | 7.9 |
| | 1/11 | R88G-HPG32A11900TB | 90 | 89.0 | 94 | 182 | 190.1 | $3.40 \times 10^{-4}$ | 1126 | 4488 | 8.4 |
| | 1/21 | R88G-HPG50A21900TB | 47 | 169.8 | 94 | 95 | 362.4 | $7.00 \times 10^{-4}$ | 3611 | 12486 | 19.1 |
| | 1/33 | R88G-HPG50A33900TB | 30 | 268.5 | 94 | 60 | 573.2 | $5.90 \times 10^{-4}$ | 4135 | 14300 | 19.1 |
| 2 kW | 1/5 | R88G-HPG32A052K0TB | 200 | 90.2 | 95 | 400 | 196.1 | $4.90 \times 10^{-4}$ | 889 | 3542 | 8.9 |
| | 1/11 | R88G-HPG50A112K0TB | 90 | 198.4 | 94 | 182 | 430.9 | $8.40 \times 10^{-4}$ | 2974 | 10285 | 20.1 |
| | 1/21 | R88G-HPG50A212K0TB | 47 | 320.0*1 | 95 | 95 | 786.8 | $6.50 \times 10^{-4}$ | 3611 | 12486 | 20.1 |
| | 1/25 | R88G-HPG65A255K0SB | 40 | 446.7 | 94 | 80 | 971.1 | $2.81 \times 10^{-3}$ | 7846 | 28654 | 55.4 |
| 3 kW | 1/5 | R88G-HPG50A055K0SB | 200 | 133.9 | 94 | 400 | 282.9 | $1.10 \times 10^{-3}$ | 2347 | 8118 | 22.0 |
| | 1/11 | R88G-HPG50A115K0SB | 90 | 246.0*1 | 95 | 182 | 684.0 | $8.40 \times 10^{-4}$ | 2974 | 10285 | 23.5 |
| | 1/20 | R88G-HPG65A205K0SB | 50 | 534.7 | 94 | 100 | 1129.2 | $2.85 \times 10^{-3}$ | 7338 | 26799 | 55.4 |
| | 1/25 | R88G-HPG65A255K0SB | 40 | 669.9 | 94 | 80 | 1411.5 | $2.81 \times 10^{-3}$ | 7846 | 28654 | 55.4 |
| 4.5 kW | 1/5 | R88G-HPG50A054K5TB | 200 | 203.5 | 95 | 400 | 479.2 | $1.20 \times 10^{-3}$ | 2347 | 8118 | 22.0 |
| | 1/12 | R88G-HPG65A127K5SB | 83 | 485.6 | 94 | 166 | 1142.9 | $2.02 \times 10^{-2}$ | 6295 | 22991 | 52.0 |
| | 1/20 | R88G-HPG65A204K5TB | 50 | 813.1 | 95 | 100 | 1915.0 | $1.92 \times 10^{-2}$ | 7338 | 26799 | 52.0 |
| 6 kW | 1/5 | R88G-HPG65A057K5SB | 200 | 268.1 | 94 | 400 | 609.7 | $2.07 \times 10^{-2}$ | 4841 | 17681 | 48.0 |
| | 1/12 | R88G-HPG65A127K5SB | 83 | 650.3 | 95 | 166 | 1477.3 | $2.02 \times 10^{-2}$ | 6295 | 22991 | 52.0 |

*1. "Rated torque" indicates the allowable rated torque for the decelerator. Do not exceed this value.

**Note: 1.** The Decelerator inertia is the Servomotor shaft conversion value.
**Note: 2.** The protective structure for Servomotors with Decelerators satisfies IP44.
**Note: 3.** The allowable radial load is the value at the T/2 position.
**Note: 4.** The standard models have a straight shaft. Models with a key and tap are indicated with "J" at the end of the model number (the suffix in the box).

● **Backlash: 15 Arcminutes Max.**

### Decelerators for 3,000-r/min Servomotors

| Model | | | Rated rotation speed | Rated torque | Efficiency | Maximum momentary rotation speed | Maximum momentary torque | Decelerator inertia | Allowable radial load | Allowable thrust load | Weight |
|---|---|---|---|---|---|---|---|---|---|---|---|
| | | | r/min | N·m | % | r/min | N·m | kg·m² | N | N | kg |
| 50 W | 1/5 | R88G-VRSF05B100CJ | 600 | 0.52 | 65 | 1000 | 1.46 | $4.00 \times 10^{-6}$ | 392 | 196 | 0.55 |
| | 1/9 | R88G-VRSF09B100CJ | 333 | 0.93 | 65 | 556 | 2.63 | $3.50 \times 10^{-6}$ | 441 | 220 | 0.55 |
| | 1/15 | R88G-VRSF15B100CJ | 200 | 1.67 | 70 | 333 | 4.73 | $3.50 \times 10^{-6}$ | 588 | 294 | 0.70 |
| | 1/25 | R88G-VRSF25B100CJ | 120 | 2.78 | 70 | 200 | 7.88 | $3.25 \times 10^{-6}$ | 686 | 343 | 0.70 |
| 100 W | 1/5 | R88G-VRSF05B100CJ | 600 | 1.19 | 75 | 1000 | 3.38 | $4.00 \times 10^{-6}$ | 392 | 196 | 0.55 |
| | 1/9 | R88G-VRSF09B100CJ | 333 | 2.29 | 80 | 556 | 6.48 | $3.50 \times 10^{-6}$ | 441 | 220 | 0.55 |
| | 1/15 | R88G-VRSF15B100CJ | 200 | 3.81 | 80 | 333 | 10.8 | $3.50 \times 10^{-6}$ | 588 | 294 | 0.70 |
| | 1/25 | R88G-VRSF25B100CJ | 120 | 6.36 | 80 | 200 | 18.0 | $3.25 \times 10^{-6}$ | 686 | 343 | 0.70 |
| 200 W | 1/5 | R88G-VRSF05B200CJ | 600 | 2.70 | 85 | 1000 | 7.57 | $1.18 \times 10^{-5}$ | 392 | 196 | 0.72 |
| | 1/9 | R88G-VRSF09C200CJ | 333 | 3.77 | 66 | 556 | 10.6 | $2.75 \times 10^{-5}$ | 931 | 465 | 1.70 |
| | 1/15 | R88G-VRSF15C200CJ | 200 | 6.29 | 66 | 333 | 17.6 | $3.00 \times 10^{-5}$ | 1176 | 588 | 2.10 |
| | 1/25 | R88G-VRSF25C200CJ | 120 | 11.1 | 70 | 200 | 31.2 | $2.88 \times 10^{-5}$ | 1323 | 661 | 2.10 |
| 400 W | 1/5 | R88G-VRSF05C400CJ | 600 | 5.40 | 85 | 1000 | 15.6 (15.3) | $3.63 \times 10^{-5}$ | 784 | 392 | 1.70 |
| | 1/9 | R88G-VRSF09C400CJ | 333 | 9.50 | 83 | 556 | 27.4 (26.8) | $2.75 \times 10^{-5}$ | 931 | 465 | 1.70 |
| | 1/15 | R88G-VRSF15C400CJ | 200 | 15.8 | 83 | 333 | 45.7 (44.8) | $3.00 \times 10^{-5}$ | 1176 | 588 | 2.10 |
| | 1/25 | R88G-VRSF25C400CJ | 120 | 26.4 | 83 | 200 | 76.1 (74.7) | $2.88 \times 10^{-5}$ | 1323 | 661 | 2.10 |
| 750 W | 1/5 | R88G-VRSF05C750CJ | 600 | 10.7 | 90 | 1000 | 31.7 | $7.13 \times 10^{-5}$ | 784 | 392 | 2.10 |
| | 1/9 | R88G-VRSF09D750CJ | 333 | 18.2 | 85 | 556 | 53.9 | $6.50 \times 10^{-5}$ | 1176 | 588 | 3.40 |
| | 1/15 | R88G-VRSF15D750CJ | 200 | 30.4 | 85 | 333 | 89.9 | $7.00 \times 10^{-5}$ | 1372 | 686 | 3.80 |
| | 1/25 | R88G-VRSF25D750CJ | 120 | 50.7 | 85 | 200 | 149.8 | $6.80 \times 10^{-5}$ | 1617 | 808 | 3.80 |

**Note: 1.** The values inside parentheses ( ) are for 100-V Servomotors.
**Note: 2.** The Decelerator inertia is the Servomotor shaft conversion value.
**Note: 3.** The protective structure for Servomotors with Decelerators satisfies IP44.
**Note: 4.** The allowable radial load is the value at the T/2 position.
**Note: 5.** The standard models have a straight shaft with a key.

### Decelerators for 3,000-r/min Flat Servomotor

| Model | | | Rated rotation speed | Rated torque | Efficiency | Maximum momentary rotation speed | Maximum momentary torque | Decelerator inertia | Allowable radial load | Allowable thrust load | Weight |
|---|---|---|---|---|---|---|---|---|---|---|---|
| | | | r/min | N·m | % | r/min | N·m | kg·m² | N | N | kg |
| 100 W | 1/5 | R88G-VRSF05B100PCJ | 600 | 1.19 | 75 | 1000 | 3.15 | $4.00 \times 10^{-6}$ | 392 | 196 | 0.72 |
| | 1/9 | R88G-VRSF09B100PCJ | 333 | 2.29 | 80 | 556 | 6.048 | $3.50 \times 10^{-6}$ | 441 | 220 | 0.72 |
| | 1/15 | R88G-VRSF15B100PCJ | 200 | 3.81 | 80 | 333 | 10.08 | $3.50 \times 10^{-6}$ | 588 | 294 | 0.87 |
| | 1/25 | R88G-VRSF25B100PCJ | 120 | 6.36 | 80 | 200 | 16.8 | $3.25 \times 10^{-6}$ | 686 | 343 | 0.87 |
| 200 W | 1/5 | R88G-VRSF05B200PCJ | 600 | 2.70 | 85 | 1000 | 7.65 | $1.18 \times 10^{-5}$ | 392 | 196 | 0.85 |
| | 1/9 | R88G-VRSF09C200PCJ | 333 | 3.77 | 66 | 556 | 10.692 | $2.75 \times 10^{-5}$ | 931 | 465 | 1.80 |
| | 1/15 | R88G-VRSF15C200PCJ | 200 | 6.29 | 66 | 333 | 17.82 | $3.00 \times 10^{-5}$ | 1176 | 588 | 2.20 |
| | 1/25 | R88G-VRSF25C200PCJ | 120 | 11.1 | 70 | 200 | 31.5 | $2.88 \times 10^{-5}$ | 1323 | 661 | 2.20 |
| 400 W | 1/5 | R88G-VRSF05C400PCJ | 600 | 5.40 | 85 | 1000 (900) | 15.5 (15.3) | $3.63 \times 10^{-5}$ | 784 | 392 | 1.80 |
| | 1/9 | R88G-VRSF09C400PCJ | 333 | 9.50 | 83 | 556 (500) | 27.3 (26.9) | $2.75 \times 10^{-5}$ | 931 | 465 | 1.80 |
| | 1/15 | R88G-VRSF15C400PCJ | 200 | 15.8 | 83 | 333 (300) | 45.4 (44.8) | $3.00 \times 10^{-5}$ | 1176 | 588 | 2.20 |
| | 1/25 | R88G-VRSF25C400PCJ | 120 | 26.4 | 83 | 200 (180) | 75.7 (74.7) | $2.88 \times 10^{-5}$ | 1323 | 661 | 2.20 |

**Note: 1.** The values inside parentheses ( ) are for 100-V Servomotors.
**Note: 2.** The Decelerator inertia is the Servomotor shaft conversion value.
**Note: 3.** The protective structure for Servomotors with Decelerators satisfies IP44.
**Note: 4.** The allowable radial load is the value at the T/2 position.
**Note: 5.** The standard models have a straight shaft with a key.

# Encoder, External Regeneration Resistors, Reactor and Parameter Unit Specifications

## ● Encoder Specifications

### Incremental Encoders

| Item | Specifications |
|---|---|
| **Encoder system** | Optical encoder |
| **No. of output pulses** | Phases A and B: 2,500 pulses/rotation, Phase Z: 1 pulse/rotation |
| **Power supply voltage** | 5 VDC ±5% |
| **Power supply current** | 180 mA (max.) |
| **Output signals** | +S, –S |
| **Output interface** | RS-485 compliance |

### Absolute Encoders

| Item | Specifications |
|---|---|
| **Encoder system** | Optical encoder |
| | 17 bits |
| **No. of output pulses** | Phases A and B: 32,768 pulses/rotation, Phase Z: 1 pulse/rotation |
| **Maximum rotations** | –32,768 to +32,767 rotations |
| **Power supply voltage** | 5 VDC ±5% |
| **Power supply current** | 110 mA (max.) |
| **Applicable battery voltage** | 3.6 VDC |
| **Current consumption of battery** | 180 µA for a maximum of 5 s right after power interruption<br>100 µA for operation during power interruption<br>3.6 µA when power is supplied to Servo Drive |
| **Output signals** | +S, –S |
| **Output interface** | RS-485 compliance |

## ● External Regeneration Resistors Specifications

| Model | Resistance | Nominal capacity | Regeneration absorption for 120°C temperature rise | Heat radiation condition | Thermal switch output specifications |
|---|---|---|---|---|---|
| **R88A-RR08050S** | 50 Ω | 80 W | 20 W | Aluminum 250 × 250, Thickness: 3.0 | Operating temperature: 150°C±5%, NC contact, Rated output: 30 VDC, 50 mA max. |
| **R88A-RR080100S** | 100 Ω | | | | |
| **R88A-RR22047S1** | 47 Ω | 220 W | 70 W | Aluminum 350 × 350, Thickness: 3.0 | Operating temperature: 170°C±5%, NC contact, Rated output: 3 A |
| **R88A-RR50020S** | 20 Ω | 500 W | 180 W | Aluminum 600 × 600, Thickness: 3.0 | Operating temperature: 200°C±7%, NC contact, Rated output: 250 VAC, 0.2 A max.<br>24 VDC, 0.2 A max. |

## ● Reactor Specifications

| Servo Drive | Reactor | | | | Reactor type |
|---|---|---|---|---|---|
| | Model | Rated current | Inductance | Weight | |
| R88D-GTA5L<br>R88D-GT01H | 3G3AX-DL2002 | 1.6 A | 21.4 mH | Approx. 0.8 kg | Single-phase |
| R88D-GT01L<br>R88D-GT02H | 3G3AX-DL2004 | 3.2 A | 10.7 mH | Approx. 1.0 kg | Single-phase |
| R88D-GT02L<br>R88D-GT04H | 3G3AX-DL2007 | 6.1 A | 6.75 mH | Approx. 1.3 kg | Single-phase |
| R88D-GT04L<br>R88D-GT08H<br>R88D-GT10H | 3G3AX-DL2015 | 9.3 A | 3.51 mH | Approx. 1.6 kg | Single-phase |
| R88D-GT15H | 3G3AX-DL2022 | 13.8 A | 2.51 mH | Approx. 2.1 kg | Single-phase |
| R88D-GT08H<br>R88D-GT10H<br>R88D-GT15H | 3G3AX-AL2025 | 10.0 A | 2.8 mH | Approx. 2.8 kg | Three-phase |
| R88D-GT20H<br>R88D-GT30H | 3G3AX-AL2055 | 20.0 A | 0.88 mH | Approx. 4.0 kg | Three-phase |
| R88D-GT50H | 3G3AX-AL2110 | 34.0 A | 0.35 mH | Approx. 5.0 kg | Three-phase |
| R88D-GT75H | 3G3AX-AL2220 | 67.0 A | 0.18 mH | Approx. 10.0 kg | Three-phase |

## ● R88A-PR02G Parameter Unit Specifications

### General Specifications

| Item | Specifications |
|---|---|
| **Operating ambient temperature**<br>**Operating ambient humidity** | 0 to 55°C<br>90% max. (with no condensation) |
| **Storage ambient temperature**<br>**Storage ambient humidity** | –20 to 80°C<br>90% max. (with no condensation) |
| **Storage and operating atmosphere** | No corrosive gases |
| **Vibration resistance** | 5.9 m/s² max. |

### Performance Specifications

| Item | | Specifications |
|---|---|---|
| **Type** | | Hand-held |
| **Cable length** | | 1.5 m |
| **Connectors** | | Mini DIN 8-pin MD connector |
| **Display** | | 7-segment LED |
| **External dimensions** | | 62 × 114 × 15 mm (W × H × D) |
| **Weight** | | Approx. 0.1 kg (including cable that is provided) |
| **Communications specifications** | **Standard** | RS-232 |
| | **Communications method** | Asynchronous (ASYNC) |
| | **Baud rate** | 9,600 bps |
| | **Start bits** | 1 bit |
| | **Data** | 8 bits |
| | **Parity** | None |
| | **Stop bits** | 1 bit |

## Connections

### ● Control I/O Connector Specifications (CN1)

**Control I/O Signal Connections and External Signal Processing for Position Control**

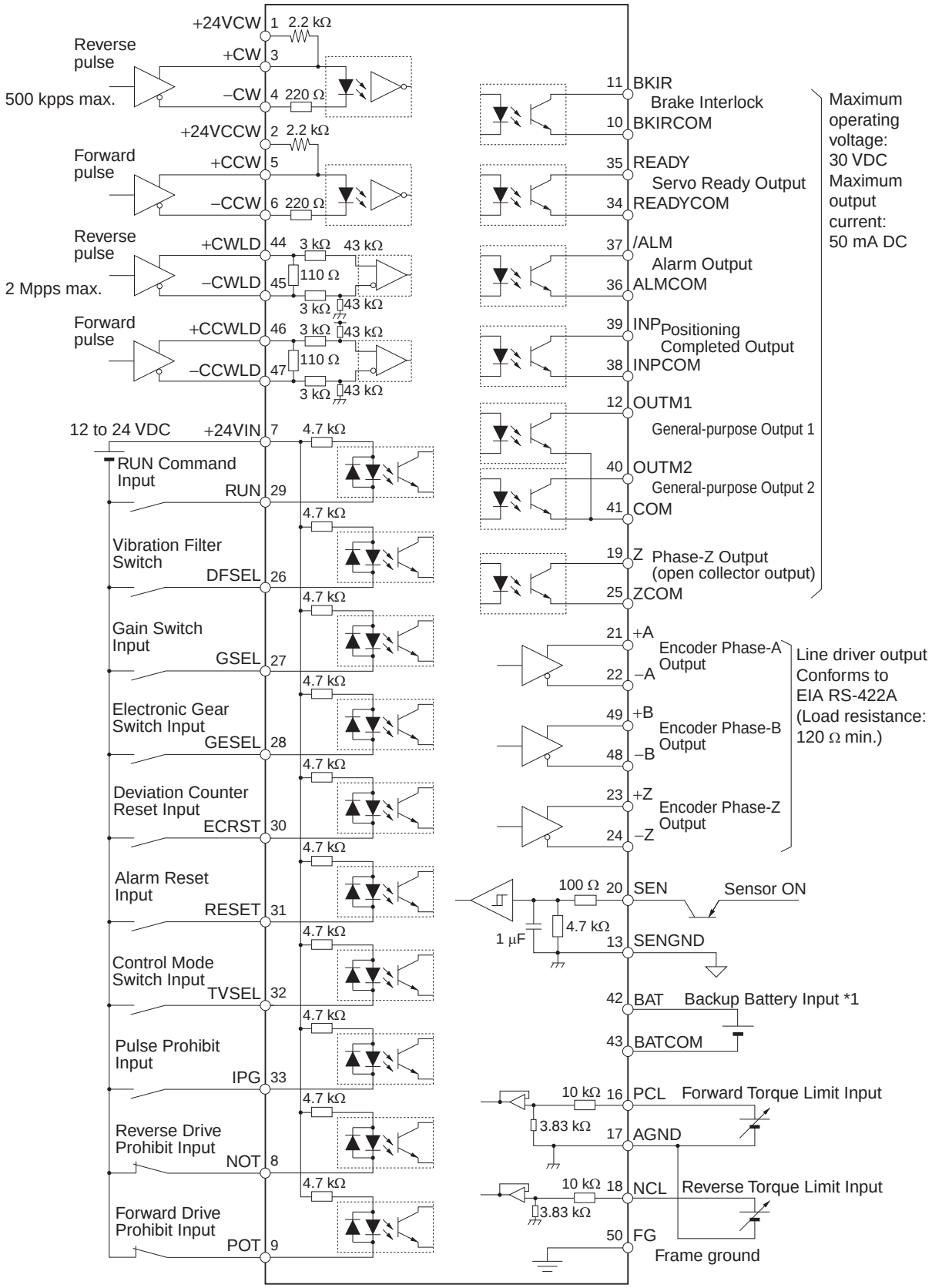


*1. If a backup battery is connected, a cable with a battery is not required.

## Control I/O Signal Connections and External Signal Processing for Speed Control

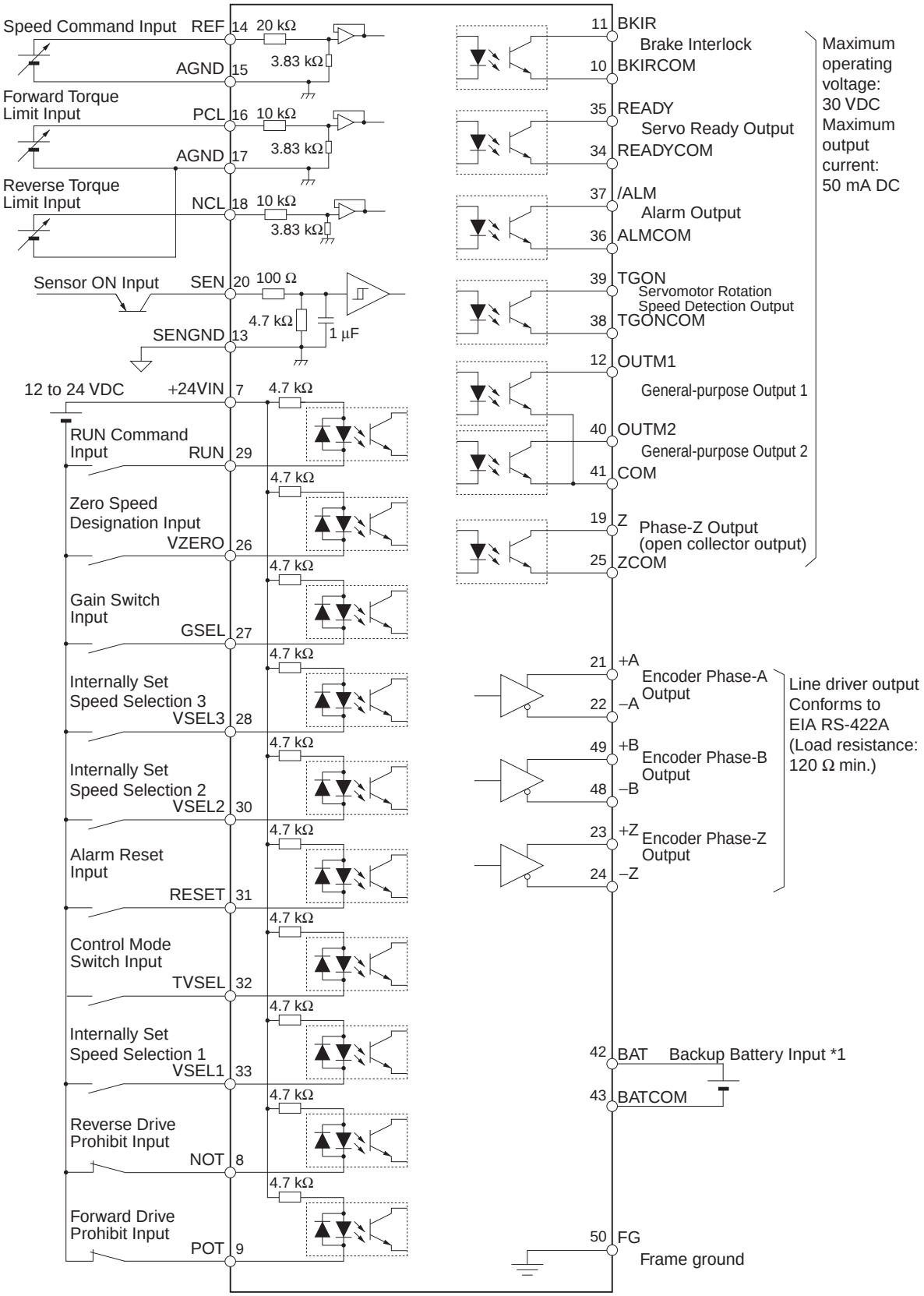


*1. If a backup battery is connected, a cable with a battery is not required.

## Control I/O Signal Connections and External Signal Processing for Torque Control

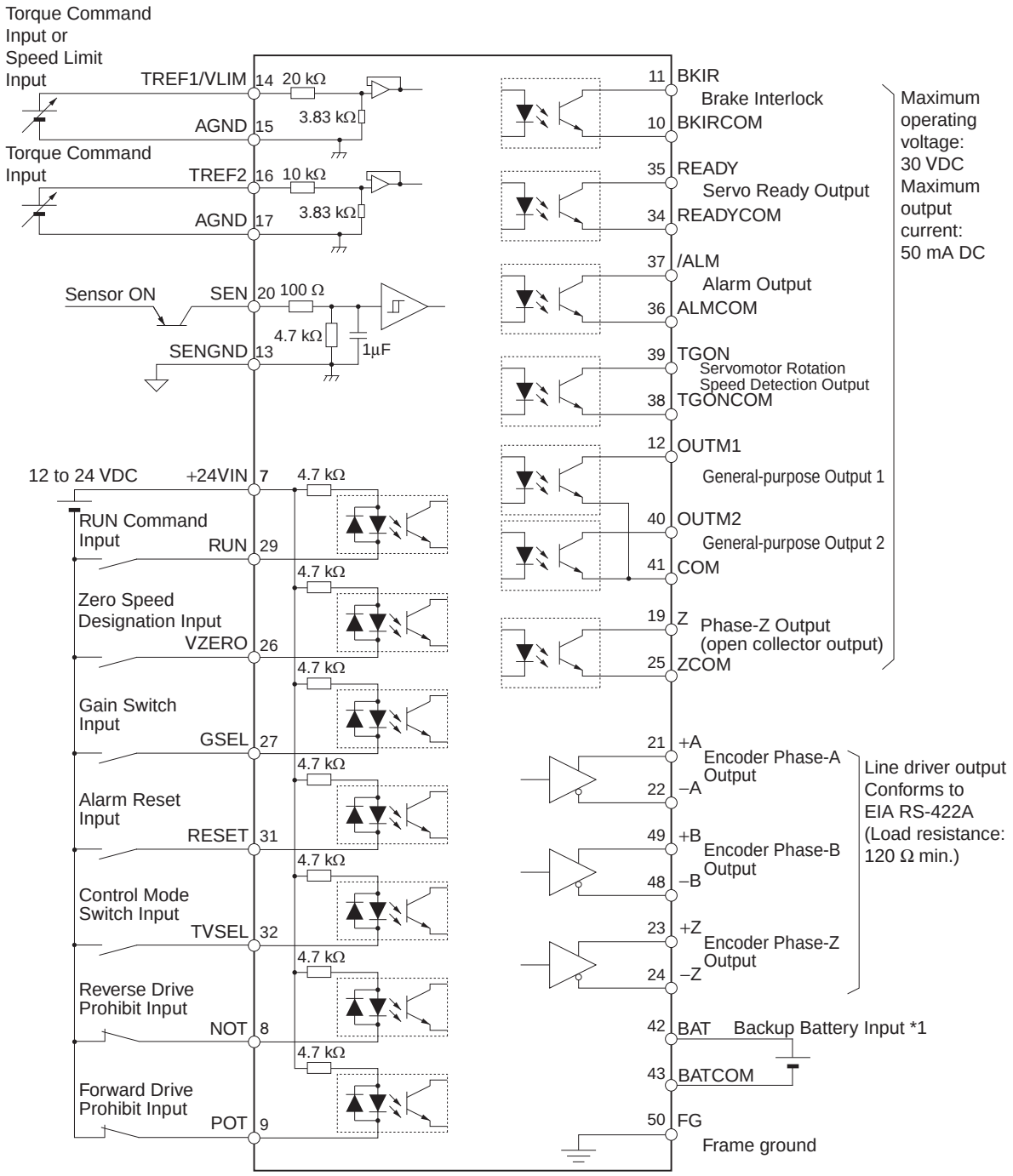


*1. If a backup battery is connected, a cable with a battery is not required.

## ● Peripheral Device Connection Examples

**R88D-GTA5L/-GT01L/-GT02L/-GT04L**

**R88D-GT01H/-GT02H/-GT04H/-GT08H/-GT10H/-GT15H**

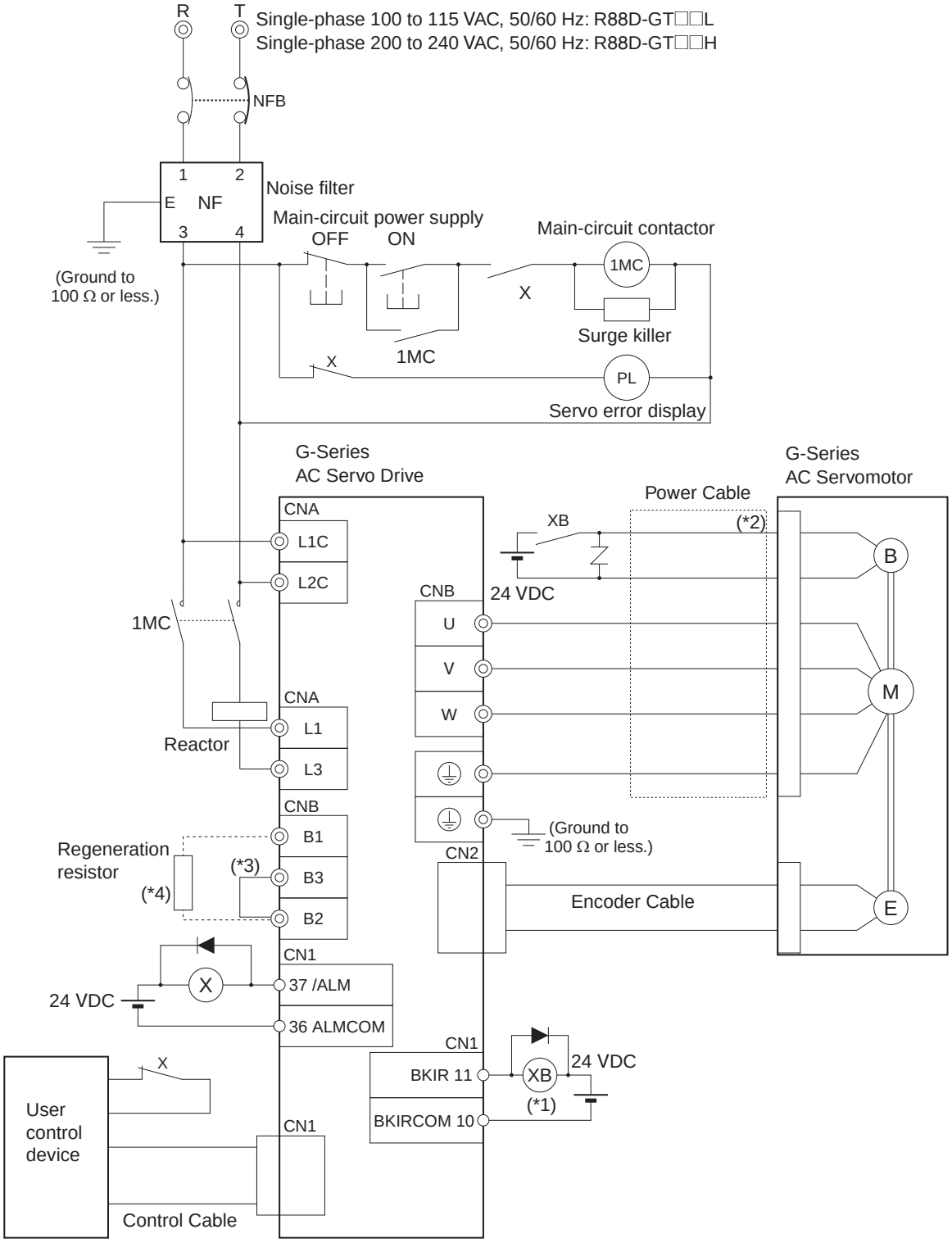


*1. Recommended relay: MY Relay (24 V), by OMRON. For example, the MY2 Relay's rated inductive load is 2 A at 24 VDC and applicable to all G-Series Servomotors with brakes.
*2. The brake is not affected by the polarity of the power supply.
*3. Connect B2-B3 for the models with a built-in regeneration resistor (GT04L, GT08H, GT10H, and GT15H).
If the amount of regeneration is large, disconnect B2-B3 and connect an External Regeneration Resistor to B1-B2.
*4. The models GTA5L to GT02L and GT01H to GT04H do not have a built-in regeneration resistor. If the amount of regeneration is large, an External Regeneration Resistor must be connected to B1-B2.

**R88D-GT08H/-GT10H/-GT15H**

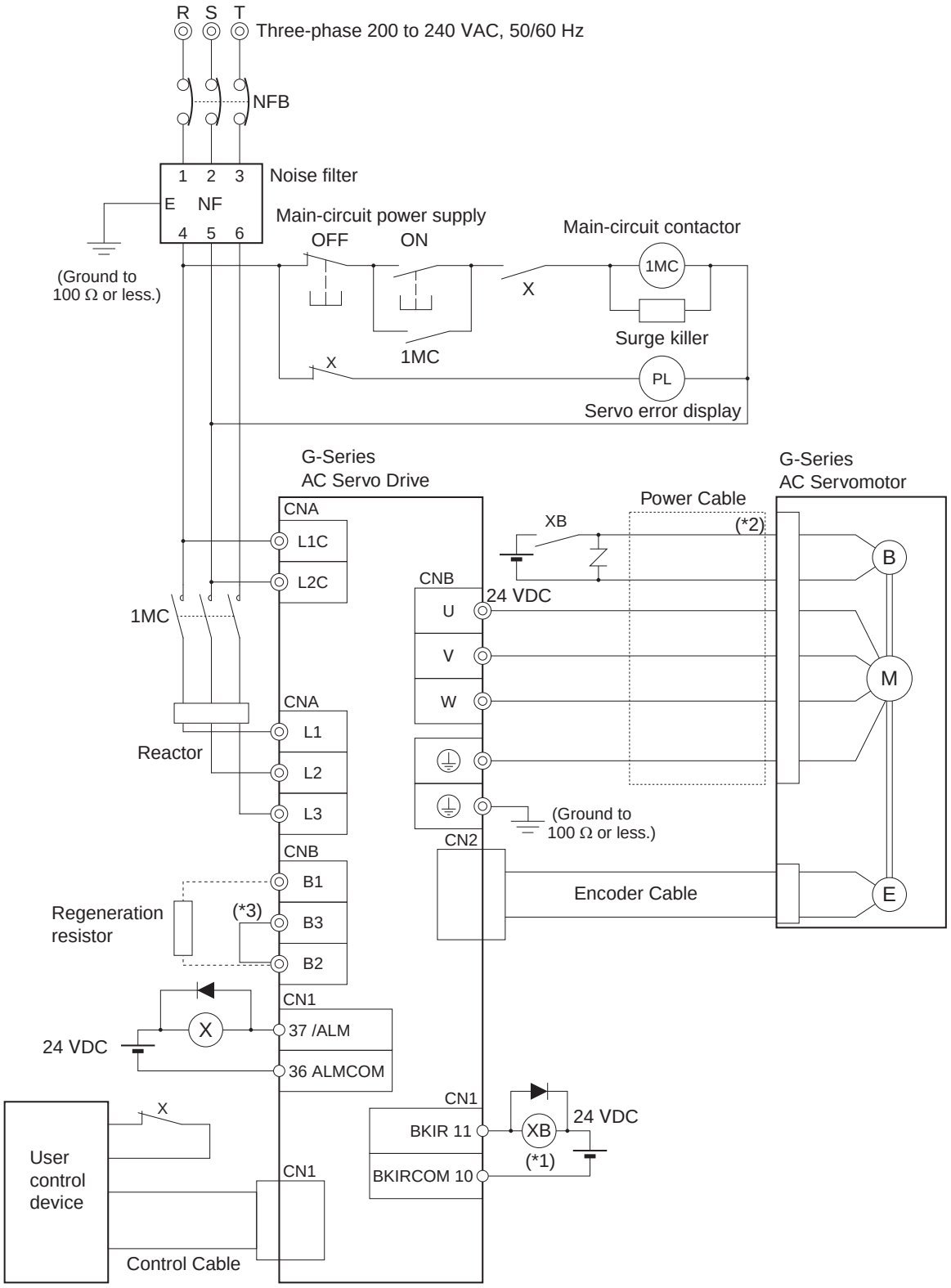


*1. Recommended relay: MY Relay (24 V), by OMRON. For example, the MY2 Relay's rated inductive load is 2 A at 24 VDC and applicable to all G-Series Servomotors with brakes.
*2. The brake is not affected by the polarity of the power supply.
*3. Connect B2-B3 for the models with a built-in regeneration resistor (GT08H to GT15H).
If the amount of regeneration is large, disconnect B2-B3 and connect an External Regeneration Resistor to B1-B2.The brake is not affected by the polarity of the power supply.

**R88D-GT20H/-GT30H/-GT50H**

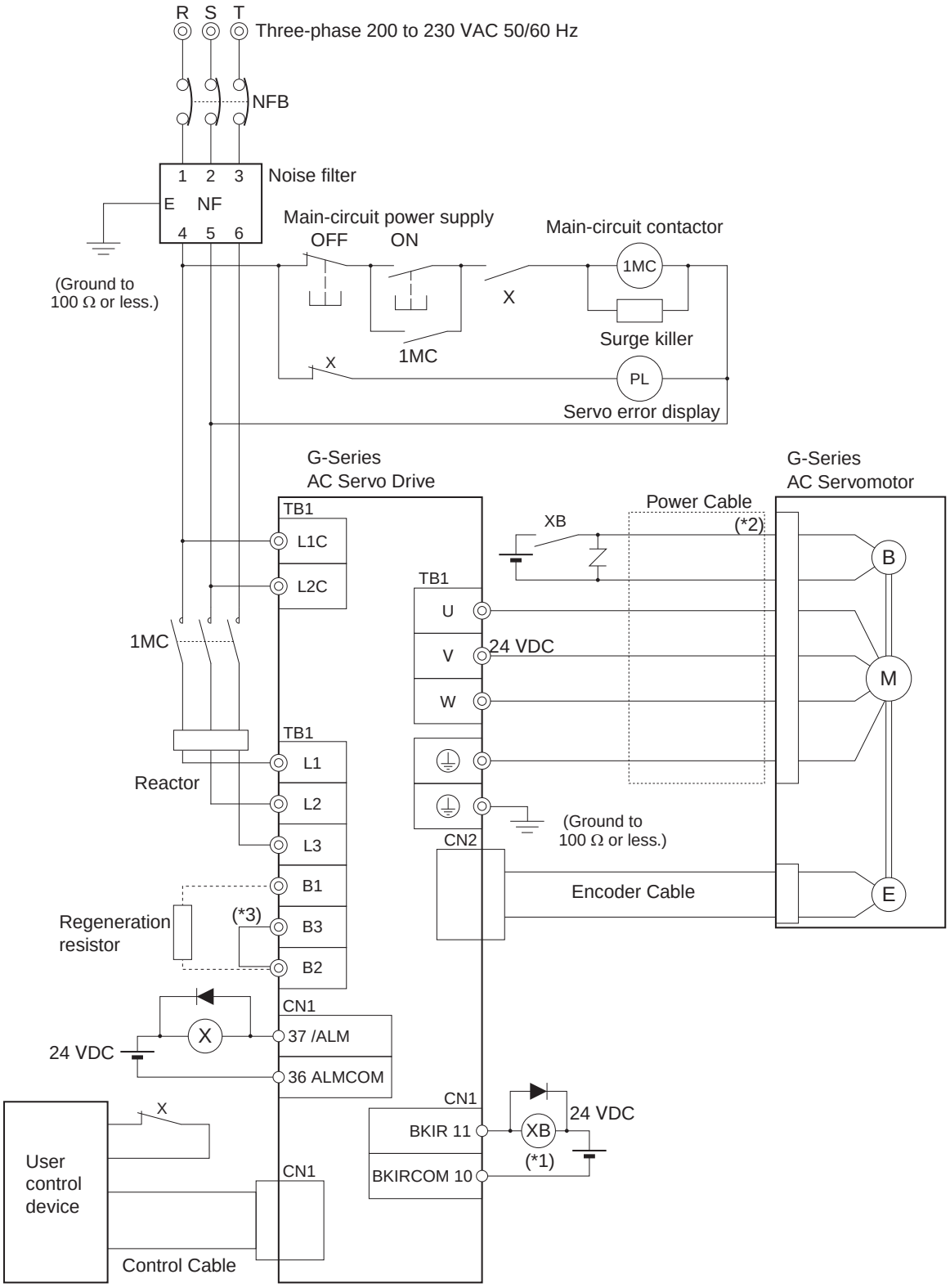


*1. Recommended relay: MY Relay (24 V), by OMRON. For example, the MY2 Relay's rated inductive load is 2 A at 24 VDC and applicable to all G-Series Servomotors with brakes.
*2. The brake is not affected by the polarity of the power supply.
*3. Connect B2-B3 for the models with a built-in regeneration resistor (GT20H to GT50H).
If the amount of regeneration is large, disconnect B2-B3 and connect an External Regeneration Resistor to B1-B2.

**R88D-GT75H**

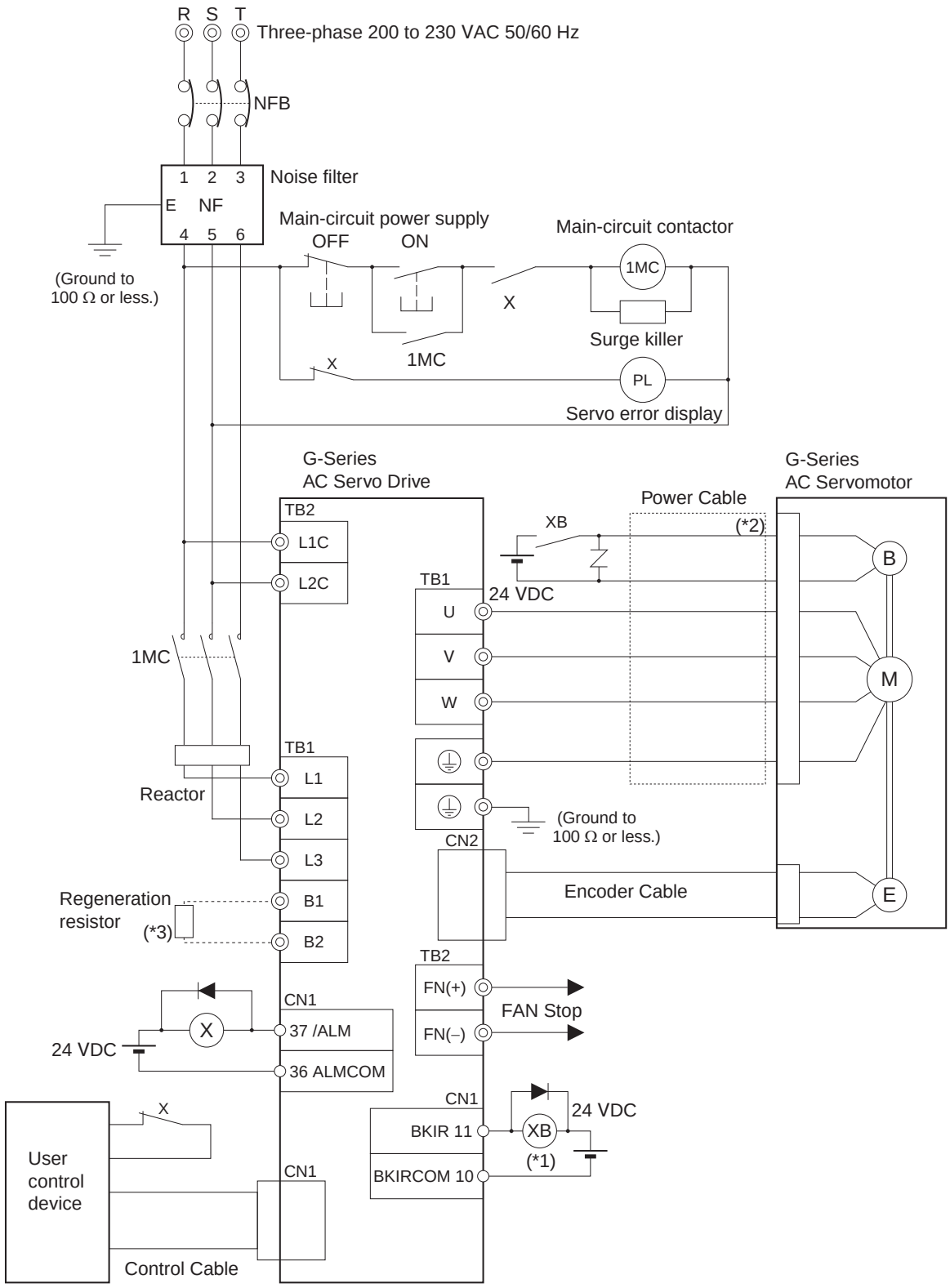


*1. Recommended relay: MY Relay (24 V), by OMRON. For example, the MY2 Relay's rated inductive load is 2 A at 24 VDC and applicable to all G-Series Servomotors with brakes.
*2. The brake is not affected by the polarity of the power supply.
*3. The model GT75H does not have a built-in regeneration resistor.
If the amount of regeneration is large, an External Regeneration Resistor must be connected to B1-B2.

# I/O Circuit Diagrams

## Control Input Circuits

- **Speed Command/Torque Command Input**

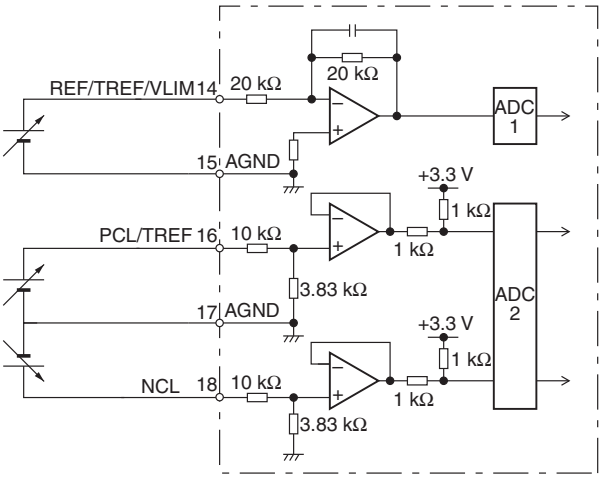


- The maximum allowable input voltage is ±10 V for each input. The VR must be 2 kΩ with B characteristics and 1/2 W minimum. R must be 200 Ω and 1/2 W minimum.

- **Position Command Pulse Input (Photocoupler Input)**
  **Line Driver Input (500 kpps Maximum)**
  **(+CW:3, –CW:4, +CCW:5, –CCW:6)**

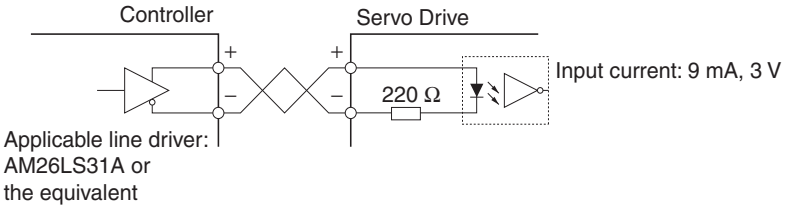


**Open-collector Input**

- External 24-V power supply without a current-limiting resistor (200 kpps maximum)
  (+24VCW: 1, –CW: 4, +24VCCW: 2, –CCW: 6)

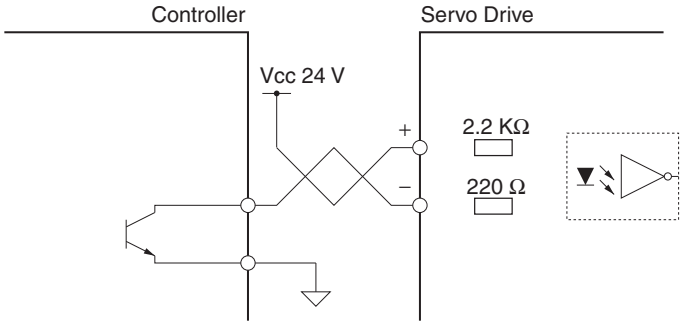


- External control power supply (200 kpps maximum)
  (+CW: 3, –CW: 4, +CCW: 5, –CCW: 6)

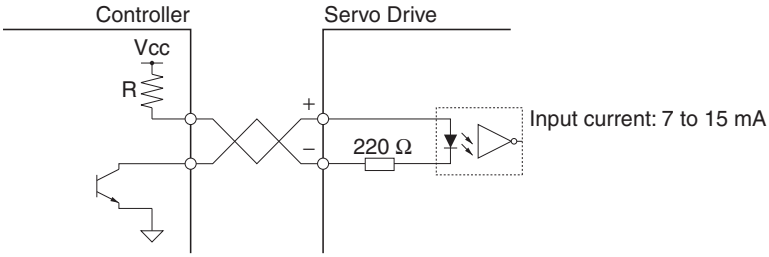


- Select a resistance R value so that the input current will be from 7 to 15 mA. Refer to the following table.

$$\frac{Vcc - 1.5}{R + 220} \fallingdotseq 10mA$$
(7-15mA)

| VCC | R |
|---|---|
| 24 V | 2 kΩ (1/2 W) |
| 12 V | 1 kΩ (1/2 W) |
| 5V | 0Ω (Shorted) |

- **Sequence Input**

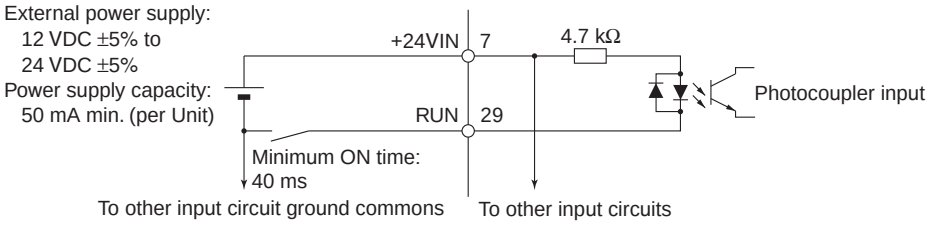


Signal Levels ON level: 10 V min.
OFF level: 3 V max.

- **Sensor Input**

**Sensor ON Input** **ABS**

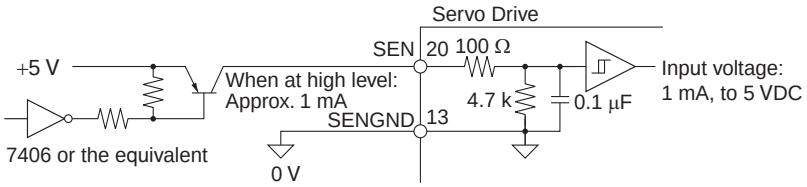


Signal Levels High level: 4 V min.
Low level: 0.8 V max.

- A PNP transistor is recommended.

## Control Output Circuits

- **Position Feedback Output**

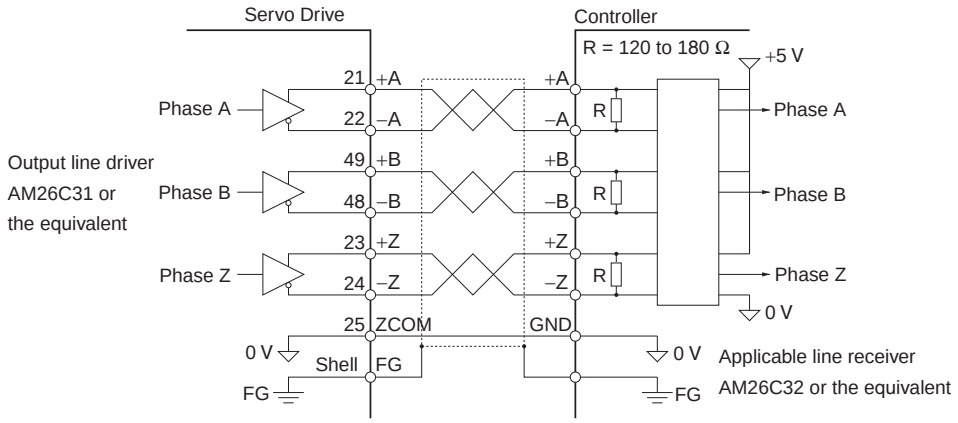


- **Phase-Z Output (Open-collector Output)**

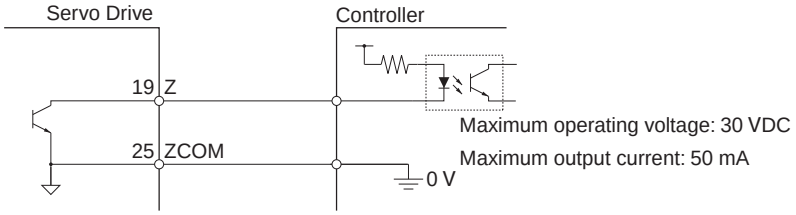


- **Sequence Output**

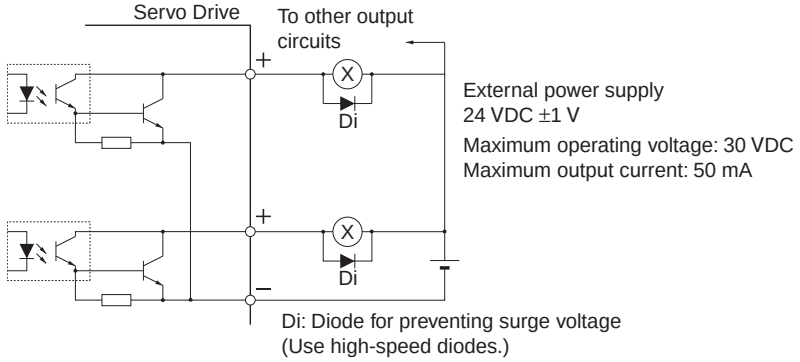

# Components and Functions

## Servo Drive Part Names

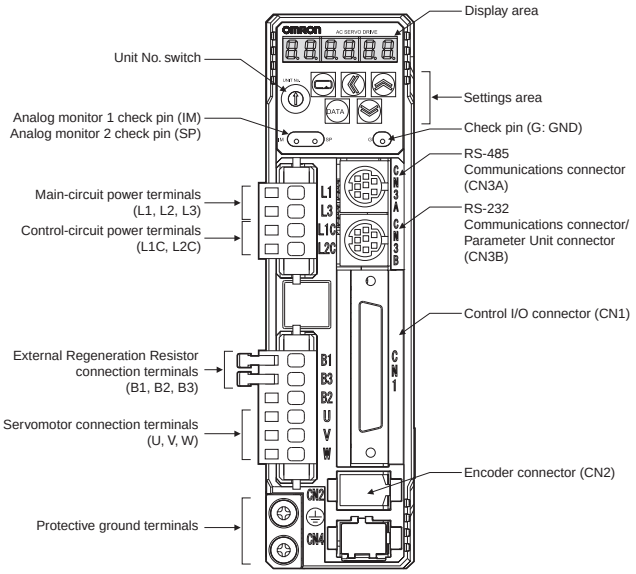


## Main Circuit Connector (CNA)

| Symbol | Name |
|---|---|
| L1 | Main circuits power supply input |
| L2 | |
| L3 | |
| L1C | Control circuit power supply input |
| L2C | |

## Servomotor Connector (CNB)

| Symbol | Name |
|---|---|
| B1 | External Regeneration Resistor connection terminals |
| B2 | |
| B3 | |
| U | Servomotor connection terminals |
| V | |
| W | |
| ⏚ | |
| ⏚ | Frame ground |

## Display Area

A 6-digit 7-segment LED display shows the Servo Drive status, alarm codes, parameters, and other information.

## Check Pins (IM, SP, and G)

The actual motor speed, command speed, torque, and number of accumulated pulses can be measured based on the analog voltage level by using an oscilloscope. The type of signal to output and the output voltage level are set in the SP Selection (Pn07) and IM Selection (Pn08) parameters.

## Unit No. Switch

The Servo Drive number in serial communications is set to a value from 0 to F. This number is used to identify which Servo Drive the computer is accessing in RS-232/485 communications between multiple Servo Drives and a computer.

## CN1 Control Inputs

| Pin No. | Symbol | Name |
|---|---|---|
| 1 | +24VCW | 24-V Open-collector Input for Command Pulse |
| 2 | +24VCCW | 24-V Open-collector Input for Command Pulse |
| 3 | +CW/PULS/FA | Reverse Pulses Input/ Feed Pulses Input, or 90° Phase Difference Pulse Input (Phase A) |
| 4 | –CW/PULS/FA | |
| 5 | +CCW/SIGN/FB | Forward Pulse Input/ Direction Signal, or 90° Phase Difference Pulse Input (Phase B) |
| 6 | –CCW/SIGN/FB | |
| 7 | +24VIN | 12 to 24-VDC Power Supply Input |
| 8 | NOT | Reverse Drive Prohibit Input |
| 9 | POT | Forward Drive Prohibit Input |
| 14 | REF | Speed Command Input |
| | TREF | Torque Command Input |
| | VLIM | Speed Limit Input |
| 15 | AGND | Analog Input Ground |
| 16 | PCL | Forward Torque Limit Input |
| | TREF | Torque Command Input |
| 17 | AGND | Analog Input Ground |
| 18 | NCL | Reverse Torque Limit Input |
| 20 | SEN | Sensor ON Input |
| 13 | SENGND | |
| 26 | VZERO | Zero Speed Designation Input |
| | DFSEL | Vibration Filter Switch |
| | PNSEL | Speed Command Rotation Direction Switch |
| 27 | GSEL | Gain Switch |
| | TLSEL | Torque Limit Switch |
| 28 | GESEL | Electronic Gear Switch |
| | VSEL3 | Internally Set Speed Selection 3 |
| 29 | RUN | RUN Command |
| 30 | ECRST | Deviation Counter Reset Input |
| | VSEL2 | Internally Set Speed Selection 2 |
| 31 | RESET | Alarm Reset Input |
| 32 | TVSEL | Control Mode Switch Input |
| 33 | IPG | Pulse Prohibit Input |
| | VSEL1 | Internally Set Speed Selection 1 |
| 42 | BAT | Backup Battery Input |
| 43 | BATGND | |
| 44 | +CWLD | Reverse Pulse (input for line driver only) |
| 45 | –CWLD | |
| 46 | +CCWLD | Forward Pulse (input for line driver only) |
| 47 | –CCWLD | |

## ● CN1 Control Outputs

| Pin No. | Symbol | Name |
|---|---|---|
| 10 | BKIRCOM | Brake Interlock Output |
| 11 | BKIR | |
| 12 | OUTM1 | General-purpose Output 1 |
| 19 | Z | Phase-Z Output (open collector) |
| 25 | ZCOM | Phase-Z Output (open collector) common |
| 21 | +A | Encoder Phase-A + Output |
| 22 | –A | Encoder Phase-A – Output |
| 48 | –B | Encoder Phase-B – Output |
| 49 | +B | Encoder Phase-B + Output |
| 23 | +Z | Encoder Phase-Z + Output |
| 24 | –Z | Encoder Phase-Z – Output |
| 35 | READY | Servo Ready Output |
| 34 | READYCOM | |
| 37 | /ALM | Alarm Output |
| 36 | ALMCOM | |
| 39 | INP | Positioning Completed Output |
| 38 | INPCOM | |
| 39 | TGON | Servomotor Rotation Speed Detection Output |
| 38 | TGONCOM | |
| 40 | OUTM2 | General-purpose Output 2 |
| 41 | COM | General-purpose Output Common |
| Shell | FG | Frame Ground |

## ● Encoder Connector Specifications (CN2)

| Pin No. | Symbol | Name |
|---|---|---|
| 1 | E5V | Encoder power supply +5 V |
| 2 | E0V | Encoder power supply GND |
| 3 | BAT+ | Battery + |
| 4 | BAT– | Battery – |
| 5 | PS+ | Encoder +phase S input |
| 6 | PS– | Encoder –phaseS input |
| Shell | FG | Shield ground |

## ● Communications Connector Specifications (CN3A)

| Pin No. | Symbol | Name |
|---|---|---|
| 4 | GND | Ground |
| 7 | B+ | RS-485 communications data |
| 8 | A– | |

## ● Parameter Unit Connector Specifications (CN3B)

| Pin No. | Symbol | Name |
|---|---|---|
| 3 | TXD | RS-232 send data |
| 4 | GND | Ground |
| 5 | RXD | RS-232 receive data |
| 7 | B+ | RS-485 communications data |
| 8 | A– | |

## ● Protective Functions

| Error detection | |
|---|---|
| Control power supply undervoltage | |
| Overvoltage | |
| Undervoltage | |
| Overcurrent | |
| Overheating | |
| Overload | |
| Regeneration overload | |
| Encoder communications error | |
| Encoder communications data error | |
| Position deviation exceeded | |
| Overspeed | |
| Command pulse multiplying error | |
| Overrun limit error | |
| EEPROM parameter error | |
| EEPROM check code error | |
| Drive prohibit input | |
| Excessive analog input | |
| Absolute encoder system down error | |
| Absolute encoder counter overflow error | ABS |
| Absolute encoder overspeed error | ABS |
| Absolute encoder one-turn counter error | ABS |
| Absolute encoder multi-turn counter error | ABS |
| Absolute encoder status error | ABS |
| Encoder phase Z error | |
| Encoder PS signal error | |
| PCL input exceeded | |
| NCL input exceeded | |
| Motor automatic recognition error | |
| CPU error | |
| Encoder error | |

# Parameter

## ● R88A-RP02G : Parameter Unit Part Names

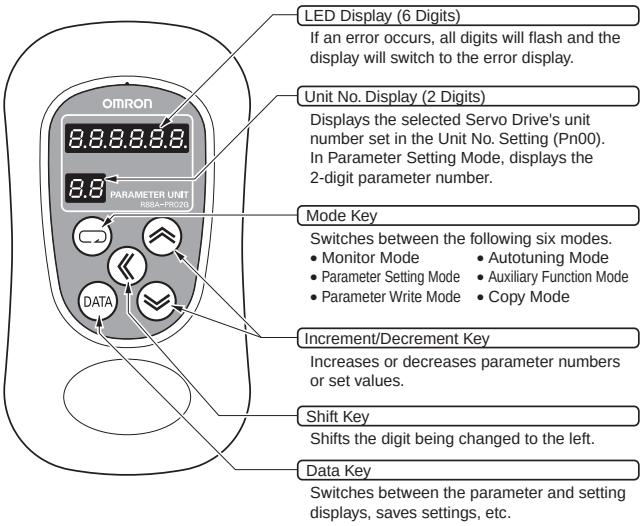


## ● Function Selection Parameters

| Parameter name | Explanation |
|---|---|
| Unit No. Setting | Set the unit number. |
| Default Display | Set the data to display on the Parameter Unit when the power supply is turned ON. |
| Control Mode Selection | Set the control mode to be used. |
| Torque Limit Selection | Set the torque limit method for forward and reverse operation. |
| Drive Prohibit Input Selection | You can stop the Servomotor from rotating beyond the device's travel distance range by setting limit inputs. |
| Command Speed Selection | Select the speed command when using speed control. |
| Zero Speed Designation/ Speed Command Direction Switch | Set the function of the Zero-speed Designation Input (VZERO). |
| SP Selection | Select the relation between the output voltage level and the speed. |
| IM Selection | Select the relation between the output voltage level and the torque or number of pulses. |
| General-purpose Output 2 Selection | Assign the function of General-purpose Output 2 (OUTM2). |
| General-purpose Output 1 Selection | Assign the function of General-purpose Output 1 (OUTM1). |
| Operation Switch When Using Absolute Encoder | Set the operating method for the 17-bit absolute encoder. |
| RS-232 Baud Rate Setting | Select the baud rate for the RS-232 port. |
| RS-485 Baud Rate Setting | Select the baud rate for RS-485 communications. |
| Front Key Protection Setting | Front panel key operation can be limited to Monitor Mode. |

## ● Gain Parameters

| Parameter name | Explanation |
|---|---|
| Position Loop Gain | Set to adjust position control system responsiveness. |
| Speed Loop Gain | Set to adjust speed loop responsiveness. |
| Speed Loop Integration Time Constant | Set to adjust the speed loop integration time constant. |
| Speed Feedback Filter Time Constant | The encoder signal is converted to the speed signal via the low pass filter. |
| Torque Command Filter Time Constant | Set to adjust the primary lag filter time constant for the torque command section. |
| Feed-forward Amount | Set the position control feed-forward compensation value. |
| Feed-forward Command Filter | Set the time constant of the primary lag filter used in the speed feed-forward section. |
| Position Loop Gain 2 | Set to adjust position control system responsiveness. |
| Speed Loop Gain 2 | Set to adjust speed loop responsiveness. |
| Speed Loop Integration Time Constant 2 | Set to adjust the speed loop integration time constant. |
| Speed Feedback Filter Time Constant 2 | The encoder signal is converted to the speed signal via the low pass filter. |
| Torque Command Filter Time Constant 2 | Set to adjust the primary lag filter time constant for the torque command section. |
| Notch Filter 1 Frequency | Set the notch frequency of the resonance suppression notch filter. |
| Notch Filter 1 Width | Set the width to one of five levels for the resonance suppression notch filter. Normally, use the default setting. |
| Inertia Ratio | Set the ratio between the mechanical system inertia and the Servomotor rotor inertia. |
| Realtime Autotuning Mode Selection | Set the operating mode for realtime autotuning. |
| Realtime Autotuning Machine Rigidity Selection | Set the machine rigidity to one of 16 levels during realtime autotuning.<br>The higher the machine rigidity, the greater the setting needs to be.<br>The higher the setting, the higher the responsiveness.<br>When the Parameter Unit is used, 0 cannot be set. |
| Adaptive Filter Selection | Enable or disable the adaptive filter. |
| Vibration Filter Selection | Vibration filters 1 and 2 can be switched. |
| Autotuning Operation Setting | Set the operating pattern for autotuning. |
| Overrun Limit Setting | Set the allowable operating range for the Servomotor. The overrun limit function is disabled if the parameter is set to 0. |
| Instantaneous Speed Observer Setting | Set the instantaneous speed observer. |
| Notch Filter 2 Frequency | Set the notch frequency of the resonance suppression notch filter. |
| Notch Filter 2 Width | Set the notch filter width to one of five levels for the resonance suppression notch filter. Normally, use the default setting. |
| Notch Filter 2 Depth | Set the depth of the resonance suppression notch filter. |
| Vibration Frequency 1 | Set vibration frequency 1to suppress vibration at the end of the load in dampening control. |
| Vibration Filter 1 Setting | Set vibration filter 1 to suppress vibration at the end of the load in dampening control. |
| Vibration Frequency 2 | Set vibration frequency 2 to suppress vibration at the end of the load in dampening control. |
| Vibration Filter 2 Setting | Set vibration filter 2 to suppress vibration at the end of the load in dampening control. |

| Parameter name | Explanation |
|---|---|
| Adaptive Filter Table Number Display | Displays the table entry number corresponding to the frequency for the adaptive filter.<br>This parameter is set automatically and cannot be changed if the adaptive filter is enabled (i.e., if Realtime Autotuning Mode Selection (Pn21) is 1 to 3 or 7). |
| Gain Switching Input Operating Mode Selection | Enable or disable gain switching.<br>If gain switching is enabled, the setting of the Gain Switch Setting (Pn31) is used as the condition for switching between gain 1 and gain 2. |
| Gain Switch 1 Setting | Select the condition for switching between gain 1 and gain 2.<br>The details depend on the control mode. |
| Gain Switch 1 Time | This parameter is enabled when the Gain Switch 1 Setting (Pn31) is 3 to 10. Set the delay time from the moment the condition set in the Gain Switch 1 Setting (Pn31) is not met until returning to gain 1. |
| Gain Switch 1 Level Setting | This parameter is enabled when the Gain Switch 1 Setting (Pn31) is 3 to 6, 9, or 10. Set the judgment level for switching between gain 1 and gain 2.<br>The unit for the setting depends on the condition set in the Gain Switch 1 Setting (Pn31). |
| Gain Switch 1 Hysteresis Setting | Set the hysteresis width above and below the judgment level set in the Gain Switch 1 Level Setting (Pn33). |
| Position Loop Gain Switching Time | When switching between gain 1 and gain 2 is enabled, set the phased switching time only for the position loop gain at gain switching. |
| Gain Switch 2 Setting | Select the condition for switching between gain 1 and gain 2 in speed control mode.<br>The Gain Switching Input Operating Mode Selection (Pn30) must be set to 1 (enabled). |
| Gain Switch 2 Time | This parameter is enabled when Gain Switch 2 Setting (Pn36) is 3 to 5. Set the delay time for returning from gain 2 to gain 1. |
| Gain Switch 2 Level Setting | This parameter is enabled when Gain Switch 2 Setting (Pn36) is 3 to 5. Set the judgment level for switching between gain 1 and gain 2. The unit depends on the setting of Gain Switch 2 Setting (Pn36). |
| Gain Switch 2 Hysteresis Setting | Set the hysteresis width above and below the judgment level set in the Gain Switch 2 Level Setting (Pn38). The unit depends on the setting of the Gain Switch 2 Setting (Pn36). |
| Jog Speed | Set the speed for jogging. |

## ● Position Control Parameters

| Parameter name | Explanation |
|---|---|
| Command Pulse Input Selection | Selects whether to use photocoupler or line-driver-only input for the command pulse input.<br>**Note:** To use a Servo Relay Unit Cable, set this parameter to 0 (photocoupler input). |
| Command Pulse Rotation Direction Switch | Set the Servomotor rotation direction for the command pulse input. |
| Command Pulse Mode | Set the form of the pulse inputs sent as command to the Servo Drive from a position controller. |
| Command Pulse Prohibited Input Setting | Enable or disable the pulse disable input (IPG). |
| Encoder Divider Numerator Setting | Set the number of encoder pulses (+A, –A, –B, +B) output from the Servo Drive for each Servomotor rotation. |
| Encoder Divider Denominator Setting | |
| Encoder Output Direction Switch | Set the B-phase logic for pulse output (–B, +B). |
| Electronic Gear Ratio Numerator 1 | Set the pulse rate for command pulses and Servomotor travel distance. If Pn48 or Pn49 is 0, the encoder resolution is set to a numerator.<br>$\frac{\text{Electronic Gear Ratio Numerator 1 (Pn48) or Electronic Gear Ratio Numerator 2 (Pn49)} \times 2^{\text{Electronic Gear Ratio Numerator Exponent (Pn4A)}}}{\text{Electronic Gear Ratio Denominator (Pn4B)}}$ |
| Electronic Gear Ratio Numerator 2 | |
| Electronic Gear Ratio Numerator Exponent | |
| Electronic Gear Ratio Denominator | |
| Position Command Filter Time Constant Setting | Set the time constant for the primary lag filter for the command pulse input.<br>If the parameter is set to 0, the filter will not function. The larger the setting, the larger the time constant. |
| Smoothing Filter Setting | Select the FIR filter time constant used for the command pulse input.<br>The higher the setting, the smoother the command pulses. |
| Deviation Counter Reset Condition Setting | Set the deviation counter reset conditions. |

## Speed and Torque Control Parameters

| Parameter name | Explanation |
|---|---|
| Speed Command Scale | Set the relation between the voltage applied to the Speed Command Input (REF) and the Servomotor speed. |
| Command Speed Rotation Direction Switch | Set to reverse the polarity of the speed command input (REF). |
| Speed Command Offset Adjustment | Set to adjust the offset of the Speed Command Input (REF). |
| No. 1 Internally Set Speed | Set the No. 1 internally set rotation speed. |
| No. 2 Internally Set Speed | Set the No. 2 internally set rotation speed. |
| No. 3 Internally Set Speed | Set the No. 3 internally set rotation speed. |
| No. 4 Internally Set Speed | Set the No. 4 internally set rotation speed. For torque control (when Pn5B = 0), set the speed limit. |
| No. 5 Internally Set Speed | Set the No. 5 internally set rotation speed. |
| No. 6 Internally Set Speed | Set the No. 6 internally set rotation speed. |
| No. 7 Internally Set Speed | Set the No. 7 internally set rotation speed. |
| No. 8 Internally Set Speed | Set the No. 8 internally set rotation speed. |
| Speed Command Filter Time Constant | Set the primary lag filter time constant in the Speed Command Input (REF: CN1 pin 14). |
| Soft Start Acceleration Time | Set the acceleration time for the speed command. |
| Soft Start Deceleration Time | Set the deceleration time for the speed command. |
| S-curve Acceleration/ Deceleration Time Setting | Set the pseudo-S-curve acceleration/ deceleration value to add to the speed command to enable smooth operation. |
| Torque Command/Speed Limit Selection | Select the input for the torque command and speed limit. |
| Torque Command Scale | Set the relation between the voltage applied to the Speed Limit Input (VLIM) and the Servomotor speed. |
| Torque Output Direction Switch | Set to reverse the polarity of the Torque Command Input (REF/TREF or PCL/TREF). |
| No. 1 Torque Limit | Set the limit to the Servomotor's maximum torque. |
| No. 2 Torque Limit | Set the limit to the Servomotor's maximum torque. |

## Sequence Parameters

| Parameter name | Explanation |
|---|---|
| Positioning Completion Range | Set the range for the Positioning Completed Output (INP). |
| Zero Speed Detection | Set the rotation speed to output for the general-purpose output (zero speed detection output or speed coincidence output). |
| Rotation Speed for Motor Rotation Detection | Set the rotation speed for the Servomotor Rotation Detection Output (TGON) for Internally Set Speed Control. |
| Positioning Completion Condition Setting | Set the operation for positioning completion output (INP). |
| Undervoltage Alarm Selection | Select whether to activate the main power supply undervoltage function (alarm code 13) if the main power supply is interrupted for the Momentary Hold Time (Pn6D) during Servo ON. |
| Stop Selection for Drive Prohibition Input | Set the operation used to decelerate to a stop after the Forward Drive Prohibit Input (POT) or Reverse Drive Prohibit Input (NOT) has been received. |
| Stop Selection with Main Power OFF | Set one of the following operations for after the main power supply is cut off if the Undervoltage Alarm Selection (Pn65) is set to 0.<br>·Operation during deceleration and after stopping<br>·Clearing the deviation counter |
| Stop Selection for Alarm Generation | Set the operation to be performed after stopping or during deceleration when any protective function of the Servo Drive operates and an error occurs. |
| Stop Selection with Servo OFF | Set the operation to be performed after the Servomotor turns OFF (i.e., RUN ON to OFF). The relation between set values, operation, and deviation counter processing for this parameter is the same as for the Stop Selection with Main Power OFF (Pn67). |
| Brake Timing when Stopped | When the Servomotor is stopped and the RUN Command Input (RUN) is turned OFF, the Brake Interlock Signal (BKIR) will turn OFF, and the Servomotor will turn OFF after waiting for the time period set for this parameter (i.e., setting × 2 ms). |
| Brake Timing during Operation | When the Servomotor is stopped and the RUN Command Input (RUN) is turned OFF, the Servomotor will decelerate to reduce rotation speed, and the Brake Interlock Signal (BKIR) will turn OFF after the set time for the parameter (i.e., setting × 2 ms) has elapsed.<br>BKIR will also turn OFF if the speed drops to 30 r/min or lower before the set time elapses. |
| Regeneration Resistor Selection | Set whether to use a built-in resistor or to add an External Regeneration Resistor. |
| Momentary Hold Time | Set the amount of time required until shutoff is detected if the main power supply continues to shut off. |
| Emergency Stop Torque | Set the torque limit for the following cases.<br>·Drive prohibit deceleration with Stop Selection for Drive Prohibit Input (Pn66) set to 2.<br>·Deceleration with Stop Selection with Main Power OFF (Pn67) set to 8 or 9.<br>·Deceleration with Stop Selection with Servo OFF (Pn69) set to 8 or 9. |
| Deviation Counter Overflow Level | Set the deviation counter overflow level. |
| Speed Command/Torque Command Input Overflow Level Setting | Set the overflow level for Speed Command Input (REF) or Torque Command Input (TREF) using voltage after offset adjustment. |
| Overload Detection Level Setting | Set the overload detection level. |
| Overspeed Detection Level Setting | Set the overspeed detection level. |

## Dimensions

(Unit: mm)

### ●Servo Drives

- **Single-phase 100 VAC (50 to 100 W)**
  **R88D-GTA5L**
  **R88D-GT01L**
- **Single-phase 200 VAC (50 to 200 W)**
  **R88D-GT01H**
  **R88D-GT02H**

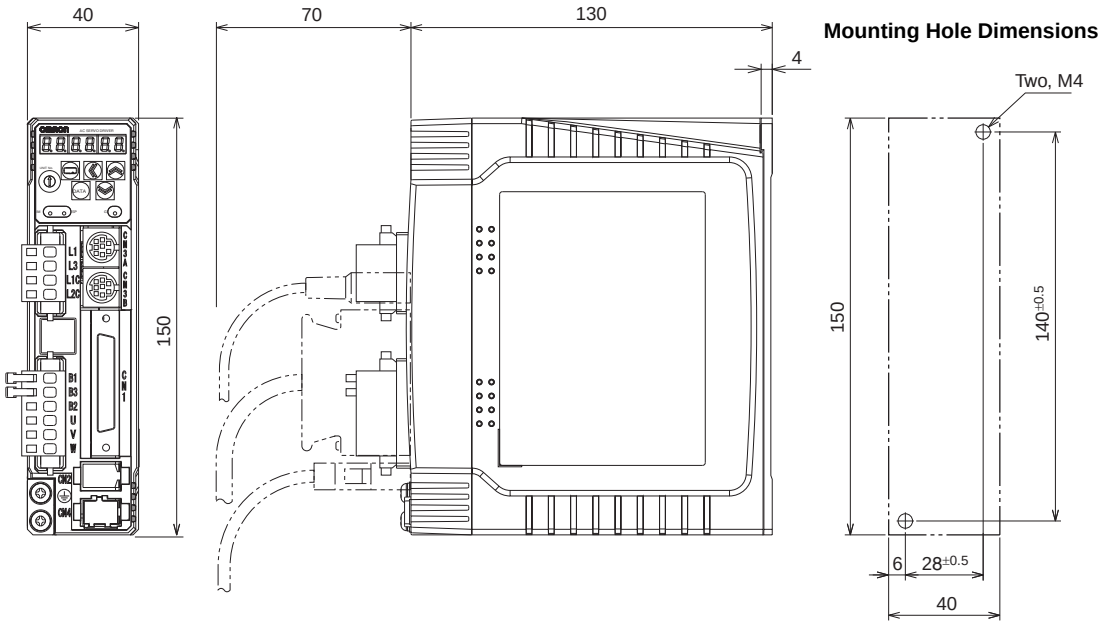


- **Single-phase 100 VAC (200 W)**
  **R88D-GT02L**
- **Single-phase 200 VAC (400 W)**
  **R88D-GT04H**

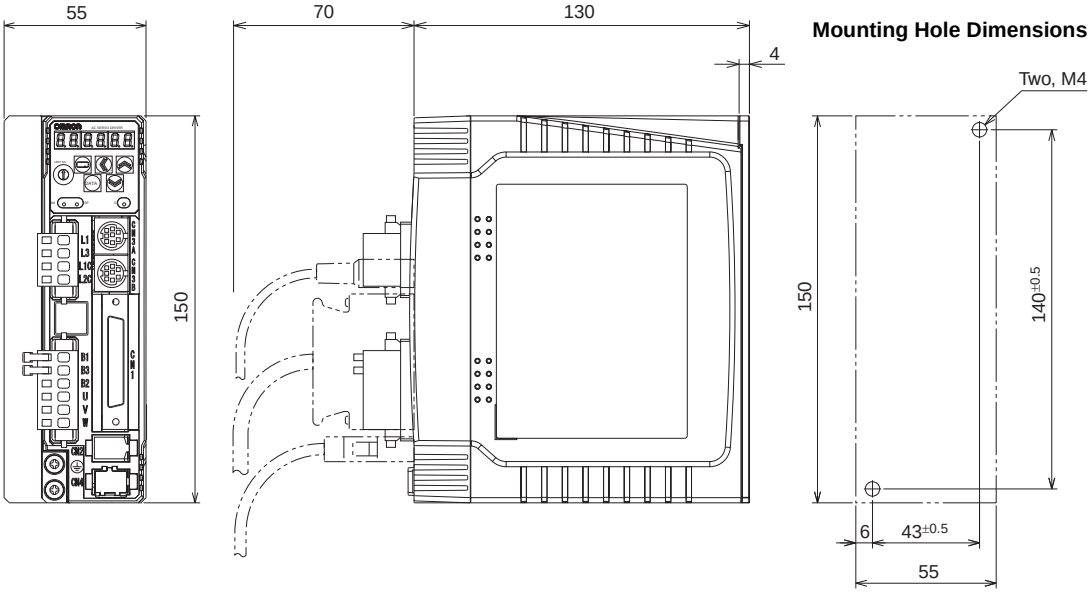

- **Single-phase 100 VAC (400 W)**
  **R88D-GT04L**
- **Single-phase/Three-phase 200 VAC (750 W)**
  **R88D-GT08H**

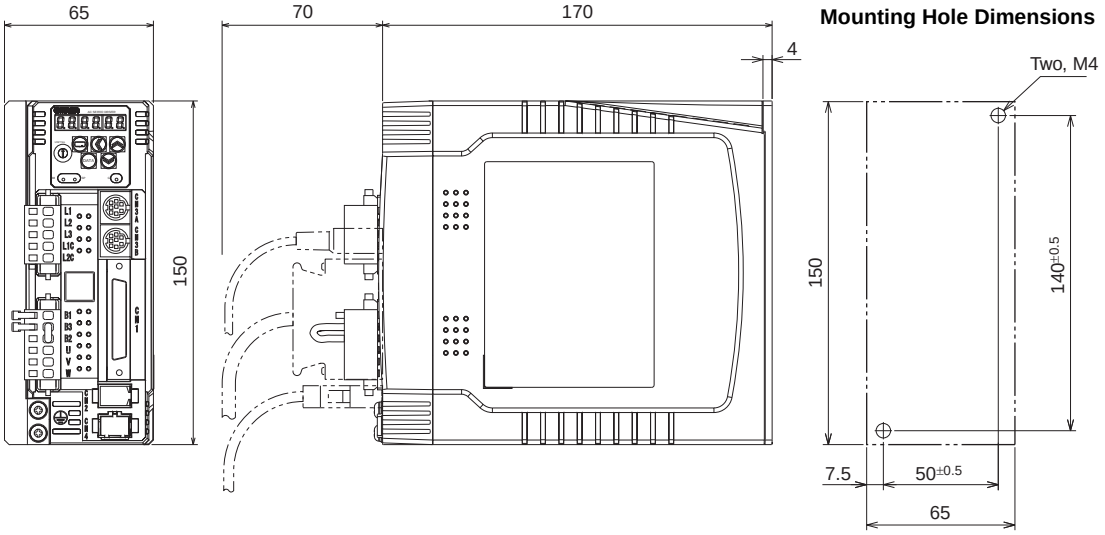


- **Single-phase/Three-phase 200 VAC (900 W to 1.5 kW)**
  **R88D-GT10H**
  **R88D-GT15H**

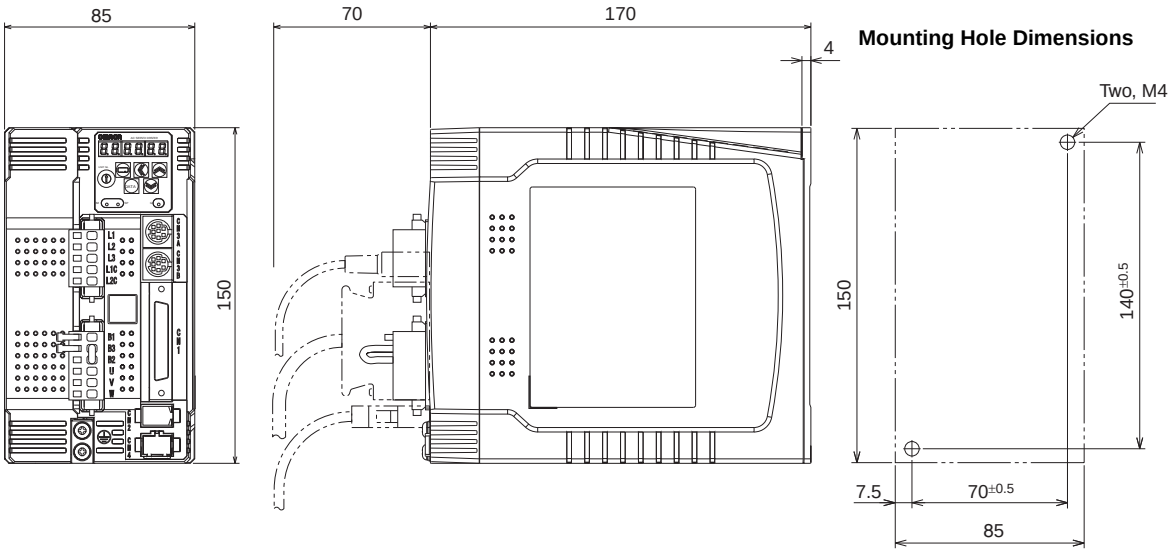

- **Three-phase 200 VAC (2 kW)**
  **R88D-GT20H**

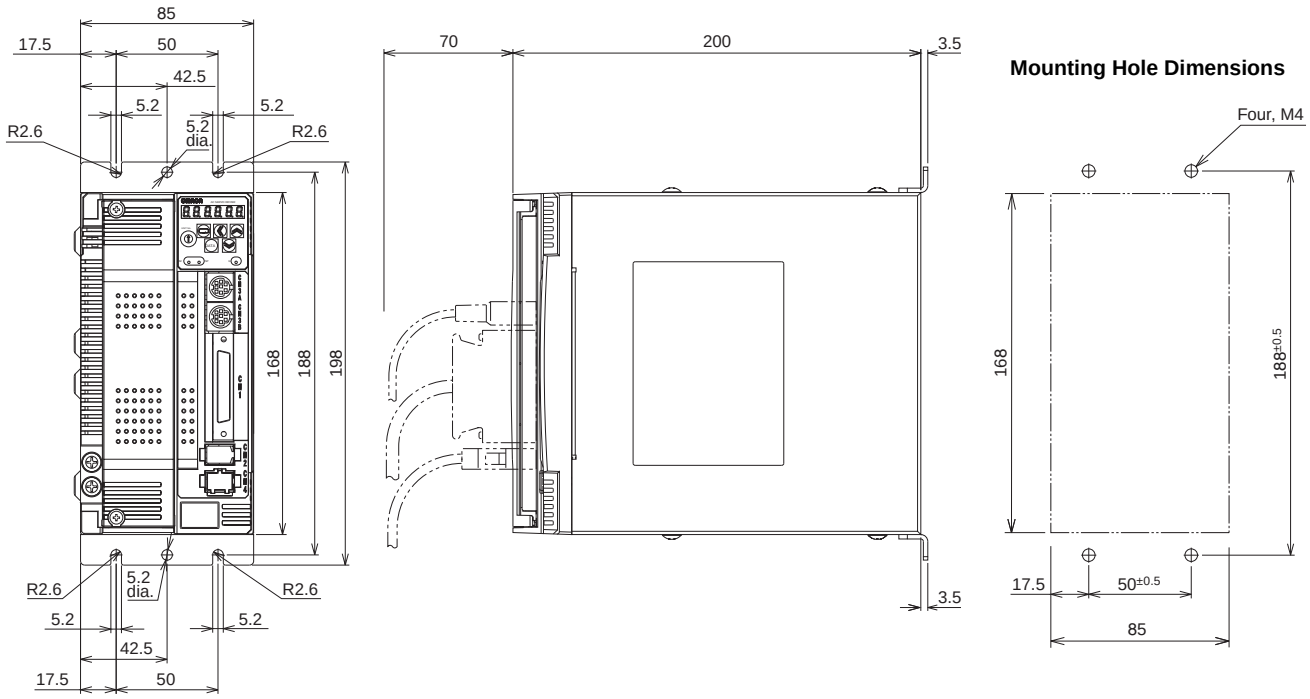


- **Three-phase 200 VAC (2 to 5 kW)**
  **R88D-GT30H/-GT50H**

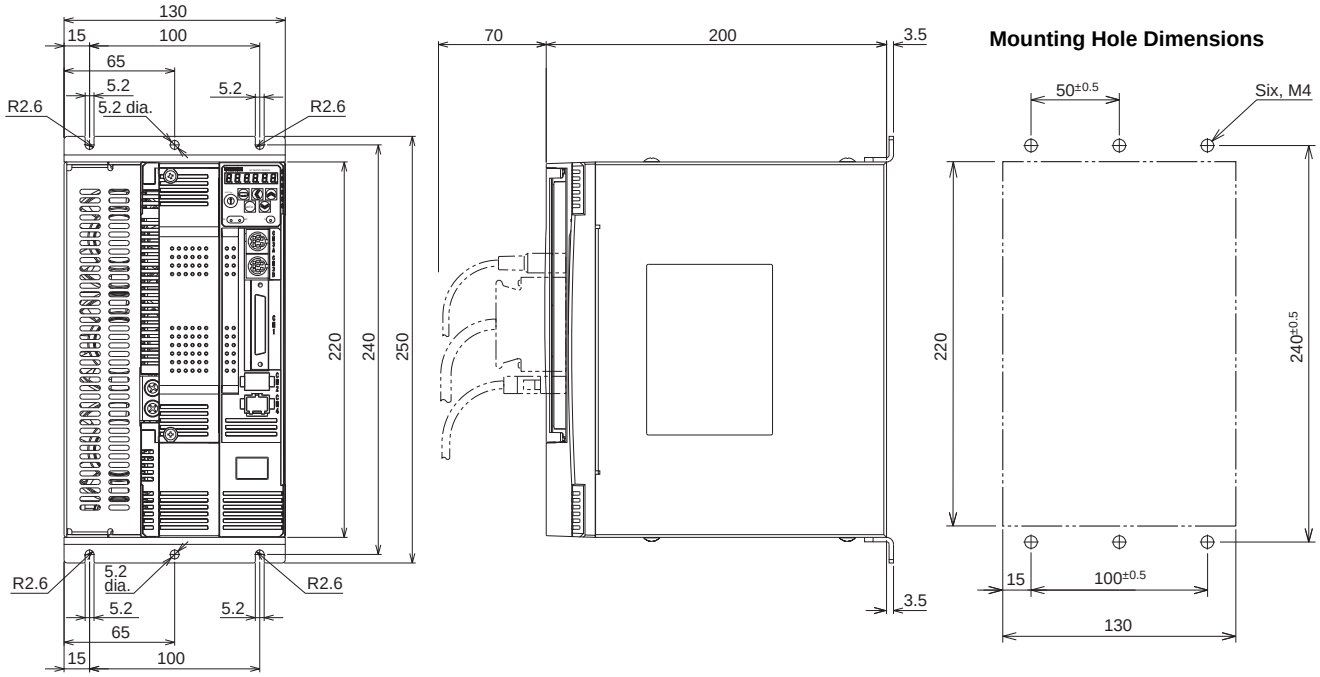

- **Three-phase 200 VAC (7.5 kW)**
  **R88D-GT75H**
  **Front Panel Mounting (Using Mounting Brackets)**

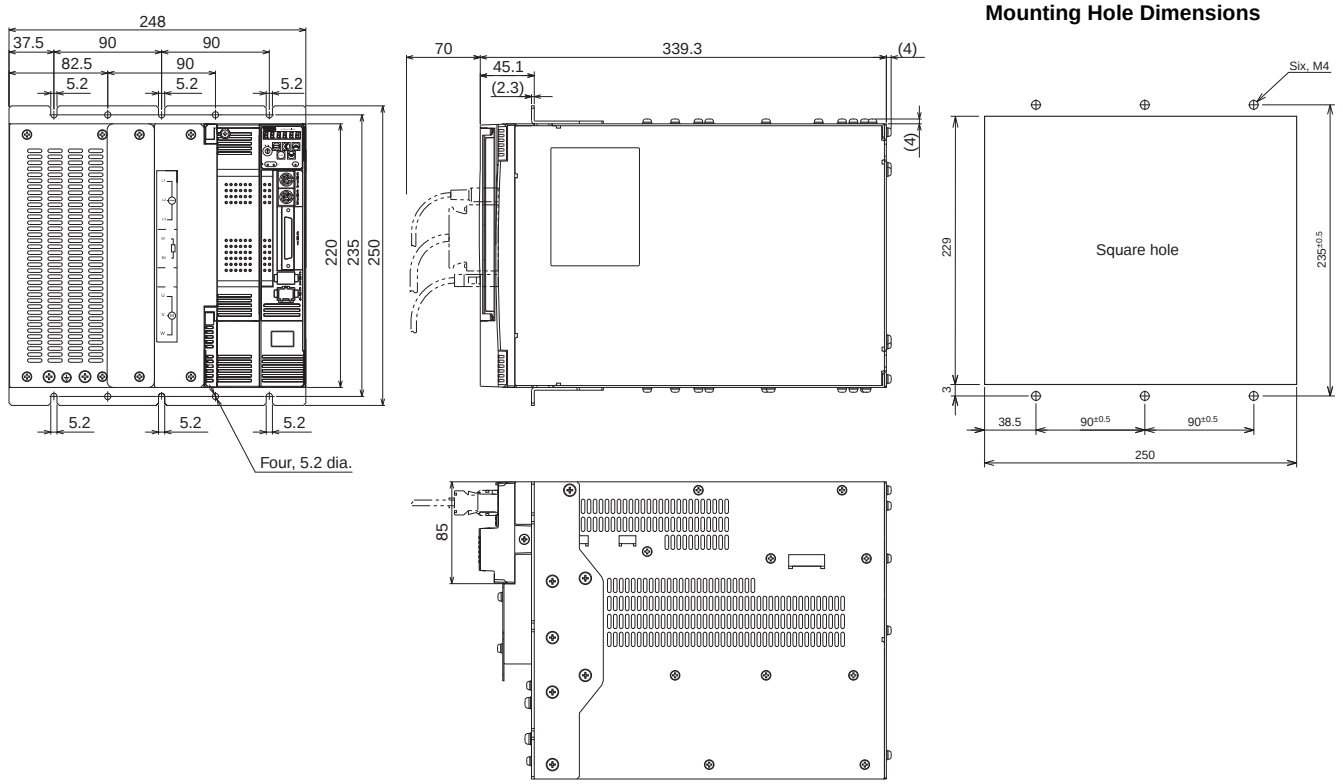

## ● Servomotors

### 3,000-r/min Cylindrical Servomotors

- **50 W/100 W**

| INC | ABS |
|---|---|
| R88M-G05030H (-S2) | R88M-G05030T (-S2) |
| R88M-G10030L (-S2) | R88M-G10030S (-S2) |
| R88M-G10030H (-S2) | R88M-G10030T (-S2) |
| R88M-G05030H-B (S2) | R88M-G05030T-B (S2) |
| R88M-G10030L-B (S2) | R88M-G10030S-B (S2) |
| R88M-G10030H-B (S2) | R88M-G10030T-B (S2) |

| Model | LL | LN |
|---|---|---|
| R88M-G05030□ | 72 | 26.5 |
| R88M-G10030□ | 92 | 46.5 |
| R88M-G05030□-B | 102 | 26.5 |
| R88M-G10030□-B | 122 | 46.5 |

*The empty bax in the L, H, L, T or S.
**Note:** The standard models have a straight shaft. A model with a key and tap is indicated by adding "S2" to the end of the model number.

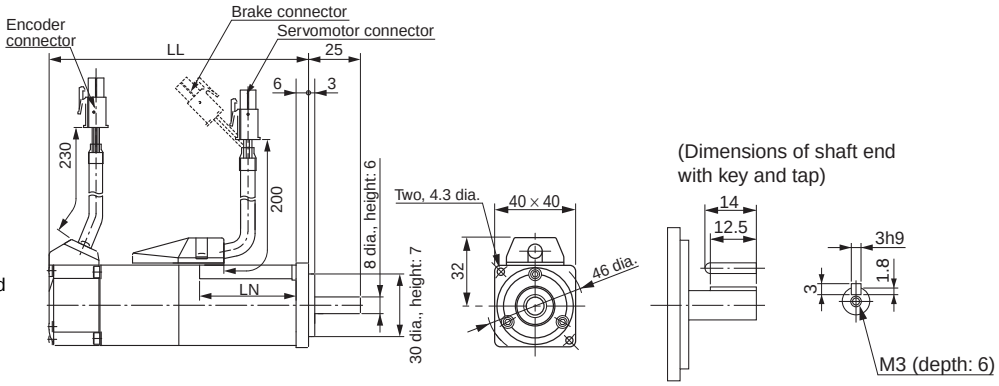


- **200 W/400 W/750 W**

| INC | ABS |
|---|---|
| R88M-G20030L (-S2) | R88M-G20030S (-S2) |
| R88M-G40030L (-S2) | R88M-G40030S (-S2) |
| R88M-G20030H (-S2) | R88M-G20030T (-S2) |
| R88M-G40030H (-S2) | R88M-G40030T (-S2) |
| R88M-G75030H (-S2) | R88M-G75030T (-S2) |
| R88M-G20030L-B (S2) | R88M-G20030S-B (S2) |
| R88M-G40030L-B (S2) | R88M-G40030S-B (S2) |
| R88M-G20030H-B (S2) | R88M-G20030T-B (S2) |
| R88M-G40030H-B (S2) | R88M-G40030T-B (S2) |
| R88M-G75030H-B (S2) | R88M-G75030T-B (S2) |

| Model | LL | LR | S | D1 | D2 | C | G | Z | KL1 | QK | b | h | M | t1 | L |
|---|---|---|---|---|---|---|---|---|---|---|---|---|---|---|---|
| R88M-G20030□ | 79.5 | 30 | 11 | 70 | 50 | 60 | 6.5 | 4.5 | 43 | 18 | 4h9 | 4 | M4 | 2.5 | 8 |
| R88M-G40030□ | 99 | | 14 | | | | | | | 22.5 | 5h9 | 5 | M5 | 3 | 10 |
| R88M-G75030□ | 112.2 | 35 | 19 | 90 | 70 | 80 | 8 | 6 | 53 | 22 | 6h9 | 6 | | 3.5 | |
| R88M-G20030□-B | 116 | 30 | 11 | 70 | 50 | 60 | 6.5 | 4.5 | 43 | 18 | 4h9 | 4 | M4 | 2.5 | 8 |
| R88M-G40030□-B | 135.5 | | 14 | | | | | | | 22.5 | 5h9 | 5 | M5 | 3 | 10 |
| R88M-G75030□-B | 149.2 | 35 | 19 | 90 | 70 | 80 | 8 | 6 | 53 | 22 | 6h9 | 6 | | 3.5 | |

*The empty bax in the L, H, L, T or S.
**Note:** The standard models have a straight shaft. A model with a key and tap is indicated by adding "S2" to the end of the model number.

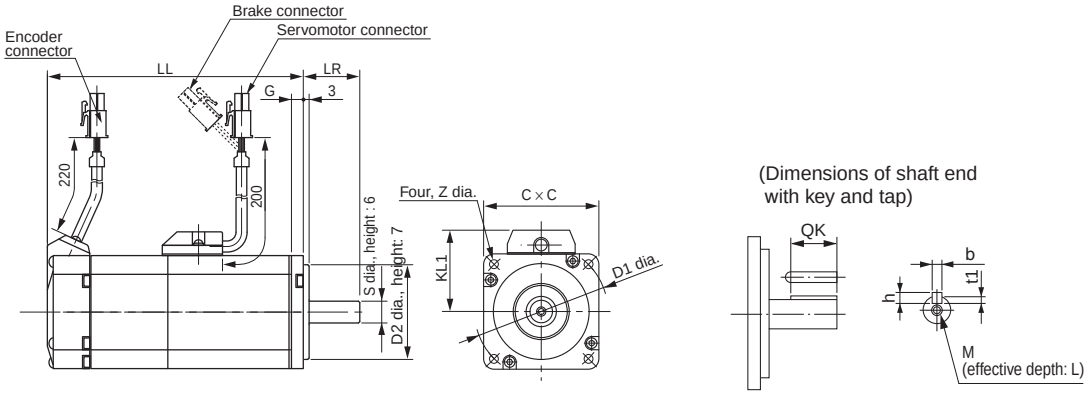

- **1 kW/1.5 kW/2 kW**

**ABS**

**R88M-G1K030T (-S2)**
**R88M-G1K530T (-S2)**
**R88M-G2K030T (-S2)**
**R88M-G1K030T-B (S2)**
**R88M-G1K530T-B (S2)**
**R88M-G2K030T-B (S2)**

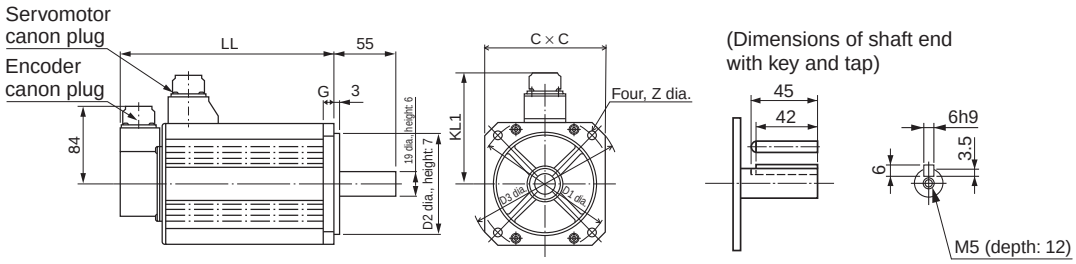


| Model | LL | D1 | D2 | C | D3 | G | KL1 | Z |
|---|---|---|---|---|---|---|---|---|
| R88M-G1K030T | 175 | 100 | 80 | 90 | 120 | 7 | 98 | 6.6 |
| R88M-G1K530T | 180 | 115 | 95 | 100 | 135 | 10 | 103 | 9 |
| R88M-G2K030T | 205 | | | | | | | |
| R88M-G1K030T-B | 200 | 100 | 80 | 90 | 120 | 7 | 98 | 6.6 |
| R88M-G1K530T-B | 205 | 115 | 95 | 100 | 135 | 10 | 103 | 9 |
| R88M-G2K030T-B | 230 | | | | | | | |

**Note:** The standard models have a straight shaft.
A model with a key and tap is indicated by adding “S2” to the end of the model number.

- **3 kW**

**ABS**

**R88M-G3K030T (-S2)**
**R88M-G3K030T-B (S2)**

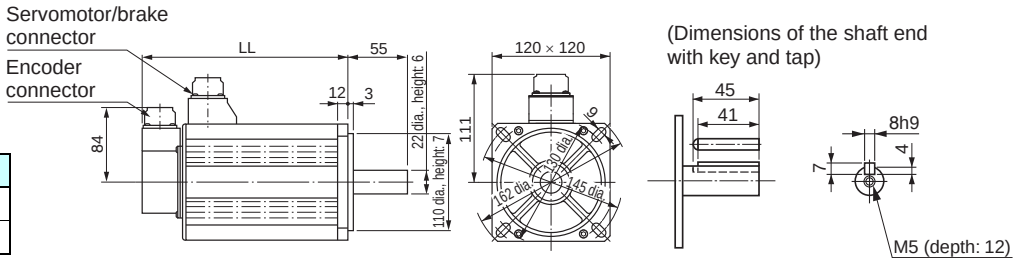


| Model | LL |
|---|---|
| R88M-G3K030T | 217 |
| R88M-G3K030T-B | 242 |

**Note:** The standard models have a straight shaft.
A model with a key and tap is indicated by adding “S2” to the end of the model number.

- **4 kW/5 kW**

**ABS**

**R88M-G4K030T (-S2)**
**R88M-G5K030T (-S2)**
**R88M-G4K030T-B (S2)**
**R88M-G5K030T-B (S2)**

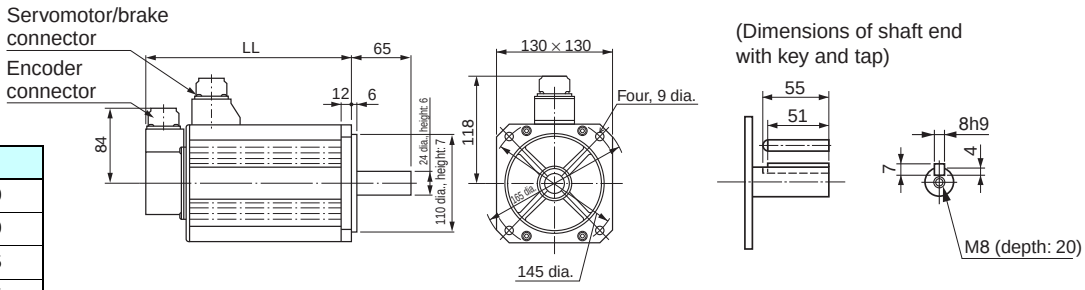


| Model | LL |
|---|---|
| R88M-G4K030T | 240 |
| R88M-G5K030T | 280 |
| R88M-G4K030T-B | 265 |
| R88M-G5K030T-B | 305 |

**Note:** The standard models have a straight shaft.
A model with a key and tap is indicated by adding “S2” to the end of the model number.

## 3,000-r/min Flat Servomotors

- **100 W/200 W/400 W**

| INC | ABS |
|---|---|
| R88M-GP10030L (-S2) | R88M-GP10030S (-S2) |
| R88M-GP20030L (-S2) | R88M-GP20030S (-S2) |
| R88M-GP40030L (-S2) | R88M-GP40030S (-S2) |
| R88M-GP10030H (-S2) | R88M-GP10030T (-S2) |
| R88M-GP20030H (-S2) | R88M-GP20030T (-S2) |
| R88M-GP40030H (-S2) | R88M-GP40030T (-S2) |
| R88M-GP10030L-B (S2) | R88M-GP10030S-B (S2) |
| R88M-GP20030L-B (S2) | R88M-GP20030S-B (S2) |
| R88M-GP40030L-B (S2) | R88M-GP40030S-B (S2) |
| R88M-GP10030H-B (S2) | R88M-GP10030T-B (S2) |
| R88M-GP20030H-B (S2) | R88M-GP20030T-B (S2) |
| R88M-GP40030H-B (S2) | R88M-GP40030T-B (S2) |

| Model | LL | LR | S | D1 | D2 | C | F | G | KL1 | Z | QK | b | h | t1 | M | L |
|---|---|---|---|---|---|---|---|---|---|---|---|---|---|---|---|---|
| R88M-GP10030L<br>R88M-GP10030H | 60.5 | 25 | 8 | 70 | 50 | 60 | 3 | 7 | 43 | 4.5 | 12.5 | 3h9 | 3 | 1.8 | M3 | 6 |
| R88M-GP10030S<br>R88M-GP10030T | 87.5 | | | | | | | | | | | | | | | |
| R88M-GP20030L<br>R88M-GP20030H | 67.5 | 30 | 11 | 90 | 70 | 80 | 5 | 8 | 53 | 5.5 | 18 | 4h9 | 4 | 2.5 | M4 | 8 |
| R88M-GP20030S<br>R88M-GP20030T | 94.5 | | | | | | | | | | | | | | | |
| R88M-GP40030L<br>R88M-GP40030H | 82.5 | | 14 | | | | | | | | 22.5 | 5h9 | 5 | 3.0 | M5 | 10 |
| R88M-GP40030S<br>R88M-GP40030T | 109.5 | | | | | | | | | | | | | | | |
| R88M-GP10030L-B<br>R88M-GP10030H-B | 84.5 | 25 | 8 | 70 | 50 | 60 | 3 | 7 | 43 | 4.5 | 12.5 | 3h9 | 3 | 1.8 | M3 | 6 |
| R88M-GP10030S-B<br>R88M-GP10030T-B | 111.5 | | | | | | | | | | | | | | | |
| R88M-GP20030L-B<br>R88M-GP20030H-B | 100 | 30 | 11 | 90 | 70 | 80 | 5 | 8 | 53 | 5.5 | 18 | 4h9 | 4 | 2.5 | M4 | 8 |
| R88M-GP20030S-B<br>R88M-GP20030T-B | 127 | | | | | | | | | | | | | | | |
| R88M-GP40030L-B<br>R88M-GP40030H-B | 115 | | 14 | | | | | | | | 22.5 | 5h9 | 5 | 3.0 | M5 | 10 |
| R88M-GP40030S-B<br>R88M-GP40030T-B | 142 | | | | | | | | | | | | | | | |

**Note:** The standard models have a straight shaft. A model with a key and tap is indicated by adding “S2” to the end of the model number.

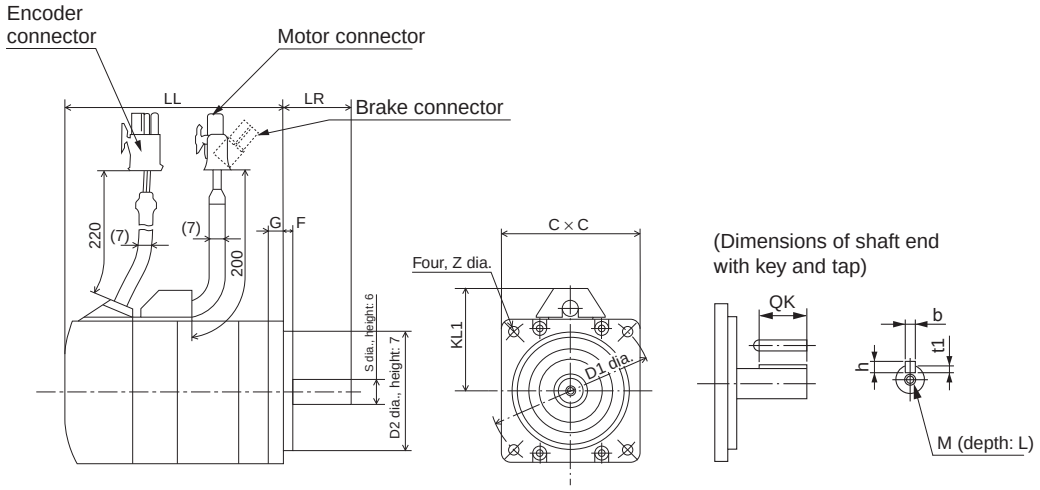

## 2,000-r/min Cylindrical Servomotors

### • 200 VAC: 1 kW/1.5 kW

**ABS**

**R88M-G1K020T (-S2)**
**R88M-G1K520T (-S2)**
**R88M-G1K020T-B (S2)**
**R88M-G1K520T-B (S2)**

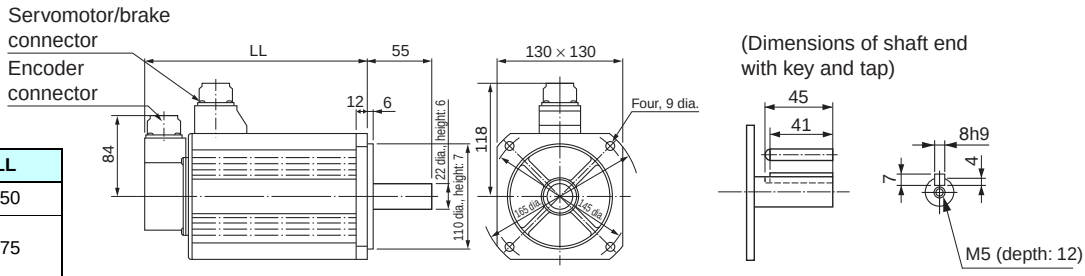


| Model | LL |
|---|---|
| R88M-G1K020T | 150 |
| R88M-G1K520T | 175 |
| R88M-G1K020T-B | |
| R88M-G1K520T-B | 200 |

**Note:** The standard models have a straight shaft.
A model with a key and tap is indicated by adding “S2” to the end of the model number.

### • 200 VAC: 2 kW/3 kW

**ABS**

**R88M-G2K020T (-S2)**
**R88M-G3K020T (-S2)**
**R88M-G2K020T-B (S2)**
**R88M-G3K020T-B (S2)**

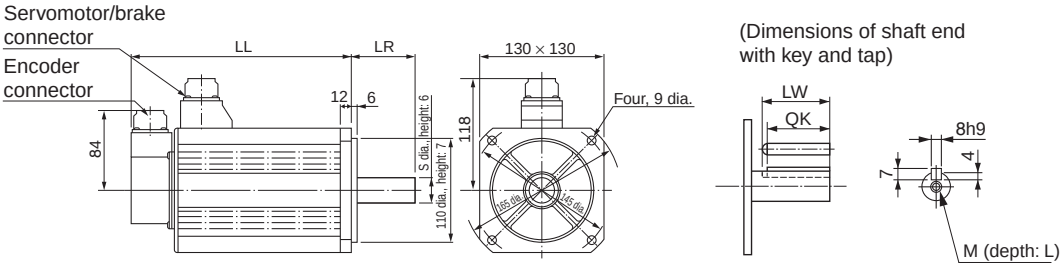


| Model | LL | LR | S | LW | QK | M | L |
|---|---|---|---|---|---|---|---|
| R88M-G2K020T | 200 | 55 | 22 | 45 | 41 | M5 | 12 |
| R88M-G3K020T | 250 | 65 | 24 | 55 | 51 | M8 | 20 |
| R88M-G2K020T-B | 225 | 55 | 22 | 45 | 41 | M5 | 12 |
| R88M-G3K020T-B | 275 | 65 | 24 | 55 | 51 | M8 | 20 |

**Note:** The standard models have a straight shaft.
A model with a key and tap is indicated by adding “S2” to the end of the model number.

### • 200 VAC : 4 kW/5 kW

**ABS**

**R88M-G4K020T (-S2)**
**R88M-G5K020T (-S2)**
**R88M-G4K020T-B (S2)**
**R88M-G5K020T-B (S2)**

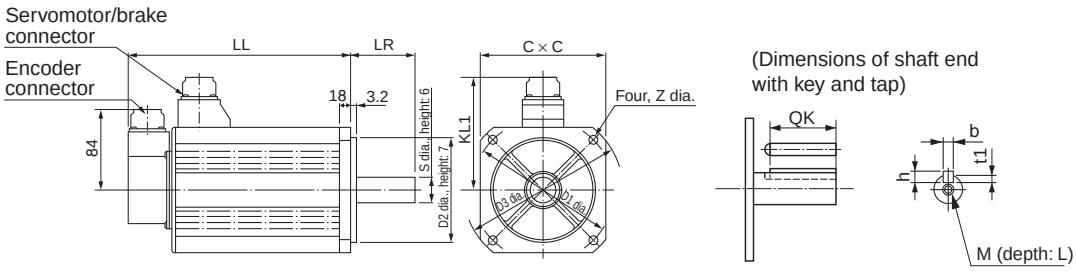


| Model | LL | LR | S | D1 | D2 | C | D3 | KL1 | Z | QK | b | h | t1 | M | L |
|---|---|---|---|---|---|---|---|---|---|---|---|---|---|---|---|
| R88M-G4K020T | 242 | 65 | 28 | 165 | 130 | 150 | 190 | 128 | 11 | 51 | 8h9 | 7 | 4 | M8 | 20 |
| R88M-G5K020T | 225 | 70 | 35 | 200 | 114.3 | 176 | 233 | 143 | 13.5 | 50 | 10h9 | 8 | 5 | M12 | 25 |
| R88M-G4K020T-B | 267 | 65 | 28 | 165 | 130 | 150 | 190 | 128 | 11 | 51 | 8h9 | 7 | 4 | M8 | 20 |
| R88M-G5K020T-B | 250 | 70 | 35 | 200 | 114.3 | 176 | 233 | 143 | 13.5 | 50 | 10h9 | 8 | 5 | M12 | 25 |

**Note:** The standard models have a straight shaft. A model with a key and tap is indicated by adding “S2” to the end of the model number.

## 1,500-r/min Cylindrical Servomotors

- **7.5 kW**

**ABS**

**R88M-G7K515T (-S2)**
**R88M-G7K515T-B (S2)**

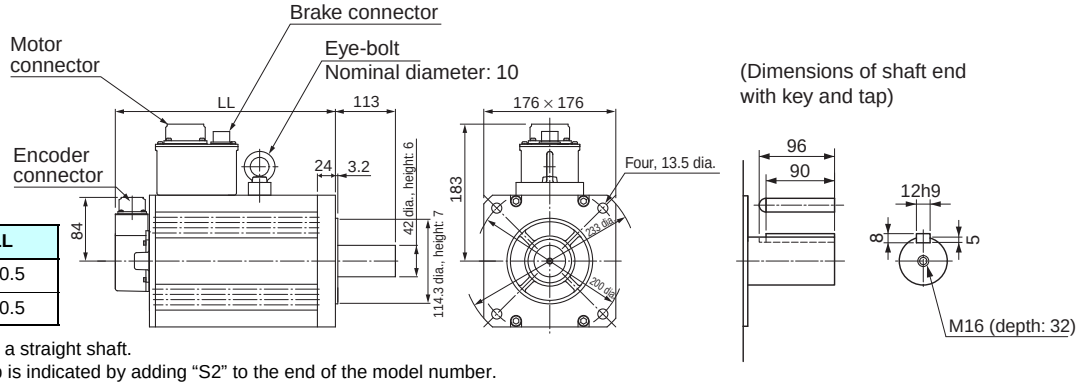


| Model | LL |
|---|---|
| R88M-G7K515T | 340.5 |
| R88M-G7K515T-B | 380.5 |

**Note:** The standard models have a straight shaft.
A model with a key and tap is indicated by adding "S2" to the end of the model number.

## 1,000-r/min Cylindrical Servomotors

- **900 W/2 kW**

**ABS**

**R88M-G90010T (-S2)**
**R88M-G2K010T (-S2)**
**R88M-G90010T-B (S2)**
**R88M-G2K010T-B (S2)**

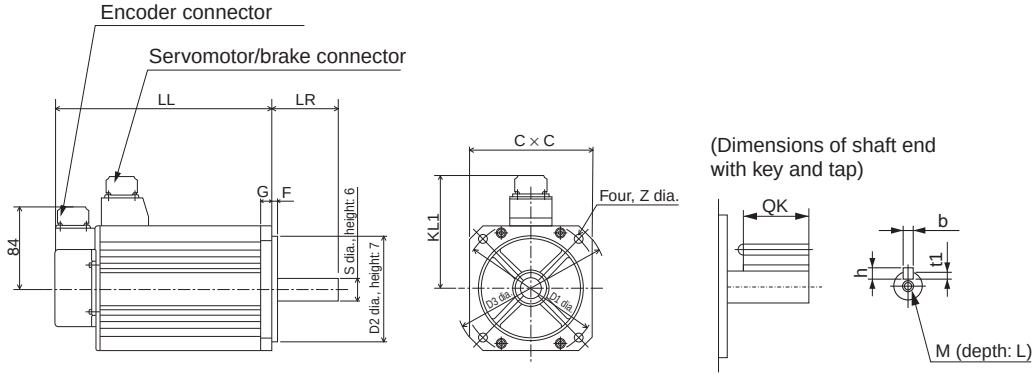


| Model | LL | LR | S | D1 | D2 | C | D3 | F | G | KL1 | Z | QK | b | h | t1 | M | L |
|---|---|---|---|---|---|---|---|---|---|---|---|---|---|---|---|---|---|
| R88M-G90010T | 175 | 70 | 22 | 145 | 110 | 130 | 165 | 6 | 12 | 118 | 9 | 41 | 8h9 | 7 | 4 | M5 | 12 |
| R88M-G2K010T | 182 | 80 | 35 | 200 | 114.3 | 176 | 233 | 3.2 | 18 | 143 | 13.5 | 50 | 10h9 | 8 | 5 | M12 | 25 |
| R88M-G90010T-B | 200 | 70 | 22 | 145 | 110 | 130 | 165 | 6 | 12 | 118 | 9 | 41 | 8h9 | 7 | 4 | M5 | 12 |
| R88M-G2K010T-B | 207 | 80 | 35 | 200 | 114.3 | 176 | 233 | 3.2 | 18 | 143 | 13.5 | 50 | 10h9 | 8 | 5 | M12 | 25 |

**Note:** The standard models have a straight shaft. A model with a key and tap is indicated by adding "S2" to the end of the model number.

- **3 kW**

**ABS**

**R88M-G3K010T (-S2)**
**R88M-G3K010T-B (S2)**

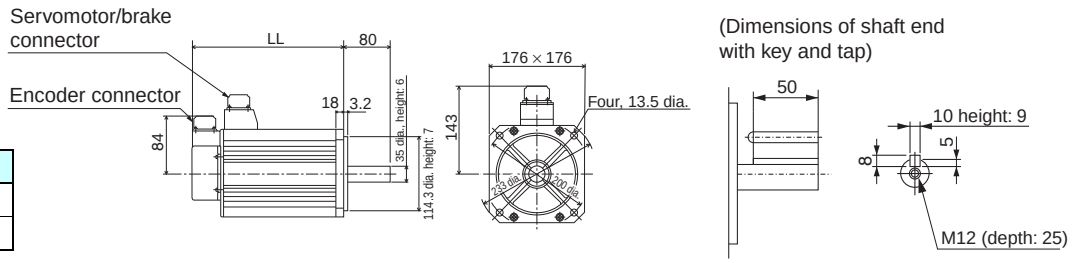


| Model | LL |
|---|---|
| R88M-G3K010T | 222 |
| R88M-G3K010T-B | 271 |

**Note:** The standard models have a straight shaft.
A model with a key and tap is indicated by adding "S2" to the end of the model number.

- **4.5 kW**

**ABS**

**R88M-G4K510T (-S2)**
**R88M-G4K510T-B (S2)**

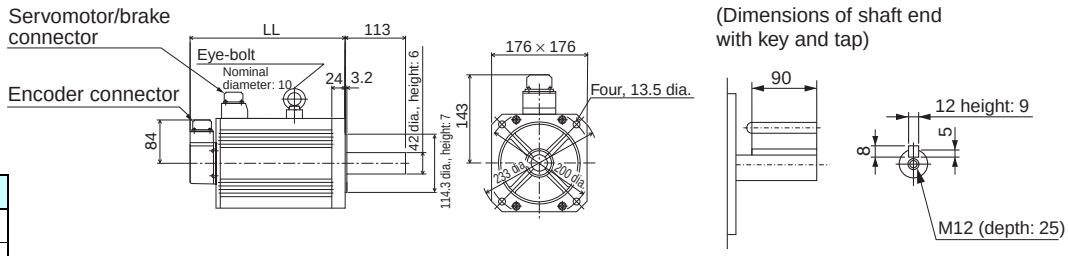


| Model | LL |
|---|---|
| **R88M-G4K510T** | 300.5 |
| **R88M-G4K510T-B** | 337.5 |

**Note:** The standard models have a straight shaft.
A model with a key and tap is indicated by adding “S2” to the end of the model number.

- **6 kW**

**ABS**

**R88M-G6K010T (-S2)**
**R88M-G6K010T-B (S2)**

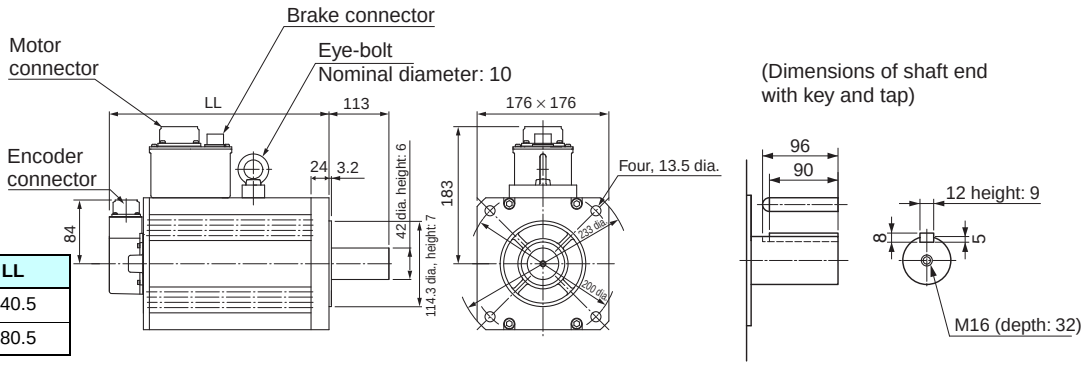


| Model | LL |
|---|---|
| **R88M-G6K010T** | 340.5 |
| **R88M-G6K010T-B** | 380.5 |

**Note:** The standard models have a straight shaft.
A model with a key and tap is indicated by adding “S2” to the end of the model number.

## ● Decelerators

**Backlash: 3 Arcminutes Max.**

**<Cylinder Type>**

### ● 3,000-r/min Servomotors (50 to 750 W)

| Model | | | Outline Drawings | Dimensions (mm) | | | | | | | | | | | |
|---|---|---|---|---|---|---|---|---|---|---|---|---|---|---|---|
| | | | | LM | LR | C1 | C2 | D1 | D2 | D3 | D4 | D5 | E | F1 | F2 |
| 50W | 1/5 | R88G-HPG11B05100B□ | 1 *4 | 39.5 | 42 | 40 | 40 × 40 | 46 | 46 | 40 | 39.5 | 29 | 27 | 2.2 | 15 |
| | 1/9 | R88G-HPG11B09050B□ | 1 *4 | 39.5 | 42 | 40 | 40 × 40 | 46 | 46 | 40 | 39.5 | 29 | 27 | 2.2 | 15 |
| | 1/21 | R88G-HPG14A21100B□ | 1 | 64.0 | 58 | 60 | 60 × 60 | 70 | 46 | 56 | 55.5 | 40 | 37 | 2.5 | 21 |
| | 1/33 | R88G-HPG14A33050B□ | 1 | 64.0 | 58 | 60 | 60 × 60 | 70 | 46 | 56 | 55.5 | 40 | 37 | 2.5 | 21 |
| | 1/45 | R88G-HPG14A45050B□ | 1 | 64.0 | 58 | 60 | 60 × 60 | 70 | 46 | 56 | 55.5 | 40 | 37 | 2.5 | 21 |
| 100W | 1/5 | R88G-HPG11B05100B□ | 1 *4 | 39.5 | 42 | 40 | 40 × 40 | 46 | 46 | 40 | 39.5 | 29 | 27 | 2.2 | 15 |
| | 1/11 | R88G-HPG14A11100B□ | 1 | 64.0 | 58 | 60 | 60 × 60 | 70 | 46 | 56 | 55.5 | 40 | 37 | 2.5 | 21 |
| | 1/21 | R88G-HPG14A21100B□ | 1 | 64.0 | 58 | 60 | 60 × 60 | 70 | 46 | 56 | 55.5 | 40 | 37 | 2.5 | 21 |
| | 1/33 | R88G-HPG20A33100B□ | 2 | 66.5 | 80 | 90 | 55 dia. | 105 | 46 | 85 | 84 | 59 | 53 | 7.5 | 27 |
| | 1/45 | R88G-HPG20A45100B□ | 2 | 66.5 | 80 | 90 | 55 dia. | 105 | 46 | 85 | 84 | 59 | 53 | 7.5 | 27 |
| 200W | 1/5 | R88G-HPG14A05200B□ | 1 | 64.0 | 58 | 60 | 60 × 60 | 70 | 70 | 56 | 55.5 | 40 | 37 | 2.5 | 21 |
| | 1/11 | R88G-HPG14A11200B□ | 1 | 64.0 | 58 | 60 | 60 × 60 | 70 | 70 | 56 | 55.5 | 40 | 37 | 2.5 | 21 |
| | 1/21 | R88G-HPG20A21200B□ | 1 | 71.0 | 80 | 90 | 90 × 90 | 105 | 70 | 85 | 84 | 59 | 53 | 7.5 | 27 |
| | 1/33 | R88G-HPG20A33200B□ | 2 | 71.0 | 80 | 90 | 89 dia. | 105 | 70 | 85 | 84 | 59 | 53 | 7.5 | 27 |
| | 1/45 | R88G-HPG20A45200B□ | 2 | 71.0 | 80 | 90 | 89 dia. | 105 | 70 | 85 | 84 | 59 | 53 | 7.5 | 27 |
| 400W | 1/5 | R88G-HPG14A05400B□ | 1 | 64 | 58 | 60 | 60 × 60 | 70 | 70 | 56 | 55.5 | 40 | 37 | 2.5 | 21 |
| | 1/11 | R88G-HPG20A11400B□ | 2 | 71 | 80 | 90 | 89 dia. | 105 | 70 | 85 | 84 | 59 | 53 | 7.5 | 27 |
| | 1/21 | R88G-HPG20A21400B□ | 2 | 71 | 80 | 90 | 89 dia. | 105 | 70 | 85 | 84 | 59 | 53 | 7.5 | 27 |
| | 1/33 | R88G-HPG32A33400B□ | 2 | 104 | 133 | 120 | 122 dia. | 135 | 70 | 115 | 114 | 84 | 98 | 12.5 | 35 |
| | 1/45 | R88G-HPG32A45400B□ | 2 | 104 | 133 | 120 | 122 dia. | 135 | 70 | 115 | 114 | 84 | 98 | 12.5 | 35 |
| 750W (200V) | 1/5 | R88G-HPG20A05750B□ | 1 | 78 | 80 | 90 | 80 × 80 | 105 | 90 | 85 | 84 | 59 | 53 | 7.5 | 27 |
| | 1/11 | R88G-HPG20A11750B□ | 1 | 78 | 80 | 90 | 80 × 80 | 105 | 90 | 85 | 84 | 59 | 53 | 7.5 | 27 |
| | 1/21 | R88G-HPG32A21750B□ | 2 | 104 | 133 | 120 | 122 dia. | 135 | 90 | 115 | 114 | 84 | 98 | 12.5 | 35 |
| | 1/33 | R88G-HPG32A33750B□ | 2 | 104 | 133 | 120 | 122 dia. | 135 | 90 | 115 | 114 | 84 | 98 | 12.5 | 35 |
| | 1/45 | R88G-HPG32A45750B□ | 2 | 104 | 133 | 120 | 122 dia. | 135 | 90 | 115 | 114 | 84 | 98 | 12.5 | 35 |

**Note: 1.** The standard models have a straight shaft.
**Note: 2.** To order a Decelerator with a straight shaft with key and tap, add "J" to the end of the model number, in the place indicated by the box. (e.g., R88G-HPG11B05100BJ)
**Note: 3.** The diameter of the motor shaft insertion portion is the same as the diameter of the shaft of the corresponding motor.
**Note: 4.** Applicable for the servomotors with key, if the key is removed.
**Note: 5.** The dimensional drawings in this document are designed to indicate only the main dimensions. They do not necessarily represent the detailed shapes of the products.

### Outline Drawings 1

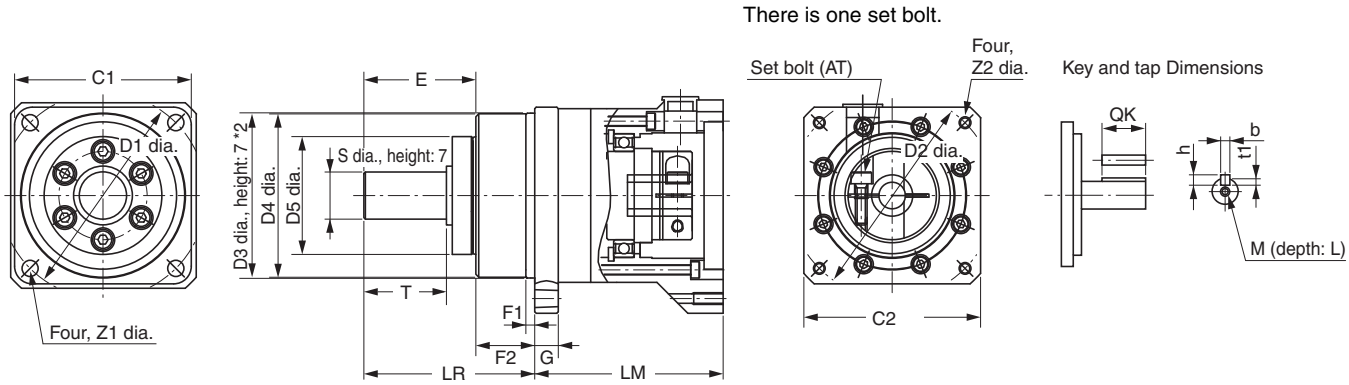


*2. The tolerance for the R88G-HPG50□ and R88G-HPG65□ is h8.

*4. For the R88G-HPG11B series, two set bolts are positioned at an angle of 90° from each other.

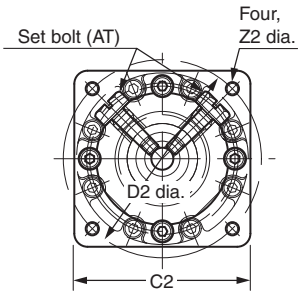

| Dimensions (mm) | | | | | | | | | | | | Model | | |
|---|---|---|---|---|---|---|---|---|---|---|---|---|---|---|
| G | S | T | Z1 | Z2 | AT*1 | Key Dimensions | | | | Tap Dimensions | | | | |
| | | | | | | QK | b | h | t1 | M | L | | | |
| 5 | 8 | 20 | 3.4 | M4 × 9 | M3 | 15 | 3 | 3 | 1.8 | M3 | 6 | **R88G-HPG11B05100B□** | 1/5 | 50W |
| 5 | 8 | 20 | 3.4 | M4 × 9 | M3 | 15 | 3 | 3 | 1.8 | M3 | 6 | **R88G-HPG11B09050B□** | 1/9 | |
| 8 | 16 | 28 | 5.5 | M4 × 10 | M3 | 25 | 5 | 5 | 3 | M4 | 8 | **R88G-HPG14A21100B□** | 1/21 | |
| 8 | 16 | 28 | 5.5 | M4 × 10 | M3 | 25 | 5 | 5 | 3 | M4 | 8 | **R88G-HPG14A33050B□** | 1/33 | |
| 8 | 16 | 28 | 5.5 | M4 × 10 | M3 | 25 | 5 | 5 | 3 | M4 | 8 | **R88G-HPG14A45050B□** | 1/45 | |
| 5 | 8 | 20 | 3.4 | M4 × 9 | M3 | 15 | 3 | 3 | 1.8 | M3 | 6 | **R88G-HPG11B05100B□** | 1/5 | 100W |
| 8 | 16 | 28 | 5.5 | M4 × 10 | M3 | 25 | 5 | 5 | 3 | M4 | 8 | **R88G-HPG14A11100B□** | 1/11 | |
| 8 | 16 | 28 | 5.5 | M4 × 10 | M3 | 25 | 5 | 5 | 3 | M4 | 8 | **R88G-HPG14A21100B□** | 1/21 | |
| 10 | 25 | 42 | 9 | M4 × 10 | M4 | 36 | 8 | 7 | 4 | M6 | 12 | **R88G-HPG20A33100B□** | 1/33 | |
| 10 | 25 | 42 | 9 | M4 × 10 | M4 | 36 | 8 | 7 | 4 | M6 | 12 | **R88G-HPG20A45100B□** | 1/45 | |
| 8 | 16 | 28 | 5.5 | M4 × 10 | M4 | 25 | 5 | 5 | 3 | M4 | 8 | **R88G-HPG14A05200B□** | 1/5 | 200W |
| 8 | 16 | 28 | 5.5 | M4 × 10 | M4 | 25 | 5 | 5 | 3 | M4 | 8 | **R88G-HPG14A11200B□** | 1/11 | |
| 10 | 25 | 42 | 9 | M4 × 10 | M4 | 36 | 8 | 7 | 4 | M6 | 12 | **R88G-HPG20A21200B□** | 1/21 | |
| 10 | 25 | 42 | 9 | M4 × 10 | M4 | 36 | 8 | 7 | 4 | M6 | 12 | **R88G-HPG20A33200B□** | 1/33 | |
| 10 | 25 | 42 | 9 | M4 × 10 | M4 | 36 | 8 | 7 | 4 | M6 | 12 | **R88G-HPG20A45200B□** | 1/45 | |
| 8 | 16 | 28 | 5.5 | M4 × 10 | M4 | 25 | 5 | 5 | 3 | M4 | 8 | **R88G-HPG14A05400B□** | 1/5 | 400W |
| 10 | 25 | 42 | 9 | M4 × 10 | M4 | 36 | 8 | 7 | 4 | M6 | 12 | **R88G-HPG20A11400B□** | 1/11 | |
| 10 | 25 | 42 | 9 | M4 × 10 | M4 | 36 | 8 | 7 | 4 | M6 | 12 | **R88G-HPG20A21400B□** | 1/21 | |
| 13 | 40 | 82 | 11 | M4 × 10 | M4 | 70 | 12 | 8 | 5 | M10 | 20 | **R88G-HPG32A33400B□** | 1/33 | |
| 13 | 40 | 82 | 11 | M4 × 10 | M4 | 70 | 12 | 8 | 5 | M10 | 20 | **R88G-HPG32A45400B□** | 1/45 | |
| 10 | 25 | 42 | 9 | M5 × 12 | M4 | 36 | 8 | 7 | 4 | M6 | 12 | **R88G-HPG20A05750B□** | 1/5 | 750W (200V) |
| 10 | 25 | 42 | 9 | M5 × 12 | M4 | 36 | 8 | 7 | 4 | M6 | 12 | **R88G-HPG20A11750B□** | 1/11 | |
| 13 | 40 | 82 | 11 | M5 × 12 | M6 | 70 | 12 | 8 | 5 | M10 | 20 | **R88G-HPG32A21750B□** | 1/21 | |
| 13 | 40 | 82 | 11 | M5 × 12 | M6 | 70 | 12 | 8 | 5 | M10 | 20 | **R88G-HPG32A33750B□** | 1/33 | |
| 13 | 40 | 82 | 11 | M5 × 12 | M6 | 70 | 12 | 8 | 5 | M10 | 20 | **R88G-HPG32A45750B□** | 1/45 | |

*1. This is the set bolt.

## Outline Drawings 2

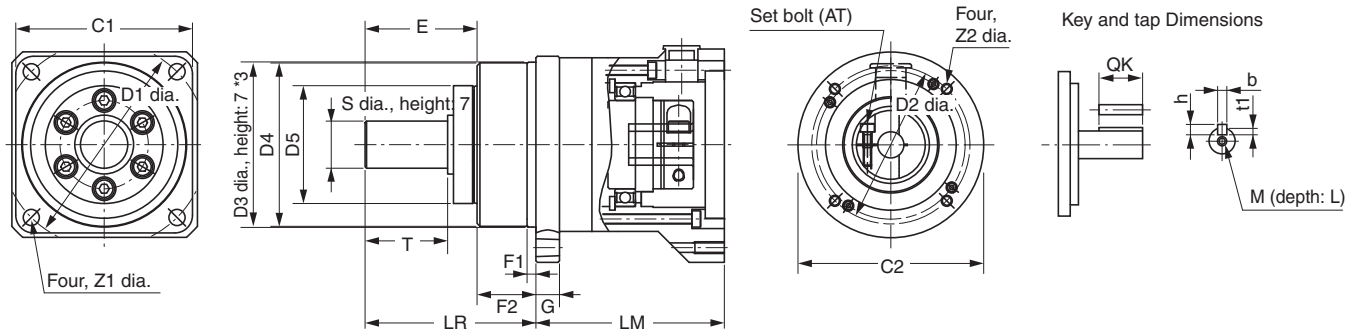


*3. The tolerance for the R88G-HPG50□ and R88G-HPG65□ is h8.

**Backlash: 3 Arcminutes Max.**

**<Cylinder Type>**

### ● 3,000-r/min Servomotors (1 to 5 kW)

| Model | | | Outline Drawings | Dimensions (mm) | | | | | | | | | | | |
|---|---|---|---|---|---|---|---|---|---|---|---|---|---|---|---|
| | | | | LM | LR | C1 | C2 | D1 | D2 | D3 | D4 | D5 | E | F1 | F2 |
| 1kW | 1/5 | R88G-HPG32A052K0B□ | 2 | 110 | 133 | 120 | 135 dia. | 135 | 115 | 115 | 114 | 84 | 98 | 12.5 | 35 |
| | 1/11 | R88G-HPG32A112K0B□ | 2 | 110 | 133 | 120 | 135 dia. | 135 | 115 | 115 | 114 | 84 | 98 | 12.5 | 35 |
| | 1/21 | R88G-HPG32A211K5B□ | 2 | 110 | 133 | 120 | 135 dia. | 135 | 115 | 115 | 114 | 84 | 98 | 12.5 | 35 |
| | 1/33 | R88G-HPG50A332K0B□ | 2 | 123 | 156 | 170 | 170 dia. | 190 | 115 | 165 | 163 | 122 | 103 | 12 | 53 |
| | 1/45 | R88G-HPG50A451K5B□ | 2 | 123 | 156 | 170 | 170 dia. | 190 | 115 | 165 | 163 | 122 | 103 | 12 | 53 |
| 1.5kW | 1/5 | R88G-HPG32A052K0B□ | 2 | 110 | 133 | 120 | 135 dia. | 135 | 115 | 115 | 114 | 84 | 98 | 12.5 | 35 |
| | 1/11 | R88G-HPG32A112K0B□ | 2 | 110 | 133 | 120 | 135 dia. | 135 | 115 | 115 | 114 | 84 | 98 | 12.5 | 35 |
| | 1/21 | R88G-HPG32A211K5B□ | 2 | 110 | 133 | 120 | 135 dia. | 135 | 115 | 115 | 114 | 84 | 98 | 12.5 | 35 |
| | 1/33 | R88G-HPG50A332K0B□ | 2 | 123 | 156 | 170 | 170 dia. | 190 | 115 | 165 | 163 | 122 | 103 | 12 | 53 |
| | 1/45 | R88G-HPG50A451K5B□ | 2 | 123 | 156 | 170 | 170 dia. | 190 | 115 | 165 | 163 | 122 | 103 | 12 | 53 |
| 2kW | 1/5 | R88G-HPG32A052K0B□ | 2 | 110 | 133 | 120 | 135 dia. | 135 | 115 | 115 | 114 | 84 | 98 | 12.5 | 35 |
| | 1/11 | R88G-HPG32A112K0B□ | 2 | 110 | 133 | 120 | 135 dia. | 135 | 115 | 115 | 114 | 84 | 98 | 12.5 | 35 |
| | 1/21 | R88G-HPG50A212K0B□ | 2 | 123 | 156 | 170 | 170 dia. | 190 | 115 | 165 | 163 | 122 | 103 | 12 | 53 |
| | 1/33 | R88G-HPG50A332K0B□ | 2 | 123 | 156 | 170 | 170 dia. | 190 | 115 | 165 | 163 | 122 | 103 | 12 | 53 |
| 3kW | 1/5 | R88G-HPG32A053K0B□ | 1 | 107 | 133 | 120 | 130 × 130 | 135 | 145 | 115 | 114 | 84 | 98 | 12.5 | 35 |
| | 1/11 | R88G-HPG50A113K0B□ | 2 | 123 | 156 | 170 | 170 dia. | 190 | 145 | 165 | 163 | 122 | 103 | 12 | 53 |
| | 1/21 | R88G-HPG50A213K0B□ | 2 | 123 | 156 | 170 | 170 dia. | 190 | 145 | 165 | 163 | 122 | 103 | 12 | 53 |
| 4kW | 1/5 | R88G-HPG32A054K0B□ | 1 | 129 | 133 | 120 | 130 × 130 | 135 | 145 | 115 | 114 | 84 | 98 | 12.5 | 35 |
| | 1/11 | R88G-HPG50A115K0B□ | 1 | 149 | 156 | 170 | 130 × 130 | 190 | 145 | 165 | 163 | 122 | 103 | 12 | 53 |
| 5kW | 1/5 | R88G-HPG50A055K0B□ | 1 | 149 | 156 | 170 | 130 × 130 | 190 | 145 | 165 | 163 | 122 | 103 | 12 | 53 |
| | 1/11 | R88G-HPG50A115K0B□ | 1 | 149 | 156 | 170 | 130 × 130 | 190 | 145 | 165 | 163 | 122 | 103 | 12 | 53 |

**Note: 1.** The standard models have a straight shaft.
**Note: 2.** To order a Decelerator with a straight shaft with key and tap, add "J" to the end of the model number, in the place indicated by the box. (e.g., R88G-HPG32A051K0BJ)
**Note: 3.** The diameter of the motor shaft insertion portion is the same as the diameter of the shaft of the corresponding motor.
**Note: 4.** Applicable for the servomotors with key, if the key is removed.
**Note: 5.** The dimensional drawings in this document are designed to indicate only the main dimensions. They do not necessarily represent the detailed shapes of the products.

### Outline Drawings 1

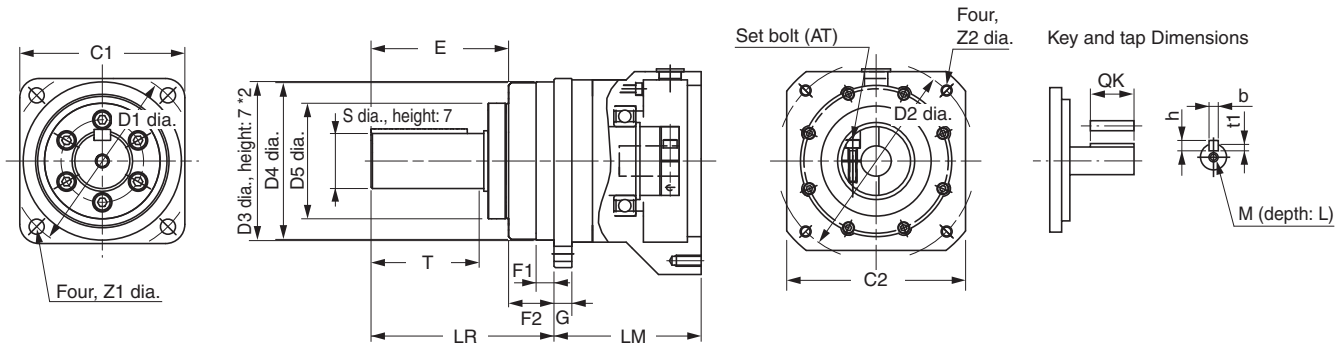


*2. The tolerance for the R88G-HPG50□ and R88G-HPG65□ is h8.

| Dimensions (mm) | | | | | | | | | | | | Model | | |
|---|---|---|---|---|---|---|---|---|---|---|---|---|---|---|
| G | S | T | Z1 | Z2 | AT*1 | Key Dimensions | | | | Tap Dimensions | | | | |
| | | | | | | QK | b | h | t1 | M | L | | | |
| 13 | 40 | 82 | 11 | M8 × 10 | M6 | 70 | 12 | 8 | 5 | M10 | 20 | R88G-HPG32A052K0B□ | 1/5 | 1kW |
| 13 | 40 | 82 | 11 | M8 × 10 | M6 | 70 | 12 | 8 | 5 | M10 | 20 | R88G-HPG32A112K0B□ | 1/11 | |
| 13 | 40 | 82 | 11 | M8 × 10 | M6 | 70 | 12 | 8 | 5 | M10 | 20 | R88G-HPG32A211K5B□ | 1/21 | |
| 16 | 50 | 82 | 14 | M8 × 10 | M6 | 70 | 14 | 9 | 5.5 | M10 | 20 | R88G-HPG50A332K0B□ | 1/33 | |
| 16 | 50 | 82 | 14 | M8 × 10 | M6 | 70 | 14 | 9 | 5.5 | M10 | 20 | R88G-HPG50A451K5B□ | 1/45 | |
| 13 | 40 | 82 | 11 | M8 × 10 | M6 | 70 | 12 | 8 | 5 | M10 | 20 | R88G-HPG32A052K0B□ | 1/5 | 1.5kW |
| 13 | 40 | 82 | 11 | M8 × 10 | M6 | 70 | 12 | 8 | 5 | M10 | 20 | R88G-HPG32A112K0B□ | 1/11 | |
| 13 | 40 | 82 | 11 | M8 × 10 | M6 | 70 | 12 | 8 | 5 | M10 | 20 | R88G-HPG32A211K5B□ | 1/21 | |
| 16 | 50 | 82 | 14 | M8 × 10 | M6 | 70 | 14 | 9 | 5.5 | M10 | 20 | R88G-HPG50A332K0B□ | 1/33 | |
| 16 | 50 | 82 | 14 | M8 × 10 | M6 | 70 | 14 | 9 | 5.5 | M10 | 20 | R88G-HPG50A451K5B□ | 1/45 | |
| 13 | 40 | 82 | 11 | M8 × 10 | M6 | 70 | 12 | 8 | 5 | M10 | 20 | R88G-HPG32A052K0B□ | 1/5 | 2kW |
| 13 | 40 | 82 | 11 | M8 × 10 | M6 | 70 | 12 | 8 | 5 | M10 | 20 | R88G-HPG32A112K0B□ | 1/11 | |
| 16 | 50 | 82 | 14 | M8 × 10 | M6 | 70 | 14 | 9 | 5.5 | M10 | 20 | R88G-HPG50A212K0B□ | 1/21 | |
| 16 | 50 | 82 | 14 | M8 × 10 | M6 | 70 | 14 | 9 | 5.5 | M10 | 20 | R88G-HPG50A332K0B□ | 1/33 | |
| 13 | 40 | 82 | 11 | M8 × 18 | M6 | 70 | 12 | 8 | 5 | M10 | 20 | R88G-HPG32A053K0B□ | 1/5 | 3kW |
| 16 | 50 | 82 | 14 | M8 × 16 | M6 | 70 | 14 | 9 | 5.5 | M10 | 20 | R88G-HPG50A113K0B□ | 1/11 | |
| 16 | 50 | 82 | 14 | M8 × 16 | M6 | 70 | 14 | 9 | 5.5 | M10 | 20 | R88G-HPG50A213K0B□ | 1/21 | |
| 13 | 40 | 82 | 11 | M8 × 25 | M6 | 70 | 12 | 8 | 5 | M10 | 20 | R88G-HPG32A054K0B□ | 1/5 | 4kW |
| 16 | 50 | 82 | 14 | M8 × 25 | M6 | 70 | 14 | 9 | 5.5 | M10 | 20 | R88G-HPG50A115K0B□ | 1/11 | |
| 16 | 50 | 82 | 14 | M8 × 25 | M6 | 70 | 14 | 9 | 5.5 | M10 | 20 | R88G-HPG50A055K0B□ | 1/5 | 5kW |
| 16 | 50 | 82 | 14 | M8 × 25 | M6 | 70 | 14 | 9 | 5.5 | M10 | 20 | R88G-HPG50A115K0B□ | 1/11 | |

*1. This is the set bolt.

## Outline Drawings 2

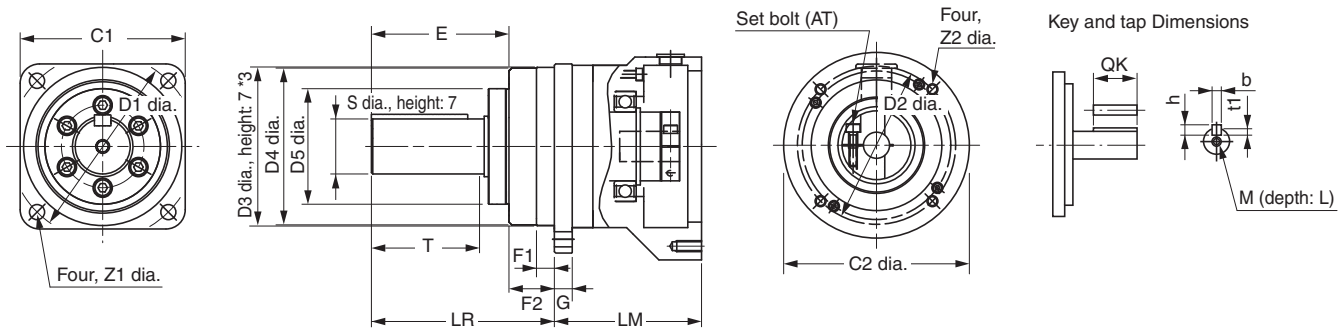


*3. The tolerance for the R88G-HPG50□ and R88G-HPG65□ is h8.

**Backlash: 3 Arcminutes Max.**

**<Flat Servomotors>**

### ● 3,000-r/min Servomotors (100 to 400 W)

| Model | | | Dimensions (mm) | | | | | | | | | | | |
|---|---|---|---|---|---|---|---|---|---|---|---|---|---|---|
| | | | LM | LR | C1 | C2 | D1 | D2 | D3 | D4 | D5 | E | F1 | F2 |
| 100 W | 1/5 | **R88G-HPG11A05100PB** | 39.5 | 42 | 40 | 60×60 | 46 | 70 | 40.0 | 39.5 | 29 | 27 | 2.2 | 15 |
| | 1/11 | **R88G-HPG14A11100PB** | 64.0 | 58 | 60 | 60×60 | 70 | 70 | 56.0 | 55.5 | 40 | 37 | 2.5 | 21 |
| | 1/21 | **R88G-HPG14A21100PB** | 64.0 | 58 | 60 | 60×60 | 70 | 70 | 56.0 | 55.5 | 40 | 37 | 2.5 | 21 |
| | 1/33 | **R88G-HPG20A33100PB** | 71.0 | 80 | 90 | 89 dia. | 105 | 70 | 85.0 | 84.0 | 59 | 53 | 7.5 | 27 |
| | 1/45 | **R88G-HPG20A45100PB** | 71.0 | 80 | 90 | 89 dia. | 105 | 70 | 85.0 | 84.0 | 59 | 53 | 7.5 | 27 |
| 200 W | 1/5 | **R88G-HPG14A05200PB** | 65.0 | 58 | 60 | 80×80 | 70 | 90 | 56.0 | 55.5 | 40 | 37 | 2.5 | 21 |
| | 1/11 | **R88G-HPG20A11200PB** | 78.0 | 80 | 90 | 80×80 | 105 | 90 | 85.0 | 84.0 | 59 | 53 | 7.5 | 27 |
| | 1/21 | **R88G-HPG20A21200PB** | 78.0 | 80 | 90 | 80×80 | 105 | 90 | 85.0 | 84.0 | 59 | 53 | 7.5 | 27 |
| | 1/33 | **R88G-HPG20A33200PB** | 78.0 | 80 | 90 | 80×80 | 105 | 90 | 85.0 | 84.0 | 59 | 53 | 7.5 | 27 |
| | 1/45 | **R88G-HPG20A45200PB** | 78.0 | 80 | 90 | 80×80 | 105 | 90 | 85.0 | 84.0 | 59 | 53 | 7.5 | 27 |
| 400 W | 1/5 | **R88G-HPG20A05400PB** | 78.0 | 80 | 90 | 80×80 | 105 | 90 | 85.0 | 84.0 | 59 | 53 | 7.5 | 27 |
| | 1/11 | **R88G-HPG20A11400PB** | 78.0 | 80 | 90 | 80×80 | 105 | 90 | 85.0 | 84.0 | 59 | 53 | 7.5 | 27 |
| | 1/21 | **R88G-HPG20A21400PB** | 78.0 | 80 | 90 | 80×80 | 105 | 90 | 85.0 | 84.0 | 59 | 53 | 7.5 | 27 |
| | 1/33 | **R88G-HPG32A33400PB** | 104.0 | 133 | 120 | 122 dia. | 135 | 90 | 115.0 | 114.0 | 84 | 98 | 12.5 | 35 |
| | 1/45 | **R88G-HPG32A45400PB** | 104.0 | 133 | 120 | 122 dia. | 135 | 90 | 115.0 | 114.0 | 84 | 98 | 12.5 | 35 |

**Note: 1.** The standard models have a straight shaft.
A model with a key and tap is indicated by adding “J” to the end of the model number.
**Note: 2.** Applicable for the servomotors with key, if the key is removed.

### Outline Drawings

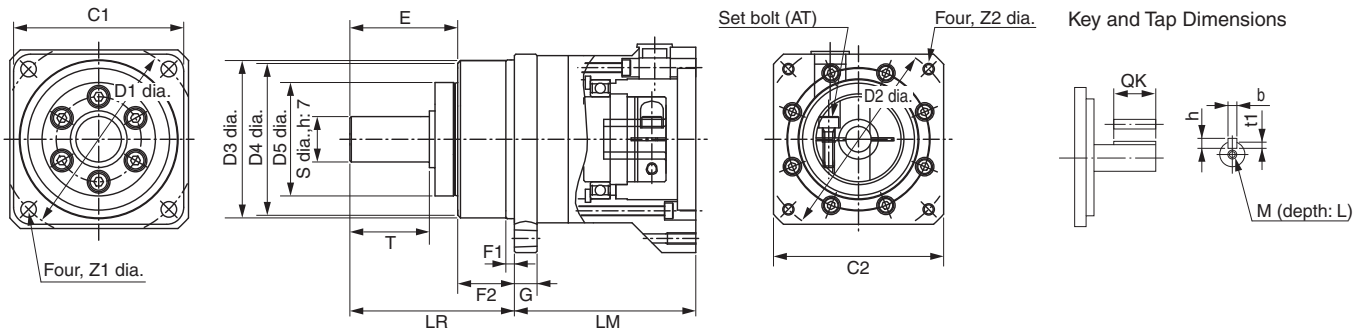

| Dimensions (mm) | | | | | | | | | | | | Model | | |
|---|---|---|---|---|---|---|---|---|---|---|---|---|---|---|
| G | S | T | Z1 | Z2 | AT*1 | Key dimensions | | | | Tap dimensions | | | | |
| | | | | | | QK | b | h | t1 | M | L | | | |
| 5 | 8 | 20 | 3.4 | M4×9 | M3 | 15 | 3 | 3 | 1.8 | M3 | 6 | **R88G-HPG11A05100PB** | 1/5 | 100 W |
| 8 | 16 | 28 | 5.5 | M4×10 | M3 | 25 | 5 | 5 | 3.0 | M4 | 8 | **R88G-HPG14A11100PB** | 1/11 | |
| 8 | 16 | 28 | 5.5 | M4×10 | M3 | 25 | 5 | 5 | 3.0 | M4 | 8 | **R88G-HPG14A21100PB** | 1/21 | |
| 10 | 25 | 42 | 9.0 | M4×10 | M3 | 36 | 8 | 7 | 4.0 | M6 | 12 | **R88G-HPG20A33100PB** | 1/33 | |
| 10 | 25 | 42 | 9.0 | M4×10 | M3 | 36 | 8 | 7 | 4.0 | M6 | 12 | **R88G-HPG20A45100PB** | 1/45 | |
| 8 | 16 | 28 | 5.5 | M5×12 | M4 | 25 | 5 | 5 | 3.0 | M4 | 8 | **R88G-HPG14A05200PB** | 1/5 | 200 W |
| 10 | 25 | 42 | 9.0 | M5×12 | M4 | 36 | 8 | 7 | 4.0 | M6 | 12 | **R88G-HPG20A11200PB** | 1/11 | |
| 10 | 25 | 42 | 9.0 | M5×12 | M4 | 36 | 8 | 7 | 4.0 | M6 | 12 | **R88G-HPG20A21200PB** | 1/21 | |
| 10 | 25 | 42 | 9.0 | M5×12 | M4 | 36 | 8 | 7 | 4.0 | M6 | 12 | **R88G-HPG20A33200PB** | 1/33 | |
| 10 | 25 | 42 | 9.0 | M5×12 | M4 | 36 | 8 | 7 | 4.0 | M6 | 12 | **R88G-HPG20A45200PB** | 1/45 | |
| 10 | 25 | 42 | 9.0 | M5×12 | M4 | 36 | 8 | 7 | 4.0 | M6 | 12 | **R88G-HPG20A05400PB** | 1/5 | 400 W |
| 10 | 25 | 42 | 9.0 | M5×12 | M4 | 36 | 8 | 7 | 4.0 | M6 | 12 | **R88G-HPG20A11400PB** | 1/11 | |
| 10 | 25 | 42 | 9.0 | M5×12 | M4 | 36 | 8 | 7 | 4.0 | M6 | 12 | **R88G-HPG20A21400PB** | 1/21 | |
| 13 | 40 | 82 | 11.0 | M5×12 | M6 | 70 | 12 | 8 | 5.0 | M10 | 20 | **R88G-HPG32A33400PB** | 1/33 | |
| 13 | 40 | 82 | 11.0 | M5×12 | M6 | 70 | 12 | 8 | 5.0 | M10 | 20 | **R88G-HPG32A45400PB** | 1/45 | |

*1. This is the set bolt.

**Backlash: 3 Arcminutes Max.**

**<Cylinder Type>**

### ● 2,000-r/min Servomotors (1 to 7.5 kW)

| Model | | | Outline Drawings | Dimensions (mm) | | | | | | | | | | | |
|---|---|---|---|---|---|---|---|---|---|---|---|---|---|---|---|
| | | | | LM | LR | C1 | C2 | D1 | D2 | D3 | D4 | D5 | E | F1 | F2 |
| 1kW | 1/5 | R88G-HPG32A053K0B□ | 1 | 107 | 133 | 120 | 130 × 130 | 135 | 145 | 115 | 114 | 84 | 98 | 12.5 | 35 |
| | 1/11 | R88G-HPG32A112K0SB□ | 1 | 107 | 133 | 120 | 130 × 130 | 135 | 145 | 115 | 114 | 84 | 98 | 12.5 | 35 |
| | 1/21 | R88G-HPG32A211K0SB□ | 1 | 107 | 133 | 120 | 130 × 130 | 135 | 145 | 115 | 114 | 84 | 98 | 12.5 | 35 |
| | 1/33 | R88G-HPG50A332K0SB□ | 2 | 123 | 156 | 170 | 170 dia. | 190 | 145 | 165 | 163 | 122 | 103 | 12 | 53 |
| | 1/45 | R88G-HPG50A451K0SB□ | 2 | 123 | 156 | 170 | 170 dia. | 190 | 145 | 165 | 163 | 122 | 103 | 12 | 53 |
| 1.5kW | 1/5 | R88G-HPG32A053K0B□ | 1 | 107 | 133 | 120 | 130 × 130 | 135 | 145 | 115 | 114 | 84 | 98 | 12.5 | 35 |
| | 1/11 | R88G-HPG32A112K0SB□ | 1 | 107 | 133 | 120 | 130 × 130 | 135 | 145 | 115 | 114 | 84 | 98 | 12.5 | 35 |
| | 1/21 | R88G-HPG50A213K0B□ | 2 | 123 | 156 | 170 | 170 dia. | 190 | 145 | 165 | 163 | 122 | 103 | 12 | 53 |
| | 1/33 | R88G-HPG50A332K0SB□ | 2 | 123 | 156 | 170 | 170 dia. | 190 | 145 | 165 | 163 | 122 | 103 | 12 | 53 |
| 2kW | 1/5 | R88G-HPG32A053K0B□ | 1 | 107 | 133 | 120 | 130 × 130 | 135 | 145 | 115 | 114 | 84 | 98 | 12.5 | 35 |
| | 1/11 | R88G-HPG32A112K0SB□ | 1 | 107 | 133 | 120 | 130 × 130 | 135 | 145 | 115 | 114 | 84 | 98 | 12.5 | 35 |
| | 1/21 | R88G-HPG50A213K0B□ | 2 | 123 | 156 | 170 | 170 dia. | 190 | 145 | 165 | 163 | 122 | 103 | 12 | 53 |
| | 1/33 | R88G-HPG50A332K0SB□ | 2 | 123 | 156 | 170 | 170 dia. | 190 | 145 | 165 | 163 | 122 | 103 | 12 | 53 |
| 3kW | 1/5 | R88G-HPG32A054K0B□ | 1 | 129 | 133 | 120 | 130 × 130 | 135 | 145 | 115 | 114 | 84 | 98 | 12.5 | 35 |
| | 1/11 | R88G-HPG50A115K0B□ | 1 | 149 | 156 | 170 | 130 × 130 | 190 | 145 | 165 | 163 | 122 | 103 | 12 | 53 |
| | 1/21 | R88G-HPG50A213K0SB□ | 1 | 149 | 156 | 170 | 130 × 130 | 190 | 145 | 165 | 163 | 122 | 103 | 12 | 53 |
| | 1/25 | R88G-HPG65A253K0SB□ | 1 | 231 | 222 | 230 | 130 × 130 | 260 | 145 | 220 | 214 | 168 | 165 | 12 | 57 |
| 4kW | 1/5 | R88G-HPG50A055K0SB□ | 1 | 149 | 156 | 170 | 180 × 180 | 190 | 200 | 165 | 163 | 122 | 103 | 12 | 53 |
| | 1/11 | R88G-HPG50A115K0SB□ | 1 | 149 | 156 | 170 | 180 × 180 | 190 | 200 | 165 | 163 | 122 | 103 | 12 | 53 |
| | 1/20 | R88G-HPG65A205K0SB□ | 1 | 231 | 222 | 230 | 180 × 180 | 260 | 200 | 220 | 214 | 168 | 165 | 12 | 57 |
| | 1/25 | R88G-HPG65A255K0SB□ | 1 | 231 | 222 | 230 | 180 × 180 | 260 | 200 | 220 | 214 | 168 | 165 | 12 | 57 |
| 5kW | 1/5 | R88G-HPG50A055K0SB□ | 1 | 149 | 156 | 170 | 180 × 180 | 190 | 200 | 165 | 163 | 122 | 103 | 12 | 53 |
| | 1/11 | R88G-HPG50A115K0SB□ | 1 | 149 | 156 | 170 | 180 × 180 | 190 | 200 | 165 | 163 | 122 | 103 | 12 | 53 |
| | 1/20 | R88G-HPG65A205K0SB□ | 1 | 231 | 222 | 230 | 180 × 180 | 260 | 200 | 220 | 214 | 168 | 165 | 12 | 57 |
| | 1/25 | R88G-HPG65A255K0SB□ | 1 | 231 | 222 | 230 | 180 × 180 | 260 | 200 | 220 | 214 | 168 | 165 | 12 | 57 |
| 7.5kW | 1/5 | R88G-HPG65A057K5SB□ | 1 | 184.5 | 222 | 230 | 180 × 180 | 260 | 200 | 220 | 214 | 168 | 165 | 12.0 | 57 |
| | 1/12 | R88G-HPG65A127K5SB□ | 1 | 254.5 | 222 | 230 | 180 × 180 | 260 | 200 | 220 | 214 | 168 | 165 | 12.0 | 57 |

**Note: 1.** The standard models have a straight shaft.
**Note: 2.** To order a Decelerator with a straight shaft with key and tap, add "J" to the end of the model number, in the place indicated by the box. (e.g., R88G-HPG32A053K0BJ)
**Note: 3.** The diameter of the motor shaft insertion portion is the same as the diameter of the shaft of the corresponding motor.
**Note: 4.** Applicable for the servomotors with key, if the key is removed.
**Note: 5.** The dimensional drawings in this document are designed to indicate only the main dimensions. They do not necessarily represent the detailed shapes of the products.

### Outline Drawings 1

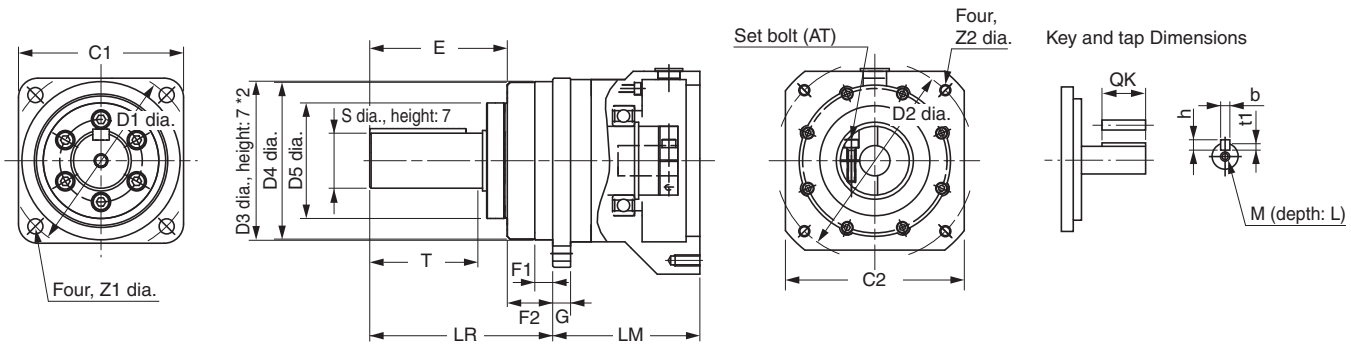


*2. The tolerance for the R88G-HPG50□ and R88G-HPG65□ is h8.

| Dimensions (mm) | | | | | | | | | | | | Model | | |
|---|---|---|---|---|---|---|---|---|---|---|---|---|---|---|
| G | S | T | Z1 | Z2 | AT*1 | Key Dimensions | | | | Tap Dimensions | | | | |
| | | | | | | QK | b | h | t1 | M | L | | | |
| 13 | 40 | 82 | 11 | M8 × 18 | M6 | 70 | 12 | 8 | 5 | M10 | 20 | R88G-HPG32A053K0B□ | 1/5 | 1kW |
| 13 | 40 | 82 | 11 | M8 × 18 | M6 | 70 | 12 | 8 | 5 | M10 | 20 | R88G-HPG32A112K0SB□ | 1/11 | |
| 13 | 40 | 82 | 11 | M8 × 18 | M6 | 70 | 12 | 8 | 5 | M10 | 20 | R88G-HPG32A211K0SB□ | 1/21 | |
| 16 | 50 | 82 | 14 | M8 × 16 | M6 | 70 | 14 | 9 | 5.5 | M10 | 20 | R88G-HPG50A332K0SB□ | 1/33 | |
| 16 | 50 | 82 | 14 | M8 × 16 | M6 | 70 | 14 | 9 | 5.5 | M10 | 20 | R88G-HPG50A451K0SB□ | 1/45 | |
| 13 | 40 | 82 | 11 | M8 × 18 | M6 | 70 | 12 | 8 | 5 | M10 | 20 | R88G-HPG32A053K0B□ | 1/5 | 1.5kW |
| 13 | 40 | 82 | 11 | M8 × 18 | M6 | 70 | 12 | 8 | 5 | M10 | 20 | R88G-HPG32A112K0SB□ | 1/11 | |
| 16 | 50 | 82 | 14 | M8 × 16 | M6 | 70 | 14 | 9 | 5.5 | M10 | 20 | R88G-HPG50A213K0B□ | 1/21 | |
| 16 | 50 | 82 | 14 | M8Å~16 | M6 | 70 | 14 | 9 | 5.5 | M10 | 20 | R88G-HPG50A332K0SB□ | 1/33 | |
| 13 | 40 | 82 | 11 | M8 × 18 | M6 | 70 | 12 | 8 | 5 | M10 | 20 | R88G-HPG32A053K0B□ | 1/5 | 2kW |
| 13 | 40 | 82 | 11 | M8 × 18 | M6 | 70 | 12 | 8 | 5 | M10 | 20 | R88G-HPG32A112K0SB□ | 1/11 | |
| 16 | 50 | 82 | 14 | M8 × 16 | M6 | 70 | 14 | 9 | 5.5 | M10 | 20 | R88G-HPG50A213K0B□ | 1/21 | |
| 16 | 50 | 82 | 14 | M8 × 16 | M6 | 70 | 14 | 9 | 5.5 | M10 | 20 | R88G-HPG50A332K0SB□ | 1/33 | |
| 13 | 40 | 82 | 11 | M8 × 25 | M6 | 70 | 12 | 8 | 5 | M10 | 20 | R88G-HPG32A054K0B□ | 1/5 | 3kW |
| 16 | 50 | 82 | 14 | M8 × 25 | M6 | 70 | 14 | 9 | 5.5 | M10 | 20 | R88G-HPG50A115K0B□ | 1/11 | |
| 16 | 50 | 82 | 14 | M8 × 25 | M6 | 70 | 14 | 9 | 5.5 | M10 | 20 | R88G-HPG50A213K0SB□ | 1/21 | |
| 25 | 80 | 130 | 18 | M8 × 25 | M8 | 110 | 22 | 14 | 9 | M16 | 35 | R88G-HPG65A253K0SB□ | 1/25 | |
| 16 | 50 | 82 | 14 | M12 × 25 | M6 | 70 | 14 | 9 | 5.5 | M10 | 20 | R88G-HPG50A055K0SB□ | 1/5 | 4kW |
| 16 | 50 | 82 | 14 | M12 × 25 | M6 | 70 | 14 | 9 | 5.5 | M10 | 20 | R88G-HPG50A115K0SB□ | 1/11 | |
| 25 | 80 | 130 | 18 | M12 × 25 | M8 | 110 | 22 | 14 | 9 | M16 | 35 | R88G-HPG65A205K0SB□ | 1/20 | |
| 25 | 80 | 130 | 18 | M12 × 25 | M8 | 110 | 22 | 14 | 9 | M16 | 35 | R88G-HPG65A255K0SB□ | 1/25 | |
| 16 | 50 | 82 | 14 | M12 × 25 | M6 | 70 | 14 | 9 | 5.5 | M10 | 20 | R88G-HPG50A055K0SB□ | 1/5 | 5kW |
| 16 | 50 | 82 | 14 | M12 × 25 | M6 | 70 | 14 | 9 | 5.5 | M10 | 20 | R88G-HPG50A115K0SB□ | 1/11 | |
| 25 | 80 | 130 | 18 | M12 × 25 | M8 | 110 | 22 | 14 | 9 | M16 | 35 | R88G-HPG65A205K0SB□ | 1/20 | |
| 25 | 80 | 130 | 18 | M12 × 25 | M8 | 110 | 22 | 14 | 9 | M16 | 35 | R88G-HPG65A255K0SB□ | 1/25 | |
| 25 | 80 | 130 | 18 | M12 × 25 | M8 | 110 | 22 | 14 | 9.0 | M16 | 35 | R88G-HPG65A057K5SB□ | 1/5 | 7.5kW |
| 25 | 80 | 130 | 18 | M12 × 25 | M8 | 110 | 22 | 14 | 9.0 | M16 | 35 | R88G-HPG65A127K5SB□ | 1/12 | |

*1. This is the set bolt.

## Outline Drawings 2

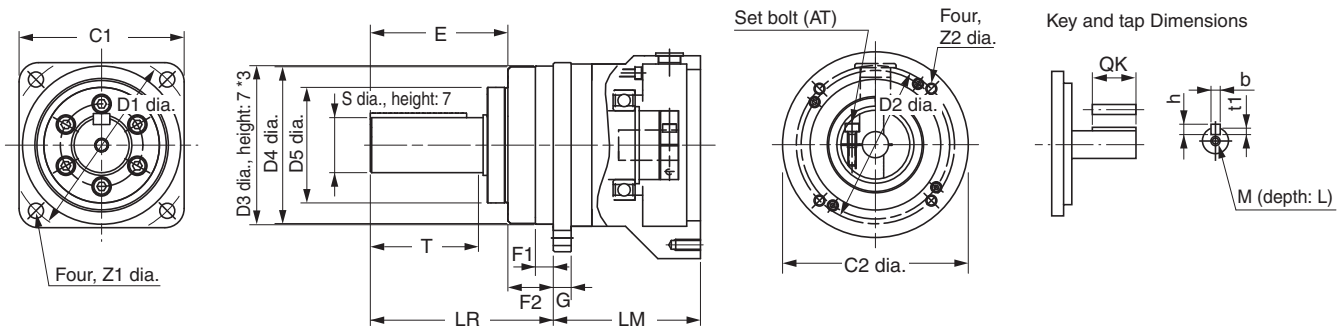


*3. The tolerance for the R88G-HPG50□ and R88G-HPG65□ is h8.

**Backlash: 3 Arcminutes Max.**

**<Cylinder Type>**

### ● 1,000-r/min Servomotors (900 W to 6 kW)

| Model | | | Outline Drawings | Dimensions (mm) | | | | | | | | | | | |
|---|---|---|---|---|---|---|---|---|---|---|---|---|---|---|---|
| | | | | LM | LR | C1 | C2 | D1 | D2 | D3 | D4 | D5 | E | F1 | F2 |
| 900W | 1/5 | R88G-HPG32A05900TB□ | 1 | 129 | 133 | 120 | 130 × 130 | 135 | 145 | 115 | 114 | 84 | 98 | 12.5 | 35 |
| | 1/11 | R88G-HPG32A11900TB□ | 1 | 129 | 133 | 120 | 130 × 130 | 135 | 145 | 115 | 114 | 84 | 98 | 12.5 | 35 |
| | 1/21 | R88G-HPG50A21900TB□ | 1 | 149 | 156 | 170 | 130 × 130 | 190 | 145 | 165 | 163 | 122 | 103 | 12 | 53 |
| | 1/33 | R88G-HPG50A33900TB□ | 1 | 149 | 156 | 170 | 130 × 130 | 190 | 145 | 165 | 163 | 122 | 103 | 12 | 53 |
| 2kW | 1/5 | R88G-HPG32A052K0TB□ | 1 | 129 | 133 | 120 | 180 × 180 | 135 | 200 | 115 | 114 | 84 | 98 | 12.5 | 35 |
| | 1/11 | R88G-HPG50A112K0TB□ | 1 | 149 | 156 | 170 | 180 × 180 | 190 | 200 | 165 | 163 | 122 | 103 | 12 | 53 |
| | 1/21 | R88G-HPG50A212K0TB□ | 1 | 231 | 222 | 230 | 180 × 180 | 260 | 200 | 220 | 214 | 168 | 165 | 12 | 53 |
| | 1/25 | R88G-HPG65A255K0SB□ | 1 | 231 | 222 | 230 | 180 × 180 | 260 | 200 | 220 | 214 | 168 | 165 | 12 | 57 |
| 3kW | 1/5 | R88G-HPG50A055K0SB□ | 1 | 149 | 156 | 170 | 180 × 180 | 190 | 200 | 165 | 163 | 122 | 103 | 12 | 53 |
| | 1/11 | R88G-HPG50A115K0SB□ | 1 | 149 | 156 | 170 | 180 × 180 | 190 | 200 | 165 | 163 | 122 | 103 | 12 | 53 |
| | 1/20 | R88G-HPG65A205K0SB□ | 1 | 231 | 222 | 230 | 180 × 180 | 260 | 200 | 220 | 214 | 168 | 165 | 12 | 57 |
| | 1/25 | R88G-HPG65A255K0SB□ | 1 | 231 | 222 | 230 | 180 × 180 | 260 | 200 | 220 | 214 | 168 | 165 | 12 | 57 |
| 4.5kW | 1/5 | R88G-HPG50A054K5TB□ | 1 | 149 | 156 | 170 | 180 × 180 | 190 | 200 | 165 | 163 | 122 | 103 | 12.0 | 53 |
| | 1/12 | R88G-HPG65A127K5SB□ | 1 | 254.5 | 222 | 230 | 180 × 180 | 260 | 200 | 220 | 214 | 168 | 165 | 12.0 | 57 |
| | 1/20 | R88G-HPG65A204K5TB□ | 1 | 254.5 | 222 | 230 | 180 × 180 | 260 | 200 | 220 | 214 | 168 | 165 | 12.0 | 57 |
| 6kW | 1/5 | R88G-HPG65A057K5SB□ | 1 | 184.5 | 222 | 230 | 180 × 180 | 260 | 200 | 220 | 214 | 168 | 165 | 12.0 | 57 |
| | 1/12 | R88G-HPG65A127K5SB□ | 1 | 254.5 | 222 | 230 | 180 × 180 | 260 | 200 | 220 | 214 | 168 | 165 | 12.0 | 57 |

**Note: 1.** The standard models have a straight shaft.
**Note: 2.** To order a Decelerator with a straight shaft with key and tap, add "J" to the end of the model number, in the place indicated by the box. (e.g., R88G-HPG32A05900TBJ)
**Note: 3.** The diameter of the motor shaft insertion portion is the same as the diameter of the shaft of the corresponding motor.
**Note: 4.** Applicable for the servomotors with key, if the key is removed.
**Note: 5.** The dimensional drawings in this document are designed to indicate only the main dimensions. They do not necessarily represent the detailed shapes of the products.

### Outline Drawings 1

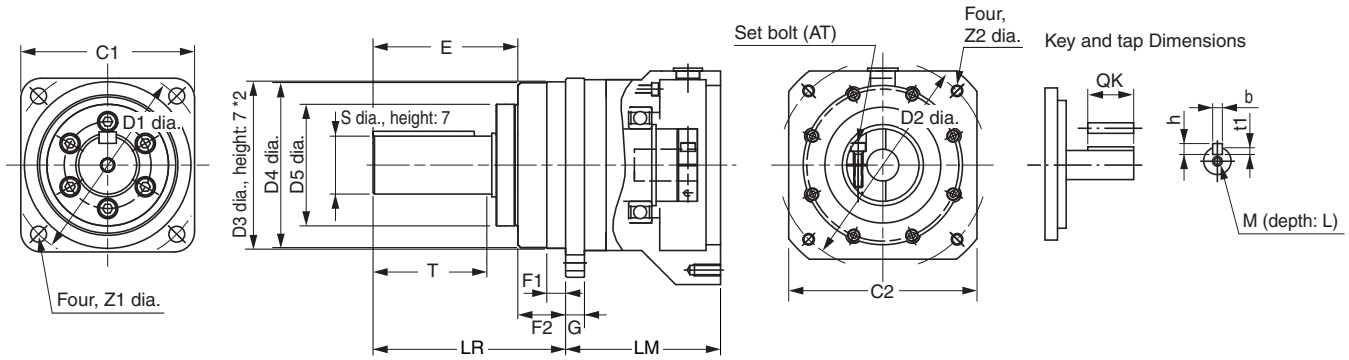


*2. The tolerance for the R88G-HPG50□ and R88G-HPG65□ is h8.

| Dimensions (mm) | | | | | | | | | | | | Model | | |
|---|---|---|---|---|---|---|---|---|---|---|---|---|---|---|
| G | S | T | Z1 | Z2 | AT*1 | Key Dimensions | | | | Tap Dimensions | | | | |
| | | | | | | QK | b | h | t1 | M | L | | | |
| 13 | 40 | 82 | 11 | M8 × 25 | M6 | 70 | 12 | 8 | 5 | M10 | 20 | **R88G-HPG32A05900TB□** | 1/5 | 900W |
| 13 | 40 | 82 | 11 | M8 × 25 | M6 | 70 | 12 | 8 | 5 | M10 | 20 | **R88G-HPG32A11900TB□** | 1/11 | |
| 16 | 50 | 82 | 14 | M8 × 25 | M6 | 70 | 14 | 9 | 5.5 | M10 | 20 | **R88G-HPG50A21900TB□** | 1/21 | |
| 16 | 50 | 82 | 14 | M8 × 25 | M6 | 70 | 14 | 9 | 5.5 | M10 | 20 | **R88G-HPG50A33900TB□** | 1/33 | |
| 13 | 40 | 82 | 11 | M12 × 25 | M6 | 70 | 12 | 8 | 5 | M10 | 20 | **R88G-HPG32A052K0TB□** | 1/5 | 2kW |
| 16 | 50 | 82 | 14 | M12 × 25 | M6 | 70 | 14 | 9 | 5.5 | M10 | 20 | **R88G-HPG50A112K0TB□** | 1/11 | |
| 25 | 80 | 130 | 18 | M12 × 25 | M8 | 110 | 22 | 14 | 9 | M16 | 35 | **R88G-HPG50A212K0TB□** | 1/21 | |
| 25 | 80 | 130 | 18 | M12 × 25 | M8 | 110 | 22 | 14 | 9 | M16 | 35 | **R88G-HPG65A255K0SB□** | 1/25 | |
| 16 | 50 | 82 | 14 | M12 × 25 | M6 | 70 | 14 | 9 | 5.5 | M10 | 20 | **R88G-HPG50A055K0SB□** | 1/5 | 3kW |
| 16 | 50 | 82 | 14 | M12 × 25 | M6 | 70 | 14 | 9 | 5.5 | M10 | 20 | **R88G-HPG50A115K0SB□** | 1/11 | |
| 25 | 80 | 130 | 18 | M12 × 25 | M8 | 110 | 22 | 14 | 9 | M16 | 35 | **R88G-HPG65A205K0SB□** | 1/20 | |
| 25 | 80 | 130 | 18 | M12 × 25 | M8 | 110 | 22 | 14 | 9 | M16 | 35 | **R88G-HPG65A255K0SB□** | 1/25 | |
| 16 | 50 | 82 | 14 | M12 × 25 | M6 | 70 | 14 | 9 | 5.5 | M10 | 20 | **R88G-HPG50A054K5TB□** | 1/5 | 4.5kW |
| 25 | 80 | 130 | 18 | M12 × 25 | M8 | 110 | 22 | 14 | 9 | M16 | 35 | **R88G-HPG65A127K5SB□** | 1/12 | |
| 25 | 80 | 130 | 18 | M12 × 25 | M8 | 110 | 22 | 14 | 9 | M16 | 35 | **R88G-HPG65A204K5TB□** | 1/20 | |
| 25 | 80 | 130 | 18 | M12 × 25 | M8 | 110 | 22 | 14 | 9 | M16 | 35 | **R88G-HPG65A057K5SB□** | 1/5 | 6kW |
| 25 | 80 | 130 | 18 | M12 × 25 | M8 | 110 | 22 | 14 | 9 | M16 | 35 | **R88G-HPG65A127K5SB□** | 1/12 | |

*1. This is the set bolt.

**Backlash: 15 Arcminutes Max.**

**<Cylinder Type>**

### ● 3,000-r/min Servomotors (50 to 750 W)

| Model | | | Dimensions (mm) | | | | | | | | | | |
|---|---|---|---|---|---|---|---|---|---|---|---|---|---|
| | | | LM | LR | C1 | C2 | D1 | D2 | D3 | D4 | E3 | F | G |
| 50 W | 1/5 | R88G-VRSF05B100CJ | 67.5 | 32 | 52 | 40 | 46 | 60 | 50 | 45 | 10 | 3 | 6 |
| | 1/9 | R88G-VRSF09B100CJ | 67.5 | 32 | 52 | 40 | 46 | 60 | 50 | 45 | 10 | 3 | 6 |
| | 1/15 | R88G-VRSF15B100CJ | 78.0 | 32 | 52 | 40 | 46 | 60 | 50 | 45 | 10 | 3 | 6 |
| | 1/25 | R88G-VRSF25B050CJ | 78.0 | 32 | 52 | 40 | 46 | 60 | 50 | 45 | 10 | 3 | 6 |
| 100 W | 1/5 | R88G-VRSF05B100CJ | 67.5 | 32 | 52 | 40 | 46 | 60 | 50 | 45 | 10 | 3 | 6 |
| | 1/9 | R88G-VRSF09B100CJ | 67.5 | 32 | 52 | 40 | 46 | 60 | 50 | 45 | 10 | 3 | 6 |
| | 1/15 | R88G-VRSF15B100CJ | 78.0 | 32 | 52 | 40 | 46 | 60 | 50 | 45 | 10 | 3 | 6 |
| | 1/25 | R88G-VRSF25B100CJ | 78.0 | 32 | 52 | 40 | 46 | 60 | 50 | 45 | 10 | 3 | 6 |
| 200 W | 1/5 | R88G-VRSF05B200CJ | 72.5 | 32 | 52 | 60 | 70 | 60 | 50 | 45 | 10 | 3 | 10 |
| | 1/9 | R88G-VRSF09C200CJ | 89.5 | 50 | 78 | 60 | 70 | 90 | 70 | 62 | 17 | 3 | 8 |
| | 1/15 | R88G-VRSF15C200CJ | 100.0 | 50 | 78 | 60 | 70 | 90 | 70 | 62 | 17 | 3 | 8 |
| | 1/25 | R88G-VRSF25C200CJ | 100.0 | 50 | 78 | 60 | 70 | 90 | 70 | 62 | 17 | 3 | 8 |
| 400 W | 1/5 | R88G-VRSF05C400CJ | 89.5 | 50 | 78 | 60 | 70 | 90 | 70 | 62 | 17 | 3 | 8 |
| | 1/9 | R88G-VRSF09C400CJ | 89.5 | 50 | 78 | 60 | 70 | 90 | 70 | 62 | 17 | 3 | 8 |
| | 1/15 | R88G-VRSF15C400CJ | 100.0 | 50 | 78 | 60 | 70 | 90 | 70 | 62 | 17 | 3 | 8 |
| | 1/25 | R88G-VRSF25C400CJ | 100.0 | 50 | 78 | 60 | 70 | 90 | 70 | 62 | 17 | 3 | 8 |
| 750 W | 1/5 | R88G-VRSF05C750CJ | 93.5 | 50 | 78 | 80 | 90 | 90 | 70 | 62 | 17 | 3 | 10 |
| | 1/9 | R88G-VRSF09D750CJ | 97.5 | 61 | 98 | 80 | 90 | 115 | 90 | 75 | 18 | 5 | 10 |
| | 1/15 | R88G-VRSF15D750CJ | 110.0 | 61 | 98 | 80 | 90 | 115 | 90 | 75 | 18 | 5 | 10 |
| | 1/25 | R88G-VRSF25D750CJ | 110.0 | 61 | 98 | 80 | 90 | 115 | 90 | 75 | 18 | 5 | 10 |

**Note: 1.** The standard models have a straight shaft with a key.
**Note: 2.** The diameter of the motor shaft insertion portion is the same as the diameter of the shaft of the corresponding motor.
**Note: 3.** Applicable for the servomotors with key, if the key is removed.

### Outline Drawings

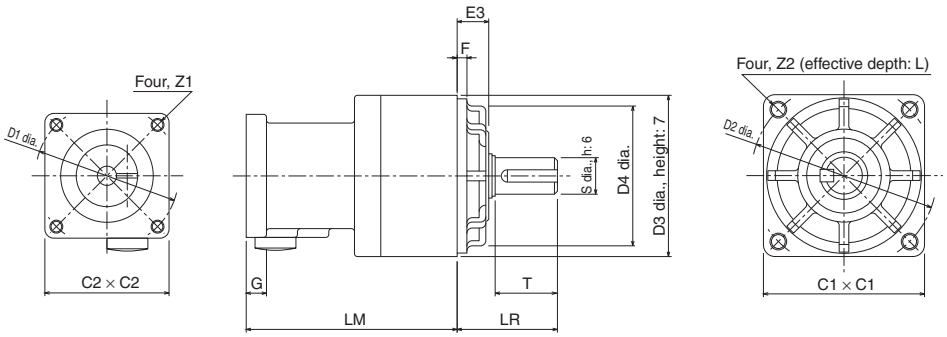

| Dimensions (mm) | | | | | | | | | | Model | | |
|---|---|---|---|---|---|---|---|---|---|---|---|---|
| S | T | Z1 | Z2 | AT | L | Key dimensions | | | | | | |
| | | | | | | QK | b | h | t1 | | | |
| 12 | 20 | M4 | M5 | M3 | 12 | 16 | 4 | 4 | 2.5 | **R88G-VRSF05B100CJ** | 1/5 | 50 W |
| 12 | 20 | M4 | M5 | M3 | 12 | 16 | 4 | 4 | 2.5 | **R88G-VRSF09B100CJ** | 1/9 | |
| 12 | 20 | M4 | M5 | M3 | 12 | 16 | 4 | 4 | 2.5 | **R88G-VRSF15B100CJ** | 1/15 | |
| 12 | 20 | M4 | M5 | M3 | 12 | 16 | 4 | 4 | 2.5 | **R88G-VRSF25B050CJ** | 1/25 | |
| 12 | 20 | M4 | M5 | M3 | 12 | 16 | 4 | 4 | 2.5 | **R88G-VRSF05B100CJ** | 1/5 | 100 W |
| 12 | 20 | M4 | M5 | M3 | 12 | 16 | 4 | 4 | 2.5 | **R88G-VRSF09B100CJ** | 1/9 | |
| 12 | 20 | M4 | M5 | M3 | 12 | 16 | 4 | 4 | 2.5 | **R88G-VRSF15B100CJ** | 1/15 | |
| 12 | 20 | M4 | M5 | M3 | 12 | 16 | 4 | 4 | 2.5 | **R88G-VRSF25B100CJ** | 1/25 | |
| 12 | 20 | M5 | M5 | M4 | 12 | 16 | 4 | 4 | 2.5 | **R88G-VRSF05B200CJ** | 1/5 | 200 W |
| 19 | 30 | M5 | M6 | M4 | 20 | 22 | 6 | 6 | 3.5 | **R88G-VRSF09C200CJ** | 1/9 | |
| 19 | 30 | M5 | M6 | M4 | 20 | 22 | 6 | 6 | 3.5 | **R88G-VRSF15C200CJ** | 1/15 | |
| 19 | 30 | M5 | M6 | M4 | 20 | 22 | 6 | 6 | 3.5 | **R88G-VRSF25C200CJ** | 1/25 | |
| 19 | 30 | M5 | M6 | M4 | 20 | 22 | 6 | 6 | 3.5 | **R88G-VRSF05C400CJ** | 1/5 | 400 W |
| 19 | 30 | M5 | M6 | M4 | 20 | 22 | 6 | 6 | 3.5 | **R88G-VRSF09C400CJ** | 1/9 | |
| 19 | 30 | M5 | M6 | M4 | 20 | 22 | 6 | 6 | 3.5 | **R88G-VRSF15C400CJ** | 1/15 | |
| 19 | 30 | M5 | M6 | M4 | 20 | 22 | 6 | 6 | 3.5 | **R88G-VRSF25C400CJ** | 1/25 | |
| 19 | 30 | M5 | M6 | M4 | 20 | 22 | 6 | 6 | 3.5 | **R88G-VRSF05C750CJ** | 1/5 | 750 W |
| 24 | 40 | M5 | M8 | M4 | 20 | 30 | 8 | 7 | 4 | **R88G-VRSF09D750CJ** | 1/9 | |
| 24 | 40 | M5 | M8 | M4 | 20 | 30 | 8 | 7 | 4 | **R88G-VRSF15D750CJ** | 1/15 | |
| 24 | 40 | M5 | M8 | M4 | 20 | 30 | 8 | 7 | 4 | **R88G-VRSF25D750CJ** | 1/25 | |

## Outline Drawings

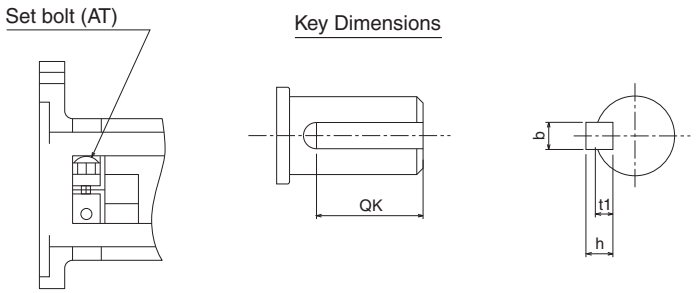

**Backlash: 15 Arcminutes Max.**

**<Flat Servomotors>**

**● 3,000-r/min Servomotors (100 to 400 W)**

| Model | | | Dimensions (mm) | | | | | | | | | | |
|---|---|---|---|---|---|---|---|---|---|---|---|---|---|
| | | | LM | LR | C1 | C2 | D1 | D2 | D3 | D4 | E3 | F | G |
| 100 W | 1/5 | **R88G-VRSF05B100PCJ** | 67.5 | 32 | 52 | 60 | 70 | 60 | 50 | 45 | 10 | 3 | 8 |
| | 1/9 | **R88G-VRSF09B100PCJ** | 67.5 | 32 | 52 | 60 | 70 | 60 | 50 | 45 | 10 | 3 | 8 |
| | 1/15 | **R88G-VRSF15B100PCJ** | 78.0 | 32 | 52 | 60 | 70 | 60 | 50 | 45 | 10 | 3 | 8 |
| | 1/25 | **R88G-VRSF25B100PCJ** | 78.0 | 32 | 52 | 60 | 70 | 60 | 50 | 45 | 10 | 3 | 8 |
| 200 W | 1/5 | **R88G-VRSF05B200PCJ** | 72.5 | 32 | 52 | 80 | 90 | 60 | 50 | 45 | 10 | 3 | 12 |
| | 1/9 | **R88G-VRSF09C200PCJ** | 89.5 | 50 | 78 | 80 | 90 | 90 | 70 | 62 | 17 | 3 | 12 |
| | 1/15 | **R88G-VRSF15C200PCJ** | 100.0 | 50 | 78 | 80 | 90 | 90 | 70 | 62 | 17 | 3 | 12 |
| | 1/25 | **R88G-VRSF25C200PCJ** | 100.0 | 50 | 78 | 80 | 90 | 90 | 70 | 62 | 17 | 3 | 12 |
| 400 W | 1/5 | **R88G-VRSF05C400PCJ** | 89.5 | 50 | 78 | 80 | 90 | 90 | 70 | 62 | 17 | 3 | 12 |
| | 1/9 | **R88G-VRSF09C400PCJ** | 89.5 | 50 | 78 | 80 | 90 | 90 | 70 | 62 | 17 | 3 | 12 |
| | 1/15 | **R88G-VRSF15C400PCJ** | 100.0 | 50 | 78 | 80 | 90 | 90 | 70 | 62 | 17 | 3 | 12 |
| | 1/25 | **R88G-VRSF25C400PCJ** | 100.0 | 50 | 78 | 80 | 90 | 90 | 70 | 62 | 17 | 3 | 12 |

**Note: 1.** The standard models have a straight shaft with a key.
**Note: 2.** Applicable for the servomotors with key, if the key is removed.

## Outline Drawings

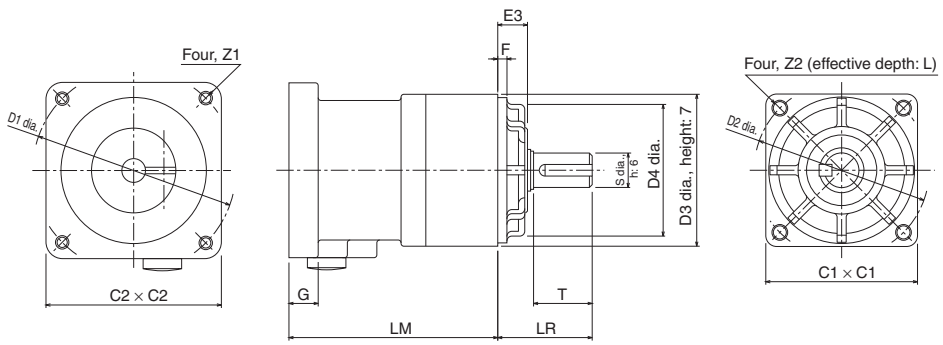

| | Dimensions (mm) | | | | | | | | | | Model | | |
|---|---|---|---|---|---|---|---|---|---|---|---|---|---|
| | S | T | Z1 | Z2 | AT | L | Key dimensions | | | | | | |
| | | | | | | | QK | b | h | t1 | | | |
| | 12 | 20 | M4 | M5 | M3 | 12 | 16 | 4 | 4 | 2.5 | **R88G-VRSF05B100PCJ** | 1/5 | 100 W |
| | 12 | 20 | M4 | M5 | M3 | 12 | 16 | 4 | 4 | 2.5 | **R88G-VRSF09B100PCJ** | 1/9 | |
| | 12 | 20 | M4 | M5 | M3 | 12 | 16 | 4 | 4 | 2.5 | **R88G-VRSF15B100PCJ** | 1/15 | |
| | 12 | 20 | M4 | M5 | M3 | 12 | 16 | 4 | 4 | 2.5 | **R88G-VRSF25B100PCJ** | 1/25 | |
| | 12 | 20 | M5 | M5 | M4 | 12 | 16 | 4 | 4 | 2.5 | **R88G-VRSF05B200PCJ** | 1/5 | 200 W |
| | 19 | 30 | M5 | M6 | M4 | 20 | 22 | 6 | 6 | 3.5 | **R88G-VRSF09C200PCJ** | 1/9 | |
| | 19 | 30 | M5 | M6 | M4 | 20 | 22 | 6 | 6 | 3.5 | **R88G-VRSF15C200PCJ** | 1/15 | |
| | 19 | 30 | M5 | M6 | M4 | 20 | 22 | 6 | 6 | 3.5 | **R88G-VRSF25C200PCJ** | 1/25 | |
| | 19 | 30 | M5 | M6 | M4 | 20 | 22 | 6 | 6 | 3.5 | **R88G-VRSF05C400PCJ** | 1/5 | 400 W |
| | 19 | 30 | M5 | M6 | M4 | 20 | 22 | 6 | 6 | 3.5 | **R88G-VRSF09C400PCJ** | 1/9 | |
| | 19 | 30 | M5 | M6 | M4 | 20 | 22 | 6 | 6 | 3.5 | **R88G-VRSF15C400PCJ** | 1/15 | |
| | 19 | 30 | M5 | M6 | M4 | 20 | 22 | 6 | 6 | 3.5 | **R88G-VRSF25C400PCJ** | 1/25 | |

## Outline Drawings

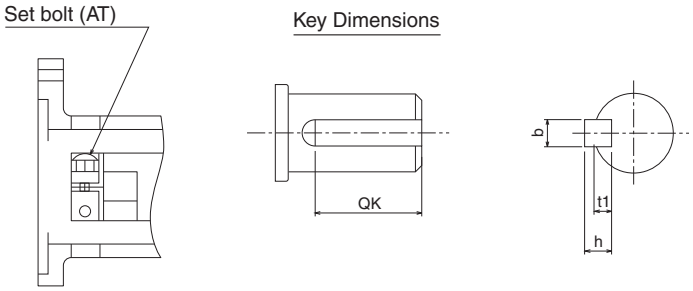

## ● Parameter Unit

**R88A-PR02G**

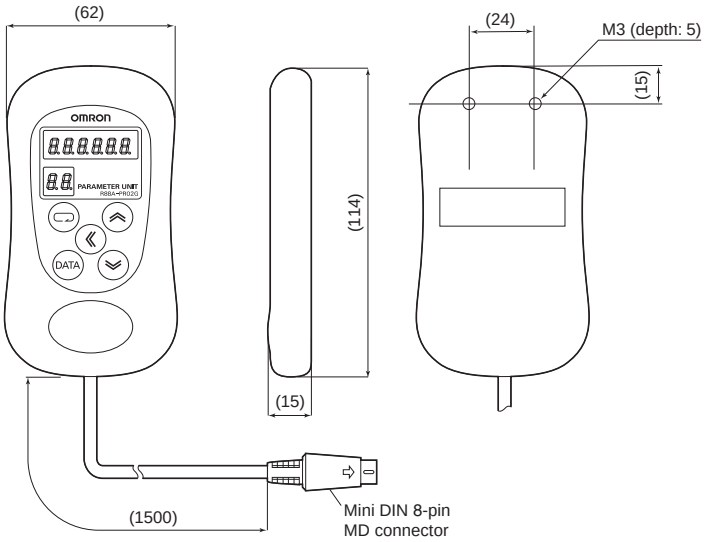


## ● External Regeneration Resistor

**R88A-RR22047S1**

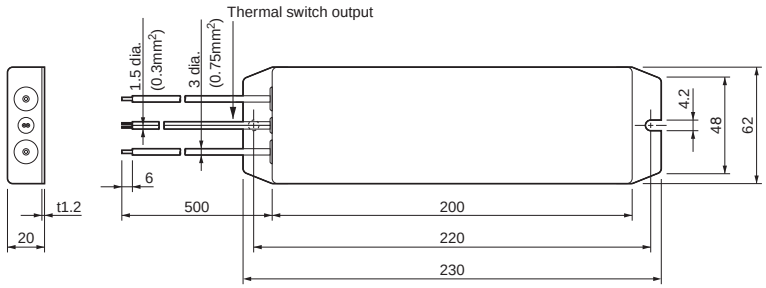


**R88A-RR08050S/-RR080100S**

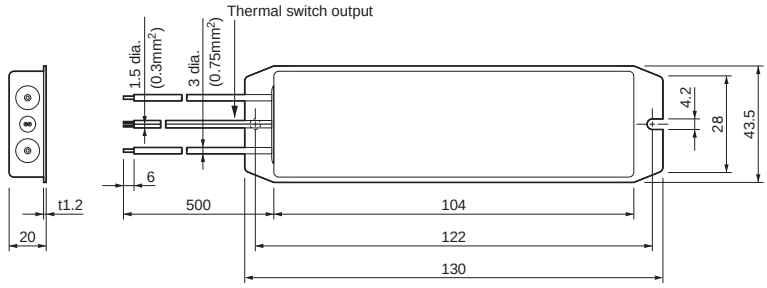


**R88A-RR50020S**

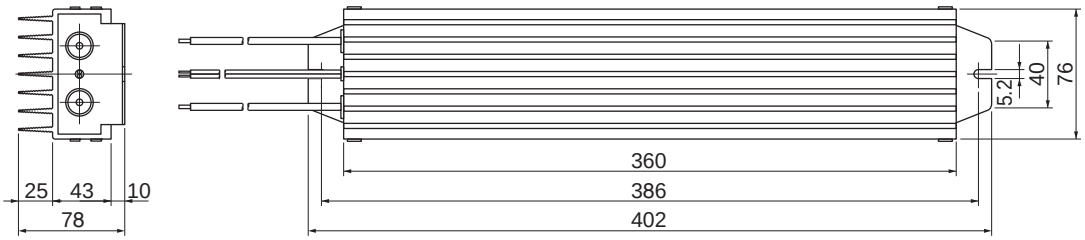

## ● Reactor

### 3G3AX-DL2002
### 3G3AX-DL2004

| Model | L |
|---|---|
| 3G3AX-DL2002 | 85 |
| 3G3AX-DL2004 | 95 |

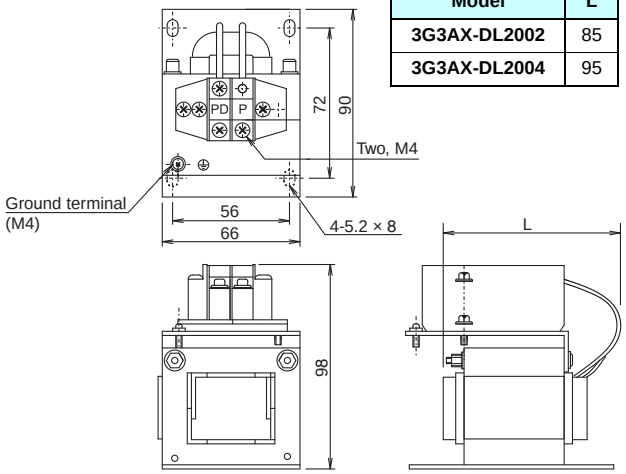


### 3G3AX-DL2007
### 3G3AX-DL2015

| Model | L |
|---|---|
| 3G3AX-DL2007 | 105 |
| 3G3AX-DL2015 | 115 |

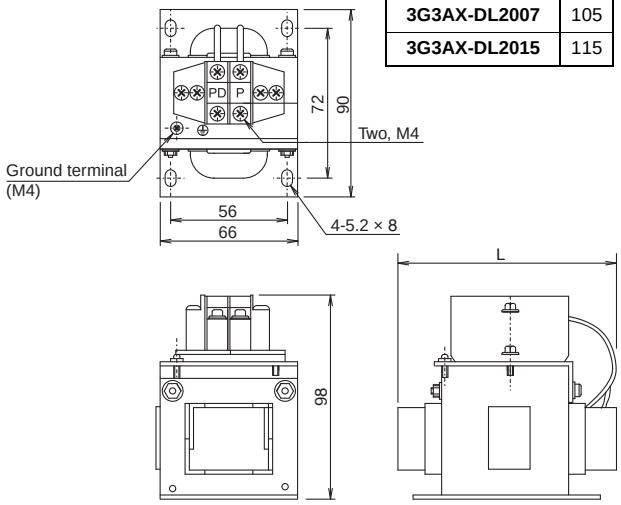


### 3G3AX-DL2022

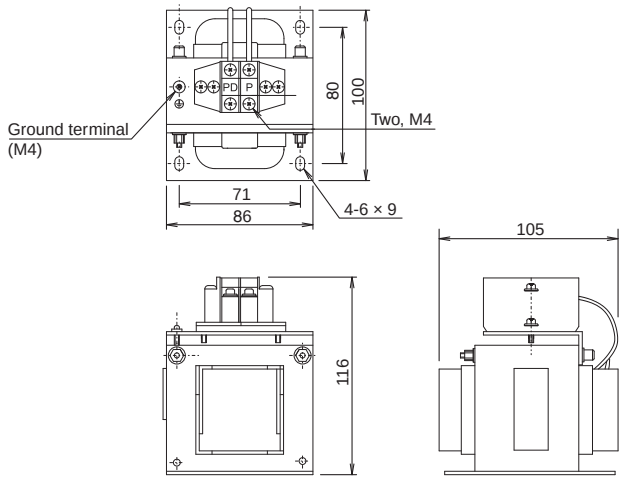


### 3G3AX-AL2025
### 3G3AX-AL2055

| Model | A | C | Y |
|---|---|---|---|
| 3G3AX-AL2025 | 120 | 82 | 67 |
| 3G3AX-AL2055 | 120 | 98 | 75 |

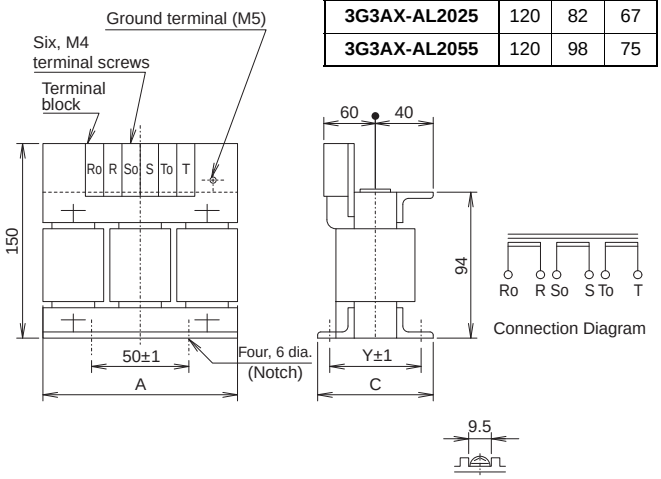


### 3G3AX-AL2110
### 3G3AX-AL2220

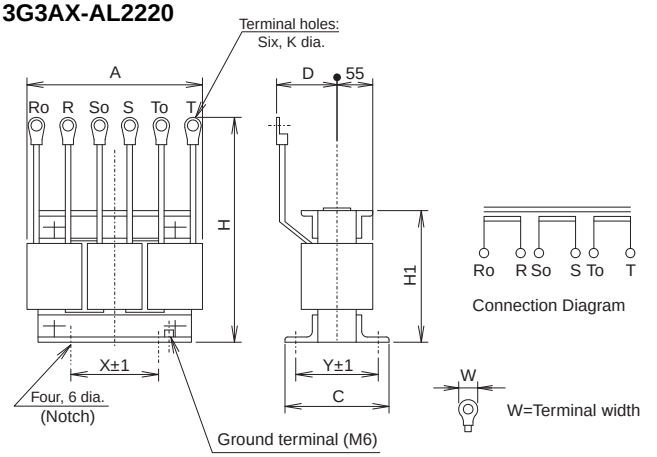


| Model | A | C | D | H | H1 | X | Y | K | W |
|---|---|---|---|---|---|---|---|---|---|
| 3G3AX-AL2110 | 150 | 103 | 70 | 170 | 108 | 60 | 80 | 5.3 | 12 |
| 3G3AX-AL2220 | 180 | 113 | 75 | 190 | 140 | 90 | 90 | 8.4 | 16.5 |

## About Manuals

| English Cat. No. | Japanese Cat. No. | Type | Name |
|---|---|---|---|
| I562 | SBCE-349 | R88M-G/R88D-GT | G-series AC Servomotors/Servo Drives with General-purpose Pulse-string or Analog Inputs User's Manual |
| W453 | SBCE-337 | CXONE-□□□□C-V□/<br>CXONE-□□□□D-V□ | CX-Drive OPERATION MANUAL |

G-series AC Servomotors/Servo Drives with Built-in MECHATROLINK-II Communications

# R88M-G/R88D-GN□-ML2

## Saves Space and Enables MECHATROLINK-II Communications with the Controller.

- Data transfer using MECHATROLINK-Ⅱ (See Note 1) Communications:
  All control data that can be interfaced between the Servo Driver and the Controller is transmitted using data communications. This enables maximizing the Servomotor performance without restricting the transmission performance of the control signals.
- Having a communications module built into the Servo Driver significantly saves space in the control panel.

**Note: 1.** MECHATROLINK-II is a registered trademark of the MECHATROLINK Members Association.
**Note: 2.** CX-Drive (version 1.62) support for G-series Servo Drivers with MECHATROLINK-II Communications can be obtained by using the CX-One V2/V3 auto-update function from July 31, 2008.

## System Configuration

### Controllers

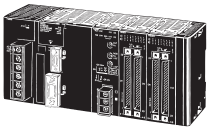

CJ-series PLC

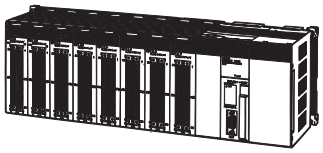

CS-series PLC

- **Position Control Unit**

CJ1W-NCF71

CS1W-NCF71

### Monitor Software

**CX-Drive**
See Note 2

### Parameter Unit

**R88A-PR02G**

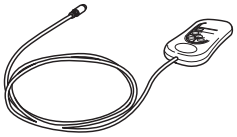

### Personal Computer Monitor Cable

**R88A-CCG002P2**

**MECHATROLINK-Ⅱ**

### MECHATROLINK-Ⅱ Cables

**(With ring core and USB connector on both ends)**
**FNY-W6003-□□ (OMRON model number)**

### MECHATROLINK-Ⅱ Repeater

| Number of connected devices | Maximum transmission distance | | |
|---|---|---|---|
| | 0 to 30 m | 30 to 50 m | 50 to 100 m |
| 1 to 15 | Repeater not required. | Repeater not required. | Repeater required. |
| 16 | Repeater not required. | Repeater required. | Repeater required. |

### Support Software

- **CX-One FA Integrated Tool Package (for Ver.2.0) (Including CX-Motion-NCF** (See Note 3) **and CX-Drive)**

Note 3. The CX-Motion-NCF is supported from version 1.6.

## AC Servo Drives

- G-series
  AC Servo Drive
  R88D-GN□□-ML2

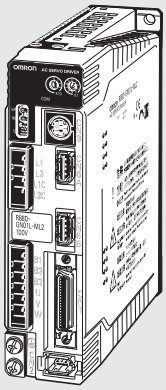

## I/O signals

## Power Cables

- Standard Cables
  Without Brake
  R88A-CAG□□□□S
  With Brake
  R88A-CAG□□□□B
- Robot Cable
  Without Brakes
  R88A-CAG□□□□SR
  With Brake
  R88A-CAG□□□□BR

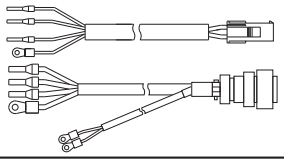

## Connector-Terminal Block Conversion Units and Cable

- Connector-Terminal Block Conversion Unit
  XW2□-20G□

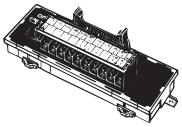

- Cable
  XW2Z-□□□J-B33

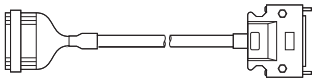

## Motor power signals

## feedback signals

## Encoder Cables

- Standard Cables
  50 W to 750 W
  R88A-CRG□□□□C
  900 W to 7.5 kW
  R88A-CRGC□□□N
- Robot Cables
  50 W to 750 W
  R88A-CRG□□□□CR
  900 W to 7.5 kW
  R88A-CRGC□□□NR

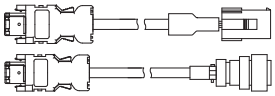

## AC Servomotors

- Model without Decelerators
  R88M-G

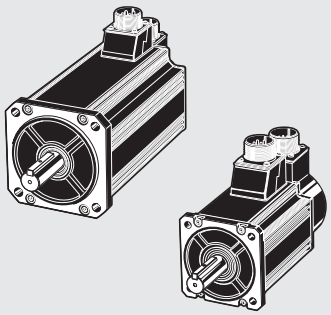

## Peripheral Devices

- Reactors
  3G3AX-DL
  3G3AX-AL
- External Regeneration Resistors
  R88A-RR

## Absolute Encoder Battery Cable

R88A-CRGD0R3C (-BS)

(One Battery is included with Servo Drivers with model numbers ending in "BS.")

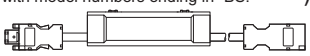

*Not required if a battery is connected to the control connector (CN1).

## Decelerators

- Backlash: 3 Arcminutes Max.
  R88G-HPG
  Backlash: 15 Arcminutes Max.
  R88G-VRSF

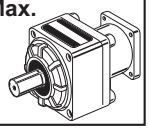

## Interpreting Model Numbers

### ● Servo Driver Model Numbers

The model number provides information such as the Servo Drive type, the applicable Servomotor capacity, and the power supply voltage.

**R88D-GN01H-ML2**

G-series Servo Drive

Drive Type
- N: Network type

Applicable Servomotor Capacity
- A5: 50 W
- 01: 100 W
- 02: 200 W
- 04: 400 W
- 08: 750 W
- 10: 1 kW
- 15: 1.5 kW
- 20: 2 kW
- 30: 3 kW
- 50: 5 kW
- 75: 7.5 kW

Power Supply Voltage
- L: 100 VAC
- H: 200 VAC

Network type
- ML2: MECHATROLINK-II Communications

### ● Servomotor Model Numbers

**R88M-GP10030H-BOS2**

G-series Servomotor

Motor Type
- Blank: Cylinder type
- P: Flat type

Servomotor Capacity
- 050: 50 W
- 100: 100 W
- 200: 200 W
- 400: 400 W
- 750: 750 W
- 900: 900 W
- 1K0: 1 kW
- 1K5: 1.5 kW
- 2K0: 2 kW
- 3K0: 3 kW
- 4K0: 4 kW
- 4K5: 4.5 kW
- 5K0: 5 kW
- 6K0: 6 kW
- 7K5: 7.5 kW

Rated Rotation Speed
- 10: 1,000 r/min
- 15: 1,500 r/min
- 20: 2,000 r/min
- 30: 3,000 r/min

Applied Voltage
- H: 200 VAC with incremental encoder specifications
- L: 100 VAC with incremental encoder specifications
- T: 200 VAC with absolute encoder specifications
- S: 100 VAC with absolute encoder specifications

Option
- Blank: Straight shaft
- B: With brake
- O: With oil seal
- S2: Withkey and tap

## ● Understanding Decelerator Model Numbers

**Backlash = 3' Max.**

R88G-HPG14A05100PBJ

Decelerator for
G-Series Servomotors
Backlash = 3' Max.

Flange Size Number
- 11A :□40
- 14A :□60
- 20A :□90
- 32A :□120
- 50A :□170
- 65A :□230

Gear Ratio
- 05 :1/5
- 09 :1/9 (only frame number 11A)
- 11 :1/11 (except frame number 65A)
- 12 :1/12 (only frame number 65A)
- 20 :1/20 (only frame number 65A)
- 21 :1/21 (except frame number 65A)
- 25 :1/25 (only frame number 65A)
- 33 :1/33
- 45 :1/45

Applicable Servomotor Capacity
- 050 : 50 W
- 100 :100 W
- 200 :200 W
- 400 :400 W
- 750 :750 W
- 900 :900 W
- 1K0 :1 kW
- 1K5 :1.5 kW
- 2K0 :2 kW
- 3K0 :3 kW
- 4K0 :4 kW
- 4K5 :4.5 kW
- 5K0 :5 kW
- 6K0 :6 kW
- 7K5 :7 kW

Motor Type
- Blank :3,000-r/min cylindrical servomotors
- P :flat servomotors
- S :2,000-r/min servomotors
- T :1,000-r/min servomotors

Backlash
- B :3' max.

Option
- Blank :Straight shaft
- J :With key and tap

**Backlash = 15' Max.**

R88G-VRSF09B100PCJ

Decelerator for
G-Series Servomotors
Backlash = 15' Max.

Gear Ratio
- 05 :1/5
- 09 :1/9
- 15 :1/15
- 25 :1/25

Flange Size Number
- B :□52
- C :□78
- D :□98

Applicable Servomotor Capacity
- 050 : 50 W
- 100 :100 W
- 200 :200 W
- 400 :400 W
- 750 :750 W

Motor Type
- Blank :3,000-r/min cylindrical servomotors
- P :flat servomotors

Backlash
- C :15' max.

Option
- J :With key and tap

## Ordering Information

### ● Servo Drives

| Specifications | | Model |
|---|---|---|
| Single-phase 100 VAC | 50 W | **R88D-GNA5L-ML2** |
| | 100 W | **R88D-GN01L-ML2** |
| | 200 W | **R88D-GN02L-ML2** |
| | 400 W | **R88D-GN04L-ML2** |
| Single-phase 200 VAC | 50 W | **R88D-GN01H-ML2** |
| | 100 W | |
| | 200 W | **R88D-GN02H-ML2** |
| | 400 W | **R88D-GN04H-ML2** |
| Single-phase/three-phase 200 VAC | 750 W | **R88D-GN08H-ML2** |
| | 1 kW | **R88D-GN10H-ML2** |
| | 900 W | **R88D-GN15H-ML2** |
| | 1 kW | |
| | 1.5 kW | |
| Three-phase 200 VAC | 2 kW | **R88D-GN20H-ML2** |
| | 2 kW | **R88D-GN30H-ML2** |
| | 3 kW | |
| | 3 kW | **R88D-GN50H-ML2** |
| | 4 kW | |
| | 4.5 kW | |
| | 5 kW | |
| | 6 kW | **R88D-GN75H-ML2** |
| | 7.5 kW | |

## ● Servomotors

### INC 3,000-r/min Cylindrical Servomotors

| Specifications | | | Model | |
|---|---|---|---|---|
| | | | Straight shaft | Straight shaft with key and tap |
| Without brake | 100 V | 50 W | R88M-G05030H | R88M-G05030H-S2 |
| | | 100 W | R88M-G10030L | R88M-G10030L-S2 |
| | | 200 W | R88M-G20030L | R88M-G20030L-S2 |
| | | 400 W | R88M-G40030L | R88M-G40030L-S2 |
| | 200 V | 50 W | R88M-G05030H | R88M-G05030H-S2 |
| | | 100 W | R88M-G10030H | R88M-G10030H-S2 |
| | | 200 W | R88M-G20030H | R88M-G20030H-S2 |
| | | 400 W | R88M-G40030H | R88M-G40030H-S2 |
| | | 750 W | R88M-G75030H | R88M-G75030H-S2 |
| With brake | 100 V | 50 W | R88M-G05030H-B | R88M-G05030H-BS2 |
| | | 100 W | R88M-G10030L-B | R88M-G10030L-BS2 |
| | | 200 W | R88M-G20030L-B | R88M-G20030L-BS2 |
| | | 400 W | R88M-G40030L-B | R88M-G40030L-BS2 |
| | 200 V | 50 W | R88M-G05030H-B | R88M-G05030H-BS2 |
| | | 100 W | R88M-G10030H-B | R88M-G10030H-BS2 |
| | | 200 W | R88M-G20030H-B | R88M-G20030H-BS2 |
| | | 400 W | R88M-G40030H-B | R88M-G40030H-BS2 |
| | | 750 W | R88M-G75030H-B | R88M-G75030H-BS2 |

**Note:** Models with oil seals are also available.

### ABS/INC 3,000-r/min Cylindrical Servomotors

| Specifications | | | Model | |
|---|---|---|---|---|
| | | | Straight shaft | Straight shaft with key and tap |
| Without brake | 100 V | 50 W | R88M-G05030T | R88M-G05030T-S2 |
| | | 100 W | R88M-G10030S | R88M-G10030S-S2 |
| | | 200 W | R88M-G20030S | R88M-G20030S-S2 |
| | | 400 W | R88M-G40030S | R88M-G40030S-S2 |
| | 200 V | 50 W | R88M-G05030T | R88M-G05030T-S2 |
| | | 100 W | R88M-G10030T | R88M-G10030T-S2 |
| | | 200 W | R88M-G20030T | R88M-G20030T-S2 |
| | | 400 W | R88M-G40030T | R88M-G40030T-S2 |
| | | 750 W | R88M-G75030T | R88M-G75030T-S2 |
| | | 1 kW | R88M-G1K030T | R88M-G1K030T-S2 |
| | | 1.5 kW | R88M-G1K530T | R88M-G1K530T-S2 |
| | | 2 kW | R88M-G2K030T | R88M-G2K030T-S2 |
| | | 3 kW | R88M-G3K030T | R88M-G3K030T-S2 |
| | | 4 kW | R88M-G4K030T | R88M-G4K030T-S2 |
| | | 5 kW | R88M-G5K030T | R88M-G5K030T-S2 |
| With brake | 100 V | 50 W | R88M-G05030T-B | R88M-G05030T-BS2 |
| | | 100 W | R88M-G10030S-B | R88M-G10030S-BS2 |
| | | 200 W | R88M-G20030S-B | R88M-G20030S-BS2 |
| | | 400 W | R88M-G40030S-B | R88M-G40030S-BS2 |
| | 200 V | 50 W | R88M-G05030T-B | R88M-G05030T-BS2 |
| | | 100 W | R88M-G10030T-B | R88M-G10030T-BS2 |
| | | 200 W | R88M-G20030T-B | R88M-G20030T-BS2 |
| | | 400 W | R88M-G40030T-B | R88M-G40030T-BS2 |
| | | 750 W | R88M-G75030T-B | R88M-G75030T-BS2 |
| | | 1 kW | R88M-G1K030T-B | R88M-G1K030T-BS2 |
| | | 1.5 kW | R88M-G1K530T-B | R88M-G1K530T-BS2 |
| | | 2 kW | R88M-G2K030T-B | R88M-G2K030T-BS2 |
| | | 3 kW | R88M-G3K030T-B | R88M-G3K030T-BS2 |
| | | 4 kW | R88M-G4K030T-B | R88M-G4K030T-BS2 |
| | | 5 kW | R88M-G5K030T-B | R88M-G5K030T-BS2 |

**Note:** Models with oil seals are also available.

## INC 3,000-r/min Flat Servomotors

| Specifications | | | Model | |
|---|---|---|---|---|
| | | | Straight shaft | Straight shaft with key and tap |
| Without brake | 100 V | 100 W | R88M-GP10030L | R88M-GP10030L-S2 |
| | | 200 W | R88M-GP20030L | R88M-GP20030L-S2 |
| | | 400 W | R88M-GP40030L | R88M-GP40030L-S2 |
| | 200 V | 100 W | R88M-GP10030H | R88M-GP10030H-S2 |
| | | 200 W | R88M-GP20030H | R88M-GP20030H-S2 |
| | | 400 W | R88M-GP40030H | R88M-GP40030H-S2 |
| With brake | 100 V | 100 W | R88M-GP10030L-B | R88M-GP10030L-BS2 |
| | | 200 W | R88M-GP20030L-B | R88M-GP20030L-BS2 |
| | | 400 W | R88M-GP40030L-B | R88M-GP40030L-BS2 |
| | 200 V | 100 W | R88M-GP10030H-B | R88M-GP10030H-BS2 |
| | | 200 W | R88M-GP20030H-B | R88M-GP20030H-BS2 |
| | | 400 W | R88M-GP40030H-B | R88M-GP40030H-BS2 |

**Note:** Models with oil seals are also available.

## ABS/INC 3,000-r/min Flat Servomotors

| Specifications | | | Model | |
|---|---|---|---|---|
| | | | Straight shaft | Straight shaft with key and tap |
| Without brake | 100 V | 100 W | R88M-GP10030S | R88M-GP10030S-S2 |
| | | 200 W | R88M-GP20030S | R88M-GP20030S-S2 |
| | | 400 W | R88M-GP40030S | R88M-GP40030S-S2 |
| | 200 V | 100 W | R88M-GP10030T | R88M-GP10030T-S2 |
| | | 200 W | R88M-GP20030T | R88M-GP20030T-S2 |
| | | 400 W | R88M-GP40030T | R88M-GP40030T-S2 |
| With brake | 100 V | 100 W | R88M-GP10030S-B | R88M-GP10030S-BS2 |
| | | 200 W | R88M-GP20030S-B | R88M-GP20030S-BS2 |
| | | 400 W | R88M-GP40030S-B | R88M-GP40030S-BS2 |
| | 200 V | 100 W | R88M-GP10030T-B | R88M-GP10030T-BS2 |
| | | 200 W | R88M-GP20030T-B | R88M-GP20030T-BS2 |
| | | 400 W | R88M-GP40030T-B | R88M-GP40030T-BS2 |

**Note:** Models with oil seals are also available.

## ABS/INC 2,000-r/min Cylindrical Servomotors

| Specifications | | | Model | |
|---|---|---|---|---|
| | | | Straight shaft | Straight shaft with key and tap |
| Without brake | 200 V | 1 kW | R88M-G1K020T | R88M-G1K020T-S2 |
| | | 1.5 kW | R88M-G1K520T | R88M-G1K520T-S2 |
| | | 2 kW | R88M-G2K020T | R88M-G2K020T-S2 |
| | | 3 kW | R88M-G3K020T | R88M-G3K020T-S2 |
| | | 4 kW | R88M-G4K020T | R88M-G4K020T-S2 |
| | | 5 kW | R88M-G5K020T | R88M-G5K020T-S2 |
| | | 7.5 kW | R88M-G7K515T | R88M-G7K515T-S2 |
| With brake | 200 V | 1 kW | R88M-G1K020T-B | R88M-G1K020T-BS2 |
| | | 1.5 kW | R88M-G1K520T-B | R88M-G1K520T-BS2 |
| | | 2 kW | R88M-G2K020T-B | R88M-G2K020T-BS2 |
| | | 3 kW | R88M-G3K020T-B | R88M-G3K020T-BS2 |
| | | 4 kW | R88M-G4K020T-B | R88M-G4K020T-BS2 |
| | | 5 kW | R88M-G5K020T-B | R88M-G5K020T-BS2 |
| | | 7.5 kW | R88M-G7K515T-B | R88M-G7K515T-BS2 |

**Note: 1.** Models with oil seals are also available.
**Note: 2.** The rated rotation speed for 7.5-kW Servomotors is 1,500 r/min.

## ABS/INC 1,000-r/min Cylindrical Servomotors

| Specifications | | | Model | |
|---|---|---|---|---|
| | | | Straight shaft | Straight shaft with key and tap |
| Without brake | 200 V | 900 W | **R88M-G90010T** | **R88M-G90010T-S2** |
| | | 2 kW | **R88M-G2K010T** | **R88M-G2K010T-S2** |
| | | 3 kW | **R88M-G3K010T** | **R88M-G3K010T-S2** |
| | | 4.5 kW | **R88M-G4K510T** | **R88M-G4K510T-S2** |
| | | 6 kW | **R88M-G6K010T** | **R88M-G6K010T-S2** |
| With brake | 200 V | 900 W | **R88M-G90010T-B** | **R88M-G90010T-BS2** |
| | | 2 kW | **R88M-G2K010T-B** | **R88M-G2K010T-BS2** |
| | | 3 kW | **R88M-G3K010T-B** | **R88M-G3K010T-BS2** |
| | | 4.5 kW | **R88M-G4K510T-B** | **R88M-G4K510T-BS2** |
| | | 6 kW | **R88M-G6K010T-B** | **R88M-G6K010T-BS2** |

**Note:** Models with oil seals are also available.

## ● Decelerators

**Backlash: 3 Arcminutes Max.**

**Decelerators for 3,000-r/min Cylindrical Servomotors**

**Straight shaft**

| Specifications | | Model |
|---|---|---|
| Motor capacity | Gear ratio | |
| 50 W | 1/5 | R88G-HPG11A05100B |
| | 1/9 | R88G-HPG11A09050B |
| | 1/21 | R88G-HPG14A21100B |
| | 1/33 | R88G-HPG14A33050B |
| | 1/45 | R88G-HPG14A45050B |
| 100 W | 1/5 | R88G-HPG11A05100B |
| | 1/11 | R88G-HPG14A11100B |
| | 1/21 | R88G-HPG14A21100B |
| | 1/33 | R88G-HPG20A33100B |
| | 1/45 | R88G-HPG20A45100B |
| 200 W | 1/5 | R88G-HPG14A05200B |
| | 1/11 | R88G-HPG14A11200B |
| | 1/21 | R88G-HPG20A21200B |
| | 1/33 | R88G-HPG20A33200B |
| | 1/45 | R88G-HPG20A45200B |
| 400 W | 1/5 | R88G-HPG14A05400B |
| | 1/11 | R88G-HPG20A11400B |
| | 1/21 | R88G-HPG20A21400B |
| | 1/33 | R88G-HPG32A33400B |
| | 1/45 | R88G-HPG32A45400B |
| 750 W | 1/5 | R88G-HPG20A05750B |
| | 1/11 | R88G-HPG20A11750B |
| | 1/21 | R88G-HPG32A21750B |
| | 1/33 | R88G-HPG32A33750B |
| | 1/45 | R88G-HPG32A45750B |
| 1 kW | 1/5 | R88G-HPG32A051K0B |
| | 1/11 | R88G-HPG32A111K0B |
| | 1/21 | R88G-HPG32A211K0B |
| | 1/33 | R88G-HPG32A331K0B |
| | 1/45 | R88G-HPG50A451K0B |
| 1.5 kW | 1/5 | R88G-HPG32A052K0B |
| | 1/11 | R88G-HPG32A112K0B |
| | 1/21 | R88G-HPG32A211K5B |
| | 1/33 | R88G-HPG50A332K0B |
| | 1/45 | R88G-HPG50A451K5B |
| 2 kW | 1/5 | R88G-HPG32A052K0B |
| | 1/11 | R88G-HPG32A112K0B |
| | 1/21 | R88G-HPG50A212K0B |
| | 1/33 | R88G-HPG50A332K0B |
| 3 kW | 1/5 | R88G-HPG32A053K0B |
| | 1/11 | R88G-HPG50A113K0B |
| | 1/21 | R88G-HPG50A213K0B |
| 4 kW | 1/5 | R88G-HPG32A054K0B |
| | 1/11 | R88G-HPG50A115K0B |
| 5 kW | 1/5 | R88G-HPG50A055K0B |
| | 1/11 | R88G-HPG50A115K0B |

**Note: 1.** The standard models have a straight shaft.
**Note: 2.** To order a Servomotor with a straight shaft with key, add "J" to the end of the model number.

**Backlash: 3 Arcminutes Max.**

**Decelerators for 3,000-r/min Flat Servomotors**

**Straight shaft**

| Specifications | | Model |
|---|---|---|
| Motor capacity | Gear ratio | |
| 100 W | 1/5 | R88G-HPG11A05100PB |
| | 1/11 | R88G-HPG14A11100PB |
| | 1/21 | R88G-HPG14A21100PB |
| | 1/33 | R88G-HPG20A33100PB |
| | 1/45 | R88G-HPG20A45100PB |
| 200 W | 1/5 | R88G-HPG14A05200PB |
| | 1/11 | R88G-HPG20A11200PB |
| | 1/21 | R88G-HPG20A21200PB |
| | 1/33 | R88G-HPG20A33200PB |
| | 1/45 | R88G-HPG20A45200PB |
| 400 W | 1/5 | R88G-HPG20A05400PB |
| | 1/11 | R88G-HPG20A11400PB |
| | 1/21 | R88G-HPG20A21400PB |
| | 1/33 | R88G-HPG32A33400PB |
| | 1/45 | R88G-HPG32A45400PB |

**Note: 1.** The standard models have a straight shaft.
**Note: 2.** To order a Servomotor with a straight shaft with key, add "J" to the end of the model number.

### Backlash: 3 Arcminutes Max.
### Decelerators for 2,000-r/min Cylindrical Servomotors
### Straight shaft

| Specifications | | Model |
|---|---|---|
| Motor capacity | Gear ratio | |
| 1 kW | 1/5 | R88G-HPG32A053K0B |
| | 1/11 | R88G-HPG32A112K0SB |
| | 1/21 | R88G-HPG32A211K0SB |
| | 1/33 | R88G-HPG50A332K0SB |
| | 1/45 | R88G-HPG50A451K0SB |
| 1.5 kW | 1/5 | R88G-HPG32A053K0B |
| | 1/11 | R88G-HPG32A112K0SB |
| | 1/21 | R88G-HPG50A213K0B |
| | 1/33 | R88G-HPG50A332K0SB |
| 2 kW | 1/5 | R88G-HPG32A053K0B |
| | 1/11 | R88G-HPG32A112K0SB |
| | 1/21 | R88G-HPG50A213K0B |
| | 1/33 | R88G-HPG50A332K0SB |
| 3 kW | 1/5 | R88G-HPG32A054K0B |
| | 1/11 | R88G-HPG50A115K0B |
| | 1/21 | R88G-HPG50A213K0SB |
| | 1/25 | R88G-HPG65A253K0SB |
| 4 kW | 1/5 | R88G-HPG50A054K0SB |
| | 1/11 | R88G-HPG50A114K0SB |
| | 1/20 | R88G-HPG65A204K0SB |
| | 1/25 | R88G-HPG65A254K0SB |
| 5 kW | 1/5 | R88G-HPG50A055K0SB |
| | 1/11 | R88G-HPG50A115K0SB |
| | 1/20 | R88G-HPG65A205K0SB |
| | 1/25 | R88G-HPG65A255K0SB |
| 7.5 kW | 1/5 | R88G-HPG65A057K5SB |
| | 1/12 | R88G-HPG65A127K5SB |

**Note: 1.** The standard models have a straight shaft.
**Note: 2.** To order a Servomotor with a straight shaft with key, add “J” to the end of the model number.

### Backlash: 3 Arcminutes Max.
### Decelerators for 1,000-r/min Cylindrical Servomotors
### Straight shaft

| Specifications | | Model |
|---|---|---|
| Motor capacity | Gear ratio | |
| 900 W | 1/5 | R88G-HPG32A05900TB |
| | 1/11 | R88G-HPG32A11900TB |
| | 1/21 | R88G-HPG50A21900TB |
| | 1/33 | R88G-HPG50A33900TB |
| 2 kW | 1/5 | R88G-HPG32A052K0TB |
| | 1/11 | R88G-HPG50A112K0TB |
| | 1/21 | R88G-HPG50A212K0TB |
| | 1/25 | R88G-HPG65A255K0SB |
| 3 kW | 1/5 | R88G-HPG50A055K0SB |
| | 1/11 | R88G-HPG50A115K0SB |
| | 1/20 | R88G-HPG65A205K0SB |
| | 1/25 | R88G-HPG65A255K0SB |
| 4.5 kW | 1/5 | R88G-HPG50A054K5TB |
| | 1/12 | R88G-HPG65A127K5SB |
| | 1/20 | R88G-HPG65A204K5TB |
| 6 kW | 1/5 | R88G-HPG65A057K5SB |
| | 1/12 | R88G-HPG65A127K5SB |

**Note: 1.** The standard models have a straight shaft.
**Note: 2.** Models with a key and tap are indicated with "J" at the end of the model number.

### Backlash: 15 Arcminutes Max.
### Decelerators for 3,000-r/min Cylindrical Servomotors
### Straight shaft with key and tap

| Specifications | | Model |
|---|---|---|
| Motor capacity | Gear ratio | |
| 50 W | 1/5 | R88G-VRSF05B100CJ |
| | 1/9 | R88G-VRSF09B100CJ |
| | 1/15 | R88G-VRSF15B100CJ |
| | 1/25 | R88G-VRSF25B100CJ |
| 100 W | 1/5 | R88G-VRSF05B100CJ |
| | 1/9 | R88G-VRSF09B100CJ |
| | 1/15 | R88G-VRSF15B100CJ |
| | 1/25 | R88G-VRSF25B100CJ |
| 200 W | 1/5 | R88G-VRSF05B200CJ |
| | 1/9 | R88G-VRSF09C200CJ |
| | 1/15 | R88G-VRSF15C200CJ |
| | 1/25 | R88G-VRSF25C200CJ |
| 400 W | 1/5 | R88G-VRSF05C400CJ |
| | 1/9 | R88G-VRSF09C400CJ |
| | 1/15 | R88G-VRSF15C400CJ |
| | 1/25 | R88G-VRSF25C400CJ |
| 750 W | 1/5 | R88G-VRSF05C750CJ |
| | 1/9 | R88G-VRSF09D750CJ |
| | 1/15 | R88G-VRSF15D750CJ |
| | 1/25 | R88G-VRSF25D750CJ |

### Backlash: 15 Arcminutes Max.
### Decelerators for 3,000-r/min Flat Servomotors
### Straight shaft with key and tap

| Specifications | | Model |
|---|---|---|
| Motor capacity | Gear ratio | |
| 100 W | 1/5 | R88G-VRSF05B100PCJ |
| | 1/9 | R88G-VRSF09B100PCJ |
| | 1/15 | R88G-VRSF15B100PCJ |
| | 1/25 | R88G-VRSF25B100PCJ |
| 200 W | 1/5 | R88G-VRSF05B200PCJ |
| | 1/9 | R88G-VRSF09C200PCJ |
| | 1/15 | R88G-VRSF15C200PCJ |
| | 1/25 | R88G-VRSF25C200PCJ |
| 400 W | 1/5 | R88G-VRSF05C400PCJ |
| | 1/9 | R88G-VRSF09C400PCJ |
| | 1/15 | R88G-VRSF15C400PCJ |
| | 1/25 | R88G-VRSF25C400PCJ |

## Accessories and Cables

### • Servomotor Power Cables (Standard Cables)
**For Servomotor without brake**

| Specifications | | Model |
|---|---|---|
| 3,000-r/min Servomotors of 50 to 750 W, 3,000-r/min Flat Servomotors of 100 to 400 W | 3 m | R88A-CAGA003S |
| | 5 m | R88A-CAGA005S |
| | 10 m | R88A-CAGA010S |
| | 15 m | R88A-CAGA015S |
| | 20 m | R88A-CAGA020S |
| | 30 m | R88A-CAGA030S |
| | 40 m | R88A-CAGA040S |
| | 50 m | R88A-CAGA050S |
| 3,000-r/min Servomotors of 1 to 1.5 kW, 2,000-r/min Servomotors of 1 to 1.5 kW, 1,000-r/min Servomotors of 900 W | 3 m | R88A-CAGB003S |
| | 5 m | R88A-CAGB005S |
| | 10 m | R88A-CAGB010S |
| | 15 m | R88A-CAGB015S |
| | 20 m | R88A-CAGB020S |
| | 30 m | R88A-CAGB030S |
| | 40 m | R88A-CAGB040S |
| | 50 m | R88A-CAGB050S |
| 3,000-r/min Servomotors of 2 kW, 2,000-r/min Servomotors of 2 kW | 3 m | R88A-CAGC003S |
| | 5 m | R88A-CAGC005S |
| | 10 m | R88A-CAGC010S |
| | 15 m | R88A-CAGC015S |
| | 20 m | R88A-CAGC020S |
| | 30 m | R88A-CAGC030S |
| | 40 m | R88A-CAGC040S |
| | 50 m | R88A-CAGC050S |
| 3,000-r/min Servomotors of 3 to 5 kW, 2,000-r/min Servomotors of 3 to 5 kW, 1,000-r/min Servomotors of 2 to 4.5 kW | 3 m | R88A-CAGD003S |
| | 5 m | R88A-CAGD005S |
| | 10 m | R88A-CAGD010S |
| | 15 m | R88A-CAGD015S |
| | 20 m | R88A-CAGD020S |
| | 30 m | R88A-CAGD030S |
| | 40 m | R88A-CAGD040S |
| | 50 m | R88A-CAGD050S |
| 1,500-r/min Servomotors of 7.5 kW, 1,000-r/min Servomotors of 6 kW | 3 m | R88A-CAGE003S |
| | 5 m | R88A-CAGE005S |
| | 10 m | R88A-CAGE010S |
| | 15 m | R88A-CAGE015S |
| | 20 m | R88A-CAGE020S |
| | 30 m | R88A-CAGE030S |
| | 40 m | R88A-CAGE040S |
| | 50 m | R88A-CAGE050S |

**Note:** There are separate connectors for power and brakes for 3,000-r/min Servomotors of 50 to 750 W, Flat Servomotors, and Servomotors of 6 kW or higher. When a Servomotor with a brake is used, it is necessary to use both a Power Cable for Servomotors without brakes and a Power Cable.

### • Servomotor Power Cables (Standard Cables)
**For Servomotor with brake**

| Specifications | | Model |
|---|---|---|
| 3,000-r/min Servomotors of 1 to 1.5 kW, 2,000-r/min Servomotors of 1 to 1.5 kW, 1,000-r/min Servomotors of 900 W | 3 m | R88A-CAGB003B |
| | 5 m | R88A-CAGB005B |
| | 10 m | R88A-CAGB010B |
| | 15 m | R88A-CAGB015B |
| | 20 m | R88A-CAGB020B |
| | 30 m | R88A-CAGB030B |
| | 40 m | R88A-CAGB040B |
| | 50 m | R88A-CAGB050B |
| 3,000-r/min Servomotors of 2 kW, 2,000-r/min Servomotors of 2 kW | 3 m | R88A-CAGC003B |
| | 5 m | R88A-CAGC005B |
| | 10 m | R88A-CAGC010B |
| | 15 m | R88A-CAGC015B |
| | 20 m | R88A-CAGC020B |
| | 30 m | R88A-CAGC030B |
| | 40 m | R88A-CAGC040B |
| | 50 m | R88A-CAGC050B |
| 3,000-r/min Servomotors of 3 to 5 kW, 2,000-r/min Servomotors of 3 to 5 kW, 1,000-r/min Servomotors of 2 to 4.5 kW | 3 m | R88A-CAGD003B |
| | 5 m | R88A-CAGD005B |
| | 10 m | R88A-CAGD010B |
| | 15 m | R88A-CAGD015B |
| | 20 m | R88A-CAGD020B |
| | 30 m | R88A-CAGD030B |
| | 40 m | R88A-CAGD040B |
| | 50 m | R88A-CAGD050B |

### • Brake Cables (Standard Cables)

| Specifications | | Model |
|---|---|---|
| 3,000-r/min Servomotors of 50 to 750 W, 3,000-r/min Flat Servomotors of 100 to 400 W | 3 m | R88A-CAGA003B |
| | 5 m | R88A-CAGA005B |
| | 10 m | R88A-CAGA010B |
| | 15 m | R88A-CAGA015B |
| | 20 m | R88A-CAGA020B |
| | 30 m | R88A-CAGA030B |
| | 40 m | R88A-CAGA040B |
| | 50 m | R88A-CAGA050B |
| 1,500-r/min Servomotors of 7.5 kW, 1,000-r/min Servomotors of 6 kW | 3 m | R88A-CAGE003B |
| | 5 m | R88A-CAGE005B |
| | 10 m | R88A-CAGE010B |
| | 15 m | R88A-CAGE015B |
| | 20 m | R88A-CAGE020B |
| | 30 m | R88A-CAGE030B |
| | 40 m | R88A-CAGE040B |
| | 50 m | R88A-CAGE050B |

### • Encoder Cables (Standard Cables)

| Specifications | | Model |
|---|---|---|
| 3,000-r/min Servomotors of 50 to 750 W with an absolute encoder, 3,000-r/min Flat Servomotors of 100 to 400 W with an absolute encoder | 3 m | **R88A-CRGA003C** |
| | 5 m | **R88A-CRGA005C** |
| | 10 m | **R88A-CRGA010C** |
| | 15 m | **R88A-CRGA015C** |
| | 20 m | **R88A-CRGA020C** |
| | 30 m | **R88A-CRGA030C** |
| | 40 m | **R88A-CRGA040C** |
| | 50 m | **R88A-CRGA050C** |
| 3,000-r/min Servomotors of 50 to 750 W with an incremental encoder, 3,000-r/min Flat Servomotors of 100 to 400 W with an incremental encoder | 3 m | **R88A-CRGB003C** |
| | 5 m | **R88A-CRGB005C** |
| | 10 m | **R88A-CRGB010C** |
| | 15 m | **R88A-CRGB015C** |
| | 20 m | **R88A-CRGB020C** |
| | 30 m | **R88A-CRGB030C** |
| | 40 m | **R88A-CRGB040C** |
| | 50 m | **R88A-CRGB050C** |
| 3,000-r/min Servomotors of 1 to 5 kW, 2,000-r/min Servomotors of 1 to 5 kW, 1,500-r/min Servomotors of 7.5 kW, 1,000-r/min Servomotors of 900 W to 6 kW | 3 m | **R88A-CRGC003N** |
| | 5 m | **R88A-CRGC005N** |
| | 10 m | **R88A-CRGC010N** |
| | 15 m | **R88A-CRGC015N** |
| | 20 m | **R88A-CRGC020N** |
| | 30 m | **R88A-CRGC030N** |
| | 40 m | **R88A-CRGC040N** |
| | 50 m | **R88A-CRGC050N** |

### • Absolute Encoder Battery Cable

| Specifications | | Model |
|---|---|---|
| Absolute Encoder Battery Cable (Battery not included.) | 0.3 m | **R88A-CRGD0R3C** |
| Absolute Encoder Battery Cable (One R88A-BAT01G Battery included.) | 0.3 m | **R88A-CRGD0R3C-BS** |

### • Absolute Encoder Backup Battery

| Specifications | Model |
|---|---|
| 2,000 mA·h 3.6 V | **R88A-BAT01G** |

### • Servomotor Power Cables (Robot Cables)

**For Servomotor without brake**

| Specifications | | Model |
|---|---|---|
| 3,000-r/min Servomotors of 50 to 750 W, 3,000-r/min Flat Servomotors of 100 to 400 W | 3 m | **R88A-CAGA003SR** |
| | 5 m | **R88A-CAGA005SR** |
| | 10 m | **R88A-CAGA010SR** |
| | 15 m | **R88A-CAGA015SR** |
| | 20 m | **R88A-CAGA020SR** |
| | 30 m | **R88A-CAGA030SR** |
| | 40 m | **R88A-CAGA040SR** |
| | 50 m | **R88A-CAGA050SR** |
| 3,000-r/min Servomotors of 1 to 1.5 kW, 2,000-r/min Servomotors of 1 to 1.5 kW, 1,000-r/min Servomotors of 900 W | 3 m | **R88A-CAGB003SR** |
| | 5 m | **R88A-CAGB005SR** |
| | 10 m | **R88A-CAGB010SR** |
| | 15 m | **R88A-CAGB015SR** |
| | 20 m | **R88A-CAGB020SR** |
| | 30 m | **R88A-CAGB030SR** |
| | 40 m | **R88A-CAGB040SR** |
| | 50 m | **R88A-CAGB050SR** |
| 3,000-r/min Servomotors of 2 kW, 2,000-r/min Servomotors of 2 kW | 3 m | **R88A-CAGC003SR** |
| | 5 m | **R88A-CAGC005SR** |
| | 10 m | **R88A-CAGC010SR** |
| | 15 m | **R88A-CAGC015SR** |
| | 20 m | **R88A-CAGC020SR** |
| | 30 m | **R88A-CAGC030SR** |
| | 40 m | **R88A-CAGC040SR** |
| | 50 m | **R88A-CAGC050SR** |
| 3,000-r/min Servomotors of 3 to 5 kW, 2,000-r/min Servomotors of 3 to 5 kW, 1,000-r/min Servomotors of 2 to 4.5 kW | 3 m | **R88A-CAGD003SR** |
| | 5 m | **R88A-CAGD005SR** |
| | 10 m | **R88A-CAGD010SR** |
| | 15 m | **R88A-CAGD015SR** |
| | 20 m | **R88A-CAGD020SR** |
| | 30 m | **R88A-CAGD030SR** |
| | 40 m | **R88A-CAGD040SR** |
| | 50 m | **R88A-CAGD050SR** |

### • Servomotor Power Cables (Robot Cables)

**For Servomotor with brake**

| Specifications | | Model |
|---|---|---|
| 3,000-r/min Servomotors of 1 to 1.5 kW,<br>2,000-r/min Servomotors of 1 to 1.5 kW,<br>1,000-r/min Servomotors of 900 W | 3 m | **R88A-CAGB003BR** |
| | 5 m | **R88A-CAGB005BR** |
| | 10 m | **R88A-CAGB010BR** |
| | 15 m | **R88A-CAGB015BR** |
| | 20 m | **R88A-CAGB020BR** |
| | 30 m | **R88A-CAGB030BR** |
| | 40 m | **R88A-CAGB040BR** |
| | 50 m | **R88A-CAGB050BR** |
| 3,000-r/min Servomotors of 2 kW,<br>2,000-r/min Servomotors of 2 kW | 3 m | **R88A-CAGC003BR** |
| | 5 m | **R88A-CAGC005BR** |
| | 10 m | **R88A-CAGC010BR** |
| | 15 m | **R88A-CAGC015BR** |
| | 20 m | **R88A-CAGC020BR** |
| | 30 m | **R88A-CAGC030BR** |
| | 40 m | **R88A-CAGC040BR** |
| | 50 m | **R88A-CAGC050BR** |
| 3,000-r/min Servomotors of 3 to 5 kW,<br>2,000-r/min Servomotors of 3 to 5 kW,<br>1,000-r/min Servomotors of 2 to 4.5 kW | 3 m | **R88A-CAGD003BR** |
| | 5 m | **R88A-CAGD005BR** |
| | 10 m | **R88A-CAGD010BR** |
| | 15 m | **R88A-CAGD015BR** |
| | 20 m | **R88A-CAGD020BR** |
| | 30 m | **R88A-CAGD030BR** |
| | 40 m | **R88A-CAGD040BR** |
| | 50 m | **R88A-CAGD050BR** |

### • Brake Cables (Robot Cables)

| Specifications | | Model |
|---|---|---|
| 3,000-r/min Servomotors of 50 to 750 W,<br>3,000-r/min Flat Servomotors of 100 to 400 W | 3 m | **R88A-CAGA003BR** |
| | 5 m | **R88A-CAGA005BR** |
| | 10 m | **R88A-CAGA010BR** |
| | 15 m | **R88A-CAGA015BR** |
| | 20 m | **R88A-CAGA020BR** |
| | 30 m | **R88A-CAGA030BR** |
| | 40 m | **R88A-CAGA040BR** |
| | 50 m | **R88A-CAGA050BR** |

### • Encoder Cables (Robot Cables)

| Specifications | | Model |
|---|---|---|
| 3,000-r/min Servomotors of 50 to 750 W<br>with an absolute encoder,<br>3,000-r/min Flat Servomotors of 100 to 400 W<br>with an absolute encoder | 3 m | **R88A-CRGA003CR** |
| | 5 m | **R88A-CRGA005CR** |
| | 10 m | **R88A-CRGA010CR** |
| | 15 m | **R88A-CRGA015CR** |
| | 20 m | **R88A-CRGA020CR** |
| | 30 m | **R88A-CRGA030CR** |
| | 40 m | **R88A-CRGA040CR** |
| | 50 m | **R88A-CRGA050CR** |
| 3,000-r/min Servomotors of 50 to 750 W<br>with an incremental encoder,<br>3,000-r/min Flat Servomotors of 100 to 400 W<br>with an incremental encoder | 3 m | **R88A-CRGB003CR** |
| | 5 m | **R88A-CRGB005CR** |
| | 10 m | **R88A-CRGB010CR** |
| | 15 m | **R88A-CRGB015CR** |
| | 20 m | **R88A-CRGB020CR** |
| | 30 m | **R88A-CRGB030CR** |
| | 40 m | **R88A-CRGB040CR** |
| | 50 m | **R88A-CRGB050CR** |
| 3,000-r/min Servomotors of 1 to 5 kW,<br>2,000-r/min Servomotors of 1 to 5 kW,<br>1,500-r/min Servomotors of 7.5 kW,<br>1,000-r/min Servomotors of 900 W to 6 kW | 3 m | **R88A-CRGC003NR** |
| | 5 m | **R88A-CRGC005NR** |
| | 10 m | **R88A-CRGC010NR** |
| | 15 m | **R88A-CRGC015NR** |
| | 20 m | **R88A-CRGC020NR** |
| | 30 m | **R88A-CRGC030NR** |
| | 40 m | **R88A-CRGC040NR** |
| | 50 m | **R88A-CRGC050NR** |

### • Communications Cables

| Specifications | | Model |
|---|---|---|
| RS-232 Communications Cable<br>(Personal Computer Monitor Cable) | 2 m | **R88A-CCG002P2** |

### • Connectors

| Specifications | | Model |
|---|---|---|
| Servomotor Connector for Encoder Cable | Absolute Encoder | **R88A-CNG01R** |
| | Incremental Encoder | **R88A-CNG02R** |
| Control I/O Connector (CN1) | | **R88A-CNU01C** |
| Encoder Connector (CN2) | | **R88A-CNW01R** |
| Power Cable Connector (750 W max.) | | **R88A-CNG01A** |
| Brake Cable Connector (750 W max.) | | **R88A-CNG01B** |

### • Control Cables

| Specifications | | Model |
|---|---|---|
| Connector Terminal Block Cables | 1 m | **XW2Z-100J-B33** |
| | 2 m | **XW2Z-200J-B33** |
| Connector Terminal Block | M3 screw type | **XW2B-20G4** |
| | M3.5 screw type | **XW2B-20G5** |
| | M3 screw type | **XW2D-20G6** |

### • External Regeneration Resistors

| Specifications | Model |
|---|---|
| 20 W, 50 Ω | **R88A-RR08050S** |
| 20 W, 100 Ω | **R88A-RR080100S** |
| 70 W, 47 Ω | **R88A-RR22047S1** |
| 500 W, 20 Ω | **R88A-RR50020S** |

### • Reactors

| Specifications | Model |
|---|---|
| R88D-GNA5L-ML2/-GN01H-ML2 | **3G3AX-DL2002** |
| R88D-GN01L-ML2/-GN02H-ML2 | **3G3AX-DL2004** |
| R88D-GN02L-ML2/-GN04H-ML2 | **3G3AX-DL2007** |
| R88D-GN04L-ML2/-GN08H-ML2/-GT10H-ML2 | **3G3AX-DL2015** |
| R88D-GN15H-ML2 | **3G3AX-DL2022** |
| R88D-GN08H-ML2/-GN10H-ML2/-GN15H-ML2 | **3G3AX-AL2025** |
| R88D-GN20H-ML2/-GN30H-ML2 | **3G3AX-AL2055** |
| R88D-GN50H-ML2 | **3G3AX-AL2110** |
| R88D-GN75H-ML2 | **3G3AX-AL2220** |

### • Mounting Brackets (L Brackets for Rack Mounting)

| Specifications | Model |
|---|---|
| R88D-GNA5L-ML2/-GN01L-ML2/-GN01H-ML2/ -GN02H-ML2 | **R88A-TK01G** |
| R88D-GN02L-ML2/-GN04H-ML2 | **R88A-TK02G** |
| R88D-GN04L-ML2/-GN08H-ML2 | **R88A-TK03G** |
| R88D-GN10H-ML2/-GN15H-ML2 | **R88A-TK04G** |

### • Parameter Unit

| Specifications | Model |
|---|---|
| Parameter Unit | **R88A-PR02G** |

### • MECHATROLINK-related Devices and Cables (Manufactured by Yaskawa Corporation)

| Name | | OMRON model number | Yaskawa model number |
|---|---|---|---|
| MECHATROLINK-II Cables (without ring core and USB connector on both ends) Can be connected to R88D-GN and R88D-KN only. | 0.5 m | **FNY-W6002-A5** | **JEPMC-W6002-A5-E** |
| | 1.0 m | **FNY-W6002-01** | **JEPMC-W6002-01-E** |
| | 3.0 m | **FNY-W6002-03** | **JEPMC-W6002-03-E** |
| | 5.0 m | **FNY-W6002-05** | **JEPMC-W6002-05-E** |
| MECHATROLINK-II Cables (with ring core and USB connector on both ends) | 0.5 m | **FNY-W6003-A5** | **JEPMC-W6003-A5** |
| | 1.0 m | **FNY-W6003-01** | **JEPMC-W6003-01** |
| | 3.0 m | **FNY-W6003-03** | **JEPMC-W6003-03** |
| | 5.0 m | **FNY-W6003-05** | **JEPMC-W6003-05** |
| | 10.0 m | **FNY-W6003-10** | **JEPMC-W6003-10** |
| | 20.0 m | **FNY-W6003-20** | **JEPMC-W6003-20** |
| | 30.0 m | **FNY-W6003-30** | **JEPMC-W6003-30** |
| MECHATROLINK-II Terminating Resistor | Terminating resistance | **FNY-W6022** | **JEPMC-W6022** |
| MECHATROLINK-II Repeater | Communications Repeater | **FNY-REP2000** | **JEPMC-REP2000** |

**Note:** MECHATROLINK-related Devices and Cables are manufactured by Yaskawa Corporation, but they can be ordered directly from OMRON using the OMRON model numbers. (Yaskawa-brand products will be delivered even when they are ordered from OMRON.)

## Servo Drive-Servomotor Combinations

Only the Servomotor and Servo Drive combinations listed here can be used. Do not use other combinations.

### ● 3,000-r/min Sylindrical Servomotors and Servo Drives

| Voltage | Servo Drive | Servomotor | | |
|---|---|---|---|---|
| | | Rated output | With incremental encoder | With absolute encoder |
| 100 V | R88D-GNA5L-ML2 | 50 W | R88M-G05030H-□ | R88M-G05030T-□ |
| | R88D-GN01L-ML2 | 100 W | R88M-G10030L-□ | R88M-G10030S-□ |
| | R88D-GN02L-ML2 | 200 W | R88M-G20030L-□ | R88M-G20030S-□ |
| | R88D-GN04L-ML2 | 400 W | R88M-G40030L-□ | R88M-G40030S-□ |
| Single-phase 200 V | R88D-GN01H-ML2 | 50 W | R88M-G05030H-□ | R88M-G05030T-□ |
| | R88D-GN01H-ML2 | 100 W | R88M-G10030H-□ | R88M-G10030T-□ |
| | R88D-GN02H-ML2 | 200 W | R88M-G20030H-□ | R88M-G20030T-□ |
| | R88D-GN04H-ML2 | 400 W | R88M-G40030H-□ | R88M-G40030T-□ |
| Single-phase/ three-phase 200 V | R88D-GN08H-ML2 | 750 W | R88M-G75030H-□ | R88M-G75030T-□ |
| | R88D-GN15H-ML2 | 1 kW | – | R88M-G1K030T-□ |
| | R88D-GN15H-ML2 | 1.5 kW | – | R88M-G1K530T-□ |
| Three-phase 200 V | R88D-GN20H-ML2 | 2 kW | – | R88M-G2K030T-□ |
| | R88D-GN30H-ML2 | 3 kW | – | R88M-G3K030T-□ |
| | R88D-GN50H-ML2 | 4 kW | – | R88M-G4K030T-□ |
| | R88D-GN50H-ML2 | 5 kW | – | R88M-G5K030T-□ |

### ● 3,000-r/min Flat Servomotors and Servo Drives

| Voltage | Servo Drive | Servomotor | | |
|---|---|---|---|---|
| | | Rated output | With incremental encoder | With absolute encoder |
| 100 V | R88D-GN01L-ML2 | 100 W | R88M-GP10030L-□ | R88M-GP10030S-□ |
| | R88D-GN02L-ML2 | 200 W | R88M-GP20030L-□ | R88M-GP20030S-□ |
| | R88D-GN04L-ML2 | 400 W | R88M-GP40030L-□ | R88M-GP40030S-□ |
| Single-phase 200 V | R88D-GN01H-ML2 | 100 W | R88M-GP10030H-□ | R88M-GP10030T-□ |
| | R88D-GN02H-ML2 | 200 W | R88M-GP20030H-□ | R88M-GP20030T-□ |
| | R88D-GN04H-ML2 | 400 W | R88M-GP40030H-□ | R88M-GP40030T-□ |

### ● 2,000-r/min Sylindrical Servomotors and Servo Drives

| Voltage | Servo Drive | Servomotor | |
|---|---|---|---|
| | | Rated output | With absolute encoder |
| Single-phase/ three-phase 200 V | R88D-GN10H-ML2 | 1 kW | R88M-G1K020T-□ |
| | R88D-GN15H-ML2 | 1.5 kW | R88M-G1K520T-□ |
| Three-phase 200 V | R88D-GN20H-ML2 | 2 kW | R88M-G2K020T-□ |
| | R88D-GN30H-ML2 | 3 kW | R88M-G3K020T-□ |
| | R88D-GN50H-ML2 | 4 kW | R88M-G4K020T-□ |
| | R88D-GN50H-ML2 | 5 kW | R88M-G5K020T-□ |
| | R88D-GN75H-ML2 | 7.5 kW | R88M-G7K515T-□ |

### ● 1,000-r/min Sylindrical Servomotors and Servo Drives

| Voltage | Servo Drive | Servomotor | |
|---|---|---|---|
| | | Rated output | With absolute encoder |
| Single-phase/ three-phase 200 V | R88D-GN15H-ML2 | 900 W | R88M-G90010T-□ |
| Three-phase 200 V | R88D-GN30H-ML2 | 2 kW | R88M-G2K010T-□ |
| | R88D-GN50H-ML2 | 3 kW | R88M-G3K010T-□ |
| | R88D-GN50H-ML2 | 4.5 kW | R88M-G4K510T-□ |
| | R88D-GN75H-ML2 | 6 kW | R88M-G6K010T-□ |

# Servomotor and Decelerator Combinations

## ● 3,000-r/min Cylindrical Servomotors

| Motor model | 1/5 | 1/11 (1/9 for flange size No.11) | 1/21 | 1/33 | 1/45 |
|---|---|---|---|---|---|
| R88M-G05030□ | R88G-HPG11A05100B□ (Also used with R88M-G10030□) | R88G-HPG11A09050B□ (Gear ratio 1/9) | R88G-HPG14A21100B□ (Also used with R88M-G10030□) | R88G-HPG14A33050B□ | R88G-HPG14A45050B□ |
| R88M-G10030□ | R88G-HPG11A05100B□ | R88G-HPG14A11100B□ | R88G-HPG14A21100B□ | R88G-HPG20A33100B□ | R88G-HPG20A45100B□ |
| R88M-G20030□ | R88G-HPG14A05200B□ | R88G-HPG14A11200B□ | R88G-HPG20A21200B□ | R88G-HPG20A33200B□ | R88G-HPG20A45200B□ |
| R88M-G40030□ | R88G-HPG14A05400B□ | R88G-HPG20A11400B□ | R88G-HPG20A21400B□ | R88G-HPG32A33400B□ | R88G-HPG32A45400B□ |
| R88M-G75030□ | R88G-HPG20A05750B□ | R88G-HPG20A11750B□ | R88G-HPG32A21750B□ | R88G-HPG32A33750B□ | R88G-HPG32A45750B□ |
| R88M-G1K030T | R88G-HPG32A051K0B□ | R88G-HPG32A111K0B□ | R88G-HPG32A211K0B□ | R88G-HPG32A331K0B□ | R88G-HPG50A451K0B□ |
| R88M-G1K530T | R88G-HPG32A052K0B□ (Also used with R88M-G2K030T) | R88G-HPG32A112K0B□ (Also used with R88M-G2K030T) | R88G-HPG32A211K5B□ | R88G-HPG50A332K0B□ (Also used with R88M-G2K030T) | R88G-HPG50A451K5B□ |
| R88M-G2K030T | R88G-HPG32A052K0B□ | R88G-HPG32A112K0B□ | R88G-HPG50A212K0B□ | R88G-HPG50A332K0B□ | – |
| R88M-G3K030T | R88G-HPG32A053K0B□ | R88G-HPG50A113K0B□ | R88G-HPG50A213K0B□ | – | – |
| R88M-G4K030T | R88G-HPG32A054K0B□ | R88G-HPG50A115K0B□ (Also used with R88M-G5K030T) | – | – | – |
| R88M-G5K030T | R88G-HPG50A055K0B□ | R88G-HPG50A115K0B□ | – | – | – |

## ● 3,000-r/min Flat Servomotors

| Motor model | 1/5 | 1/11 | 1/21 | 1/33 | 1/45 |
|---|---|---|---|---|---|
| R88M-GP10030□ | R88G-HPG11A05100PB□ | R88G-HPG14A11100PB□ | R88G-HPG14A21100PB□ | R88G-HPG20A33100PB□ | R88G-HPG20A45100PB□ |
| R88M-GP20030□ | R88G-HPG14A05200PB□ | R88G-HPG20A11200PB□ | R88G-HPG20A21200PB□ | R88G-HPG20A33200PB□ | R88G-HPG20A45200PB□ |
| R88M-GP40030□ | R88G-HPG20A05400PB□ | R88G-HPG20A11400PB□ | R88G-HPG20A21400PB□ | R88G-HPG32A33400PB□ | R88G-HPG32A45400PB□ |

## ● 2,000-r/min Cylindrical Servomotors

| Motor model | 1/5 | 1/11 (1/12 for flange size No.65) | 1/21 (1/20 for flange size No.65) | 1/33 (1/25 for flange size No.65) | 1/45 |
|---|---|---|---|---|---|
| R88M-G1K020T | R88G-HPG32A053K0B□ (Also used with R88M-G3K030T) | R88G-HPG32A112K0SB□ (Also used with R88M-G2K020T) | R88G-HPG32A211K0SB□ | R88G-HPG50A332K0SB□ (Also used with R88M-G2K020T) | R88G-HPG50A451K0SB□ |
| R88M-G1K520T | R88G-HPG32A053K0B□ (Also used with R88M-G3K030T) | R88G-HPG32A112K0SB□ (Also used with R88M-G2K020T) | R88G-HPG50A213K0B□ (Also used with R88M-G3K030T) | R88G-HPG50A332K0SB□ (Also used with R88M-G2K020T) | – |
| R88M-G2K020T | R88G-HPG32A053K0B□ (Also used with R88M-G3K030T) | R88G-HPG32A112K0SB□ | R88G-HPG50A213K0B□ (Also used with R88M-G3K030T) | R88G-HPG50A332K0SB□ | – |
| R88M-G3K020T | R88G-HPG32A054K0B□ (Also used with R88M-G4K030T) | R88G-HPG50A115K0B□ (Also used with R88M-G5K030T) | R88G-HPG50A213K0SB□ | R88G-HPG65A253K0SB□ | – |
| R88M-G4K020T | R88G-HPG50A054K0SB□ | R88G-HPG50A114K0SB□ | R88G-HPG65A204K0SB□ | R88G-HPG65A254K0SB□ | – |
| R88M-G5K020T | R88G-HPG50A055K0SB□ | R88G-HPG50A115K0SB□ | R88G-HPG65A205K0SB□ | R88G-HPG65A255K0SB□ | – |
| R88M-G7K515T | R88G-HPG65A057K5SB□ | R88G-HPG65A127K5SB□ | – | – | – |

## ● 1,000-r/min Cylindrical Servomotors

| Motor model | 1/5 | 1/11 (1/12 for flange size No.65) | 1/21 (1/20 for flange size No.65) | 1/33 (1/25 for flange size No.65) |
|---|---|---|---|---|
| R88M-G90010T | R88G-HPG32A05900TB□ | R88G-HPG32A11900TB□ | R88G-HPG50A21900TB□ | R88G-HPG50A33900TB□ |
| R88M-G2K010T | R88G-HPG32A052K0TB□ | R88G-HPG50A112K0TB□ | R88G-HPG50A212K0TB□ | R88G-HPG65A255K0SB□ (Also used with R88M-G5K020T) |
| R88M-G3K010T | R88G-HPG50A055K0SB□ (Also used with R88M-G5K020T) | R88G-HPG50A115K0SB□ (Also used with R88M-G5K020T) | R88G-HPG65A205K0SB□ (Also used with R88M-G5K020T) | R88G-HPG65A255K0SB□ (Also used with R88M-G5K020T) |
| R88M-G4K510T | R88G-HPG50A054K5TB□ | R88G-HPG65A127K5SB□ (Also used with R88M-G7K515T) | R88G-HPG65A204K5TB□ | – |
| R88M-G6K010T | R88G-HPG65A057K5SB□ (Also used with R88M-G7K515T) | R88G-HPG65A127K5SB□ (Also used with R88M-G7K515T) | – | – |

## Cable Combinations

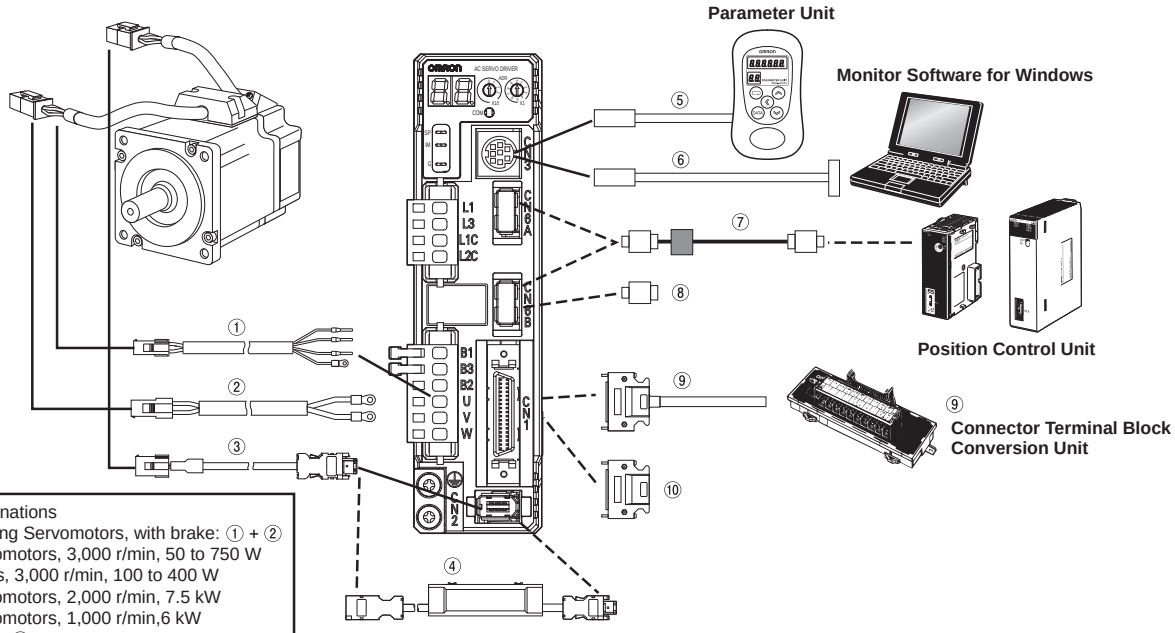


* Brake Cable Combinations
Using the following Servomotors, with brake: ① + ②
Cylindrical Servomotors, 3,000 r/min, 50 to 750 W
Flat Servomotors, 3,000 r/min, 100 to 400 W
Cylindrical Servomotors, 2,000 r/min, 7.5 kW
Cylindrical Servomotors, 1,000 r/min,6 kW
Other Servomotors: ①

### ● Power Supply Cables (for CNB) (SR Connection Cables)

| Symbol | Name | Connected to | Model | Description |
|---|---|---|---|---|
| ① | Standard Servomotor Power Cables for Servomotors without Brakes | Cylindrical Servomotors, 3,000 r/min, 50 to 750 W<br>Flat Servomotors, 3,000 r/min, 100 to 400 W | R88A-CAGA□□□S<br>The empty boxes in the model number are for the cable length. The cable can be 3, 5, 10, 15, 20, 30, 40, or 50 m long. | 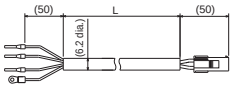 **[Servomotor Connector]**<br>Connector:<br>172159-1 (Tyco Electronics AMP KK)<br>Connector pins:<br>170362-1 (Tyco Electronics AMP KK)<br>170366-1 (Tyco Electronics AMP KK) |
| | | Cylindrical Servomotors, 3,000 r/min, 1 to 1.5 kW<br>Cylindrical Servomotors, 2,000 r/min, 1 to 1.5 kW<br>Cylindrical Servomotors, 1,000 r/min, 900 W | R88A-CAGB□□□S<br>The empty boxes in the model number are for the cable length. The cable can be 3, 5, 10, 15, 20, 30, 40, or 50 m long. | 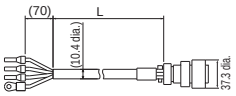 **[Servomotor Connector]**<br>Straight plug:<br>N/MS3106B20-4S<br>(Japan Aviation Electronics Industry, Ltd.)<br>Cable clamp:<br>N/MS3057-12A<br>(Japan Aviation Electronics Industry, Ltd.) |
| | | Cylindrical Servomotors, 3,000 r/min, 2 kW<br>Cylindrical Servomotors, 2,000 r/min, 2 kW | R88A-CAGC□□□S<br>The empty boxes in the model number are for the cable length. The cable can be 3, 5, 10, 15, 20, 30, 40, or 50 m long. | 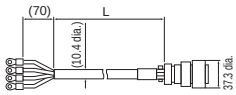 **[Servomotor Connector]**<br>Straight plug:<br>N/MS3106B20-4S<br>(Japan Aviation Electronics Industry, Ltd.)<br>Cable clamp:<br>N/MS3057-12A<br>(Japan Aviation Electronics Industry, Ltd.) |
| | | Cylindrical Servomotors, 3,000 r/min, 3 to 5 kW<br>Cylindrical Servomotors, 2,000 r/min, 3 to 5 kW<br>Cylindrical Servomotors, 1,000 r/min, 2 to 4.5 kW | R88A-CAGD□□□S<br>The empty boxes in the model number are for the cable length. The cable can be 3, 5, 10, 15, 20, 30, 40, or 50 m long. | 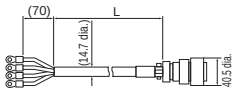 **[Servomotor Connector]**<br>Straight plug:<br>N/MS3106B22-22S<br>(Japan Aviation Electronics Industry, Ltd.)<br>Cable clamp:<br>N/MS3057-12A<br>(Japan Aviation Electronics Industry, Ltd.) |
| | | Cylindrical Servomotors, 1,500 r/min, 7.5 kW<br>Cylindrical Servomotors, 1,000 r/min, 6 kW | R88A-CAGE□□□S<br>The empty boxes in the model number are for the cable length. The cable can be 3, 5, 10, 15, 20, 30, 40, or 50 m long. | 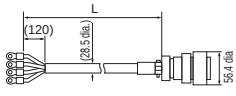 **[Servomotor Connector]**<br>Straight plug:<br>N/MS3106B32-17S<br>(Japan Aviation Electronics Industry, Ltd.)<br>Cable clamp:<br>N/MS3057-20A<br>(Japan Aviation Electronics Industry, Ltd.) |

| Symbol | Name | Connected to | Model | Description |
|---|---|---|---|---|
| ① | Standard Servomotor Power Cables for Servomotors with Brakes | Cylindrical Servomotors, 3,000 r/min, 1 to 1.5 kW<br>Cylindrical Servomotors, 2,000 r/min, 1 to 1.5 kW<br>Cylindrical Servomotors, 1,000 r/min, 900 W | R88A-CAGB□□□B<br>The empty boxes in the model number are for the cable length. The cable can be 3, 5, 10, 15, 20, 30, 40, or 50 m long. | 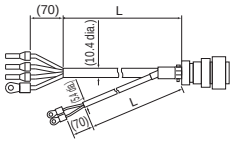 **[Servomotor Connector]**<br>Straight plug:<br>N/MS3106B20-18S<br>(Japan Aviation Electronics Industry, Ltd.)<br>Cable clamp:<br>N/MS3057-12A<br>(Japan Aviation Electronics Industry, Ltd.) |
| | | Cylindrical Servomotors, 3,000 r/min, 2 kW<br>Cylindrical Servomotors, 2,000 r/min, 2 kW | R88A-CAGC□□□B<br>The empty boxes in the model number are for the cable length. The cable can be 3, 5, 10, 15, 20, 30, 40, or 50 m long. | 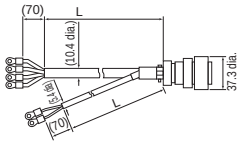 **[Servomotor Connector]**<br>Straight plug:<br>N/MS3106B20-18S<br>(Japan Aviation Electronics Industry, Ltd.)<br>Cable clamp:<br>N/MS3057-12A<br>(Japan Aviation Electronics Industry, Ltd.) |
| | | Cylindrical Servomotors, 3,000 r/min, 3 to 5 kW<br>Cylindrical Servomotors, 2,000 r/min, 3 to 5 kW<br>Cylindrical Servomotors, 1,000 r/min, 2 to 4.5 kW | R88A-CAGD□□□B<br>The empty boxes in the model number are for the cable length. The cable can be 3, 5, 10, 15, 20, 30, 40, or 50 m long. | 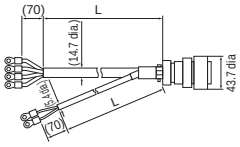 **[Servomotor Connector]**<br>Straight plug:<br>N/MS3106B24-11S<br>(Japan Aviation Electronics Industry, Ltd.)<br>Cable clamp:<br>N/MS3057-16A<br>(Japan Aviation Electronics Industry, Ltd.) |
| | Robot Servomotor Power Cables for Servomotors without Brakes | Cylindrical Servomotors, 3,000 r/min, 50 to 750 W<br>Flat Servomotors, 3,000 r/min, 100 to 400 W | R88A-CAGA□□□SR<br>The empty boxes in the model number are for the cable length. The cable can be 3, 5, 10, 15, 20, 30, 40, or 50 m long. | 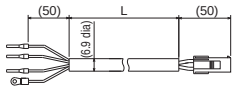 **[Servomotor Connector]**<br>Connector:<br>172159-1 (Tyco Electronics AMP KK)<br>Connector pins:<br>170362-1 (Tyco Electronics AMP KK)<br>170366-1 (Tyco Electronics AMP KK) |
| | | Cylindrical Servomotors, 3,000 r/min, 1 to 1.5 kW<br>Cylindrical Servomotors, 2,000 r/min, 1 to 1.5 kW<br>Cylindrical Servomotors, 1,000 r/min, 900 W | R88A-CAGB□□□SR<br>The empty boxes in the model number are for the cable length. The cable can be 3, 5, 10, 15, 20, 30, 40, or 50 m long. | 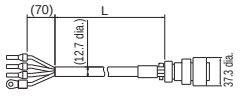 **[Servomotor Connector]**<br>Straight plug:<br>N/MS3106B20-4S<br>(Japan Aviation Electronics Industry, Ltd.)<br>Cable clamp:<br>N/MS3057-12A<br>(Japan Aviation Electronics Industry, Ltd.) |
| | | Cylindrical Servomotors, 3,000 r/min, 2 kW<br>Cylindrical Servomotors, 2,000 r/min, 2 kW | R88A-CAGC□□□SR<br>The empty boxes in the model number are for the cable length. The cable can be 3, 5, 10, 15, 20, 30, 40, or 50 m long. | 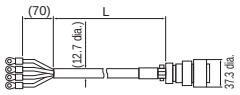 **[Servomotor Connector]**<br>Straight plug:<br>N/MS3106B20-4S<br>(Japan Aviation Electronics Industry, Ltd.)<br>Cable clamp:<br>N/MS3057-12A<br>(Japan Aviation Electronics Industry, Ltd.) |
| | | Cylindrical Servomotors, 3,000 r/min, 3 to 5 kW<br>Cylindrical Servomotors, 2,000 r/min, 3 to 5 kW<br>Cylindrical Servomotors, 1,000 r/min, 2 to 4.5 kW | R88A-CAGD□□□SR<br>The empty boxes in the model number are for the cable length. The cable can be 3, 5, 10, 15, 20, 30, 40, or 50 m long. | 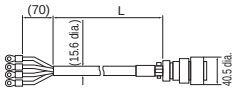 **[Servomotor Connector]**<br>Straight plug:<br>N/MS3106B22-22S<br>(Japan Aviation Electronics Industry, Ltd.)<br>Cable clamp:<br>N/MS3057-12A<br>(Japan Aviation Electronics Industry, Ltd.) |
| | Robot Servomotor Power Cables for Servomotors with Brakes | Cylindrical Servomotors, 3,000 r/min, 1 to 1.5 kW<br>Cylindrical Servomotors, 2,000 r/min, 1 to 1.5 kW<br>Cylindrical Servomotors, 1,000 r/min, 900 W | R88A-CAGB□□□BR<br>The empty boxes in the model number are for the cable length. The cable can be 3, 5, 10, 15, 20, 30, 40, or 50 m long. | 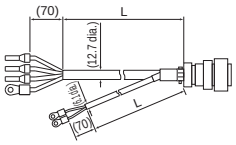 **[Servomotor Connector]**<br>Straight plug:<br>N/MS3106B20-18S<br>(Japan Aviation Electronics Industry, Ltd.)<br>Cable clamp:<br>N/MS3057-12A<br>(Japan Aviation Electronics Industry, Ltd.) |
| | | Cylindrical Servomotors, 3,000 r/min, 2 kW<br>Cylindrical Servomotors, 2,000 r/min, 2 kW | R88A-CAGC□□□BR<br>The empty boxes in the model number are for the cable length. The cable can be 3, 5, 10, 15, 20, 30, 40, or 50 m long. | 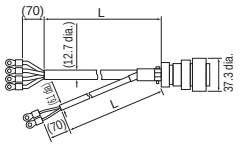 **[Servomotor Connector]**<br>Straight plug:<br>N/MS3106B20-18S<br>(Japan Aviation Electronics Industry, Ltd.)<br>Cable clamp:<br>N/MS3057-12A<br>(Japan Aviation Electronics Industry, Ltd.) |
| | | Cylindrical Servomotors, 3,000 r/min, 3 to 5 kW<br>Cylindrical Servomotors, 2,000 r/min, 3 to 5 kW<br>Cylindrical Servomotors, 1,000 r/min, 2 to 4.5 kW | R88A-CAGD□□□BR<br>The empty boxes in the model number are for the cable length. The cable can be 3, 5, 10, 15, 20, 30, 40, or 50 m long. | 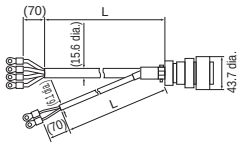 **[Servomotor Connector]**<br>Straight plug:<br>N/MS3106B24-11S<br>(Japan Aviation Electronics Industry, Ltd.)<br>Cable clamp:<br>N/MS3057-16A<br>(Japan Aviation Electronics Industry, Ltd.) |

## ● Brake Cables

| Symbol | Name | Connected to | Model | Description |
|---|---|---|---|---|
| ② | Standard Brake Cables | Cylindrical Servomotors, 3,000 r/min, 50 to 750 W<br>Flat Servomotors, 3,000 r/min, 100 to 400 W | R88A-CAGA□□□B<br>The empty boxes in the model number are for the cable length. The cable can be 3, 5, 10, 15, 20, 30, 40, or 50 m long. | 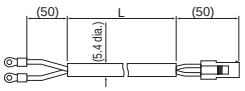 <br>**[Servomotor Connector]**<br>Connector:<br>172157-1 (Tyco Electronics AMP KK)<br>Connector pins:<br>170362-1 (Tyco Electronics AMP KK)<br>170366-1 (Tyco Electronics AMP KK) |
| | | Cylindrical Servomotors, 1,500 r/min, 7.5 kW<br>Cylindrical Servomotors, 1,000 r/min, 6 kW | R88A-CAGE□□□B<br>The empty boxes in the model number are for the cable length. The cable can be 3, 5, 10, 15, 20, 30, 40, or 50 m long. | 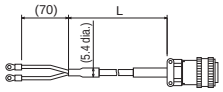 <br>**[Servomotor Connector]**<br>Straight plug:<br>N/MS3106B14-2S<br>(Japan Aviation Electronics Industry, Ltd.)<br>Cable clamp:<br>N/MS3057-6A<br>(Japan Aviation Electronics Industry, Ltd.) |
| | Robot Brake Cables | Cylindrical Servomotors, 3,000 r/min, 50 to 750 W<br>Flat Servomotors, 3,000 r/min, 100 to 400 W | R88A-CAGA□□□BR<br>The empty boxes in the model number are for the cable length. The cable can be 3, 5, 10, 15, 20, 30, 40, or 50 m long. | 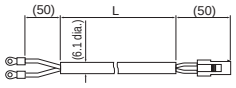 <br>**[Servomotor Connector]**<br>Connector:<br>172157-1 (Tyco Electronics AMP KK)<br>Connector pins:<br>170362-1 (Tyco Electronics AMP KK)<br>170366-1 (Tyco Electronics AMP KK) |

## ● Encoder Cables (for CN2)

| Symbol | Name | Connected to | Model | Description |
|---|---|---|---|---|
| ③ | Standard Encoder Cables with Connectors | Cylindrical Servomotors, 3,000 r/min, 50 to 750 W, absolute encoder<br>Flat Servomotors, 3,000 r/min, 100 to 400 W, absolute encoder | R88A-CRGA□□□C<br>The empty boxes in the model number are for the cable length. The cable can be 3, 5, 10, 15, 20, 30, 40, or 50 m long. | **[Servo Drive Connector]**<br>Connector:<br>3 to 20 m:<br>Crimped I/O connector:<br>(Molex Japan Co., Ltd.)<br>30 to 50 m: 55100-0670<br>(Molex Japan Co., Ltd.)<br>Connector pins:<br>50639-8028<br>(Molex Japan Co., Ltd.)<br> 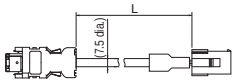 <br>**[Servomotor Connector]**<br>Connector:<br>172161-1<br>(Tyco Electronics AMP KK)<br>Connector pins:<br>170365-1<br>(Tyco Electronics AMP KK)<br>171639-1<br>(Tyco Electronics AMP KK) |
| | | Cylindrical Servomotors, 3,000 r/min, 50 to 750 W, incremental encoder<br>Flat Servomotors, 3,000 r/min, 100 to 400 W, incremental encoder | R88A-CRGB□□□C<br>The empty boxes in the model number are for the cable length. The cable can be 3, 5, 10, 15, 20, 30, 40, or 50 m long. | **[Servo Drive Connector]**<br>Connector:<br>3 to 20 m:<br>Crimped I/O connector:<br>(Molex Japan Co., Ltd.)<br>30 to 50 m: 55100-0670<br>(Molex Japan Co., Ltd.)<br>Connector pins:<br>50639-8028<br>(Molex Japan Co., Ltd.)<br> 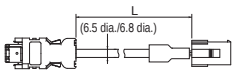 <br>**[Servomotor Connector]**<br>Connector:<br>172160-1<br>(Tyco Electronics AMP KK)<br>Connector pins:<br>170365-1<br>(Tyco Electronics AMP KK)<br>171639-1<br>(Tyco Electronics AMP KK) |
| | | Cylindrical Servomotors, 3,000 r/min,1 to 1.5 kW<br>Cylindrical Servomotors, 2,000 r/min,1 to 5 kW<br>Cylindrical Servomotors, 1,500 r/min, 7.5 kW<br>Cylindrical Servomotors, 1,000 r/min, 900 W to 6 kW | R88A-CRGC□□□N<br>The empty boxes in the model number are for the cable length. The cable can be 3, 5, 10, 15, 20, 30, 40, or 50 m long. | **[Servo Drive Connector]**<br>Connector:<br>3 to 20 m:<br>Crimped I/O connector:<br>(Molex Japan Co., Ltd.)<br>30 to 50 m: 55100-0670<br>(Molex Japan Co., Ltd.)<br>Connector pins:<br>50639-8028<br>(Molex Japan Co., Ltd.)<br> 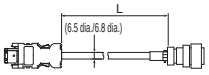 <br>**[Servomotor Connector]**<br>Straight plug:<br>N/MS3106B20-29S<br>(Japan Aviation Electronics Industry, Ltd.)<br>Cable clamp:<br>N/MS3057-12A<br>(Japan Aviation Electronics Industry, Ltd.) |
| | Robot Encoder Cables with Connectors | Cylindrical Servomotors, 3,000 r/min,50 to 750 W, absolute encoder<br>Flat Servomotors, 3,000 r/min, 100 to 400 W, absolute encoder | R88A-CRGA□□□CR<br>The empty boxes in the model number are for the cable length. The cable can be 3, 5, 10, 15, 20, 30, 40, or 50 m long. | **[Servo Drive Connector]**<br>Connector:<br>Crimped I/O connector:<br>(Molex Japan Co., Ltd.)<br>Connector pins:<br>50639-8028<br>(Molex Japan Co., Ltd.)<br> 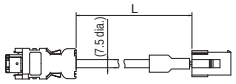 <br>**[Servomotor Connector]**<br>Connector:<br>172161-1<br>(Tyco Electronics AMP KK)<br>Connector pins:<br>170365-1<br>(Tyco Electronics AMP KK) |
| | | Cylindrical Servomotors, 3,000 r/min, 50 to 750 W, incremental encoder<br>Flat Servomotors, 3,000 r/min, 100 to 400 W, incremental encoder | R88A-CRGB□□□CR<br>The empty boxes in the model number are for the cable length. The cable can be 3, 5, 10, 15, 20, 30, 40, or 50 m long. | **[Servo Drive Connector]**<br>Connector:<br>Crimped I/O connector:<br>(Molex Japan Co., Ltd.)<br>Connector pins:<br>50639-8028<br>(Molex Japan Co., Ltd.)<br> 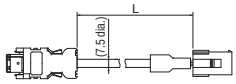 <br>**[Servomotor Connector]**<br>Connector:<br>172160-1<br>(Tyco Electronics AMP KK)<br>Connector pins:<br>170365-1<br>(Tyco Electronics AMP KK) |
| | | Cylindrical Servomotors, 3,000 r/min,1 to 1.5 kW<br>Cylindrical Servomotors, 2,000 r/min,1 to 5 kW<br>Cylindrical Servomotors, 1,500 r/min, 7.5 kW<br>Cylindrical Servomotors, 1,000 r/min, 900 W to 6 kW | R88A-CRGC□□□NR<br>The empty boxes in the model number are for the cable length. The cable can be 3, 5, 10, 15, 20, 30, 40, or 50 m long. | **[Servo Drive Connector]**<br>Connector:<br>Crimped I/O connector:<br>(Molex Japan Co., Ltd.)<br>Connector pins:<br>50639-8028<br>(Molex Japan Co., Ltd.)<br> 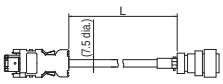 <br>**[Servomotor Connector]**<br>Straight plug:<br>N/MS3106B20-29S<br>(Japan Aviation Electronics Industry, Ltd.)<br>Cable clamp:<br>N/MS3057-12A<br>(Japan Aviation Electronics Industry, Ltd.) |

## ● Absolute Encoder Backup Battery and Absolute Encoder Battery Cable

| Symbol | Name | Contents | Length (m) | Model | Description |
|---|---|---|---|---|---|
| ④ | Absolute Encoder Battery Cable | Battery not included. | 0.3 m | R88A-CRGD0R3C | 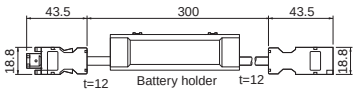 |
| | | One R88A-BAT01G Battery included. | 0.3 m | R88A-CRGD0R3C-BS | |
| | Absolute Encoder Backup Battery | – | – | R88A-BAT01G | – |

## ● RS-232 Communications Connector (for CN3)

| Symbol | Name | Contents | Length (m) | Model |
|---|---|---|---|---|
| ⑤ | Parameter Unit | – | 1.5 m | R88A-PR02G |
| ⑥ | Personal Computer Monitor Cable | for Windows<br>RS232 Communications | 2 m | R88A-CCG002P2 |

## ● MECHATROLINK-II Cable (for CN6)

| Symbol | Name | Length (m) | OMRON model Number | Yasukawa model Nunber | Description |
|---|---|---|---|---|---|
| ⑦ | MECHATROLINK-II Communication Cable<br>*Can be connected to R88D-GN and R88D-KN only. | 0.5 m | FNY-W6002-A5 | JEPMC-W6002-A5-E | (without ring core and USB connector on both ends)<br> 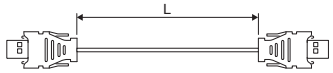 |
| | | 1 m | FNY-W6002-01 | JEPMC-W6002-01-E | |
| | | 3 m | FNY-W6002-03 | JEPMC-W6002-03-E | |
| | | 5 m | FNY-W6002-05 | JEPMC-W6002-05-E | |
| | MECHATROLINK-II Communication Cable | 0.5 m | FNY-W6003-A5 | JEPMC-W6003-A5 | (without ring core and USB connector on both ends)<br> 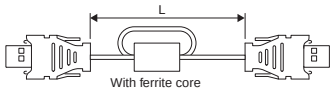 |
| | | 1.0 m | FNY-W6003-01 | JEPMC-W6003-01 | |
| | | 3.0 m | FNY-W6003-03 | JEPMC-W6003-03 | |
| | | 5.0 m | FNY-W6003-05 | JEPMC-W6003-05 | |
| | | 10 m | FNY-W6003-10 | JEPMC-W6003-10 | |
| | | 20 m | FNY-W6003-20 | JEPMC-W6003-20 | |
| | | 30 m | FNY-W6003-30 | JEPMC-W6003-30 | |
| ⑧ | MECHATROLINK-II Termination resistor | – | FNY-W6022 | JEPMC-W6022 | – |

## ● Control Cables (for CN1)

| Symbol | Name | Connected to | Model | Description |
|---|---|---|---|---|
| ⑨ | Connector Termial Block Cables | – | XW2Z-□□□J-B33<br>The empty boxes in the model number are for the cable length.<br>The cable can be 1, or 2 m long. | 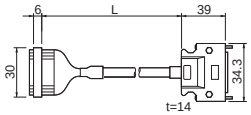 |
| | Connector Terminal Block Conversion Unit | M3 screw type | XW2B-20G4 | – |
| | | M3.5 screw type | XW2B-20G5 | |
| | | M3 screw type | XW2D-20G6 | |

## ● Control Cables

| Symbol | Name | Connected to | Model |
|---|---|---|---|
| – | Servomoteor Connector for Encoder Cable, absolute Encoder | for moter | R88A-CNG01R |
| – | Servomoteor Connector for Encoder Cable, Incremental Encoder | for moter | R88A-CNG02R |
| ⑩ | Control I/O Connector (CN1) | for drive | R88A-CNU01C |
| – | Encoder Connector (CN2) | – | R88A-CNW01R |
| – | Power Cable Connector (750 W max.) | – | R88A-CNG01A |
| – | Brake Cable Connector (750 W max.) | – | R88A-CNG01B |

# Servo Drive Specifications (R88D-GN□-ML2)

## ● General Specifications

| Item | | | Specifications |
|---|---|---|---|
| Ambient operating temperature and humidity | | | 0 to 55°C, 90% RH max. (with no condensation) |
| Ambient storage temperature and humidity | | | –20 to 65°C, 90% RH max. (with no condensation) |
| Operating and storage atmosphere | | | No corrosive gases |
| Vibration resistance | | | Smaller of either 10 to 60 Hz with double amplitude of 0.1 mm or acceleration of 5.88 m/s² max. in X, Y, and Z directions. |
| Impact resistance | | | Acceleration of 19.6m/s² max. 2 times each in X, Y, and Z directions |
| Insulation resistance | | | Between power supply/power line terminals and frame ground: 0.5 MΩ min. (at 500 VDC) |
| Dielectric strength | | | Between power supply/power line terminals and frame ground: 1,500 VAC for 1 min at 50/60 Hz<br>Between each control signal and frame ground: 500 VAC for 1 min |
| Protective structure | | | Built into panel (IP10). |
| International standards | EC Directives | EMC Directive | EN 55011 Class A Group 1 |
| | | | EN 61000-6-2, IEC 61000-4-2/-3/-4/-5/-6/-11 |
| | | Low Voltage Directive | EN 50178 |
| | UL standards | | UL 508C |
| | CSA standards | | CSA C22.2 No.14 |
| | Korean Radio Regulations (KC) | | Certified |

**Note: 1.** The above items reflect individual evaluation testing. The results may differ under compound conditions.
**Note: 2.** Always disconnect all connections to the Servo Drive before you perform insulation resistance tests on it. If you perform an insulation resistance test while the Servo Drive is connected, the Servo Drive may be damaged.
Never perform dielectric strength tests on the Servo Drive. Failure to follow this precaution may result in damaging internal elements.
**Note: 3.** Depending on the operating conditions, some Servo Drive parts will require maintenance.
**Note: 4.** The service life of the Servo Drive is 28,000 hours at an average ambient temperature of 55°C at 100% of the rated torque.

## ● Characteristics

### Servo Drives with 100-VAC Input Power

| Item | | | | R88D-GNA5L-ML2 | R88D-GN01L-ML2 | R88D-GN02L-ML2 | R88D-GN04L-ML2 |
|---|---|---|---|---|---|---|---|
| Continuous output current (rms) | | | | 1.3 A | 1.8 A | 2.4 A | 4.9 A |
| Momentary maximum output current (rms) | | | | 3.9 A | 5.4 A | 7.2 A | 14.7 A |
| Input power supply | Main circuit | Power supply capacity | | 0.4 KVA | 0.4 KVA | 0.5 KVA | 0.9 KVA |
| | | Power supply voltage | | Single-phase 100 to 115 VAC (85 to 127 V), 50/60 Hz | | | |
| | | Rated current | | 1.4 A | 2.2 A | 3.7 A | 6.6 A |
| | Control circuit | Power supply voltage | | Single-phase 100 to 115 VAC (85 to 127 V), 50/60 Hz | | | |
| | | Rated current | | 0.09 A | 0.09 A | 0.09 A | 0.09 A |
| Heat generated | Main circuit | | | 10.1 W | 14.4 W | 18.4 W | 41.4 W |
| | Control circuit | | | 4.4 W | 4.4 W | 4.4 W | 4.4 W |
| Control method | | | | All-digital servo | | | |
| Inverter method | | | | IGBT-driven PWM method | | | |
| PWM frequency | | | | 12.0 kHz | | 6.0 kHz | |
| Weight | | | | Approx. 0.8 kg | Approx. 0.8 kg | Approx. 1.1 kg | Approx. 1.5 kg |
| Maximum applicable motor capacity | | | | 50 W | 100 W | 200 W | 400 W |
| Applicable Servomotors (R88M-) | 3,000-r/min Servomotors | | INC | G05030H | G10030L | G20030L | G40030L |
| | | | ABS | G05030T | G10030S | G20030S | G40030S |
| | 3,000-r/min Flat Servomotors | | INC | – | GP10030L | GP20030L | GP40030L |
| | | | ABS | – | GP10030S | GP20030S | GP40030S |
| | 2,000-r/min Servomotors | | ABS | – | – | – | – |
| | 1,000-r/min Servomotors | | ABS | – | – | – | – |
| Performance | Speed control range | | | 1:5000 | | | |
| | Speed variability: Load characteristic | | | 0.01% or less at 0% to 100% (at rated speed) | | | |
| | Speed variability: Voltage characteristic | | | 0% at ±10% of rated voltage (at rated speed) | | | |
| | Speed variability: Temperature characteristic | | | ±0.1% or less at 0 to 50°C (at rated speed) | | | |
| | Torque control reproducibility | | | ±3% | | | |

## Servo Drives with Single-phase 200-VAC Input Power

| Item | | | | R88D-GN01H-ML2 | R88D-GN02H-ML2 | R88D-GN04H-ML2 | R88D-GN08H-ML2 | R88D-GN10H-ML2 | R88D-GN15H-ML2 |
|---|---|---|---|---|---|---|---|---|---|
| Continuous output current (rms) | | | | 1.16 A | 1.6 A | 2.7 A | 4.0 A | 5.9 A | 9.8 A |
| Momentary maximum output current (rms) | | | | 3.5 A | 5.3 A | 7.1 A | 14.1 A | 21.2 A | 28.3 A |
| Input power supply | Main circuit | Power supply capacity | | 0.5 KVA | 0.5 KVA | 0.9 KVA | 1.3 KVA | 1.8 KVA | 2.3 KVA |
| | | Power supply voltage | | Single-phase 200 to 240 VAC (170 to 264 V), 50/60 Hz | | | Single-phase or Three-phase 200 to 240 VAC (170 to 264 V), 50/60 Hz | | |
| | | Rated current | | 1.3 A | 2.0 A | 3.7 A | 5.0/3.3*1A | 7.5/4.1*1A | 11/8.0*1A |
| | Control circuit | Power supply voltage | | Single-phase 200 to 240 VAC (170 to 264 V), 50/60 Hz | | | | | |
| | | Rated current | | 0.05 A | 0.05 A | 0.05 A | 0.05 A | 0.07 A | 0.07 A |
| Heat generated | Main circuit | | | 14.3 W | 14.8 W | 23.6 W | 38.7 W | 52.9 W | 105.9 W |
| | Control circuit | | | 4.5 W | 4.5 W | 4.5 W | 4.3 W | 6.1 W | 6.1 W |
| PWM frequency | | | | 12.0 kHz | | 6.0 kHz | | | |
| Weight | | | | Approx. 0.8 kg | Approx. 0.8 kg | Approx. 1.1 kg | Approx. 1.5 kg | Approx. 1.7 kg | Approx. 1.7 kg |
| Maximum applicable motor capacity | | | | 100 W | 200 W | 400 W | 750 W | 1 kW | 1.5 kW |
| Applicable Servomotors (R88M-) | 3,000-r/min Servomotors | | INC | G05030H G10030H | G20030H | G40030H | G75030H | – | – |
| | | | ABS | G05030T G10030T | G20030T | G40030T | G75030T | – | G1K030T G1K530T |
| | 3,000-r/min Flat Servomotors | | INC | GP10030H | GP20030H | GP40030H | – | – | – |
| | | | ABS | GP10030T | GP20030T | GP40030T | – | – | – |
| | 2,000-r/min Servomotors | | ABS | – | – | – | – | G1K020T | G1K520T |
| | 1,000-r/min Servomotors | | ABS | – | – | – | – | – | G90010T |
| Control method | | | | All-digital servo | | | | | |
| Inverter method | | | | IGBT-driven PWM method | | | | | |
| Performance | Speed control range | | | 1:5000 | | | | | |
| | Speed variability: Load characteristic | | | 0.01% or less at 0% to 100% (at rated speed) | | | | | |
| | Speed variability: Voltage characteristic | | | 0% at ±10% of rated voltage (at rated speed) | | | | | |
| | Speed variability: Temperature characteristic | | | ±0.1% or less at 0 to 50°C (at rated speed) | | | | | |
| | Torque control reproducibility | | | ±3% | | | | | |

*1. The left value is for single-phase input power and the right value is for three-phase input power.

## Servo Drives with Three-phase 200-VAC Input Power

| Item | | | | R88D-GN20H-ML2 | R88D-GN30H-ML2 | R88D-GN50H-ML2 | R88D-GN75H-ML2 |
|---|---|---|---|---|---|---|---|
| Continuous output current (rms) | | | | 14.3 A | 17.4 A | 31.0 A | 45.4 A |
| Momentary maximum output current (rms) | | | | 45.3 A | 63.6 A | 84.8 A | 170.0 A |
| Input power supply | Main circuit | Power supply capacity | | 3.3 KVA | 4.5 KVA | 7.5 KVA | 11 KVA |
| | | Power supply voltage | | Three-phase 200 to 230 VAC (170 to 253 V), 50/60 Hz | | | |
| | | Rated current | | 10.2 A | 15.2 A | 23.7 A | 35.0 A |
| | Control circuit | Power supply voltage | | Single-phase 200 to 230 VAC (170 to 253 V), 50/60 Hz | | | |
| | | Rated current | | 0.1 A | 0.12 A | 0.12 A | 0.14 A |
| Heat generated | Main circuit | | | 112.3 W | 219.6 W | 391.7 W | 376.2 W |
| | Control circuit | | | 10.7 W | 13.3 W | 13.3 W | 13.8 W |
| PWM frequency | | | | 6.0 kHz | | | |
| Weight | | | | Approx. 3.2 kg | Approx. 6.0 kg | Approx. 6.0 kg | Approx. 16.4 kg |
| Maximum applicable motor capacity | | | | 2 kW | 3 kW | 5 kW | 7.5 kW |
| Applicable Servomotors (R88M-) | 3,000-r/min Servomotors | | INC | – | – | – | – |
| | | | ABS | G2K030T | G3K030T | G4K030T<br>G5K030T | – |
| | 3,000-r/min Flat Servomotors | | INC | – | – | – | – |
| | | | ABS | – | – | – | – |
| | 2,000-r/min Servomotors | | ABS | G2K020T | G3K020T | G4K020T<br>G5K020T | G7K515T |
| | 1,000-r/min Servomotors | | ABS | – | G2K010T | G3K010T<br>G4K510T | G6K010T |
| Control method | | | | All-digital servo | | | |
| Inverter method | | | | IGBT-driven PWM method | | | |
| Performance | Speed control range | | | 1:5000 | | | |
| | Speed variability: Load characteristic | | | 0.01% or less at 0% to 100% (at rated speed) | | | |
| | Speed variability: Voltage characteristic | | | 0% at ±10% of rated voltage (at rated speed) | | | |
| | Speed variability: Temperature characteristic | | | ±0.1% or less at 0 to 50°C (at rated speed) | | | |
| | Torque control reproducibility | | | ±3% | | | |

# Servomotor Specifications (R88M-G)

## ● General Specifications

| Item | | | 3,000-r/min Servomotors | | 3,000-r/min Flat Servomotors | 1,000-r/min Servomotors 2,000-r/min Servomotors | |
|---|---|---|---|---|---|---|---|
| | | | 50 to 750 W | 1 to 5 kW | 100 to 400 W | 900 W to 5 kW | 6 to 7.5 kW |
| Ambient operating temperature and humidity | | | 0 to 40°C, 85% RH max. (with no condensation) | | | | |
| Ambient storage temperature and humidity | | | −20 to 65°C, 85% RH max. (with no condensation) | −20 to 80°C, 85% max. (with no condensation) | | | |
| Operating and storage atmosphere | | | No corrosive gases | | | | |
| Vibration resistance *1 | | | 10 to 2,500 Hz Acceleration of 49 m/s² max. in the X, Y, and Z directions | 10 to 2,500 Hz Acceleration of 24.5 m/s² max. in the X, Y, and Z directions | 10 to 2,500 Hz Acceleration of 49 m/s² max. in the X, Y, and Z directions | 10 to 2,500 Hz Acceleration of 24.5 m/s² max. in the X, Y, and Z directions | |
| Impact resistance | | | Acceleration of 98 m/s² max. 3 times each in the X, Y, and Z directions | | | Acceleration of 98 m/s²max. 2 times vertically | |
| Insulation resistance | | | 20 MΩ min. at 500 VDC between the power terminals and FG terminal | | | | |
| Dielectric strength | | | 1,500 VAC (50 or 60 Hz) for 1 minute between the power terminals and FG terminal | | | | |
| Operating position | | | All directions | | | | |
| Insulation grade | | | Type B | Type F | Type B | Type F | |
| Structure | | | Totally enclosed, self-cooling | | | | |
| Protective structure | | | IP65 (excluding the output shaft rotating section and lead wire ends) | | | | |
| Vibration grade | | | V-15 | | | | |
| Mounting method | | | Flange-mounting | | | | |
| International standards | EC Directives | Low-voltage Directive | IEC 60034-1/-5 | | | | |
| International standards | UL standards | | UL1004-1 | | | | – |
| International standards | CSA standards | | CSA 22.2 No.100 | | | | |

*1. The amplitude may be amplified by mechanical resonance. Do not exceed 80% of the specified value for extended periods of time.

**Note: 1.** Do not use the cable when it is laid in oil or water.
**Note: 2.** Do not expose the cable outlet or connections to stress due to bending or the weight of the cable itself.
**Note: 3.** Always disconnect all connections to the Servo Drive before you perform insulation resistance tests on it. If you perform an insulation resistance test while the Servo Drive is connected, the Servo Drive may be damaged.
Never perform dielectric strength tests on the Servo Drive. Failure to follow this precaution may result in damaging internal elements.

# Servomoter Specifications (R88M-G)

## ● Characteristics

### 3,000-r/min Cylindrical Servomotors

### 100-VAC Input Power

| Item | | Model (R88M-) / Unit | G05030H / G05030T | G10030L / G10030S | G20030L / G20030S | G40030L / G40030S |
|---|---|---|---|---|---|---|
| Rated output *1 | | W | 50 | 100 | 200 | 400 |
| Rated torque *1 | | N·m | 0.16 | 0.32 | 0.64 | 1.3 |
| Rated rotation speed | | r/min | 3000 | | | |
| Max. momentary rotation speed | | r/min | 5000 | | | |
| Max. momentary torque *1 | | N·m | 0.45 | 0.93 | 1.78 | 3.6 |
| Rated current *1 | | A (rms) | 1.1 | 1.7 | 2.5 | 4.6 |
| Max. momentary current *1 | | A (rms) | 3.4 | 5.1 | 7.6 | 13.9 |
| Rotor inertia | | kg·m² (GD²/4) | $2.5 \times 10^{-6}$ | $5.1 \times 10^{-6}$ | $1.4 \times 10^{-5}$ | $2.6 \times 10^{-5}$ |
| Applicable load inertia | | — | 30 times the rotor inertia max.*2 | | | |
| Torque constant *1 | | N·m/A | 0.14 | 0.19 | 0.26 | 0.28 |
| Power rate *1 | | kW/s | 10.4 | 20.1 | 30.3 | 62.5 |
| Mechanical time constant | | ms | 1.56 | 1.11 | 0.72 | 0.55 |
| Electrical time constant | | ms | 0.7 | 0.8 | 2.5 | 2.9 |
| Allowable radial load *3 | | N | 68 | 68 | 245 | 245 |
| Allowable thrust load *3 | | N | 58 | 58 | 98 | 98 |
| Weight | Without brake | kg | Approx. 0.3 | Approx. 0.5 | Approx. 0.8 | Approx. 1.2 |
| | With brake | kg | Approx. 0.5 | Approx. 0.7 | Approx. 1.3 | Approx. 1.7 |
| Radiation shield dimensions (material) | | | 100 × 80 × t10 (Al) | | 130 × 120 × t12 (Al) | |
| Applicable Servo Drives (R88D-) | | | GNA5L-ML2 | GN01L-ML2 | GN02L-ML2 | GN04L-ML2 |
| Brake specifications | Brake inertia | kg·m² (GD²/4) | $2 \times 10^{-7}$ | $2 \times 10^{-7}$ | $1.8 \times 10^{-6}$ | $1.8 \times 10^{-6}$ |
| | Excitation voltage *4 | V | 24 VDC ±5% | | | |
| | Power consumption (at 20°C) | W | 7 | 7 | 9 | 9 |
| | Current consumption (at 20°C) | A | 0.3 | 0.3 | 0.36 | 0.36 |
| | Static friction torque | N·m | 0.29 min. | 0.29 min. | 1.27 min. | 1.27 min. |
| | Attraction time *5 | ms | 35 max. | 35 max. | 50 max. | 50 max. |
| | Release time *5 | ms | 20 max. | 20 max. | 15 max. | 15 max. |
| | Backlash | | ±1° | | | |
| | Allowable work per braking | J | 39.2 | 39.2 | 137 | 137 |
| | Allowable total work | J | $4.9 \times 10^3$ | $4.9 \times 10^3$ | $44.1 \times 10^3$ | $44.1 \times 10^3$ |
| | Allowable angular acceleration | rad/s² | 30,000 max. (Speed of 2,800 r/min or more must not be changed in less than 10 ms) | | | |
| | Brake life | — | 10,000,000 operations | | | |
| | Rating | — | Continuous | | | |
| | Insulation grade | — | Type F | | | |

*1. These are the values when the Servomotor is combined with a Servo Drive at room temperature (20°C, 65%). The maximum momentary torque shown above indicates the standard value.

*2. Applicable Load Inertia:
- The operable load inertia ratio (load inertia/rotor inertia) depends on the mechanical configuration and its rigidity. For a machine with high rigidity, operation is possible even with high load inertia. Select an appropriate motor and confirm that operation is possible.
- If the dynamic brake is activated frequently with high load inertia, the dynamic brake resistor may burn. Do not repeatedly turn the Servomotor ON and OFF while the dynamic brake is enabled.
- The dynamic brake is designed only for emergency stops. Design the system so that the Servomotor remains stopped for at least 3 minutes after applying the dynamic brake. Otherwise the dynamic brake circuits may fail.

*3. The allowable radial and thrust loads are the values determined for a service life of 20,000 hours at normal operating temperatures. The allowable radial loads are applied as shown in the following diagram.

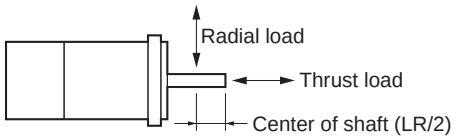


*4. This is an OFF brake. (It is reset when excitation voltage is applied).

*5. The operation time is the value (reference value) measured with a surge suppressor (CR50500 manufactured by Okaya Electric Industries Co., Ltd.).

## Torque and Rotation Speed Characteristics

### 3,000-r/min Cylindrical Servomotors

- **3,000-r/min Servomotors with 100-VAC Power Input**

The following graphs show the characteristics with a 3-m standard cable and a 100-VAC input.

**R88M-G05030H/T (50 W)**

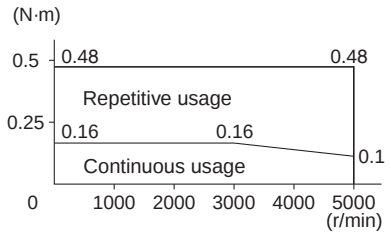


**R88M-G10030L/S (100 W)**

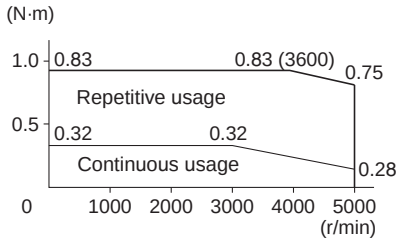


**R88M-G20030L/S (200 W)**

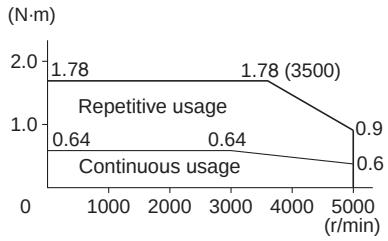


**R88M-G40030L/S (400 W)**

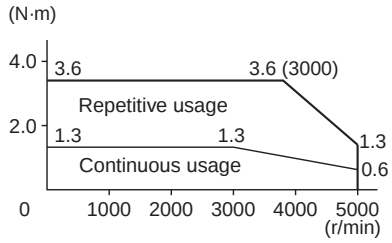

# Servomotor Specifications (R88M-G)

## ● Characteristics

### 3,000-r/min Cylindrical Servomotors

### 200-VAC Input Power

| Item | | Model (R88M-) / Unit | G05030H / G05030T | G10030H / G10030T | G20030H / G20030T | G40030H / G40030T | G75030H / G75030T | – / G1K030T | – / G1K530T | – / G2K030T | – / G3K030T | – / G4K030T | – / G5K030T |
|---|---|---|---|---|---|---|---|---|---|---|---|---|---|
| Rated output *1 | | W | 50 | 100 | 200 | 400 | 750 | 1000 | 1500 | 2000 | 3000 | 4000 | 5000 |
| Rated torque *1 | | N·m | 0.16 | 0.32 | 0.64 | 1.3 | 2.4 | 3.18 | 4.77 | 6.36 | 9.54 | 12.6 | 15.8 |
| Rated rotation speed | | r/min | 3000 | | | | | | | | | | |
| Max. momentary rotation speed | | r/min | 5000 | | | | 4500 | 5000 | | | | 4500 | |
| Max. momentary torque *1 | | N·m | 0.45 | 0.90 | 1.78 | 3.67 | 7.05 | 9.1 | 12.8 | 18.4 | 27.0 | 36.3 | 45.1 |
| Rated current *1 | | A (rms) | 1.1 | 1.1 | 1.6 | 2.6 | 4 | 7.2 | 9.4 | 13 | 18.6 | 24.7 | 28.5 |
| Max. momentary current *1 | | A (rms) | 3.4 | 3.4 | 4.9 | 7.9 | 12.1 | 21.4 | 28.5 | 40 | 57.1 | 75 | 85.7 |
| Rotor inertia | | kg·m² (GD²/4) | $2.5 \times 10^{-6}$ | $5.1 \times 10^{-6}$ | $1.4 \times 10^{-5}$ | $2.6 \times 10^{-5}$ | $8.7 \times 10^{-5}$ | $1.69 \times 10^{-4}$ | $2.59 \times 10^{-4}$ | $3.46 \times 10^{-4}$ | $6.77 \times 10^{-4}$ | $1.27 \times 10^{-3}$ | $1.78 \times 10^{-3}$ |
| Applicable load inertia | | – | 30 times the rotor inertia max.*2 | | | | 20 times the rotor inertia max.*2 | 15 times the rotor inertia max.*2 | | | | | |
| Torque constant *1 | | N·m/A | 0.14 | 0.19 | 0.41 | 0.51 | 0.64 | 0.44 | 0.51 | 0.48 | 0.51 | 0.51 | 0.57 |
| Power rate *1 | | kW/s | 10.4 | 20.1 | 30.3 | 62.5 | 66 | 60 | 88 | 117 | 134 | 125 | 140 |
| Mechanical time constant | | ms | 1.56 | 1.1 | 0.71 | 0.52 | 0.45 | 0.78 | 0.54 | 0.53 | 0.46 | 0.51 | 0.46 |
| Electrical time constant | | ms | 0.7 | 0.79 | 2.6 | 3 | 4.6 | 6.7 | 10 | 10.8 | 20 | 20 | 20 |
| Allowable radial load *3 | | N | 68 | 68 | 245 | 245 | 392 | 392 | 490 | 490 | 490 | 784 | 784 |
| Allowable thrust load *3 | | N | 58 | 58 | 98 | 98 | 147 | 147 | 196 | 196 | 196 | 343 | 343 |
| Weight | Without brake | kg | Approx. 0.3 | Approx. 0.5 | Approx. 0.8 | Approx. 1.2 | Approx. 2.3 | Approx. 4.5 | Approx. 5.1 | Approx. 6.5 | Approx. 9.3 | Approx. 12.9 | Approx. 17.3 |
| | With brake | kg | Approx. 0.5 | Approx. 0.7 | Approx. 1.3 | Approx. 1.7 | Approx. 3.1 | Approx. 5.1 | Approx. 6.5 | Approx. 7.9 | Approx. 11 | Approx. 14.8 | Approx. 19.2 |
| Radiation shield dimensions (material) | | | 100 × 80 × t10 (Al) | | 130 × 120 × t12 (Al) | | 170 × 160 × t12 (Al) | | 320 × 300 × t30 (Al) | 320 × 300 × t20 (Al) | 380 × 350 × t30 (Al) | | |
| Applicable Servo Drives (R88D-) | | | GN01H-ML2 | GN01H-ML2 | GN02H-ML2 | GN04H-ML2 | GN08H-ML2 | GN15H-ML2 | GN15H-ML2 | GN20H-ML2 | GN30H-ML2 | GN50H-ML2 | GN50H-ML2 |
| Brake specifications | Brake inertia | kg·m² (GD²/4) | $2 \times 10^{-7}$ | $2 \times 10^{-7}$ | $1.8 \times 10^{-6}$ | $1.8 \times 10^{-6}$ | $7.5 \times 10^{-6}$ | $2.5 \times 10^{-5}$ | $3.3 \times 10^{-5}$ | $3.3 \times 10^{-5}$ | $3.3 \times 10^{-5}$ | $1.35 \times 10^{-4}$ | $1.35 \times 10^{-4}$ |
| | Excitation voltage *4 | V | 24 VDC ±5% | | | | | 24 VDC ±10% | | | | | |
| | Power consumption (at 20°C) | W | 7 | 7 | 9 | 9 | 10 | 18 | 19 | 19 | 19 | 22 | 22 |
| | Current consumption (at 20°C) | A | 0.3 | 0.3 | 0.36 | 0.36 | 0.42 | 0.74 | 0.81 | 0.81 | 0.81 | 0.9 | 0.9 |
| | Static friction torque | N·m | 0.29 min. | 0.29 min. | 1.27 min. | 1.27 min. | 2.45 min. | 4.9 min. | 7.8 min. | 7.8 min. | 11.8 min. | 16.1 min. | 16.1 min. |
| | Attraction time *5 | ms | 35 max. | 35 max. | 50 max. | 50 max. | 70 max. | 50 max. | 50 max. | 50 max. | 80 max. | 110 max. | 110 max. |
| | Release time *5 | ms | 20 max. | 20 max. | 15 max. | 15 max. | 20 max. | 15 max. | 15 max. | 15 max. | 15 max. | 50 max. | 50 max. |
| | Backlash | | ±1° | | | | | | | | | | |
| | Allowable work per braking | J | 39.2 | 39.2 | 137 | 137 | 196 | 392 | 392 | 392 | 392 | 1470 | 1470 |
| | Allowable total work | J | $4.9 \times 10^3$ | $4.9 \times 10^3$ | $44.1 \times 10^3$ | $44.1 \times 10^3$ | $147 \times 10^3$ | $2.0 \times 10^5$ | $4.9 \times 10^5$ | $4.9 \times 10^5$ | $4.9 \times 10^5$ | $2.2 \times 10^6$ | $2.2 \times 10^6$ |
| | Allowable angular acceleration | rad/s² | 30,000 max. (Speed of 2,800 r/min or more must not be changed in less than 10 ms) | | | | | 10,000 max. (Speed of 900 r/min or more must not be changed in less than 10 ms) | | | | | |
| | Brake life | – | 10,000,000 operations | | | | | | | | | | |
| | Rating | – | Continuous | | | | | | | | | | |
| | Insulation grade | – | Type F | | | | | | | | | | |

*1. These are the values when the Servomotor is combined with a Servo Drive at room temperature (20°C, 65%). The maximum momentary torque shown above indicates the standard value.

*2. Applicable Load Inertia:
- The operable load inertia ratio (load inertia/rotor inertia) depends on the mechanical configuration and its rigidity. For a machine with high rigidity, operation is possible even with high load inertia. Select an appropriate motor and confirm that operation is possible.
- If the dynamic brake is activated frequently with high load inertia, the dynamic brake resistor may burn. Do not repeatedly turn the Servomotor ON and OFF while the dynamic brake is enabled.
- The dynamic brake is designed only for emergency stops. Design the system so that the Servomotor remains stopped for at least 3 minutes after applying the dynamic brake. Otherwise the dynamic brake circuits may fail.

*3. The allowable radial and thrust loads are the values determined for a service life of 20,000 hours at normal operating temperatures. The allowable radial loads are applied as shown in the following diagram.

*4. This is an OFF brake. (It is reset when excitation voltage is applied).

*5. The operation time is the value (reference value) measured with a surge suppressor (CR50500 manufactured by Okaya Electric Industries Co., Ltd.).

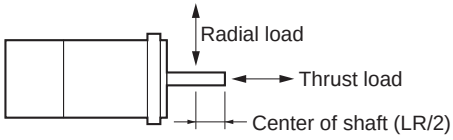

## Torque and Rotation Speed Characteristics

### 3,000-r/min Cylindrical Servomotors

- **3,000-r/min Servomotors with 200-VAC Power Input**

The following graphs show the characteristics with a 3-m standard cable and a 200-VAC input.

**R88M-G05030H/T (50 W)**

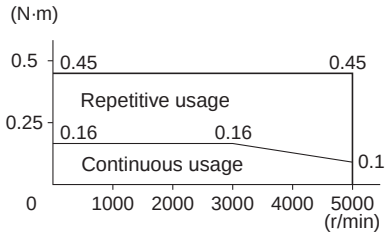


**R88M-G10030H/T (100 W)**

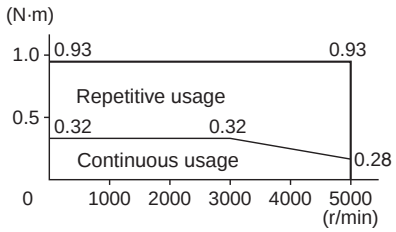


**R88M-G20030H/T (200 W)**

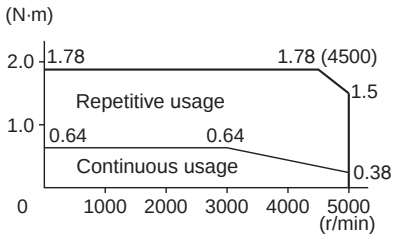


**R88M-G40030H/T (400 W)**

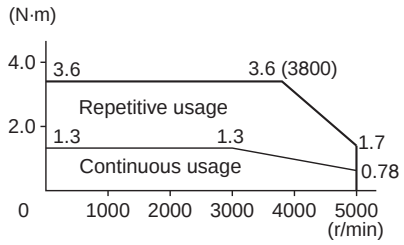


**R88M-G75030H/T (750 W)**

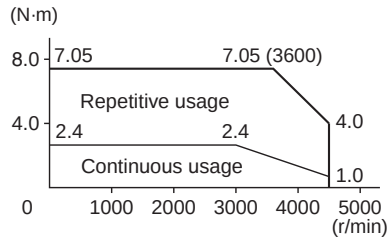


**R88M-G1K030T (1 kW)**

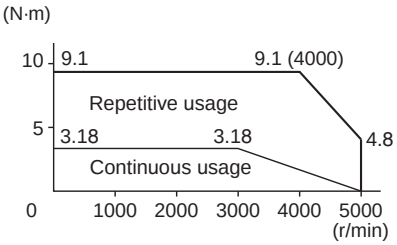


**R88M-G1K530T (1.5 kW)**

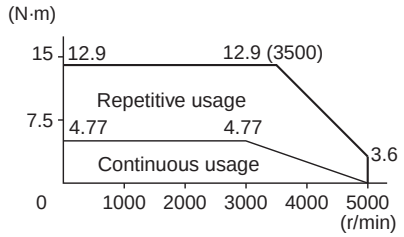


**R88M-G2K030T (2 kW)**

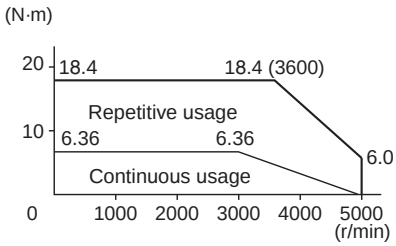


**R88M-G3K030T (3 kW)**

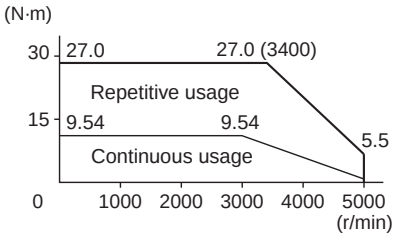


**R88M-G4K030T (4 kW)**

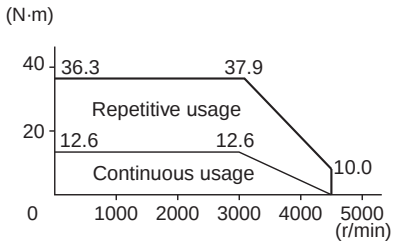


**R88M-G5K030T (5 kW)**

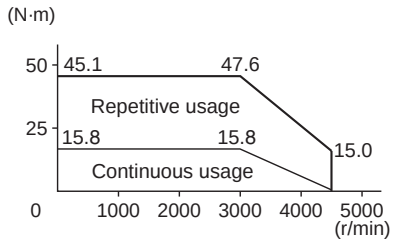

# Servomotor Specifications (R88M-GP)

## ● Characteristics

### 3,000-r/min Flat Servomotors

### 100-VAC/200-VAC Input Powers

| Item | | Unit | 100 VAC | | | 200 VAC | | |
|---|---|---|---|---|---|---|---|---|
| Model (R88M-) | | | GP10030L | GP20030L | GP40030L | GP10030H | GP20030H | GP40030H |
| | | | GP10030S | GP20030S | GP40030S | GP10030T | GP20030T | GP40030T |
| Rated output *1 | | W | 100 | 200 | 400 | 100 | 200 | 400 |
| Rated torque *1 | | N·m | 0.32 | 0.64 | 1.3 | 0.32 | 0.64 | 1.3 |
| Rated rotation speed | | r/min | 3000 | | | | | |
| Max. momentary rotation speed | | r/min | 5000 | | 4500 | 5000 | | |
| Max. momentary torque *1 | | N·m | 0.84 | 1.8 | 3.6 | 0.86 | 1.8 | 3.65 |
| Rated current *1 | | A (rms) | 1.6 | 2.5 | 4.4 | 1 | 1.6 | 2.5 |
| Max. momentary current *1 | | A (rms) | 4.9 | 7.5 | 13.3 | 3.1 | 4.9 | 7.5 |
| Rotor inertia | | kg·m² (GD²/4) | $1.0 \times 10^{-5}$ | $3.5 \times 10^{-5}$ | $6.5 \times 10^{-5}$ | $1.0 \times 10^{-5}$ | $3.5 \times 10^{-5}$ | $6.4 \times 10^{-5}$ |
| Applicable load inertia | | — | 20 times the rotor inertia max.*2 | | | | | |
| Torque constant *1 | | N·m/A | 0.21 | 0.27 | 0.3 | 0.34 | 0.42 | 0.54 |
| Power rate *1 | | kW/s | 10.2 | 11.7 | 26.0 | 10.2 | 11.5 | 25.5 |
| Mechanical time constant | | ms | 0.87 | 0.75 | 0.55 | 1.05 | 0.81 | 0.59 |
| Electrical time constant | | ms | 3.4 | 6.7 | 6.7 | 2.9 | 5.6 | 6.6 |
| Allowable radial load *3 | | N | 68 | 245 | 245 | 68 | 245 | 245 |
| Allowable thrust load *3 | | N | 58 | 98 | 98 | 58 | 98 | 98 |
| Weight | Without brake | kg | Approx. 0.7 | Approx. 1.3 | Approx. 1.8 | Approx. 0.7 | Approx. 1.3 | Approx. 1.8 |
| | With brake | kg | Approx. 0.9 | Approx. 2 | Approx. 2.5 | Approx. 0.9 | Approx. 2 | Approx. 2.5 |
| Radiation shield dimensions (material) | | | 130 × 120 × t10 (Al) | 170 × 160 × t12(Al) | | 130 × 120 × t10 (Al) | 170 × 160 × t12 (Al) | |
| Applicable Servo Drives (R88D-) | | | GN01L-ML2 | GN02L-ML2 | GN04L-ML2 | GN01H-ML2 | GN02H-ML2 | GN04H-ML2 |
| Brake specifications | Brake inertia | kg·m² (GD²/4) | $3 \times 10^{-6}$ | $9 \times 10^{-6}$ | | $3 \times 10^{-6}$ | $9 \times 10^{-6}$ | |
| | Excitation voltage *4 | V | 24 VDC ±10% | | | | | |
| | Power consumption (at 20°C) | W | 7 | 10 | 10 | 7 | 10 | 10 |
| | Current consumption (at 20°C) | A | 0.29 | 0.41 | 0.41 | 0.29 | 0.41 | 0.41 |
| | Static friction torque | N·m | 0.29 min. | 1.27 min. | 1.27 min. | 0.29 min. | 1.27 min. | 1.27 min. |
| | Attraction time *5 | ms | 50 max. | 60 max. | 60 max. | 50 max. | 60 max. | 60 max. |
| | Release time *5 | ms | 15 max. | 15 max. | 15 max. | 15 max. | 15 max. | 15 max. |
| | Backlash | | ±1° | | | | | |
| | Allowable work per braking | J | 137 | 196 | 196 | 137 | 196 | 196 |
| | Allowable total work | J | $44.1 \times 10^3$ | $147 \times 10^3$ | $147 \times 10^3$ | $44.1 \times 10^3$ | $147 \times 10^3$ | $147 \times 10^3$ |
| | Allowable angular acceleration | rad/s² | 10,000 max. (Speed of 900 r/min or more must not be changed in less than 10 ms) | | | | | |
| | Brake life | — | 10,000,000 operations | | | | | |
| | Rating | — | Continuous | | | | | |
| | Insulation grade | — | Type F | | | | | |

*1. These are the values when the Servomotor is combined with a Servo Drive at room temperature (20°C, 65%). The maximum momentary torque shown above indicates the standard value.

*2. Applicable Load Inertia:
- The operable load inertia ratio (load inertia/rotor inertia) depends on the mechanical configuration and its rigidity. For a machine with high rigidity, operation is possible even with high load inertia. Select an appropriate motor and confirm that operation is possible.
- If the dynamic brake is activated frequently with high load inertia, the dynamic brake resistor may burn. Do not repeatedly turn the Servomotor ON and OFF while the dynamic brake is enabled.
- The dynamic brake is designed only for emergency stops. Design the system so that the Servomotor remains stopped for at least 3 minutes after applying the dynamic brake. Otherwise the dynamic brake circuits may fail.

*3. The allowable radial and thrust loads are the values determined for a service life of 20,000 hours at normal operating temperatures. The allowable radial loads are applied as shown in the following diagram.

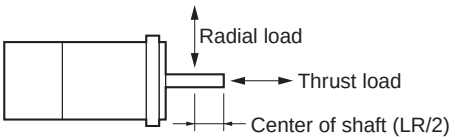


*4. This is an OFF brake. (It is reset when excitation voltage is applied).

*5. The operation time is the value (reference value) measured with a surge suppressor (CR50500 manufactured by Okaya Electric Industries Co., Ltd.).

## Torque and Rotation Speed Characteristics

### 3,000-r/min Flat Servomotors

- **3,000-r/min Servomotors with 100-VAC Power Input**

The following graphs show the characteristics with a 3-m standard cable and a 100-VAC input.

**R88M-GP10030L/S (100 W)**

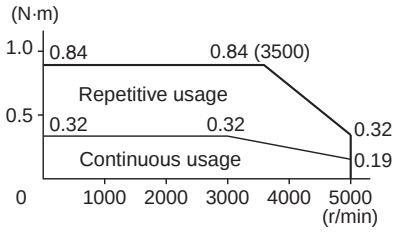


**R88M-GP20030L/S (200 W)**

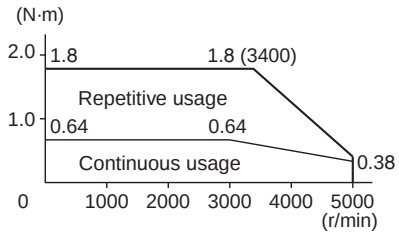


**R88M-GP40030L/S (400 W)**

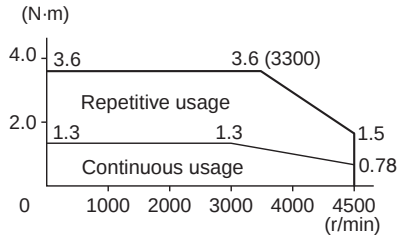


- **3,000-r/min Servomotors with 200-VAC Power Input**

The following graphs show the characteristics with a 3-m standard cable and a 200-VAC input.

**R88M-GP10030H/T (100 W)**

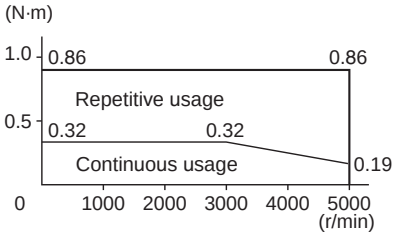


**R88M-GP20030H/T (200 W)**

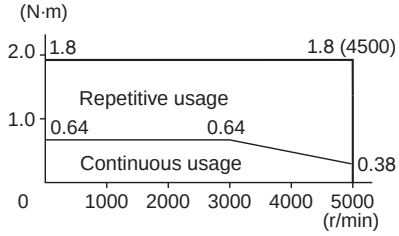


**R88M-GP40030H/T (400 W)**

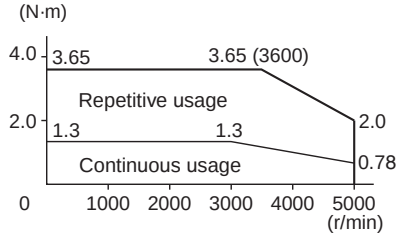

# Servomotor Specifications (R88M-G)

## ● Characteristics

### 2,000-r/min Cylindrical Servomotors

### 200-VAC Input Power

| Item | | Model (R88M-) / Unit | G1K020T | G1K520T | G2K020T | G3K020T | G4K020T | G5K020T | G7K515T |
|---|---|---|---|---|---|---|---|---|---|
| Rated output *1 | | W | 1000 | 1500 | 2000 | 3000 | 4000 | 5000 | 7500 |
| Rated torque *1 | | N·m | 4.8 | 7.15 | 9.54 | 14.3 | 18.8 | 23.8 | 48 |
| Rated rotation speed | | r/min | 2000 | | | | | | 1500 |
| Max. momentary rotation speed | | r/min | 3000 | | | | | | 2000 |
| Max. momentary torque *1 | | N·m | 13.5 | 19.6 | 26.5 | 41.2 | 54.9 | 70.6 | 111 |
| Rated current *1 | | A (rms) | 5.6 | 9.4 | 12.3 | 17.8 | 23.4 | 28 | 46.6 |
| Max. momentary current *1 | | A (rms) | 17.1 | 28.5 | 37.1 | 54.2 | 71.4 | 85.7 | 117.8 |
| Rotor inertia | | kg·m² (GD²/4) | $6.17 \times 10^{-4}$ | $1.12 \times 10^{-3}$ | $1.52 \times 10^{-3}$ | $2.23 \times 10^{-3}$ | $4.25 \times 10^{-3}$ | $6.07 \times 10^{-3}$ | $9.9 \times 10^{-3}$ |
| Applicable load inertia | | — | 10 times the rotor inertia max.*2 | | | | | | |
| Torque constant *1 | | N·m/A | 0.88 | 0.76 | 0.78 | 0.81 | 0.81 | 0.85 | 1.03 |
| Power rate *1 | | kW/s | 37.3 | 45.8 | 60 | 91.6 | 83.2 | 93.5 | 230 |
| Mechanical time constant | | ms | 0.7 | 0.81 | 0.75 | 0.72 | 1 | 0.9 | 0.71 |
| Electrical time constant | | ms | 18 | 19 | 21 | 20 | 24 | 32 | 34 |
| Allowable radial load *3 | | N | 490 | 490 | 490 | 784 | 784 | 784 | 1176 |
| Allowable thrust load *3 | | N | 196 | 196 | 196 | 343 | 343 | 343 | 490 |
| Weight | Without brake | kg | Approx. 6.8 | Approx. 8.5 | Approx. 10.6 | Approx. 14.6 | Approx. 18.8 | Approx. 25 | Approx. 41 |
| | With brake | kg | Approx. 8.7 | Approx. 10.1 | Approx. 12.5 | Approx. 16.5 | Approx. 21.3 | Approx. 28.5 | Approx. 45 |
| Radiation shield dimensions (material) | | | 275 × 260 × t15 (Al) | | | 380 × 350 × t30 (Al) | 470 × 440 × t30 (Al) | | |
| Applicable Servo Drives (R88D-) | | | GN10H-ML2 | GN15H-ML2 | GN20H-ML2 | GN30H-ML2 | GN50H-ML2 | GN50H-ML2 | GN75H-ML2 |
| Brake specifications | Brake inertia | kg·m² (GD²/4) | $1.35 \times 10^{-4}$ | | | | $4.25 \times 10^{-4}$ | $4.7 \times 10^{-4}$ | $4.7 \times 10^{-4}$ |
| | Excitation voltage *4 | V | 24 VDC ±10% | | | | | | |
| | Power consumption(at 20°C) | W | 14 | 19 | 19 | 22 | 26 | 31 | 34 |
| | Current consumption (at 20°C) | A | 0.59 | 0.79 | 0.79 | 0.9 | 1.1 | 1.3 | 1.4 |
| | Static friction torque | N·m | 4.9 min. | 13.7 min. | 13.7 min. | 16.1 min. | 21.5 min. | 24.5 min. | 58.8 min. |
| | Attraction time *5 | ms | 80 max. | 100 max. | 100 max. | 110 max. | 90 max. | 80 max. | 150 max. |
| | Release time *5 | ms | 70 max. | 50 max. | 50 max. | 50 max. | 35 min. | 25 min. | 50 max. |
| | Backlash | | ±1° | | | | | | |
| | Allowable work per braking | J | 588 | 1176 | 1176 | 1170 | 1078 | 1372 | 1372 |
| | Allowable total work | J | $7.8 \times 10^5$ | $1.5 \times 10^6$ | $1.5 \times 10^6$ | $2.2 \times 10^6$ | $2.5 \times 10^6$ | $2.9 \times 10^6$ | $2.9 \times 10^6$ |
| | Allowable angular acceleration | rad/s² | 10,000 max. (Speed of 900 r/min or more must not be changed in less than 10 ms) | | | | | | |
| | Brake life | — | 10,000,000 operations | | | | | | |
| | Rating | — | Continuous | | | | | | |
| | Insulation grade | — | Type F | | | | | | |

*1. These are the values when the Servomotor is combined with a Servo Drive at room temperature (20°C, 65%). The maximum momentary torque shown above indicates the standard value.

*2. Applicable Load Inertia:
- The operable load inertia ratio (load inertia/rotor inertia) depends on the mechanical configuration and its rigidity. For a machine with high rigidity, operation is possible even with high load inertia. Select an appropriate motor and confirm that operation is possible.
- If the dynamic brake is activated frequently with high load inertia, the dynamic brake resistor may burn. Do not repeatedly turn the Servomotor ON and OFF while the dynamic brake is enabled.
- The dynamic brake is designed only for emergency stops. Design the system so that the Servomotor remains stopped for at least 3 minutes after applying the dynamic brake. Otherwise the dynamic brake circuits may fail.

*3. The allowable radial and thrust loads are the values determined for a service life of 20,000 hours at normal operating temperatures. The allowable radial loads are applied as shown in the following diagram.

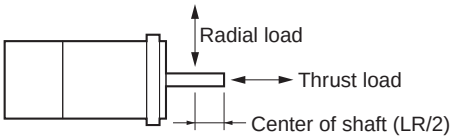


*4. This is an OFF brake. (It is reset when excitation voltage is applied).

*5. The operation time is the value (reference value) measured with a surge suppressor (CR50500 manufactured by Okaya Electric Industries Co., Ltd.).

## Torque and Rotation Speed Characteristics

### 2,000-r/min Cylindrical Servomotors

- **2,000-r/min Servomotors with 200-VAC Power Input**

The following graphs show the characteristics with a 3-m standard cable and a 200-VAC input.

**R88M-G1K020T (1 kW)**

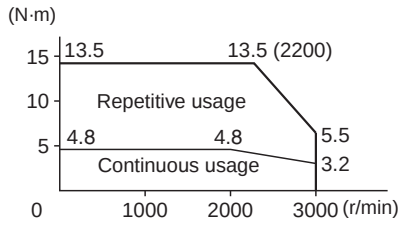


**R88M-G1K520T (1.5 kW)**

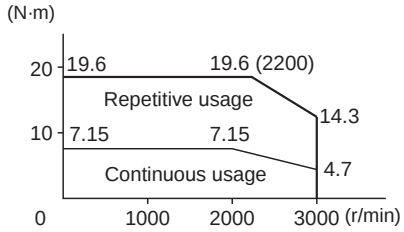


**R88M-G2K020T (2 kW)**

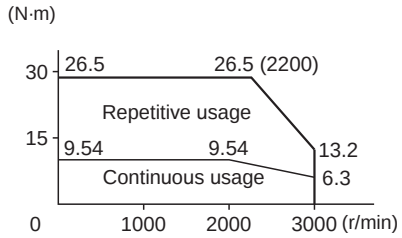


**R88M-G3K020T (3 kW)**

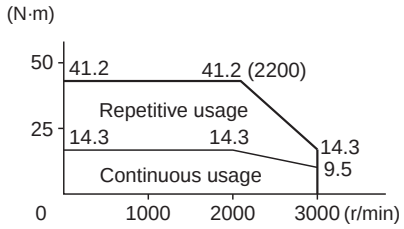


**R88M-G4K020T (4 kW)**

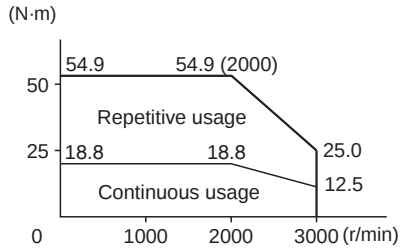


**R88M-G5K020T (5 kW)**

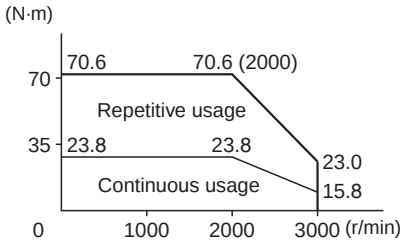


**R88M-G7K515T (7.5 kW)**

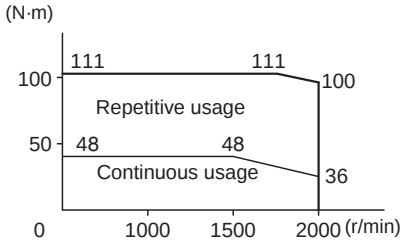

# Servomotor Specifications (R88M-G)

## ● Characteristics

### 1,000-r/min Cylindrical Servomotors
### 200-VAC Input Power

| Item | | Model (R88M-) / Unit | G90010T | G2K010T | G3K010T | G4K510T | G6K010T |
|---|---|---|---|---|---|---|---|
| Rated output *1 | | W | 900 | 2000 | 3000 | 4500 | 6000 |
| Rated torque *1 | | N·m | 8.62 | 19.1 | 28.4 | 42.9 | 57.2 |
| Rated rotation speed | | r/min | 1000 | | | | |
| Max. momentary rotation speed | | r/min | 2000 | | | | |
| Max. momentary torque *1 | | N·m | 18.4 | 41.5 | 60 | 101 | 130 |
| Rated current *1 | | A (rms) | 7.6 | 18.5 | 24 | 33 | 57.2 |
| Max. momentary current *1 | | A (rms) | 17.1 | 44 | 57.1 | 84.2 | 121.4 |
| Rotor inertia | | kg·m² (GD²/4) | $1.12 \times 10^{-3}$ | $3.55 \times 10^{-3}$ | $5.57 \times 10^{-3}$ | $8.09 \times 10^{-3}$ | $9.9 \times 10^{-3}$ |
| Applicable load inertia | | — | 10 times the rotor inertia max.*2 | | | | |
| Torque constant *1 | | N·m/A | 1.13 | 1 | 1.1 | 1.3 | 1.22 |
| Power rate *1 | | kW/s | 66.3 | 103 | 145 | 228 | 331 |
| Mechanical time constant | | ms | 0.88 | 0.97 | 0.74 | 0.7 | 0.65 |
| Electrical time constant | | ms | 20 | 25 | 30 | 31 | 46.2 |
| Allowable radial load *3 | | N | 686 | 1176 | 1470 | 1470 | 1764 |
| Allowable thrust load *3 | | N | 196 | 490 | 490 | 490 | 588 |
| Weight | Without brake | kg | Approx. 8.5 | Approx. 17.5 | Approx. 25 | Approx. 34 | Approx. 41 |
| | With brake | kg | Approx. 10 | Approx. 21 | Approx. 28.5 | Approx. 39.5 | Approx. 45 |
| Radiation shield dimensions (material) | | | 275 × 260 × t15 (Al) | 470 × 440 × t30 (Al) | | | |
| Applicable Servo Drives (R88D-) | | | GN15H-ML2 | GN30H-ML2 | GN50H-ML2 | GN50H-ML2 | GN75H-ML2 |
| Brake specifications | Brake inertia | kg·m² (GD²/4) | $1.35 \times 10^{-4}$ | $4.7 \times 10^{-4}$ | | | |
| | Excitation voltage *4 | V | 24 VDC ±10% | | | | |
| | Power consumption (at 20°C) | W | 19 | 31 | 34 | 34 | 34 |
| | Current consumption (at 20°C) | A | 0.79 | 1.3 | 1.4 | 1.4 | 1.4 |
| | Static friction torque | N·m | 13.7 min. | 24.5 min. | 58.8 min. | 58.8 min. | 58.8 min. |
| | Attraction time *5 | ms | 100 max. | 80 max. | 150 max. | 150 max. | 150 max. |
| | Release time *5 | ms | 50 max. | 25 max. | 50 max. | 50 max. | 50 max. |
| | Backlash | | ±1° | | | | |
| | Allowable work per braking | J | 1176 | 1372 | 1372 | 1372 | 1372 |
| | Allowable total work | J | $1.6 \times 10^6$ | $2.9 \times 10^6$ | $2.9 \times 10^6$ | $2.9 \times 10^6$ | $2.9 \times 10^6$ |
| | Allowable angular acceleration | rad/s² | 10,000 max. (Speed of 900 r/min or more must not be changed in less than 10 ms) | | | | |
| | Brake life | — | 10,000,000 operations | | | | |
| | Rating | — | Continuous | | | | |
| | Insulation grade | — | Type F | | | | |

*1. These are the values when the Servomotor is combined with a Servo Drive at room temperature (20°C, 65%). The maximum momentary torque shown above indicates the standard value.

*2. Applicable Load Inertia:
- The operable load inertia ratio (load inertia/rotor inertia) depends on the mechanical configuration and its rigidity. For a machine with high rigidity, operation is possible even with high load inertia. Select an appropriate motor and confirm that operation is possible.
- If the dynamic brake is activated frequently with high load inertia, the dynamic brake resistor may burn. Do not repeatedly turn the Servomotor ON and OFF while the dynamic brake is enabled.
- The dynamic brake is designed only for emergency stops. Design the system so that the Servomotor remains stopped for at least 3 minutes after applying the dynamic brake. Otherwise the dynamic brake circuits may fail.

*3. The allowable radial and thrust loads are the values determined for a service life of 20,000 hours at normal operating temperatures. The allowable radial loads are applied as shown in the following diagram.

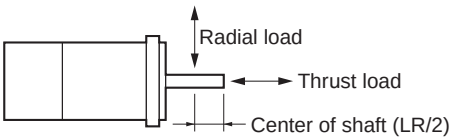


*4. This is an OFF brake. (It is reset when excitation voltage is applied).

*5. The operation time is the value (reference value) measured with a surge suppressor (CR50500 manufactured by Okaya Electric Industries Co., Ltd.).

## Torque and Rotation Speed Characteristics

### 1,000-r/min Cylindrical Servomotors

- **1,000-r/min Servomotors with 200-VAC Power Input**

The following graphs show the characteristics with a 3-m standard cable and a 200-VAC input.

**R88M-G90010T (900 W)**

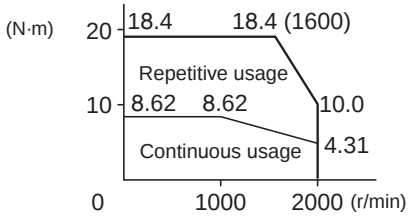


**R88M-G2K010T (2 kW)**

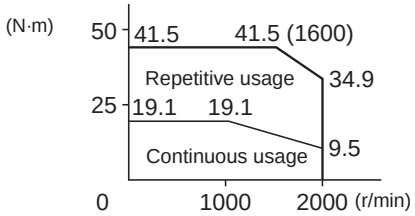


**R88M-G3K010T (3 kW)**

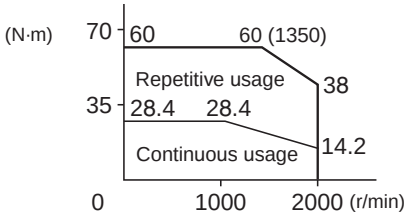


**R88M-G4K510 (4.5 kW)**

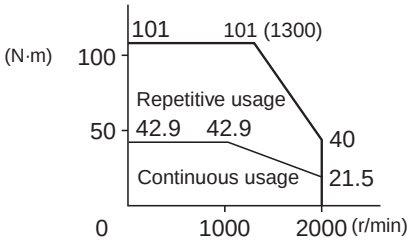


**R88M-G6K010T (6 kW)**

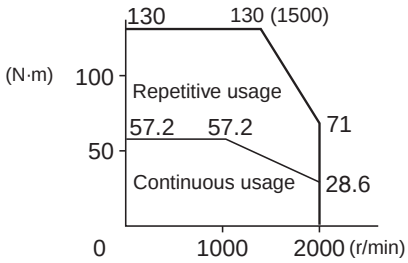

## Decelerator Specifications (R88G-HPG/VRSF)

● **Backlash: 3 Arcminutes Max.**

### Decelerators for 3,000-r/min Servomotors

| Model | | | Rated rotation speed | Rated torque | Efficiency | Maximum momentary rotation speed | Maximum momentary torque | Decelerator inertia | Allowable radial load | Allowable thrust load | Weight |
|---|---|---|---|---|---|---|---|---|---|---|---|
| | | | r/min | N·m | % | r/min | N·m | kg·m² | N | N | kg |
| 50 W | 1/5 | R88G-HPG11A05100B | 600 | 0.60 | 75 | 1000 | 1.68 | $5.00 \times 10^{-7}$ | 135 | 538 | 0.29 |
| | 1/9 | R88G-HPG11A09050B | 333 | 1.17 | 81 | 555 | 3.29 | $3.00 \times 10^{-7}$ | 161 | 642 | 0.29 |
| | 1/21 | R88G-HPG14A21100B | 143 | 2.18 | 65 | 238 | 6.13 | $5.00 \times 10^{-6}$ | 340 | 1358 | 1.04 |
| | 1/33 | R88G-HPG14A33050B | 91 | 3.73 | 71 | 151 | 10.5 | $4.40 \times 10^{-6}$ | 389 | 1555 | 1.04 |
| | 1/45 | R88G-HPG14A45050B | 67 | 5.09 | 71 | 111 | 14.3 | $4.40 \times 10^{-6}$ | 427 | 1707 | 1.04 |
| 100 W | 1/5 | R88G-HPG11A05100B | 600 | 1.37 | 86 | 1000 | 3.8 | $5.00 \times 10^{-7}$ | 135 | 538 | 0.29 |
| | 1/11 | R88G-HPG14A11100B | 273 | 2.63 | 75 | 454 | 7.39 | $6.00 \times 10^{-6}$ | 280 | 1119 | 1.04 |
| | 1/21 | R88G-HPG14A21100B | 143 | 5.40 | 80 | 238 | 15.2 | $5.00 \times 10^{-6}$ | 340 | 1358 | 1.04 |
| | 1/33 | R88G-HPG20A33100B | 91 | 6.91 | 65 | 151 | 19.4 | $6.50 \times 10^{-5}$ | 916 | 3226 | 2.4 |
| | 1/45 | R88G-HPG20A45100B | 67 | 9.42 | 65 | 111 | 26.5 | $6.50 \times 10^{-5}$ | 1006 | 3541 | 2.4 |
| 200 W | 1/5 | R88G-HPG14A05200B | 600 | 2.49 | 78 | 1000 | 6.93 | $2.07 \times 10^{-5}$ | 221 | 883 | 1.02 |
| | 1/11 | R88G-HPG14A11200B | 273 | 6.01 | 85 | 454 | 16.7 | $1.93 \times 10^{-5}$ | 280 | 1119 | 1.09 |
| | 1/21 | R88G-HPG20A21200B | 143 | 10.2 | 76 | 238 | 28.5 | $4.90 \times 10^{-5}$ | 800 | 2817 | 2.9 |
| | 1/33 | R88G-HPG20A33200B | 91 | 17.0 | 81 | 151 | 47.4 | $4.50 \times 10^{-5}$ | 916 | 3226 | 2.9 |
| | 1/45 | R88G-HPG20A45200B | 67 | 23.2 | 81 | 111 | 64.6 | $4.50 \times 10^{-5}$ | 1006 | 3541 | 2.9 |
| 400 W | 1/5 | R88G-HPG14A05400B | 600 | 5.66 | 87 | 1000 | 16.0 (15.7) | $2.07 \times 10^{-5}$ | 221 | 883 | 1.09 |
| | 1/11 | R88G-HPG20A11400B | 273 | 11.7 | 82 | 454 | 33.1 (32.5) | $5.70 \times 10^{-5}$ | 659 | 2320 | 2.9 |
| | 1/21 | R88G-HPG20A21400B | 143 | 23.5 | 86 | 238 | 66.5 (65.2) | $4.90 \times 10^{-5}$ | 800 | 2547 | 2.9 |
| | 1/33 | R88G-HPG32A33400B | 91 | 34.7 | 81 | 151 | 98.2 (96.3) | $6.20 \times 10^{-5}$ | 1565 | 6240 | 7.5 |
| | 1/45 | R88G-HPG32A45400B | 67 | 47.4 | 81 | 111 | 133.9 (131.4) | $6.10 \times 10^{-5}$ | 1718 | 6848 | 7.5 |
| 750 W | 1/5 | R88G-HPG20A05750B | 600 | 9.94 | 83 | 1000 | 29.2 | $6.80 \times 10^{-5}$ | 520 | 1832 | 2.9 |
| | 1/11 | R88G-HPG20A11750B | 273 | 23.2 | 88 | 454 | 68.1 | $6.00 \times 10^{-5}$ | 659 | 2320 | 3.1 |
| | 1/21 | R88G-HPG32A21750B | 143 | 42.3 | 84 | 238 | 124.3 | $3.00 \times 10^{-4}$ | 1367 | 5448 | 7.8 |
| | 1/33 | R88G-HPG32A33750B | 91 | 69.7 | 88 | 151 | 204.7 | $2.70 \times 10^{-4}$ | 1565 | 6240 | 7.8 |
| | 1/45 | R88G-HPG32A45750B | 67 | 95.0 | 88 | 111 | 279.2 | $2.70 \times 10^{-4}$ | 1718 | 6848 | 7.8 |
| 1 kW | 1/5 | R88G-HPG32A051K0B | 600 | 11.5 | 72 | 1000 | 32.9 | $3.90 \times 10^{-4}$ | 889 | 3542 | 7.3 |
| | 1/11 | R88G-HPG32A111K0B | 273 | 28.9 | 83 | 454 | 82.6 | $3.40 \times 10^{-4}$ | 1126 | 4488 | 7.8 |
| | 1/21 | R88G-HPG32A211K0B | 143 | 58.1 | 87 | 238 | 166.1 | $3.00 \times 10^{-4}$ | 1367 | 5488 | 7.8 |
| | 1/33 | R88G-HPG32A331K0B | 91 | 94.3 | 90 | 151 | 270.0 | $2.80 \times 10^{-4}$ | 1565 | 6240 | 7.8 |
| | 1/45 | R88G-HPG50A451K0B | 67 | 124.2 | 87 | 100*1 | 355.4 | $4.70 \times 10^{-4}$ | 4538 | 15694 | 19.0 |
| 1.5 kW | 1/5 | R88G-HPG32A052K0B | 600 | 19.1 | 80 | 1000 | 51.3 | $3.90 \times 10^{-4}$ | 889 | 3542 | 7.4 |
| | 1/11 | R88G-HPG32A112K0B | 273 | 45.7 | 87 | 454 | 122.5 | $3.40 \times 10^{-4}$ | 1126 | 4488 | 7.9 |
| | 1/21 | R88G-HPG32A211K5B | 143 | 90.1 | 90 | 238 | 241.9 | $3.00 \times 10^{-4}$ | 1367 | 5448 | 7.9 |
| | 1/33 | R88G-HPG50A332K0B | 91 | 141.5 | 90 | 136*1 | 379.7 | $4.80 \times 10^{-4}$ | 4135 | 14300 | 19.0 |
| | 1/45 | R88G-HPG50A451K5B | 67 | 192.9 | 90 | 100*1 | 517.8 | $4.70 \times 10^{-4}$ | 4538 | 15694 | 19.0 |
| 2 kW | 1/5 | R88G-HPG32A052K0B | 600 | 26.7 | 84 | 1000 | 77.4 | $3.90 \times 10^{-4}$ | 889 | 3542 | 7.4 |
| | 1/11 | R88G-HPG32A112K0B | 273 | 62.4 | 89 | 454 | 180.7 | $3.40 \times 10^{-4}$ | 1126 | 4488 | 7.9 |
| | 1/21 | R88G-HPG50A212K0B | 143 | 118.9 | 89 | 214*1 | 343.9 | $5.80 \times 10^{-4}$ | 3611 | 12486 | 19.0 |
| | 1/33 | R88G-HPG50A332K0B | 91 | 191.8 | 91 | 136*1 | 555.0 | $4.80 \times 10^{-4}$ | 4135 | 14300 | 19.0 |
| 3 kW | 1/5 | R88G-HPG32A053K0B | 600 | 42.0 | 88 | 1000 | 118.9 | $3.80 \times 10^{-4}$ | 889 | 3542 | 7.3 |
| | 1/11 | R88G-HPG50A113K0B | 273 | 92.3 | 88 | 409*1 | 261.4 | $7.70 \times 10^{-4}$ | 2974 | 10285 | 19.0 |
| | 1/21 | R88G-HPG50A213K0B | 143 | 183.0 | 91 | 214*1 | 517.7 | $5.80 \times 10^{-4}$ | 3611 | 12486 | 19.0 |
| 4 kW | 1/5 | R88G-HPG32A054K0B | 600 | 53.9 | 90 | 900*1 | 163.4 | $3.80 \times 10^{-4}$ | 889 | 3542 | 7.9 |
| | 1/11 | R88G-HPG50A115K0B | 273 | 124.6 | 90 | 409*1 | 359.0 | $8.80 \times 10^{-4}$ | 2974 | 10285 | 19.1 |
| 5 kW | 1/5 | R88G-HPG50A055K0B | 600 | 69.3 | 88 | 900*1 | 197.8 | $1.20 \times 10^{-3}$ | 2347 | 8118 | 17.7 |
| | 1/11 | R88G-HPG50A115K0B | 273 | 158.4 | 91 | 409*1 | 451.9 | $8.80 \times 10^{-4}$ | 2974 | 10285 | 19.1 |

*1. Keep the maximum rotation speed at 4,500 r/min or less.

**Note: 1.** The values inside parentheses ( ) are for 100-V Servomotors.
**Note: 2.** The Decelerator inertia is the Servomotor shaft conversion value.
**Note: 3.** The protective structure for Servomotors with Decelerators satisfies IP44.
**Note: 4.** The allowable radial load is the value at the T/2 position.
**Note: 5.** The standard models have a straight shaft. Models with a key and tap are indicated with "J" at the end of the model number (the suffix in the box).

## Decelerators for 3,000-r/min Flat Servomotors

| Model | | | Rated rotation speed | Rated torque | Efficiency | Maximum momentary rotation speed | Maximum momentary torque | Decelerator inertia | Allowable radial load | Allowable thrust load | Weight |
|---|---|---|---|---|---|---|---|---|---|---|---|
| | | | r/min | N·m | % | r/min | N·m | kg·m² | N | N | kg |
| 100 W | 1/5 | R88G-HPG11A05100PB | 600 | 1.37 | 85 | 1000 | 3.67 (3.59) | $5.00 \times 10^{-7}$ | 135 | 538 | 0.34 |
| | 1/11 | R88G-HPG14A11100PB | 273 | 2.63 | 75 | 454 | 7.06 (6.89) | $6.00 \times 10^{-6}$ | 280 | 1119 | 1.04 |
| | 1/21 | R88G-HPG14A21100PB | 143 | 5.40 | 80 | 238 | 14.5 (14.2) | $5.00 \times 10^{-6}$ | 340 | 1358 | 1.04 |
| | 1/33 | R88G-HPG20A33100PB | 91 | 6.91 | 65 | 151 | 18.6 (18.1) | $4.50 \times 10^{-5}$ | 916 | 3226 | 2.9 |
| | 1/45 | R88G-HPG20A45100PB | 67 | 9.42 | 65 | 111 | 25.3 (24.7) | $4.50 \times 10^{-5}$ | 1006 | 3541 | 2.9 |
| 200 W | 1/5 | R88G-HPG14A05200PB | 600 | 2.49 | 78 | 1000 | 7.01 | $2.07 \times 10^{-5}$ | 221 | 883 | 0.99 |
| | 1/11 | R88G-HPG20A11200PB | 273 | 4.75 | 68 | 454 | 13.4 | $5.80 \times 10^{-5}$ | 659 | 2320 | 3.1 |
| | 1/21 | R88G-HPG20A21200PB | 143 | 10.2 | 76 | 238 | 28.8 | $4.90 \times 10^{-5}$ | 800 | 2817 | 3.1 |
| | 1/33 | R88G-HPG20A33200PB | 91 | 17.0 | 81 | 151 | 47.9 | $4.50 \times 10^{-5}$ | 916 | 3226 | 3.1 |
| | 1/45 | R88G-HPG20A45200PB | 67 | 23.2 | 81 | 111 | 65.4 | $4.50 \times 10^{-5}$ | 1006 | 3541 | 3.1 |
| 400 W | 1/5 | R88G-HPG20A05400PB | 600 | 4.67 | 72 | 1000 (900) | 13.1 (12.9) | $7.10 \times 10^{-5}$ | 520 | 1832 | 3.1 |
| | 1/11 | R88G-HPG20A11400PB | 273 | 11.7 | 82 | 454 (409) | 32.9 (32.4) | $5.80 \times 10^{-5}$ | 659 | 2320 | 3.1 |
| | 1/21 | R88G-HPG20A21400PB | 143 | 23.5 | 86 | 238 (214) | 66.2 (65.2) | $4.90 \times 10^{-5}$ | 800 | 2817 | 3.1 |
| | 1/33 | R88G-HPG32A33400PB | 91 | 34.7 | 81 | 151 (136) | 97.6 (96.2) | $2.80 \times 10^{-4}$ | 1565 | 6240 | 7.8 |
| | 1/45 | R88G-HPG32A45400PB | 67 | 47.4 | 81 | 111 (100) | 133.0 (131.2) | $2.80 \times 10^{-4}$ | 1718 | 6848 | 7.8 |

**Note: 1.** The values inside parentheses ( ) are for 100-V Servomotors.
**Note: 2.** The Decelerator inertia is the Servomotor shaft conversion value.
**Note: 3.** The protective structure for Servomotors with Decelerators satisfies IP44.
**Note: 4.** The allowable radial load is the value at the T/2 position.
**Note: 5.** The standard models have a straight shaft. Models with a key and tap are indicated with "J" at the end of the model number (the suffix in the box).

## Decelerators for 2,000-r/min Servomotors

| Model | | | Rated rotation speed | Rated torque | Efficiency | Maximum momentary rotation speed | Maximum momentary torque | Decelerator inertia | Allowable radial load | Allowable thrust load | Weight |
|---|---|---|---|---|---|---|---|---|---|---|---|
| | | | r/min | N·m | % | r/min | N·m | kg·m² | N | N | kg |
| 1 kW | 1/5 | R88G-HPG32A053K0B | 400 | 20.4 | 85 | 600 | 57.4 | $3.80 \times 10^{-4}$ | 889 | 3542 | 7.3 |
| | 1/11 | R88G-HPG32A112K0SB | 182 | 47.3 | 90 | 273 | 133.1 | $3.40 \times 10^{-4}$ | 1126 | 4488 | 7.8 |
| | 1/21 | R88G-HPG32A211K0SB | 95 | 92.3 | 92 | 143 | 259.7 | $2.90 \times 10^{-4}$ | 1367 | 5448 | 7.8 |
| | 1/33 | R88G-HPG50A332K0SB | 60 | 144.9 | 92 | 91 | 407.6 | $4.70 \times 10^{-4}$ | 4135 | 14300 | 19.0 |
| | 1/45 | R88G-HPG50A451K0SB | 44 | 197.7 | 92 | 67 | 555.9 | $4.70 \times 10^{-4}$ | 4538 | 15694 | 19.0 |
| 1.5 kW | 1/5 | R88G-HPG32A053K0B | 400 | 31.7 | 89 | 600 | 86.8 | $3.80 \times 10^{-4}$ | 889 | 3542 | 7.3 |
| | 1/11 | R88G-HPG32A112K0SB | 182 | 72.1 | 92 | 273 | 197.7 | $3.40 \times 10^{-4}$ | 1126 | 4488 | 7.8 |
| | 1/21 | R88G-HPG50A213K0B | 95 | 137.5 | 92 | 143 | 377.0 | $5.80 \times 10^{-4}$ | 3611 | 12486 | 19.0 |
| | 1/33 | R88G-HPG50A332K0SB | 60 | 219.4 | 93 | 91 | 601.5 | $4.70 \times 10^{-4}$ | 4135 | 14300 | 19.0 |
| 2 kW | 1/5 | R88G-HPG32A053K0B | 400 | 43.2 | 91 | 600 | 119.9 | $3.80 \times 10^{-4}$ | 889 | 3542 | 7.3 |
| | 1/11 | R88G-HPG32A112K0SB | 182 | 97.4 | 93 | 273 | 270.5 | $3.40 \times 10^{-4}$ | 1126 | 4488 | 7.8 |
| | 1/21 | R88G-HPG50A213K0B | 95 | 185.6 | 93 | 143 | 515.9 | $5.80 \times 10^{-4}$ | 3611 | 12486 | 19.0 |
| | 1/33 | R88G-HPG50A332K0SB | 60 | 270.0*1 | 93 | 91 | 815.0 | $4.70 \times 10^{-4}$ | 4135 | 14300 | 19.0 |
| 3 kW | 1/5 | R88G-HPG32A054K0B | 400 | 66.0 | 92 | 600 | 190.1 | $3.80 \times 10^{-4}$ | 889 | 3542 | 7.9 |
| | 1/11 | R88G-HPG50A115K0B | 182 | 145.2 | 92 | 273 | 418.3 | $8.80 \times 10^{-4}$ | 2974 | 10285 | 19.1 |
| | 1/21 | R88G-HPG50A213K0SB | 95 | 260.0*1 | 93 | 143 | 806.4 | $6.90 \times 10^{-4}$ | 3611 | 12486 | 19.1 |
| | 1/25 | R88G-HPG65A253K0SB | 80 | 322.9 | 90 | 120 | 930.1 | $3.00 \times 10^{-3}$ | 7846 | 28654 | 52.0 |
| 4 kW | 1/5 | R88G-HPG50A054K0SB | 400 | 85.8 | 91 | 600 | 250.3 | $1.20 \times 10^{-3}$ | 2347 | 8118 | 18.6 |
| | 1/11 | R88G-HPG50A114K0SB | 182 | 192.7 | 93 | 273 | 562.8 | $8.70 \times 10^{-4}$ | 2974 | 10285 | 20.1 |
| | 1/20 | R88G-HPG65A204K0SB | 100 | 342.2 | 91 | 150 | 999.2 | $3.28 \times 10^{-3}$ | 7338 | 26799 | 52.0 |
| | 1/25 | R88G-HPG65A254K0SB | 80 | 430.9 | 92 | 120 | 1258.6 | $3.24 \times 10^{-3}$ | 7846 | 28654 | 52.0 |
| 5 kW | 1/5 | R88G-HPG50A055K0SB | 400 | 109.8 | 92 | 600 | 325.5 | $1.10 \times 10^{-3}$ | 2347 | 8118 | 22.0 |
| | 1/11 | R88G-HPG50A115K0SB | 182 | 200.0*1 | 93 | 273 | 723.8 | $8.40 \times 10^{-4}$ | 2974 | 10285 | 23.5 |
| | 1/20 | R88G-HPG65A205K0SB | 100 | 438.2 | 92 | 150 | 1300.5 | $2.85 \times 10^{-3}$ | 7338 | 26799 | 55.4 |
| | 1/25 | R88G-HPG65A255K0SB | 80 | 550.9 | 93 | 120 | 1634.4 | $2.81 \times 10^{-3}$ | 7846 | 28654 | 55.4 |
| 7.5 kW | 1/5 | R88G-HPG65A057K5SB | 300 | 221.1 | 92 | 400 | 511.2 | $2.07 \times 10^{-2}$ | 4841 | 17681 | 48.0 |
| | 1/12 | R88G-HPG65A127K5SB | 125 | 540.8 | 94 | 166 | 1250.7 | $2.02 \times 10^{-2}$ | 6295 | 22991 | 52.0 |

*1. "Rated torque" indicates the allowable rated torque for the decelerator. Do not exceed this value.

**Note: 1.** The Decelerator inertia is the Servomotor shaft conversion value.
**Note: 2.** The protective structure for Servomotors with Decelerators satisfies IP44.
**Note: 3.** The allowable radial load is the value at the T/2 position.
**Note: 4.** The standard models have a straight shaft. Models with a key and tap are indicated with "J" at the end of the model number (the suffix in the box).

## Decelerators for 1,000-r/min Servomotors

| Model | | | Rated rotation speed | Rated torque | Efficiency | Maximum momentary rotation speed | Maximum momentary torque | Decelerator inertia | Allowable radial load | Allowable thrust load | Weight |
|---|---|---|---|---|---|---|---|---|---|---|---|
| | | | r/min | N·m | % | r/min | N·m | kg·m² | N | N | kg |
| 900 W | 1/5 | R88G-HPG32A05900TB | 200 | 39.9 | 93 | 400 | 85.2 | $3.80 \times 10^{-4}$ | 889 | 3542 | 7.9 |
| | 1/11 | R88G-HPG32A11900TB | 90 | 89.0 | 94 | 182 | 190.1 | $3.40 \times 10^{-4}$ | 1126 | 4488 | 8.4 |
| | 1/21 | R88G-HPG50A21900TB | 47 | 169.8 | 94 | 95 | 362.4 | $7.00 \times 10^{-4}$ | 3611 | 12486 | 19.1 |
| | 1/33 | R88G-HPG50A33900TB | 30 | 268.5 | 94 | 60 | 573.2 | $5.90 \times 10^{-4}$ | 4135 | 14300 | 19.1 |
| 2 kW | 1/5 | R88G-HPG32A052K0TB | 200 | 90.2 | 95 | 400 | 196.1 | $4.90 \times 10^{-4}$ | 889 | 3542 | 8.9 |
| | 1/11 | R88G-HPG50A112K0TB | 90 | 198.4 | 94 | 182 | 430.9 | $8.40 \times 10^{-4}$ | 2974 | 10285 | 20.1 |
| | 1/21 | R88G-HPG50A212K0TB | 47 | 320.0*1 | 95 | 95 | 786.8 | $6.50 \times 10^{-4}$ | 3611 | 12486 | 20.1 |
| | 1/25 | R88G-HPG65A255K0SB | 40 | 446.7 | 94 | 80 | 971.1 | $2.81 \times 10^{-3}$ | 7846 | 28654 | 55.4 |
| 3 kW | 1/5 | R88G-HPG50A055K0SB | 200 | 133.9 | 94 | 400 | 282.9 | $1.10 \times 10^{-3}$ | 2347 | 8118 | 22.0 |
| | 1/11 | R88G-HPG50A115K0SB | 90 | 246.0*1 | 95 | 182 | 684.0 | $8.40 \times 10^{-4}$ | 2974 | 10285 | 23.5 |
| | 1/20 | R88G-HPG65A205K0SB | 50 | 534.7 | 94 | 100 | 1129.2 | $2.85 \times 10^{-3}$ | 7338 | 26799 | 55.4 |
| | 1/25 | R88G-HPG65A255K0SB | 40 | 669.9 | 94 | 80 | 1411.5 | $2.81 \times 10^{-3}$ | 7846 | 28654 | 55.4 |
| 4.5 kW | 1/5 | R88G-HPG50A054K5TB | 200 | 203.5 | 95 | 400 | 479.2 | $1.20 \times 10^{-3}$ | 2347 | 8118 | 22.0 |
| | 1/12 | R88G-HPG65A127K5SB | 83 | 485.6 | 94 | 166 | 1142.9 | $2.02 \times 10^{-2}$ | 6295 | 22991 | 52.0 |
| | 1/20 | R88G-HPG65A204K5TB | 50 | 813.1 | 95 | 100 | 1915.0 | $1.92 \times 10^{-2}$ | 7338 | 26799 | 52.0 |
| 6 kW | 1/5 | R88G-HPG65A057K5SB | 200 | 268.1 | 94 | 400 | 609.7 | $2.07 \times 10^{-2}$ | 4841 | 17681 | 48.0 |
| | 1/12 | R88G-HPG65A127K5SB | 83 | 650.3 | 95 | 166 | 1477.3 | $2.02 \times 10^{-2}$ | 6295 | 22991 | 52.0 |

*1. "Rated torque" indicates the allowable rated torque for the decelerator. Do not exceed this value.

**Note: 1.** The Decelerator inertia is the Servomotor shaft conversion value.
**Note: 2.** The protective structure for Servomotors with Decelerators satisfies IP44.
**Note: 3.** The allowable radial load is the value at the T/2 position.
**Note: 4.** The standard models have a straight shaft. Models with a key and tap are indicated with "J" at the end of the model number (the suffix in the box).

● **Backlash: 15 Arcminutes Max.**

### Decelerators for 3,000-r/min Servomotors

| Model | | | Rated rotation speed | Rated torque | Efficiency | Maximum momentary rotation speed | Maximum momentary torque | Decelerator inertia | Allowable radial load | Allowable thrust load | Weight |
|---|---|---|---|---|---|---|---|---|---|---|---|
| | | | r/min | N·m | % | r/min | N·m | kg·m² | N | N | kg |
| 50 W | 1/5 | R88G-VRSF05B100CJ | 600 | 0.52 | 65 | 1000 | 1.46 | $4.00 \times 10^{-6}$ | 392 | 196 | 0.55 |
| | 1/9 | R88G-VRSF09B100CJ | 333 | 0.93 | 65 | 556 | 2.63 | $3.50 \times 10^{-6}$ | 441 | 220 | 0.55 |
| | 1/15 | R88G-VRSF15B100CJ | 200 | 1.67 | 70 | 333 | 4.73 | $3.50 \times 10^{-6}$ | 588 | 294 | 0.70 |
| | 1/25 | R88G-VRSF25B100CJ | 120 | 2.78 | 70 | 200 | 7.88 | $3.25 \times 10^{-6}$ | 686 | 343 | 0.70 |
| 100 W | 1/5 | R88G-VRSF05B100CJ | 600 | 1.19 | 75 | 1000 | 3.38 | $4.00 \times 10^{-6}$ | 392 | 196 | 0.55 |
| | 1/9 | R88G-VRSF09B100CJ | 333 | 2.29 | 80 | 556 | 6.48 | $3.50 \times 10^{-6}$ | 441 | 220 | 0.55 |
| | 1/15 | R88G-VRSF15B100CJ | 200 | 3.81 | 80 | 333 | 10.8 | $3.50 \times 10^{-6}$ | 588 | 294 | 0.70 |
| | 1/25 | R88G-VRSF25B100CJ | 120 | 6.36 | 80 | 200 | 18.0 | $3.25 \times 10^{-6}$ | 686 | 343 | 0.70 |
| 200 W | 1/5 | R88G-VRSF05B200CJ | 600 | 2.70 | 85 | 1000 | 7.57 | $1.18 \times 10^{-5}$ | 392 | 196 | 0.72 |
| | 1/9 | R88G-VRSF09C200CJ | 333 | 3.77 | 66 | 556 | 10.6 | $2.75 \times 10^{-5}$ | 931 | 465 | 1.70 |
| | 1/15 | R88G-VRSF15C200CJ | 200 | 6.29 | 66 | 333 | 17.6 | $3.00 \times 10^{-5}$ | 1176 | 588 | 2.10 |
| | 1/25 | R88G-VRSF25C200CJ | 120 | 11.1 | 70 | 200 | 31.2 | $2.88 \times 10^{-5}$ | 1323 | 661 | 2.10 |
| 400 W | 1/5 | R88G-VRSF05C400CJ | 600 | 5.40 | 85 | 1000 | 15.6 (15.3) | $3.63 \times 10^{-5}$ | 784 | 392 | 1.70 |
| | 1/9 | R88G-VRSF09C400CJ | 333 | 9.50 | 83 | 556 | 27.4 (26.8) | $2.75 \times 10^{-5}$ | 931 | 465 | 1.70 |
| | 1/15 | R88G-VRSF15C400CJ | 200 | 15.8 | 83 | 333 | 45.7 (44.8) | $3.00 \times 10^{-5}$ | 1176 | 588 | 2.10 |
| | 1/25 | R88G-VRSF25C400CJ | 120 | 26.4 | 83 | 200 | 76.1 (74.7) | $2.88 \times 10^{-5}$ | 1323 | 661 | 2.10 |
| 750 W | 1/5 | R88G-VRSF05C750CJ | 600 | 10.7 | 90 | 1000 | 31.7 | $7.13 \times 10^{-5}$ | 784 | 392 | 2.10 |
| | 1/9 | R88G-VRSF09D750CJ | 333 | 18.2 | 85 | 556 | 53.9 | $6.50 \times 10^{-5}$ | 1176 | 588 | 3.40 |
| | 1/15 | R88G-VRSF15D750CJ | 200 | 30.4 | 85 | 333 | 89.9 | $7.00 \times 10^{-5}$ | 1372 | 686 | 3.80 |
| | 1/25 | R88G-VRSF25D750CJ | 120 | 50.7 | 85 | 200 | 149.8 | $6.80 \times 10^{-5}$ | 1617 | 808 | 3.80 |

**Note: 1.** The values inside parentheses ( ) are for 100-V Servomotors.
**Note: 2.** The Decelerator inertia is the Servomotor shaft conversion value.
**Note: 3.** The protective structure for Servomotors with Decelerators satisfies IP44.
**Note: 4.** The allowable radial load is the value at the T/2 position.
**Note: 5.** The standard models have a straight shaft with a key.

### Decelerators for 3,000-r/min Flat Servomotor

| Model | | | Rated rotation speed | Rated torque | Efficiency | Maximum momentary rotation speed | Maximum momentary torque | Decelerator inertia | Allowable radial load | Allowable thrust load | Weight |
|---|---|---|---|---|---|---|---|---|---|---|---|
| | | | r/min | N·m | % | r/min | N·m | kg·m² | N | N | kg |
| 100 W | 1/5 | R88G-VRSF05B100PCJ | 600 | 1.19 | 75 | 1000 | 3.15 | $4.00 \times 10^{-6}$ | 392 | 196 | 0.72 |
| | 1/9 | R88G-VRSF09B100PCJ | 333 | 2.29 | 80 | 556 | 6.048 | $3.50 \times 10^{-6}$ | 441 | 220 | 0.72 |
| | 1/15 | R88G-VRSF15B100PCJ | 200 | 3.81 | 80 | 333 | 10.08 | $3.50 \times 10^{-6}$ | 588 | 294 | 0.87 |
| | 1/25 | R88G-VRSF25B100PCJ | 120 | 6.36 | 80 | 200 | 16.8 | $3.25 \times 10^{-6}$ | 686 | 343 | 0.87 |
| 200 W | 1/5 | R88G-VRSF05B200PCJ | 600 | 2.70 | 85 | 1000 | 7.65 | $1.18 \times 10^{-5}$ | 392 | 196 | 0.85 |
| | 1/9 | R88G-VRSF09C200PCJ | 333 | 3.77 | 66 | 556 | 10.692 | $2.75 \times 10^{-5}$ | 931 | 465 | 1.80 |
| | 1/15 | R88G-VRSF15C200PCJ | 200 | 6.29 | 66 | 333 | 17.82 | $3.00 \times 10^{-5}$ | 1176 | 588 | 2.20 |
| | 1/25 | R88G-VRSF25C200PCJ | 120 | 11.1 | 70 | 200 | 31.5 | $2.88 \times 10^{-5}$ | 1323 | 661 | 2.20 |
| 400 W | 1/5 | R88G-VRSF05C400PCJ | 600 | 5.40 | 85 | 1000 (900) | 15.5 (15.3) | $3.63 \times 10^{-5}$ | 784 | 392 | 1.80 |
| | 1/9 | R88G-VRSF09C400PCJ | 333 | 9.50 | 83 | 556 (500) | 27.3 (26.9) | $2.75 \times 10^{-5}$ | 931 | 465 | 1.80 |
| | 1/15 | R88G-VRSF15C400PCJ | 200 | 15.8 | 83 | 333 (300) | 45.4 (44.8) | $3.00 \times 10^{-5}$ | 1176 | 588 | 2.20 |
| | 1/25 | R88G-VRSF25C400PCJ | 120 | 26.4 | 83 | 200 (180) | 75.7 (74.7) | $2.88 \times 10^{-5}$ | 1323 | 661 | 2.20 |

**Note: 1.** The values inside parentheses ( ) are for 100-V Servomotors.
**Note: 2.** The Decelerator inertia is the Servomotor shaft conversion value.
**Note: 3.** The protective structure for Servomotors with Decelerators satisfies IP44.
**Note: 4.** The allowable radial load is the value at the T/2 position.
**Note: 5.** The standard models have a straight shaft with a key.

# Encoder, External Regeneration Resistors, Reactor and Parameter Unit Specifications

## ● Encoder Specifications

### Incremental Encoders

| Item | Specifications |
|---|---|
| **Encoder system** | Optical encoder |
| **No. of output pulses** | Phases A and B: 2,500 pulses/rotation, Phase Z: 1 pulse/rotation |
| **Power supply voltage** | 5 VDC ±5% |
| **Power supply current** | 180 mA (max.) |
| **Output signals** | +S, –S |
| **Output interface** | RS-485 compliance |

### Absolute Encoders

| Item | Specifications |
|---|---|
| **Encoder system** | Optical encoder |
| | 17 bits |
| **No. of output pulses** | Phases A and B: 32,768 pulses/rotation, Phase Z: 1 pulse/rotation |
| **Maximum rotations** | –32,768 to +32,767 rotations |
| **Power supply voltage** | 5 VDC ±5% |
| **Power supply current** | 110 mA (max.) |
| **Applicable battery voltage** | 3.6 VDC |
| **Current consumption of battery** | 180 µA for a maximum of 5 s right after power interruption<br>100 µA for operation during power interruption<br>3.6 µA when power is supplied to Servo Drive |
| **Output signals** | +S, –S |
| **Output interface** | RS-485 compliance |

## ● External Regeneration Resistors Specifications

| Model | Resistance | Nominal capacity | Regeneration absorption for 120°C temperature rise | Heat radiation condition | Thermal switch output specifications |
|---|---|---|---|---|---|
| **R88A-RR08050S** | 50 Ω | 80 W | 20 W | Aluminum 250 × 250, Thickness: 3.0 | Operating temperature: 150°C±5%, NC contact, Rated output: 30 VDC, 50 mA max. |
| **R88A-RR080100S** | 100 Ω | | | | |
| **R88A-RR22047S1** | 47 Ω | 220 W | 70 W | Aluminum 350 × 350, Thickness: 3.0 | Operating temperature: 170°C±5%, NC contact, Rated output: 250 VAC, 0.2 A max. |
| **R88A-RR50020S** | 20 Ω | 500 W | 180 W | Aluminum 600 × 600, Thickness: 3.0 | Operating temperature: 200°C±7%, NC contact, Rated output: 250 VAC, 0.2 A max.<br>24 VDC, 0.2 A max. |

## ● Reactor Specifications

| Servo Drive | Reactor | | | | Reactor type |
|---|---|---|---|---|---|
| | Model | Rated current | Inductance | Weight | |
| R88D-GNA5L-ML2<br>R88D-GN01H-ML2 | 3G3AX-DL2002 | 1.6 A | 21.4 mH | Approx. 0.8 kg | Single-phase |
| R88D-GN01L-ML2<br>R88D-GN02H-ML2 | 3G3AX-DL2004 | 3.2 A | 10.7 mH | Approx. 1.0 kg | Single-phase |
| R88D-GN02L-ML2<br>R88D-GN04H-ML2 | 3G3AX-DL2007 | 6.1 A | 6.75 mH | Approx. 1.3 kg | Single-phase |
| R88D-GN04L-ML2<br>R88D-GN08H-ML2<br>R88D-GN10H-ML2 | 3G3AX-DL2015 | 9.3 A | 3.51 mH | Approx. 1.6 kg | Single-phase |
| R88D-GN15H-ML2 | 3G3AX-DL2022 | 13.8 A | 2.51 mH | Approx. 2.1 kg | Single-phase |
| R88D-GN08H-ML2<br>R88D-GN10H-ML2<br>R88D-GN15H-ML2 | 3G3AX-AL2025 | 10.0 A | 2.8 mH | Approx. 2.8 kg | Three-phase |
| R88D-GN20H-ML2<br>R88D-GN30H-ML2 | 3G3AX-AL2055 | 20.0 A | 0.88 mH | Approx. 4.0 kg | Three-phase |
| R88D-GN50H-ML2 | 3G3AX-AL2110 | 34.0 A | 0.35 mH | Approx. 5.0 kg | Three-phase |
| R88D-GN75H-ML2 | 3G3AX-AL2220 | 67.0 A | 0.18 mH | Approx. 10.0 kg | Three-phase |

## ● R88A-PR02G Parameter Unit Specifications

### General Specifications

| Item | Specifications |
|---|---|
| **Operating ambient temperature**<br>**Operating ambient humidity** | 0 to 55°C<br>90% max. (with no condensation) |
| **Storage ambient temperature**<br>**Storage ambient humidity** | –20 to 80°C<br>90% max. (with no condensation) |
| **Storage and operating atmosphere** | No corrosive gases |
| **Vibration resistance** | 5.9 m/s² max. |

### Performance Specifications

| Item | | Specifications |
|---|---|---|
| **Type** | | Hand-held |
| **Cable length** | | 1.5 m |
| **Connectors** | | Mini DIN 8-pin MD connector |
| **Display** | | 7-segment LED |
| **External dimensions** | | 62 × 114 × 15 mm (W × H × D) |
| **Weight** | | Approx. 0.1 kg (including cable that is provided) |
| **Communications specifications** | **Standard** | RS-232 |
| | **Communications method** | Asynchronous (ASYNC) |
| | **Baud rate** | 9,600 bps |
| | **Start bits** | 1 bit |
| | **Data** | 8 bits |
| | **Parity** | None |
| | **Stop bits** | 1 bit |

# Connections

## ● Control I/O Connector Specifications (CN1)

### Control I/O Signal Connections and External Signal Processing

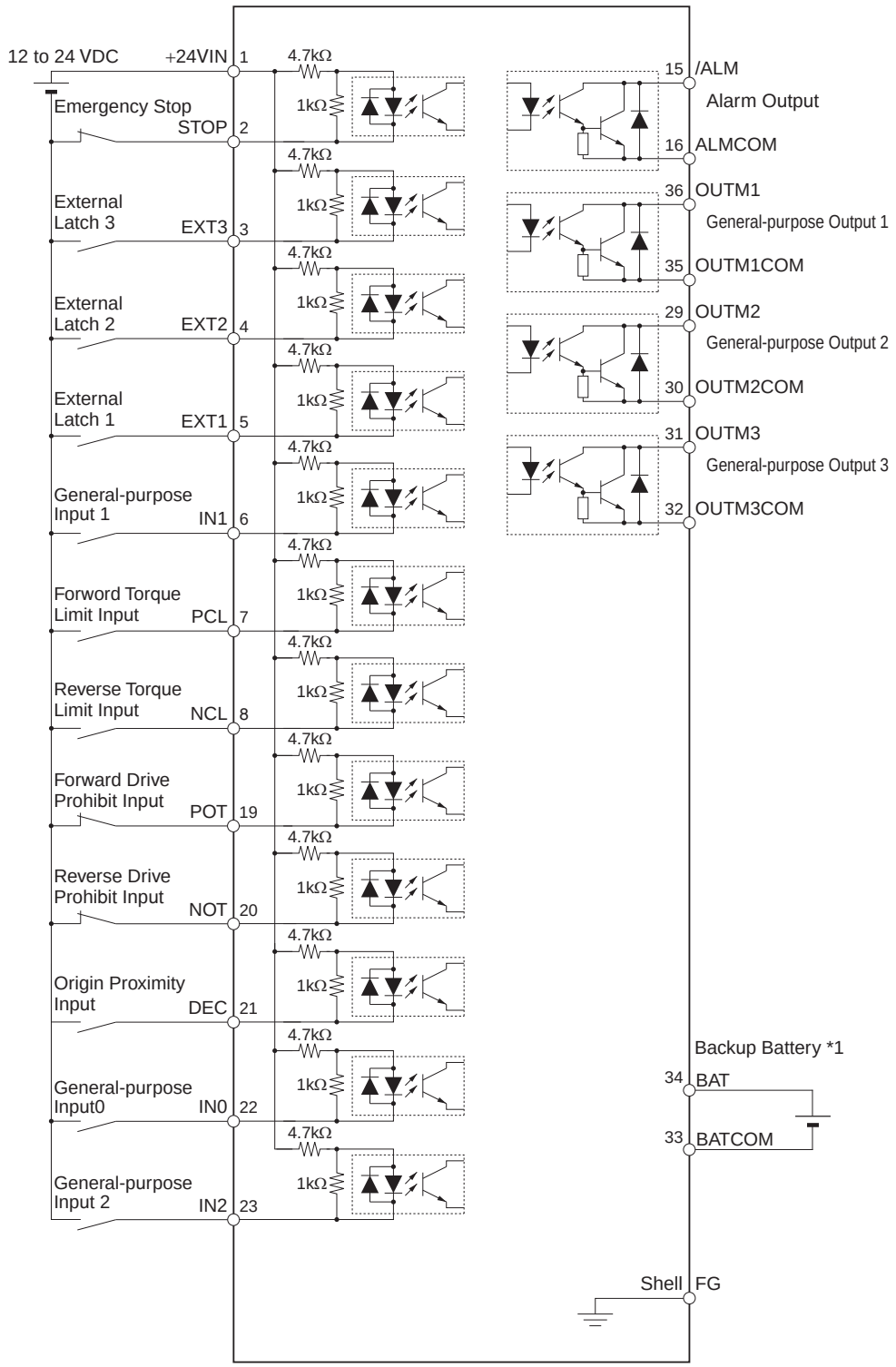


*1. If a backup battery is connected, a cable with a battery is not required.
*2. Inputs for pins 19 and 20 are determined by parameter settings. The diagram shows the default configuration.

## ● Peripheral Device Connection Examples

**R88D-GNA5L-ML2/-GN01L-ML2/-GN02L-ML2/-GN04L-ML2**

**R88D-GN01H-ML2/-GN02H-ML2/-GN04H-ML2/-GN08H-ML2/-GN10H-ML2/-GN15H-ML2**

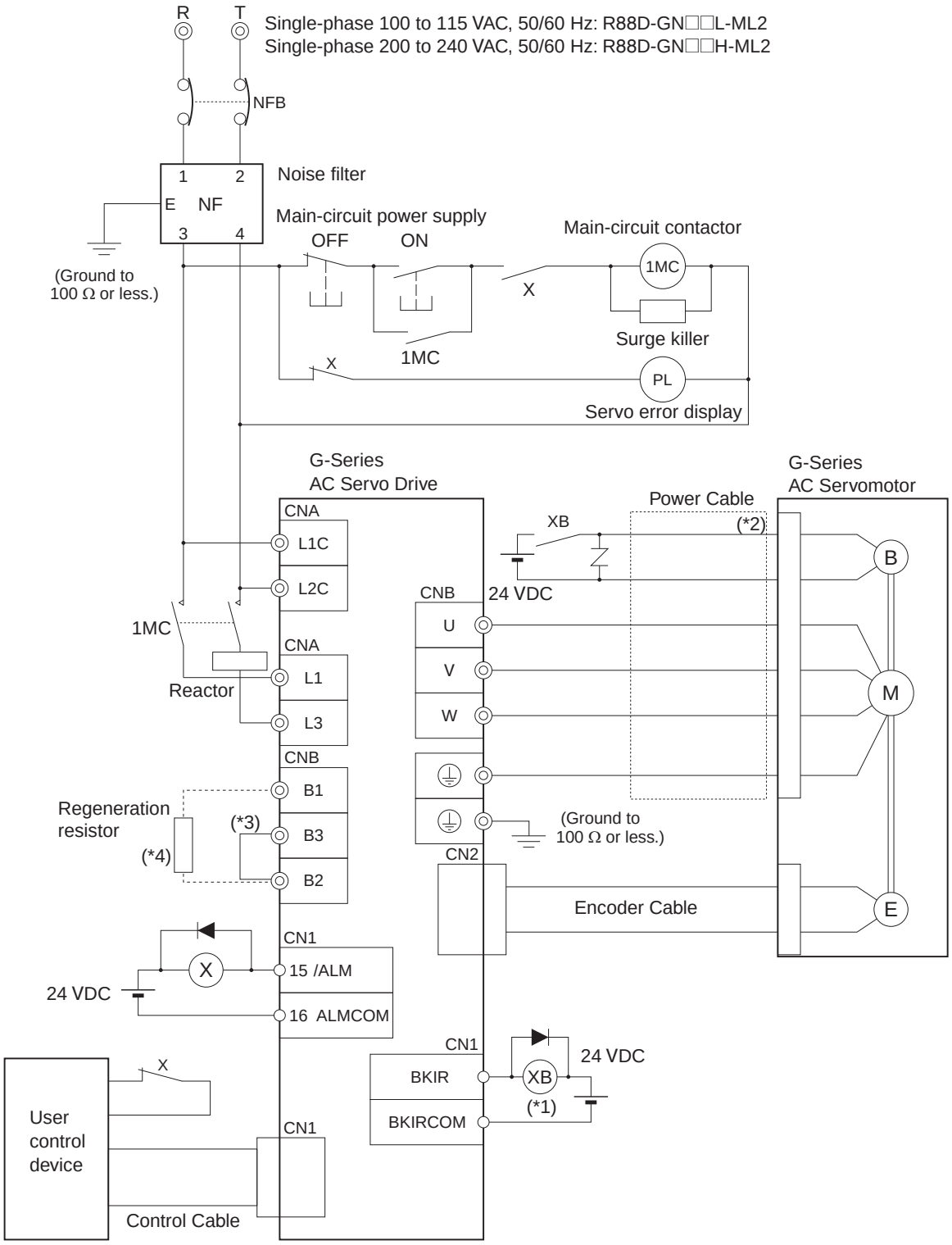


*1. Recommended relay: MY Relay (24 V), by OMRON. For example, the MY2 Relay's rated inductive load is 2 A at 24 VDC and applicable to all G-Series Servomotors with brakes.
*2. The brake is not affected by the polarity of the power supply.
*3. Connect B2-B3 for the models with a built-in regeneration resistor (GN04L-ML2, GN08H-ML2, GN10H-ML2, and GN15H-ML2).
If the amount of regeneration is large, disconnect B2-B3 and connect an External Regeneration Resistor to B1-B2.
*4. The models GNA5L-ML2 to GN02L-ML2 and GN01H-ML2 to GN04H-ML2 do not have a built-in regeneration resistor.
If the amount of regeneration is large, an External Regeneration Resistor must be connected to B1-B2.

**R88D-GN08H-ML2/-GN10H-ML2/-GN15H-ML2**

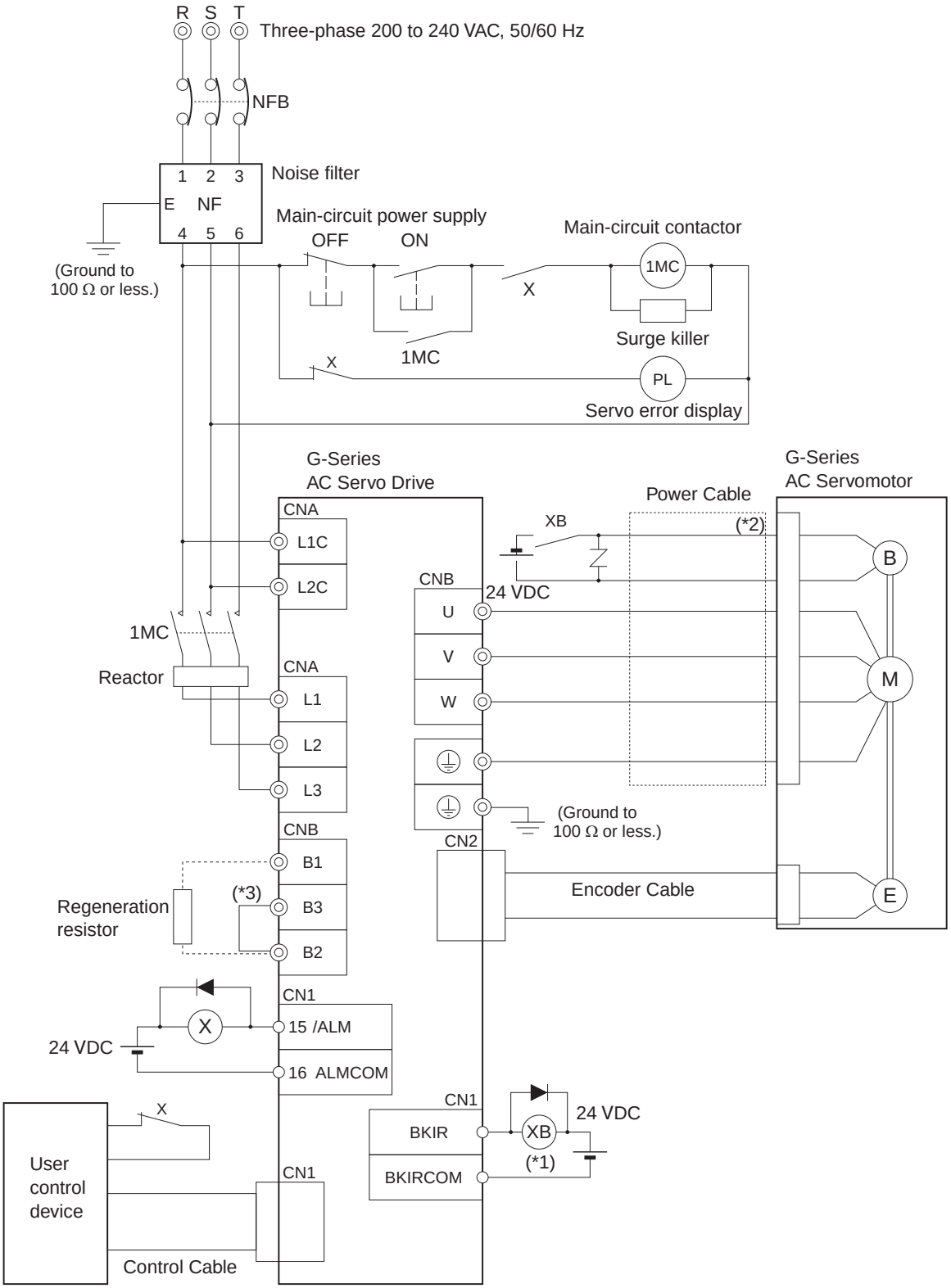


*1. Recommended relay: MY Relay (24 V), by OMRON. For example, the MY2 Relay's rated inductive load is 2 A at 24 VDC and applicable to all G-Series Servomotors with brakes.
*2. The brake is not affected by the polarity of the power supply.
*3. Connect B2-B3 for the models with a built-in regeneration resistor (GN08H-ML2 to GN15H-ML2).
If the amount of regeneration is large, disconnect B2-B3 and connect an External Regeneration Resistor to B1-B2.
*4. Connect B2-B3 for the models with a built-in regeneration resistor (GN08H-ML2 to GN15H-ML2).
If the amount of regeneration is large, disconnect B2-B3 and connect an External Regeneration Resistor to B1-B2.

**R88D-GN20H-ML2/-GN30H-ML2/-GN50H-ML2**

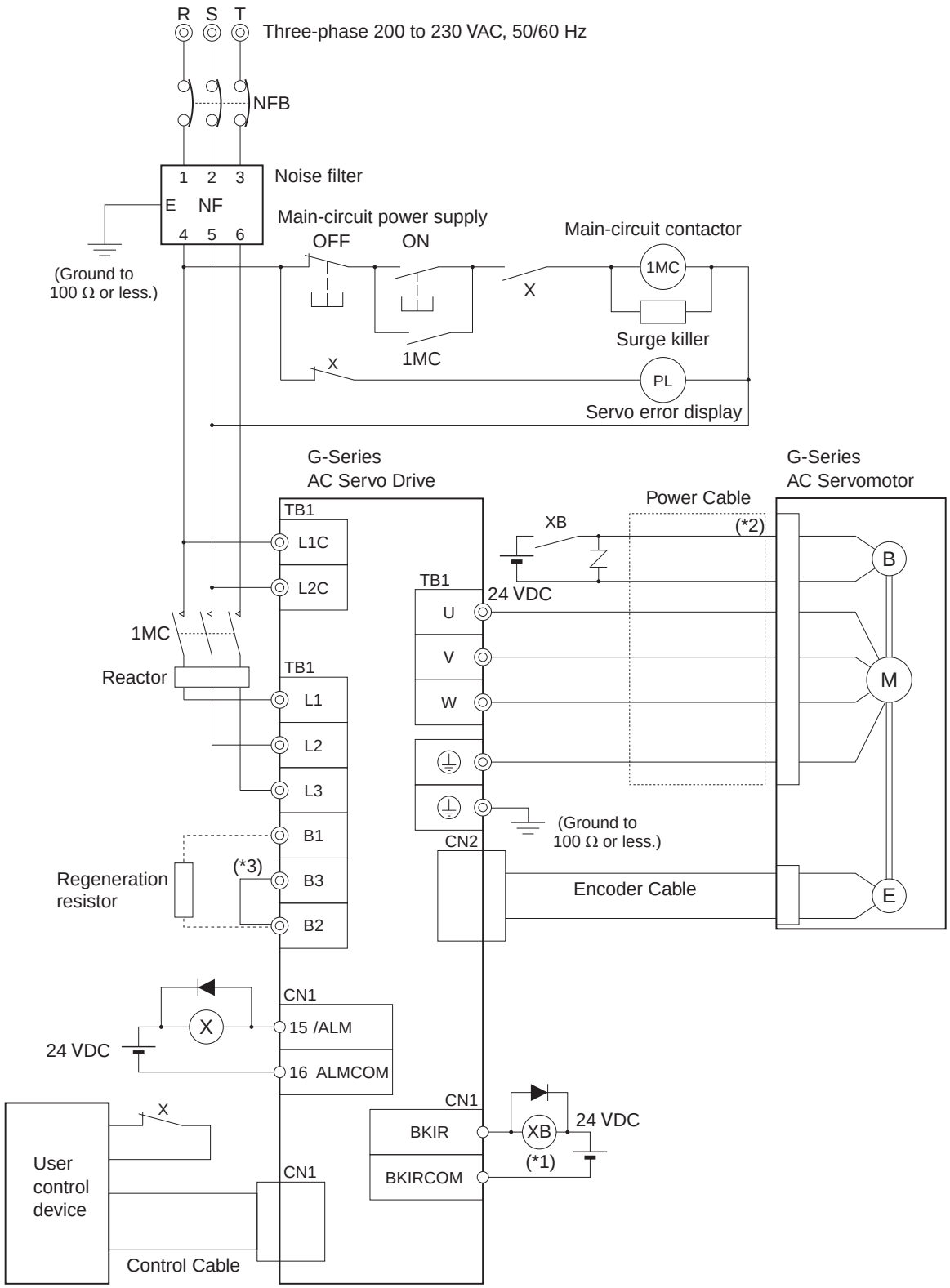


*1. Recommended relay: MY Relay (24 V), by OMRON. For example, the MY2 Relay's rated inductive load is 2 A at 24 VDC and applicable to all G-Series Servomotors with brakes.
*2. The brake is not affected by the polarity of the power supply.
*3. Connect B2-B3 for the models with a built-in regeneration resistor (GN08H-ML2 to GN15H-ML2).
If the amount of regeneration is large, disconnect B2-B3 and connect an External Regeneration Resistor to B1-B2.

**R88D-GN75H-ML2**

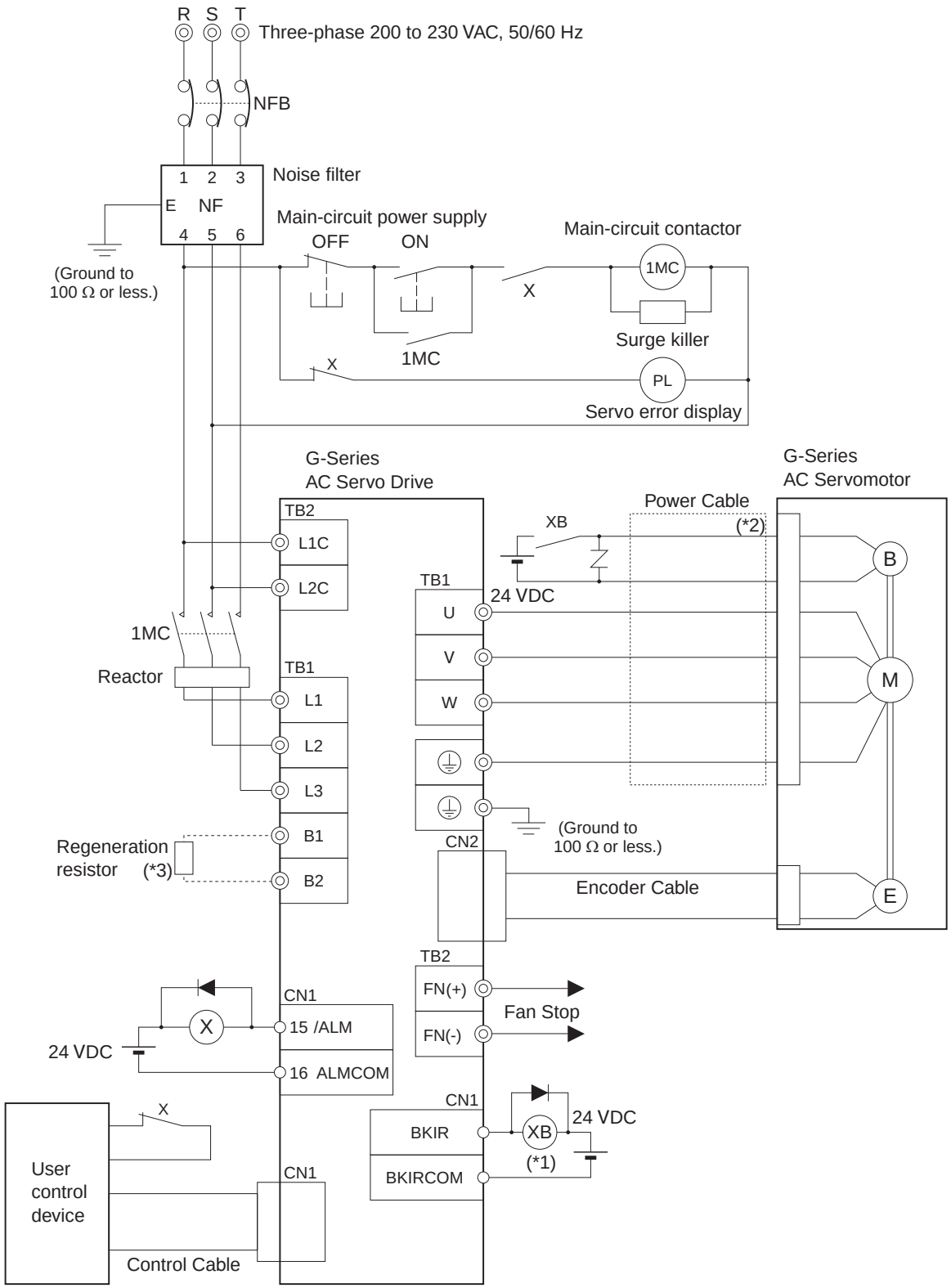


*1. Recommended relay: MY Relay (24 V), by OMRON. For example, the MY2 Relay's rated inductive load is 2 A at 24 VDC and applicable to all G-Series Servomotors with brakes.
*2. The brake is not affected by the polarity of the power supply.
*3. The model GN75H-ML2 does not have a built-in regeneration resistor.
If the amount of regeneration is large, an External Regeneration Resistor must be connected to B1-B2.

# I/O Circuit Diagrams

## Control Input Circuits

### • Control Inputs

For the relay contact, use either a switch, or a transistor with an open-collector output.

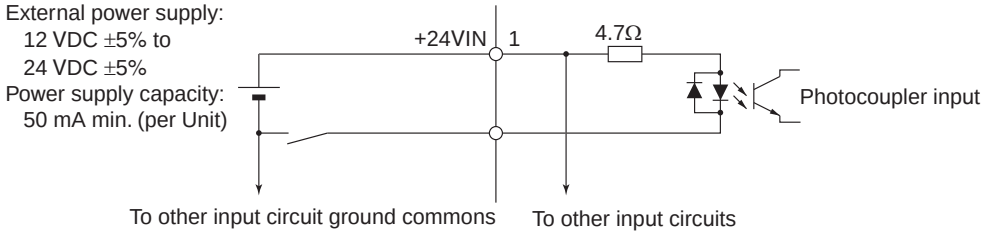


Signal Levels ON level: 10 V min.
OFF level: 3 V max.

## Control Output Circuits

### • Control Outputs

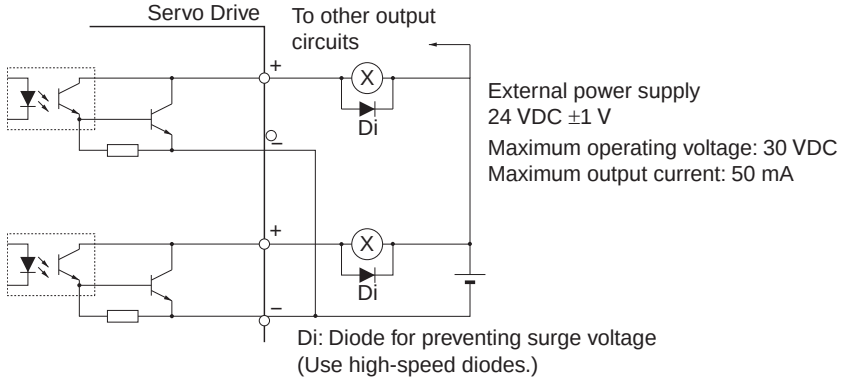

# Components and Functions

## Servo Drive Part Names

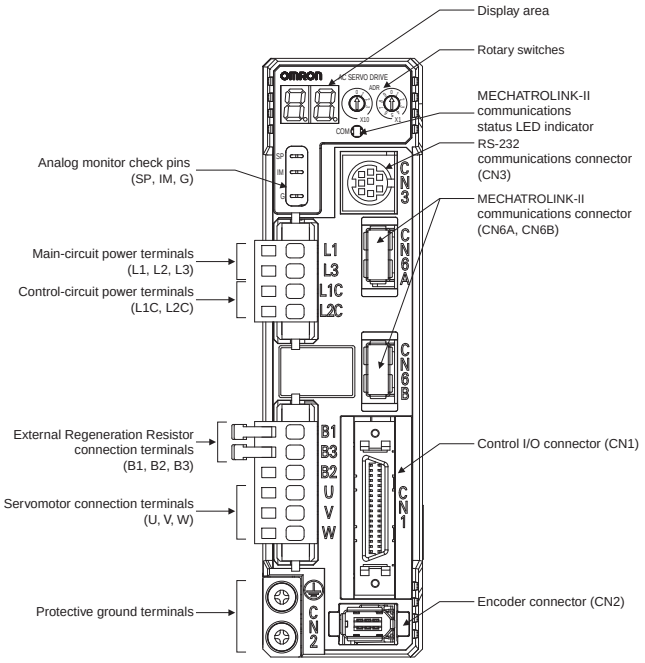


## R88D-GNA5L-ML2/-GN01L-ML2/-GN02L-ML2 R88D-GN04L-ML2/-GN01H-ML2/-GN02H-ML2 R88D-GN04H-ML2/-GN08H-ML2/-GN10H-ML2 R88D-GN15H-ML2

### • Main Circuit Connector (CNA)

| Symbol | Name |
|---|---|
| L1 | Main circuits power supply input |
| L2 | |
| L3 | |
| L1C | Control circuit power supply input |
| L2C | |

### • Servomotor Connector (CNB)

| Symbol | Name |
|---|---|
| B1 | External Regeneration Resistor connection terminals |
| B2 | |
| B3 | |
| U | Servomotor connection terminals |
| V | |
| W | |
| ⏚ | |
| ⏚ | Frame ground |

## R88D-GN20H-ML2/-GN30H-ML2/-GN50H-ML2

### • Main Circuit Terminal Block Specifications

| Symbol | Name |
|---|---|
| L1 | Main circuit power supply input |
| L2 | |
| L3 | |
| L1C | Control circuit power supply input |
| L2C | |
| B1 | External Regeneration Resistor connection terminals |
| B2 | |
| B3 | |
| U | Servomotor connection terminals |
| V | |
| W | |
| ⏚ | |
| ⏚ | Frame ground |

## R88D-GN75H-ML2

### • Main Circuit Terminal Block Specifications (TB1)

| Symbol | Name |
|---|---|
| L1 | Main circuit power supply input |
| L2 | |
| L3 | |
| B1 | External Regeneration Resistor connection terminals |
| B2 | |
| U | Servomotor connection terminals |
| V | |
| W | |
| ⏚ | |
| ⏚ | Frame ground |

### • Main Circuit Terminal Block Specifications (TB2)

| Symbol | Name |
|---|---|
| L1C | Control circuit power supply input |
| L2C | |
| ⏚ | Frame ground |
| FN (+) | Fan Stop Output |
| FN (–) | |

## Display Area

A 2-digit 7-segment LED display shows the Servo Drive status, alarm codes, parameters, and other information.

## Analog Monitor Check Pins (SP, IM, and G)

The actual motor speed, command speed, torque, and number of accumulated pulses can be measured based on the analog voltage level by using an oscilloscope.
Set the type of signal to be output and the output voltage level by setting the Speed Monitor (SP) Selection (Pn007) and Torque Monitor (IM) Selection (Pn008).

## MECHATROLINK-II Status LED Indicator

Indicates the communications status of the MECHATROLINK-II.

## Rotary Switches

Sets the node address.

## ● CN1 Control Input Signals

| Pin No. | Symbol | Name |
|---|---|---|
| 1 | +24VIN | 12 to 24-VDC Power Supply Input |
| 2 | STOP | Emergency Stop Input |
| 3 | EXT3 | External Latch Signal 3 |
| 4 | EXT2 | External Latch Signal 2 |
| 5 | EXT1 | External Latch Signal 1 |
| 6 | IN1 | External general-purpose Input 1 |
| 7 | PCL | Forward Torque Limit Input |
| 8 | NCL | Reverse Torque Limit Input |
| 19 to 20* | POT | Forward Drive Prohibit Input |
| | NOT | Reverse Drive Prohibit Input |
| 21 | DEC | Origin Proximity Input |
| 22 | IN0 | External general-purpose Input 0 |
| 23 | IN2 | External general-purpose Input 2 |
| 34 | BAT | Backup Battery Input ABS |
| 33 | BATCOM | |

*Forward and reverse rotation over travel input.

## ● CN1 Control Output Signals

| Pin No. | Symbol | Name |
|---|---|---|
| 15 | /ALM | Alarm Output |
| 16 | ALMCOM | |
| 29 | OUTM2 | General-purpose Output 2 (READY) |
| 30 | OUTM2COM | |
| 31 | OUTM3 | General-purpose Output 3 (CLIM) |
| 32 | OUTM3COM | |
| 36 | OUTM1 | General-purpose Output 1 (BKIR) |
| 35 | OUTM1COM | |

## ● Encoder Connector Specifications (CN2)

| Pin No. | Symbol | Name |
|---|---|---|
| 1 | E5V | Encoder power supply +5 V |
| 2 | E0V | Encoder power supply GND |
| 3 | BAT+ | Battery + |
| 4 | BAT– | Battery – |
| 5 | PS+ | Encoder +phase S Input |
| 6 | PS– | Encoder –phase S Input |
| Shell | FG | Shield ground |

## ● Parameter Unit Connector Specifications (CN3)

| Pin No. | Symbol | Name |
|---|---|---|
| 3 | TXD | RS-232 send data |
| 4 | GND | Ground |
| 5 | RXD | RS-232 receive data |

## ● Protective Functions

| Error detection | |
|---|---|
| Control power supply undervoltage | |
| Overvoltage | |
| Undervoltage | |
| Overcurrent | |
| Overheating | |
| Overload | |
| Regeneration overload | |
| Encoder communications error | |
| Encoder communications data error | |
| Deviation counter overflow | |
| Overspeed | |
| Command error | |
| Internal deviation counter overflow | |
| Overrun limit error | |
| Parameter error | |
| Parameter corruption | |
| Drive prohibit input error | |
| Absolute encoder system down error | ABS |
| Absolute encoder counter overflow error | ABS |
| Absolute encoder overspeed error | ABS |
| Absolute encoder one-turn counter error | ABS |
| Absolute encoder multi-turn counter error | ABS |
| Absolute encoder status error | ABS |
| Encoder phase Z error | |
| Encoder PS signal error | |
| Node address setting error | |
| Communications error | |
| Transmission cycle error | |
| Watchdog data error | |
| Emergency stop input error | |
| Transmission cycle setting error | |
| SYNC command error | |
| Parameter setting error | |
| Servomotor non-conformity | |

# Parameter

## ● R88A-RP02G : Parameter Unit Part Names

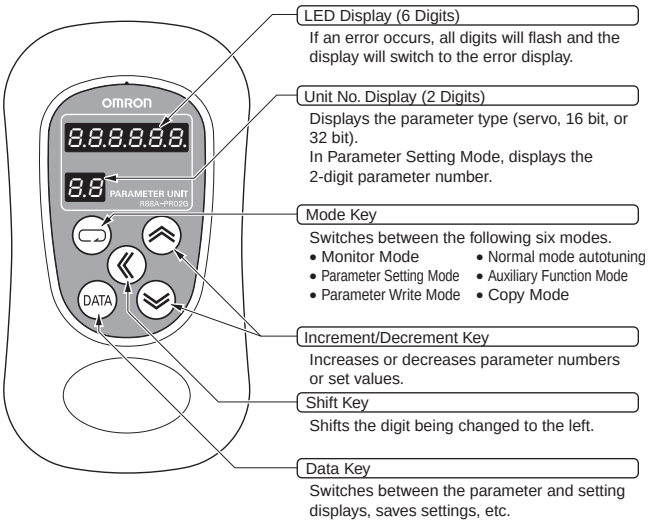


## ● Servo Parameters

| Parameter name | Explanation |
|---|---|
| Default Display | Selects the data to be displayed on the 7-segment LED display on the front panel. |
| Torque Limit Selection | Selects the torque limit function, or the torque feed-forward function during speed control. |
| Drive Prohibit Input Selection | Selects the function for the Forward and Reverse Drive Prohibit Inputs (CN1 POT: pin 19, NOT: pin 20). |
| Communications Control | Controls errors and warnings for MECHATROLINK-II communications. |
| Power ON Address Display Duration Setting | Sets the duration to display the node address when the control power is turned ON. |
| Speed Monitor (SP) Selection | Selects the output to the Analog Speed Monitor (SP on the front panel). |
| Torque Monitor (IM) Selection | Selects the output to the Analog Torque Monitor (IM on the front panel). |
| Prohibit Parameter Changes via Network | Allows/prohibits parameter changes via the network. |
| Operation Switch When Using Absolute Encoder | Selects how the absolute encoder is used. |
| RS-232 Baud Rate Setting | Sets the baud rate for RS-232 communications. |
| Position Loop Gain (RT) | Sets the position loop responsiveness. |
| Speed Loop Gain (RT) | Sets the speed loop responsiveness. |
| Speed Loop Integration Time Constant (RT) | Adjusts the speed loop integration time constant. |
| Speed Feedback Filter Time Constant (RT) | Sets the type of speed detection filter time constant. Normally, use a setting of 0. |
| Torque Command Filter Time Constant (RT) | Adjusts the first-order lag filter time constant for the torque command section. |
| Speed Feed-forward Amount (RT) | Sets the speed feed-forward amount. |
| Feed-forward Filter Time Constant (RT) | Sets the time constant for the speed feed-forward first-order lag filter. |
| Position Loop Gain 2 (RT) | Sets the position loop gain when using gain 2 switching. |
| Speed Loop Gain 2 (RT) | Sets the speed loop gain when using gain 2 switching. |
| Speed Loop Integration Time Constant 2 (RT) | Sets the speed loop integration time constant when using gain 2 switching. |
| Speed Feedback Filter Time Constant 2 (RT) | Sets the speed detection filter when using gain 2 switching. |
| Torque Command Filter Time Constant 2 (RT) | Sets the first-order lag filter time constant for the torque command section when using gain 2 switching. |

| Parameter name | Explanation |
|---|---|
| Notch Filter 1 Frequency | Sets the notch frequency of notch filter 1 for resonance suppression. |
| Notch Filter 1 Width | Selects the notch width of notch filter 1 for resonance suppression. |
| Inertia Ratio (RT) | Selects the load inertia as a percentage of the Servomotor rotor inertia. |
| Realtime Autotuning Mode Selection | Sets the operating mode for realtime autotuning. |
| Realtime Autotuning Machine Rigidity Selection | Sets the machine rigidity for realtime autotuning. |
| Adaptive Filter Selection | Enables or disables the adaptive filter. |
| Vibration Filter Selection | Selects the vibration filter type and the switching mode. |
| Normal Mode Autotuning Operation Setting | Sets the operating pattern for normal mode autotuning. |
| Overrun Limit Setting | Sets the Servomotor's allowable operating range for the position command input range. |
| Instantaneous Speed Observer Setting (RT) | The Instantaneous Speed Observer improves speed detection accuracy, thereby improving responsiveness and reducing vibration when stopping. |
| Notch Filter 2 Frequency | Sets the notch frequency of notch filter 2 for resonance suppression. |
| Notch Filter 2 Width | Selects the notch width of notch filter 2 for resonance suppression. |
| Notch Filter 2 Depth | Selects the notch depth of notch filter 2 for resonance suppression. |
| Vibration Frequency 1 | Sets the vibration frequency 1 for damping control to suppress vibration at the end of the load. |
| Vibration Filter 1 Setting | When setting Vibration Frequency 1 (Pn02B), reduce this setting if torque saturation occurs, or increase it to make the movement faster. |
| Vibration Frequency 2 | Sets the vibration frequency 2 for damping control to suppress vibration at the end of the load. |
| Vibration Filter 2 Setting | Sets vibration filter 2 for damping control to suppress vibration at the end of the load. |
| Adaptive Filter Table Number Display | Displays the table entry number corresponding to the frequency of the adaptive filter. |
| Gain Switching Operating Mode Selection (RT) | Enables or disables gain switching. |
| Gain Switch Setting (RT) | Sets the trigger for gain switching.<br>The details depend on the control mode. |
| Gain Switch Time (RT) | Enabled when the Gain Switch Setting (Pn031) is set to 3, or 5 to 10. Sets the lag time from the trigger detection to actual gain switching when switching from gain 2 to gain 1. |
| Gain Switch Level Setting (RT) | Sets the judgment level to switch between Gain 1 and Gain 2 when the Gain Switch Setting (Pn031) is set to 3, 5, 6, 9, or 10. The unit for the setting depends on the condition set in the Gain Switch Setting (Pn031). |
| Gain Switch Hysteresis Setting (RT) | Sets the hysteresis of the judgment level for the Gain Switch Level Setting (Pn033) when the Gain Switch Setting (Pn031) is set to 3, 5, 6, 9, or 10.<br>The unit for the setting depends on the condition set for the Gain Switch Setting (Pn031). |
| Position Loop Gain Switching Time (RT) | This parameter can prevent the position loop gain from increasing suddenly when the position loop gain and position loop gain 2 differ by a large amount. |
| Jog Speed | Sets the jog operation speed with the Parameter Unit or CX-Drive. |
| Emergency Stop Input Setting | Enables the Emergency Stop Input (STOP). |
| Origin Proximity Input Logic Setting | Sets the logic for the Origin Proximity Input (DEC). |

| Parameter name | Explanation |
|---|---|
| Operating Direction Setting | Sets the relationship between polarity of operation data sent over the network and the direction of Servomotor rotation. |
| Input Signal Selection | Sets the terminal assignment for Drive Prohibit Input. |
| Speed Limit | Sets the speed limit for torque control mode. |
| Soft Start Acceleration Time | Sets the acceleration time for speed control mode. |
| Soft Start Deceleration Time | Sets the deceleration time for speed control mode. |
| Speed Limit Selection | Sets the speed limit for torque control mode. |
| No.1 Torque Limit | Sets the No.1 Torque Limit for the Servomotor output torque. |
| No.2 Torque Limit | Sets the No.2 Torque Limit for the Servomotor output torque. |
| Positioning Completion Range 1 | Sets the positioning completion range when Positioning Completion 1 (INP1) Output is selected. |
| Speed Conformity Signal Output Width | Sets the detection width for the speed conformity detection (VCMP) signal. |
| Rotation Speed for Motor Rotation Detection | Sets the threshold level for the speed reached (TGON) signal. |
| Positioning Completion Range 2 | Sets the positioning completion range when Positioning Completion 2 (INP2) is selected. |
| Motor Phase Current Offset Re-adjustment Setting | Enables or disables the offset component readjustment function of the Motor Phase Current Detector (CT) for Servo ON command inputs. The readjustment is made when control power is turned ON. |
| Undervoltage Alarm Selection | Selects whether to activate the main power supply undervoltage function (alarm code 13) when the main power supply is interrupted for the duration of the Momentary Hold Time (Pn06D) during Servo ON. |
| Stop Selection for Drive Prohibition Input | Sets the operation used to decelerate to a stop when the Forward Drive Prohibit Input (POT) or Reverse Drive Prohibit Input (NOT) is enabled. |
| Stop Selection with Main Power OFF | Sets the operation to be performed during deceleration and after stopping after the main power supply is turned OFF with the Undervoltage Alarm Selection (Pn065) set to 0. The deviation counter will be reset when the power OFF is detected. |
| Stop Selection for Alarm Generation | Sets the deceleration process and stop status after an alarm is issued by the protective function. The deviation counter will be reset when an alarm is issued. |
| Stop Selection with Servo OFF | Sets the operation after a Servo OFF.<br>The relationship between set values, operation, and deviation counter processing for this parameter is the same as for the Stop Selection with Main Power OFF (Pn067). |
| Brake Timing when Stopped | Sets the duration from Brake Interlock (BKIR) signal detection to Servo OFF. |
| Brake Timing during Operation | Sets the duration from Servo OFF to when the Brake Interlock (BKIR) signal is turned OFF. |
| Regeneration Resistor Selection | Sets the regeneration resistor operation and the regeneration overload (alarm code 18) operation.<br>Set this parameter to 0 if using the built-in regeneration resistor. |
| Momentary Hold Time | Sets the amount of time required to detect shutoff when the main power supply continues to shut off.<br>The main power OFF detection will be disabled if this parameter is set to 1000. |
| Emergency Stop Torque | Sets the torque limit during deceleration because of the Drive Prohibition Input when the Stop Selection for Drive Prohibition Input (Pn066) is set to 2. |
| Overload Detection Level Setting | Sets the overload detection level. |
| Overspeed Detection Level Setting | Sets the overspeed detection level. |

## ● 16-bit Positioning Parameters

| Parameter name | Explanation |
|---|---|
| Backlash Compensation Selection | Enables or disables the backlash compensation for position control, and sets the compensation direction. |
| Backlash Compensation | Sets the backlash compensation amount for position control. |
| Backlash Compensation Time Constant | Sets the backlash compensation time constant for position control. |
| Soft Limit | Enables or disables the soft limit. |
| Origin Range | Sets the threshold for detecting the origin (ZPOINT) in absolute values. |
| Linear Acceleration Constant | Sets the acceleration for positioning operations. |
| Linear Deceleration Constant | Sets the deceleration for positioning operations. |
| Moving Average Time | Sets the moving average time for position commands. |
| Origin Return Mode Settings | Sets the direction for origin return. |
| Origin Return Approach Speed 1 | Sets the operating speed for origin return, from when the origin proximity signal is turned ON, to when it is turned OFF and the latch signal is detected. |
| Origin Return Approach Speed 2 | Sets the operating speed for origin return, from when the latch signal is detected, to when the Origin Return Final Distance (Pn204) is reached. |
| General-purpose Output 1 Function Selection | Selects the function for general-purpose output 1 (OUTM1). |
| General-purpose Output 2 Function Selection | Selects the function for general-purpose output 2 (OUTM2).<br>The set values and the functions are the same as for general-purpose output 1 (OUTM1). |
| General-purpose Output 3 Function Selection | Selects the function for general-purpose output 3 (OUTM3).<br>The set values and the functions are the same as for general-purpose output 1 (OUTM1). |

## ● 32-bit Positioning Parameters

| Parameter name | Explanation |
|---|---|
| Absolute Origin Offset | Sets the offset amount for the encoder position and the mechanical coordinate system position when using an absolute encoder. |
| Forward Software Limit | Sets the soft limit in the forward direction. |
| Reverse Software Limit | Sets the soft limit for the reverse direction. |
| Final Distance for External Input Positioning | Sets the distance to travel after detecting the latch signal input position when performing external input positioning. |
| Origin Return Final Distance | Sets the distance from the latch signal input position to the origin when performing origin return. |
| Electronic Gear Ratio 1 (Numerator) | Sets the numerator for the electronic gear ratio. |
| Electronic Gear Ratio 2 (Denominator) | Sets the denominator for the electronic gear ratio. |
| Deviation Counter Overflow Level | Sets the deviation counter overflow level. |

## Dimensions

(Unit: mm)

### ●Servo Drives

- **Single-phase 100 VAC (50 to 100 W)**
  **R88D-GNA5L-ML2**
  **R88D-GN01L-ML2**
- **Single-phase 200 VAC (50 to 200 W)**
  **R88D-GN01H-ML2**
  **R88D-GN02H-ML2**

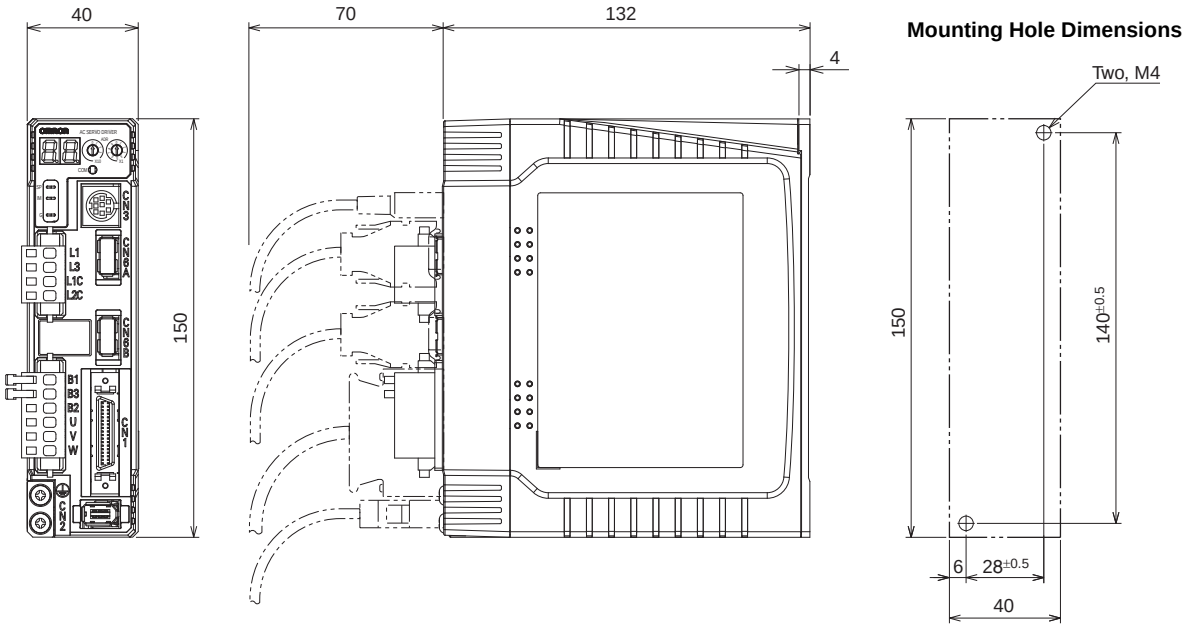


- **Single-phase 100 VAC (200 W)**
  **R88D-GN02L-ML2**
- **Single-phase 200 VAC (400 W)**
  **R88D-GN04H-ML2**

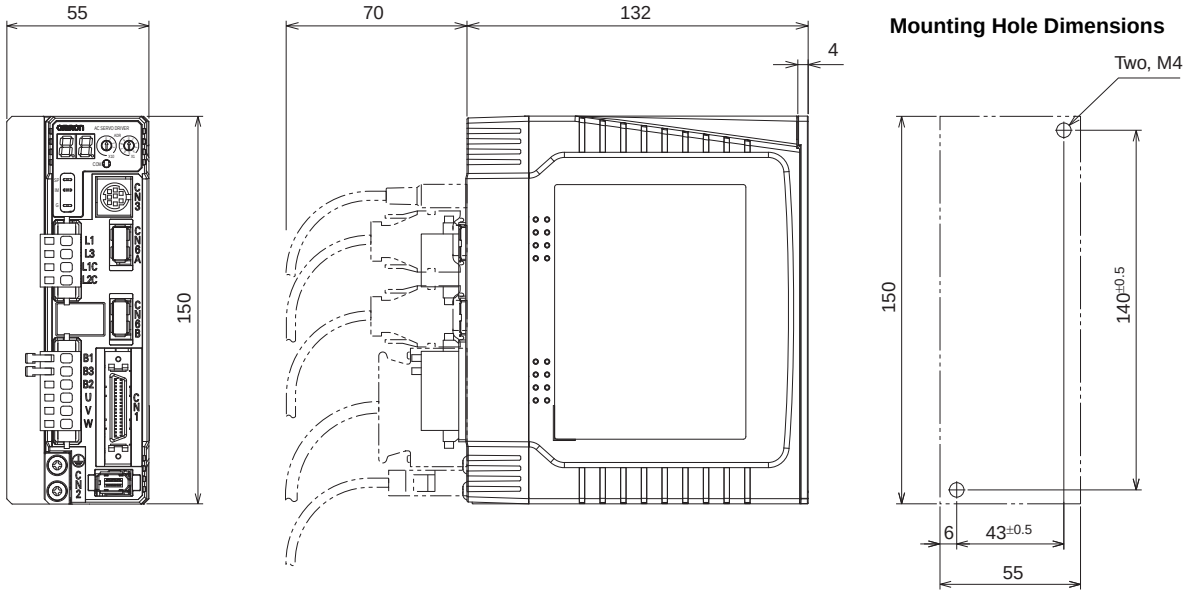

- **Single-phase 100 VAC (400 W)**
  **R88D-GN04L-ML2**
- **Single-phase/Three-phase 200 VAC (750 W)**
  **R88D-GN08H-ML2**

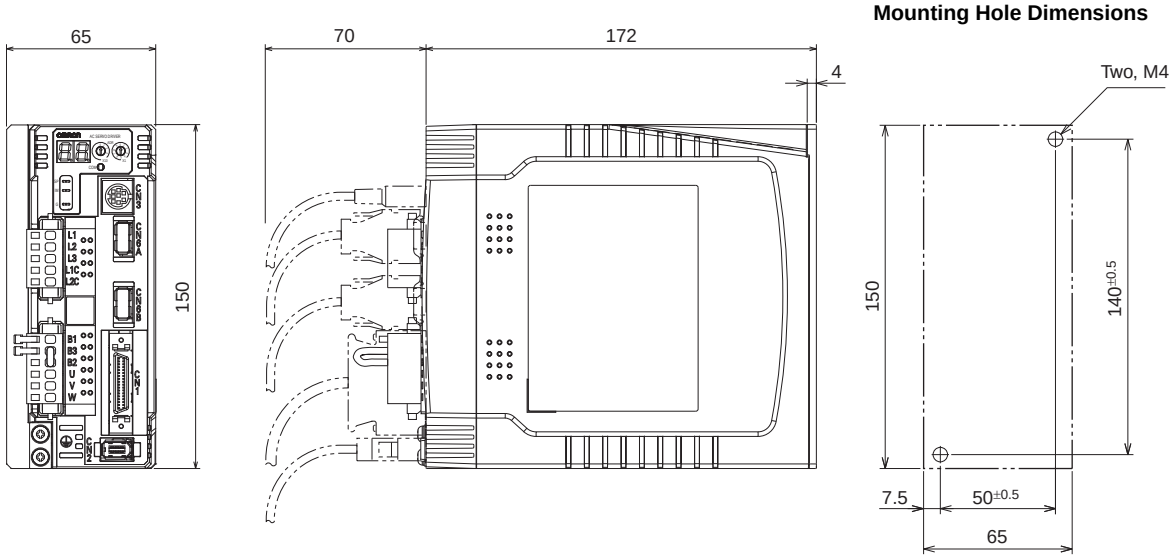


- **Single-phase/Three-phase 200 VAC (900 W to 1.5 kW)**
  **R88D-GN10H-ML2**
  **R88D-GN15H-ML2**

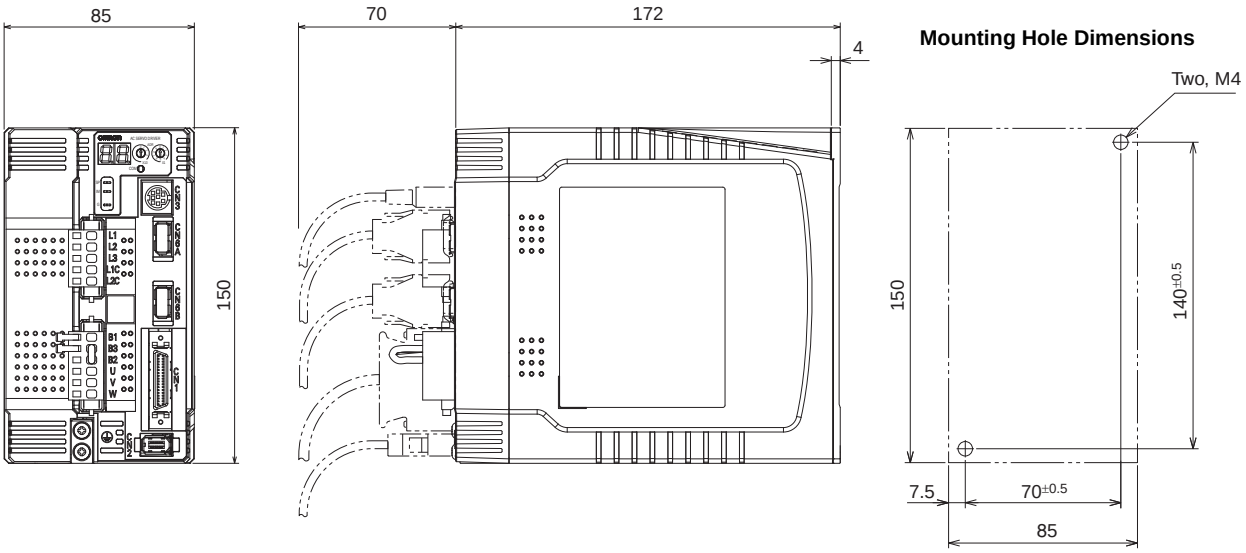

- **Three-phase 200 VAC (2 kW)**
  **R88D-GN20H-ML2**

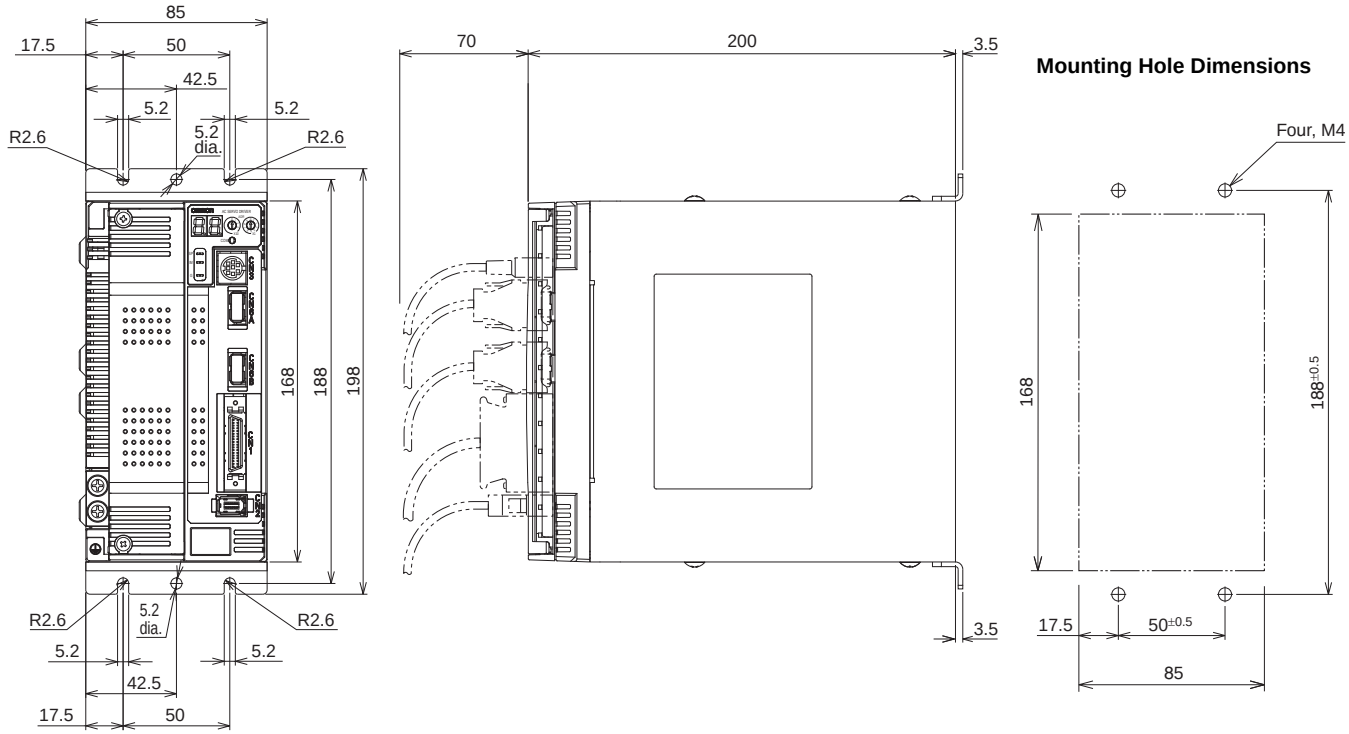


- **Three-phase 200 VAC (2 to 5 kW)**
  **R88D-GN30H-ML2**
  **R88D-GN50H-ML2**

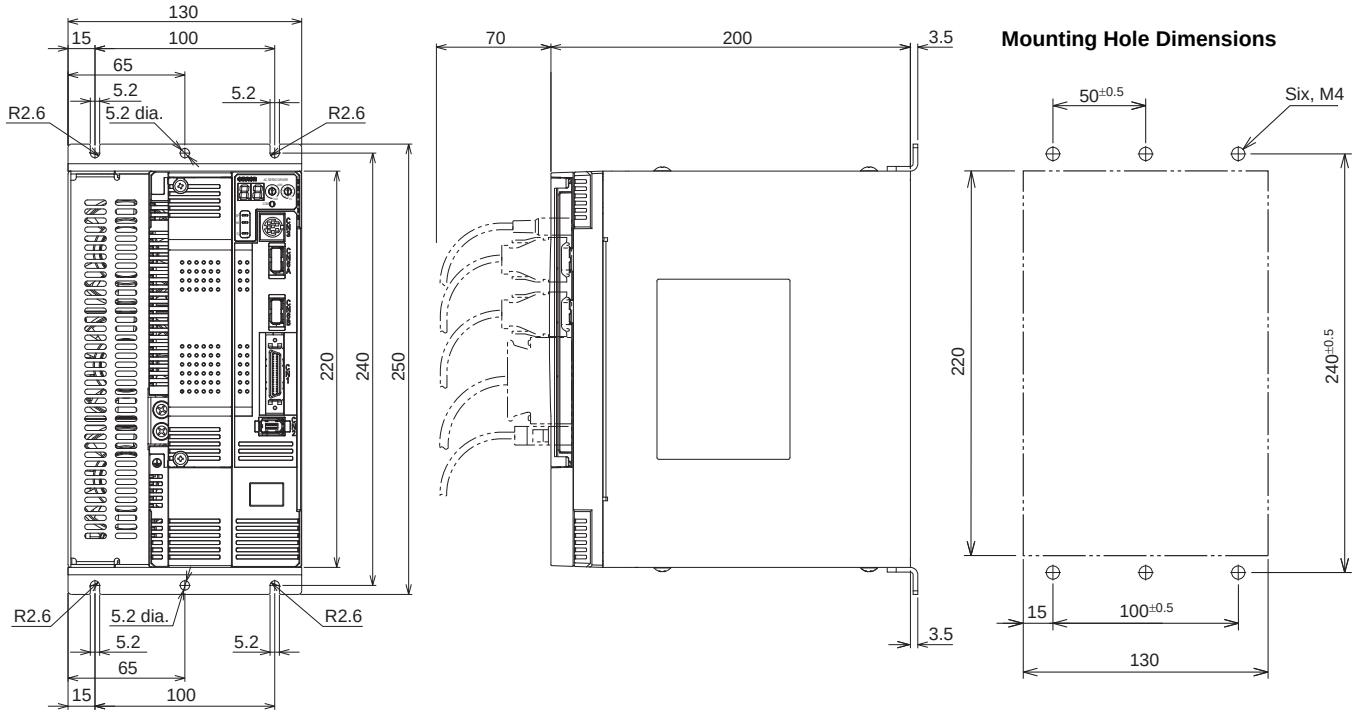

- **Three-phase 200 VAC (7.5 kW)**
  **R88D-GN75H-ML2**
  **Front Panel Mounting (Using Mounting Brackets)**

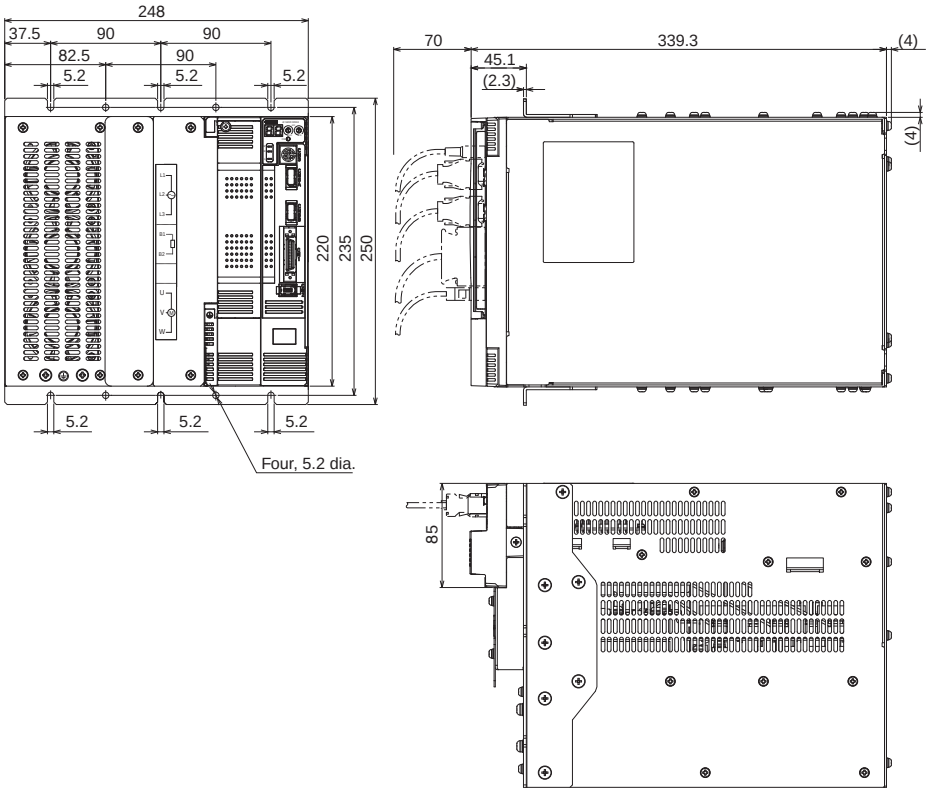


**Mounting Hole Dimensions**

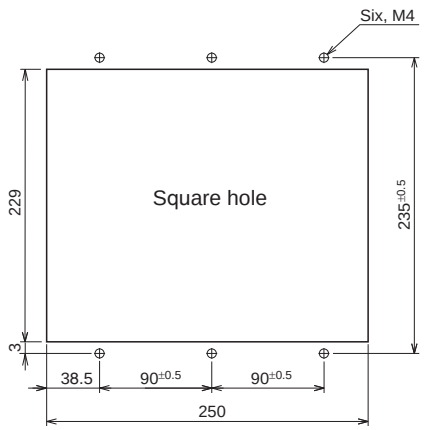

## ● Servomotors

### 3,000-r/min Cylindrical Servomotors

- **50 W/100 W**

| INC | ABS |
|---|---|
| R88M-G05030H (-S2) | R88M-G05030T (-S2) |
| R88M-G10030L (-S2) | R88M-G10030S (-S2) |
| R88M-G10030H (-S2) | R88M-G10030T (-S2) |
| R88M-G05030H-B (S2) | R88M-G05030T-B (S2) |
| R88M-G10030L-B (S2) | R88M-G10030S-B (S2) |
| R88M-G10030H-B (S2) | R88M-G10030T-B (S2) |

| Model | LL | LN |
|---|---|---|
| R88M-G05030□ | 72 | 26.5 |
| R88M-G10030□ | 92 | 46.5 |
| R88M-G05030□-B | 102 | 26.5 |
| R88M-G10030□-B | 122 | 46.5 |

*The empty bax in the L, H, L, T or S.
**Note:** The standard models have a straight shaft. A model with a key and tap is indicated by adding "S2" to the end of the model number.

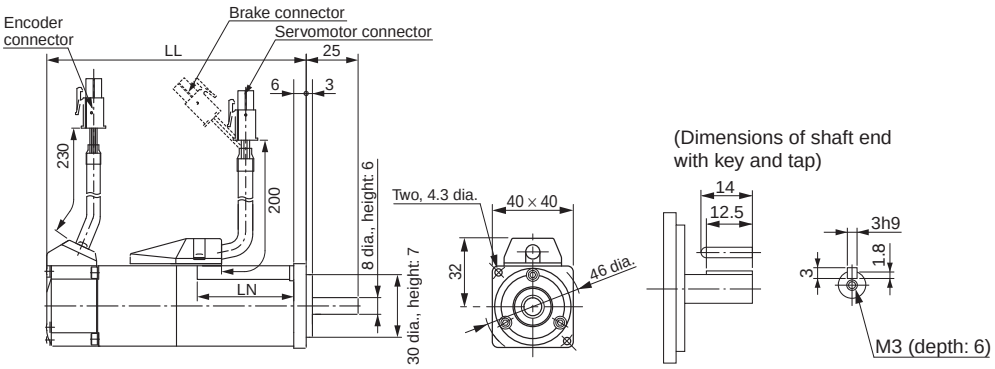


- **200 W/400 W/750 W**

| INC | ABS |
|---|---|
| R88M-G20030L (-S2) | R88M-G20030S (-S2) |
| R88M-G40030L (-S2) | R88M-G40030S (-S2) |
| R88M-G20030H (-S2) | R88M-G20030T (-S2) |
| R88M-G40030H (-S2) | R88M-G40030T (-S2) |
| R88M-G75030H (-S2) | R88M-G75030T (-S2) |
| R88M-G20030L-B (S2) | R88M-G20030S-B (S2) |
| R88M-G40030L-B (S2) | R88M-G40030S-B (S2) |
| R88M-G20030H-B (S2) | R88M-G20030T-B (S2) |
| R88M-G40030H-B (S2) | R88M-G40030T-B (S2) |
| R88M-G75030H-B (S2) | R88M-G75030T-B (S2) |

| Model | LL | LR | S | D1 | D2 | C | G | Z | KL1 | QK | b | h | M | t1 | L |
|---|---|---|---|---|---|---|---|---|---|---|---|---|---|---|---|
| R88M-G20030□ | 79.5 | 30 | 11 | 70 | 50 | 60 | 6.5 | 4.5 | 43 | 18 | 4h9 | 4 | M4 | 2.5 | 8 |
| R88M-G40030□ | 99 | | 14 | | | | | | | 22.5 | 5h9 | 5 | M5 | 3 | 10 |
| R88M-G75030□ | 112.2 | 35 | 19 | 90 | 70 | 80 | 8 | 6 | 53 | 22 | 6h9 | 6 | | 3.5 | |
| R88M-G20030□-B | 116 | 30 | 11 | 70 | 50 | 60 | 6.5 | 4.5 | 43 | 18 | 4h9 | 4 | M4 | 2.5 | 8 |
| R88M-G40030□-B | 135.5 | | 14 | | | | | | | 22.5 | 5h9 | 5 | M5 | 3 | 10 |
| R88M-G75030□-B | 149.2 | 35 | 19 | 90 | 70 | 80 | 8 | 6 | 53 | 22 | 6h9 | 6 | | 3.5 | |

*The empty bax in the L, H, L, T or S.
**Note:** The standard models have a straight shaft. A model with a key and tap is indicated by adding "S2" to the end of the model number.

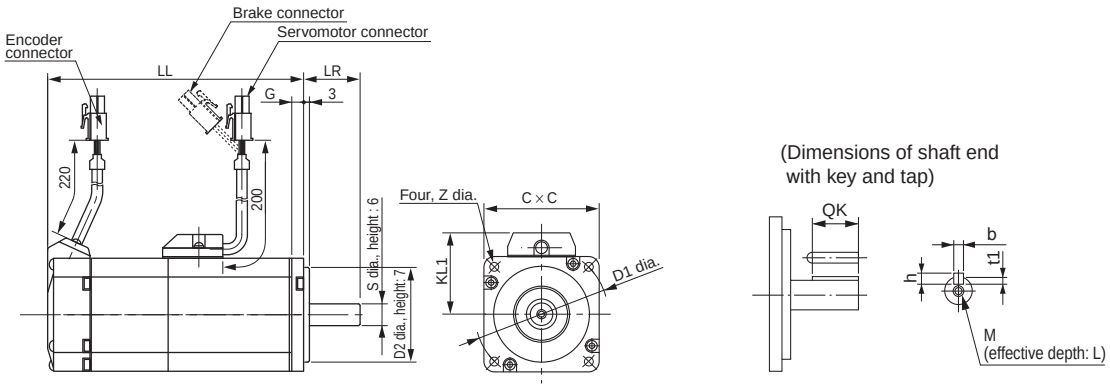

- **1 kW/1.5 kW/2 kW**

**ABS**

**R88M-G1K030T (-S2)**
**R88M-G1K530T (-S2)**
**R88M-G2K030T (-S2)**
**R88M-G1K030T-B (S2)**
**R88M-G1K530T-B (S2)**
**R88M-G2K030T-B (S2)**

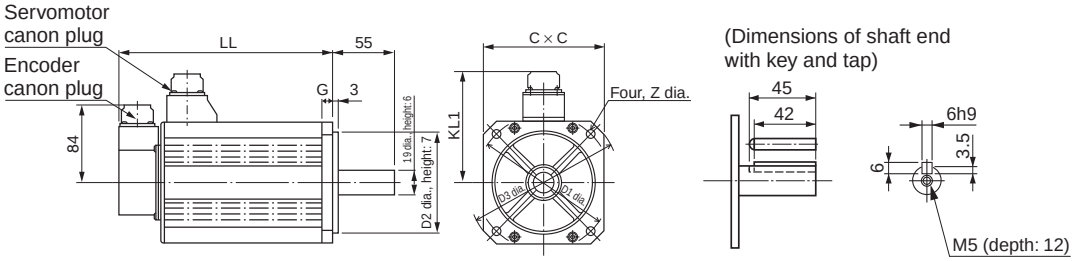


| Model | LL | D1 | D2 | C | D3 | G | KL1 | Z |
|---|---|---|---|---|---|---|---|---|
| R88M-G1K030T | 175 | 100 | 80 | 90 | 120 | 7 | 98 | 6.6 |
| R88M-G1K530T | 180 | 115 | 95 | 100 | 135 | 10 | 103 | 9 |
| R88M-G2K030T | 205 | | | | | | | |
| R88M-G1K030T-B | 200 | 100 | 80 | 90 | 120 | 7 | 98 | 6.6 |
| R88M-G1K530T-B | 205 | 115 | 95 | 100 | 135 | 10 | 103 | 9 |
| R88M-G2K030T-B | 230 | | | | | | | |

**Note:** The standard models have a straight shaft.
A model with a key and tap is indicated by adding “S2” to the end of the model number.

- **3 kW**

**ABS**

**R88M-G3K030T (-S2)**
**R88M-G3K030T-B (S2)**

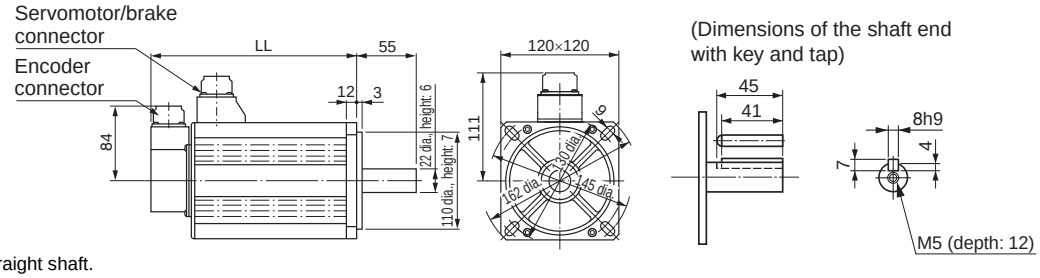


| Model | LL |
|---|---|
| R88M-G3K030T | 217 |
| R88M-G3K030T-B | 242 |

**Note:** The standard models have a straight shaft.
A model with a key and tap is indicated by adding “S2” to the end of the model number.

- **4 kW/5 kW**

**ABS**

**R88M-G4K030T (-S2)**
**R88M-G5K030T (-S2)**
**R88M-G4K030T-B (S2)**
**R88M-G5K030T-B (S2)**

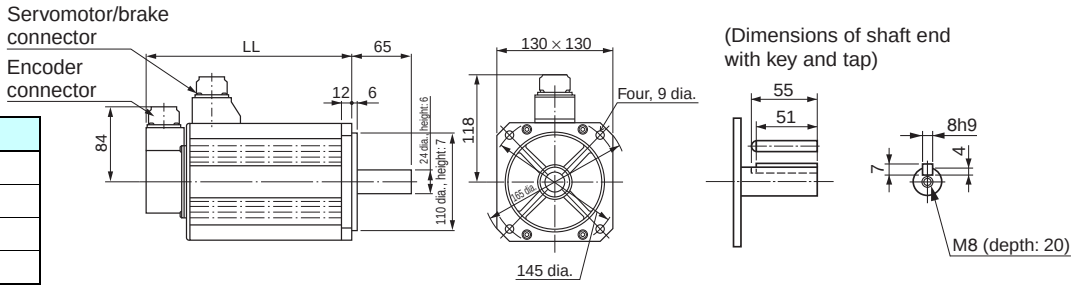


| Model | LL |
|---|---|
| R88M-G4K030T | 240 |
| R88M-G5K030T | 280 |
| R88M-G4K030T-B | 265 |
| R88M-G5K030T-B | 305 |

**Note:** The standard models have a straight shaft.
A model with a key and tap is indicated by adding “S2” to the end of the model number.

## 3,000-r/min Flat Servomotors

- **100 W/200 W/400 W**

| INC | ABS |
|---|---|
| R88M-GP10030L (-S2) | R88M-GP10030S (-S2) |
| R88M-GP20030L (-S2) | R88M-GP20030S (-S2) |
| R88M-GP40030L (-S2) | R88M-GP40030S (-S2) |
| R88M-GP10030H (-S2) | R88M-GP10030T (-S2) |
| R88M-GP20030H (-S2) | R88M-GP20030T (-S2) |
| R88M-GP40030H (-S2) | R88M-GP40030T (-S2) |
| R88M-GP10030L-B (S2) | R88M-GP10030S-B (S2) |
| R88M-GP20030L-B (S2) | R88M-GP20030S-B (S2) |
| R88M-GP40030L-B (S2) | R88M-GP40030S-B (S2) |
| R88M-GP10030H-B (S2) | R88M-GP10030T-B (S2) |
| R88M-GP20030H-B (S2) | R88M-GP20030T-B (S2) |
| R88M-GP40030H-B (S2) | R88M-GP40030T-B (S2) |

| Model | LL | LR | S | D1 | D2 | C | F | G | KL1 | Z | QK | b | h | t1 | M | L |
|---|---|---|---|---|---|---|---|---|---|---|---|---|---|---|---|---|
| R88M-GP10030L<br>R88M-GP10030H | 60.5 | 25 | 8 | 70 | 50 | 60 | 3 | 7 | 43 | 4.5 | 12.5 | 3h9 | 3 | 1.8 | M3 | 6 |
| R88M-GP10030S<br>R88M-GP10030T | 87.5 | | | | | | | | | | | | | | | |
| R88M-GP20030L<br>R88M-GP20030H | 67.5 | 30 | 11 | 90 | 70 | 80 | 5 | 8 | 53 | 5.5 | 18 | 4h9 | 4 | 2.5 | M4 | 8 |
| R88M-GP20030S<br>R88M-GP20030T | 94.5 | | | | | | | | | | | | | | | |
| R88M-GP40030L<br>R88M-GP40030H | 82.5 | | 14 | | | | | | | | 22.5 | 5h9 | 5 | 3.0 | M5 | 10 |
| R88M-GP40030S<br>R88M-GP40030T | 109.5 | | | | | | | | | | | | | | | |
| R88M-GP10030L-B<br>R88M-GP10030H-B | 84.5 | 25 | 8 | 70 | 50 | 60 | 3 | 7 | 43 | 4.5 | 12.5 | 3h9 | 3 | 1.8 | M3 | 6 |
| R88M-GP10030S-B<br>R88M-GP10030T-B | 111.5 | | | | | | | | | | | | | | | |
| R88M-GP20030L-B<br>R88M-GP20030H-B | 100 | 30 | 11 | 90 | 70 | 80 | 5 | 8 | 53 | 5.5 | 18 | 4h9 | 4 | 2.5 | M4 | 8 |
| R88M-GP20030S-B<br>R88M-GP20030T-B | 127 | | | | | | | | | | | | | | | |
| R88M-GP40030L-B<br>R88M-GP40030H-B | 115 | | 14 | | | | | | | | 22.5 | 5h9 | 5 | 3.0 | M5 | 10 |
| R88M-GP40030S-B<br>R88M-GP40030T-B | 142 | | | | | | | | | | | | | | | |

**Note:** The standard models have a straight shaft. A model with a key and tap is indicated by adding “S2” to the end of the model number.

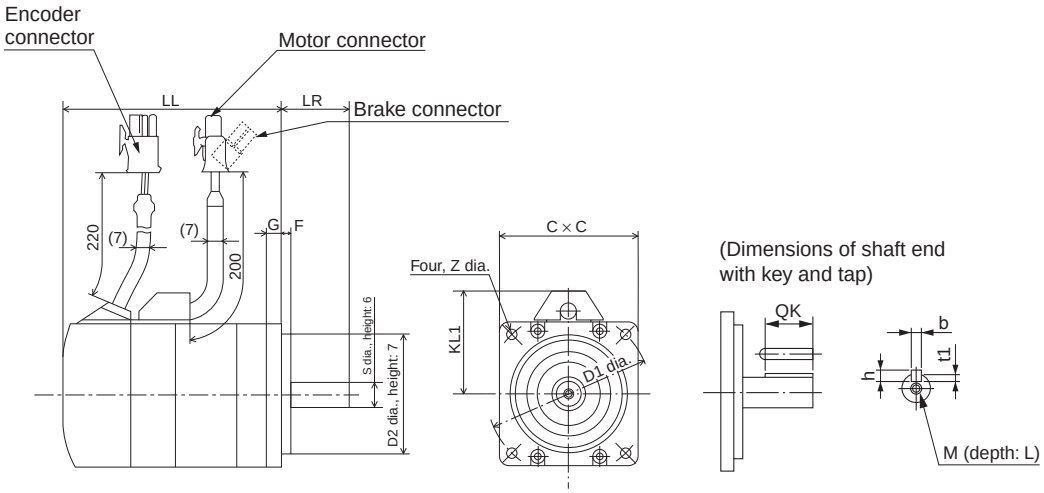

## 2,000-r/min Cylindrical Servomotors

### • 200 VAC: 1 kW/1.5 kW

**ABS**

**R88M-G1K020T (-S2)**
**R88M-G1K520T (-S2)**
**R88M-G1K020T-B (S2)**
**R88M-G1K520T-B (S2)**

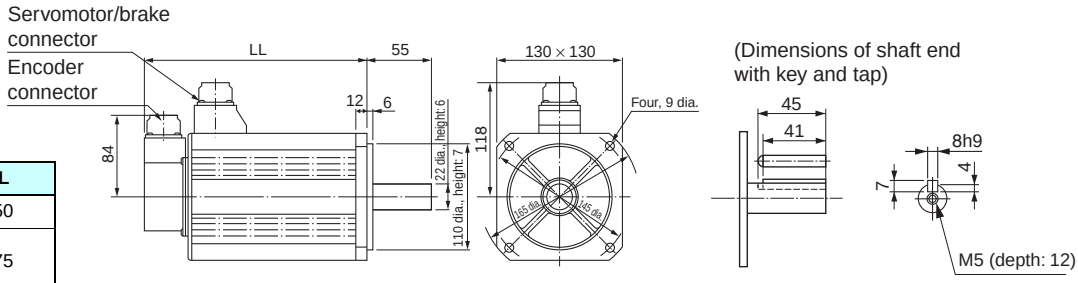


| Model | LL |
|---|---|
| R88M-G1K020T | 150 |
| R88M-G1K520T | 175 |
| R88M-G1K020T-B | |
| R88M-G1K520T-B | 200 |

**Note:** The standard models have a straight shaft.
A model with a key and tap is indicated by adding “S2” to the end of the model number.

### • 200 VAC: 2 kW/3 kW

**ABS**

**R88M-G2K020T (-S2)**
**R88M-G3K020T (-S2)**
**R88M-G2K020T-B (S2)**
**R88M-G3K020T-B (S2)**

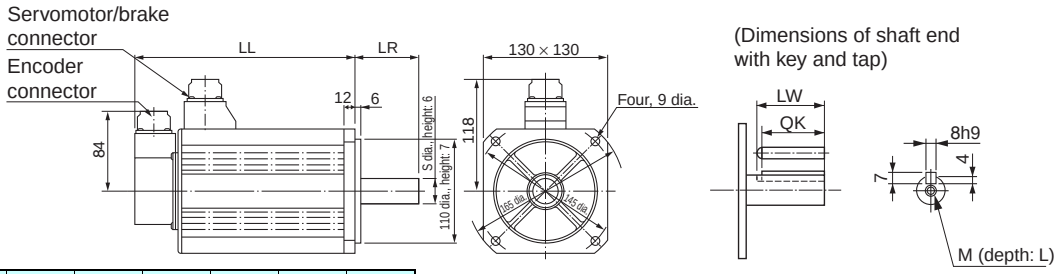


| Model | LL | LR | S | LW | QK | M | L |
|---|---|---|---|---|---|---|---|
| R88M-G2K020T | 200 | 55 | 22 | 45 | 41 | M5 | 12 |
| R88M-G3K020T | 250 | 65 | 24 | 55 | 51 | M8 | 20 |
| R88M-G2K020T-B | 225 | 55 | 22 | 45 | 41 | M5 | 12 |
| R88M-G3K020T-B | 275 | 65 | 24 | 55 | 51 | M8 | 20 |

**Note:** The standard models have a straight shaft.
A model with a key and tap is indicated by adding “S2” to the end of the model number.

### • 200 VAC : 4 kW/5 kW

**ABS**

**R88M-G4K020T (-S2)**
**R88M-G5K020T (-S2)**
**R88M-G4K020T-B (S2)**
**R88M-G5K020T-B (S2)**

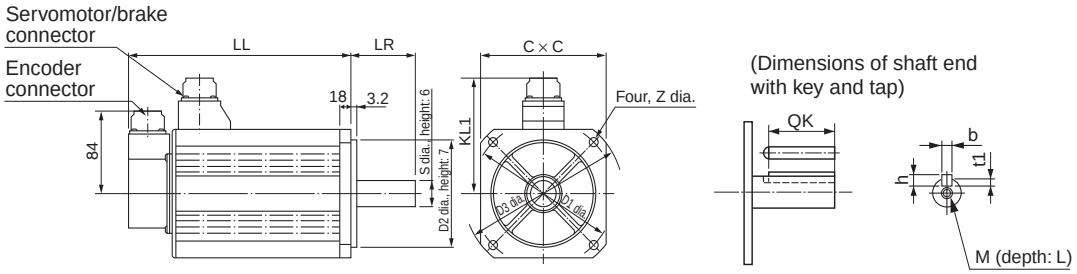


| Model | LL | LR | S | D1 | D2 | C | D3 | KL1 | Z | QK | b | h | t1 | M | L |
|---|---|---|---|---|---|---|---|---|---|---|---|---|---|---|---|
| R88M-G4K020T | 242 | 65 | 28 | 165 | 130 | 150 | 190 | 128 | 11 | 51 | 8h9 | 7 | 4 | M8 | 20 |
| R88M-G5K020T | 225 | 70 | 35 | 200 | 114.3 | 176 | 233 | 143 | 13.5 | 50 | 10h9 | 8 | 5 | M12 | 25 |
| R88M-G4K020T-B | 267 | 65 | 28 | 165 | 130 | 150 | 190 | 128 | 11 | 51 | 8h9 | 7 | 4 | M8 | 20 |
| R88M-G5K020T-B | 250 | 70 | 35 | 200 | 114.3 | 176 | 233 | 143 | 13.5 | 50 | 10h9 | 8 | 5 | M12 | 25 |

**Note:** The standard models have a straight shaft. A model with a key and tap is indicated by adding “S2” to the end of the model number.

## 1,500-r/min Cylindrical Servomotors

- **7.5 kW**

**ABS**

**R88M-G7K515T (-S2)**
**R88M-G7K515T-B (S2)**

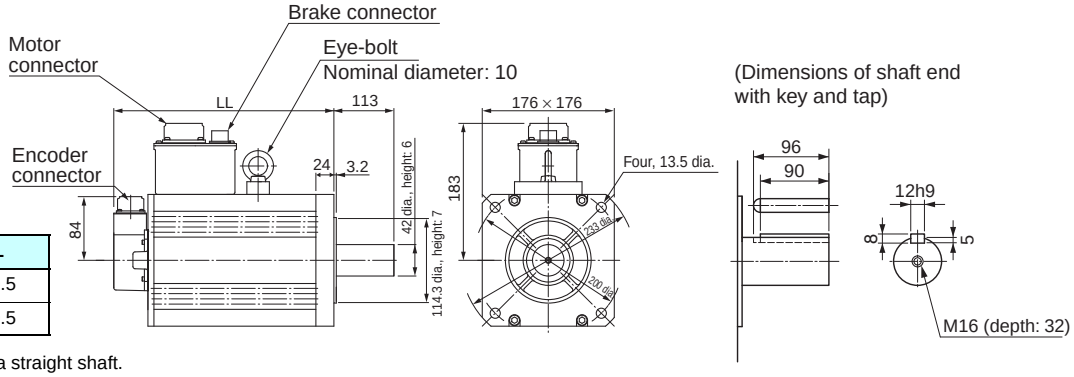


| Model | LL |
|---|---|
| R88M-G7K515T | 340.5 |
| R88M-G7K515T-B | 380.5 |

**Note:** The standard models have a straight shaft.
A model with a key and tap is indicated by adding "S2" to the end of the model number.

## 1,000-r/min Cylindrical Servomotors

- **900 W/2 kW**

**ABS**

**R88M-G90010T (-S2)**
**R88M-G2K010T (-S2)**
**R88M-G90010T-B (S2)**
**R88M-G2K010T-B (S2)**

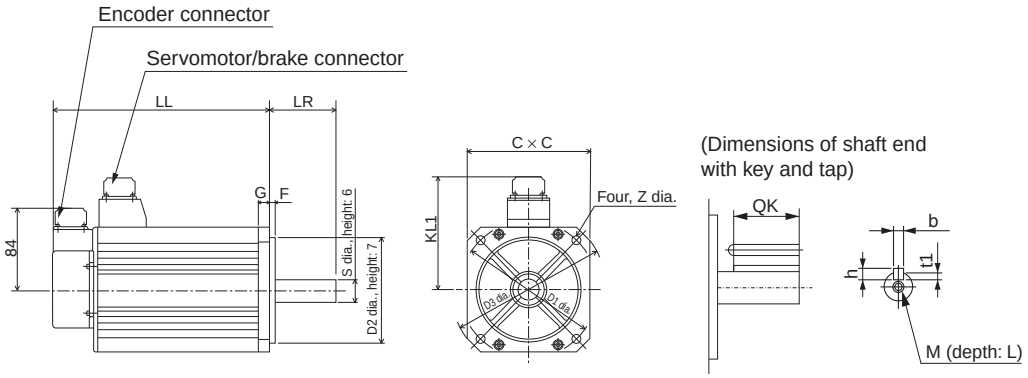


| Model | LL | LR | S | D1 | D2 | C | D3 | F | G | KL1 | Z | QK | b | h | t1 | M | L |
|---|---|---|---|---|---|---|---|---|---|---|---|---|---|---|---|---|---|
| R88M-G90010T | 175 | 70 | 22 | 145 | 110 | 130 | 165 | 6 | 12 | 118 | 9 | 41 | 8h9 | 7 | 4 | M5 | 12 |
| R88M-G2K010T | 182 | 80 | 35 | 200 | 114.3 | 176 | 233 | 3.2 | 18 | 143 | 13.5 | 50 | 10h9 | 8 | 5 | M12 | 25 |
| R88M-G90010T-B | 200 | 70 | 22 | 145 | 110 | 130 | 165 | 6 | 12 | 118 | 9 | 41 | 8h9 | 7 | 4 | M5 | 12 |
| R88M-G2K010T-B | 207 | 80 | 35 | 200 | 114.3 | 176 | 233 | 3.2 | 18 | 143 | 13.5 | 50 | 10h9 | 8 | 5 | M12 | 25 |

**Note:** The standard models have a straight shaft. A model with a key and tap is indicated by adding "S2" to the end of the model number.

- **3 kW**

**ABS**

**R88M-G3K010T (-S2)**
**R88M-G3K010T-B (S2)**

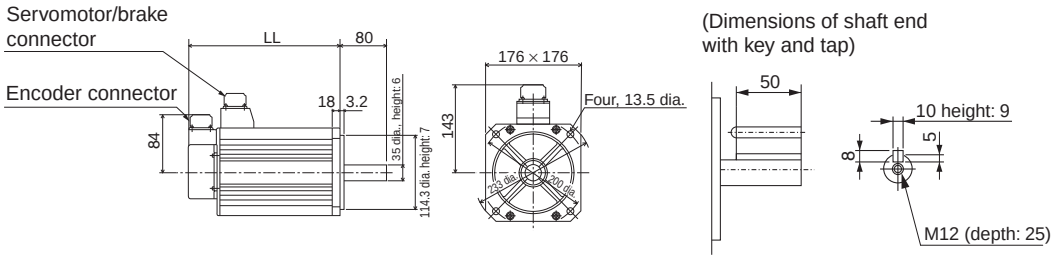


| Model | LL |
|---|---|
| R88M-G3K010T | 222 |
| R88M-G3K010T-B | 271 |

**Note:** The standard models have a straight shaft.
A model with a key and tap is indicated by adding "S2" to the end of the model number.

- **4.5 kW**

**ABS**

**R88M-G4K510T (-S2)**
**R88M-G4K510T-B (S2)**

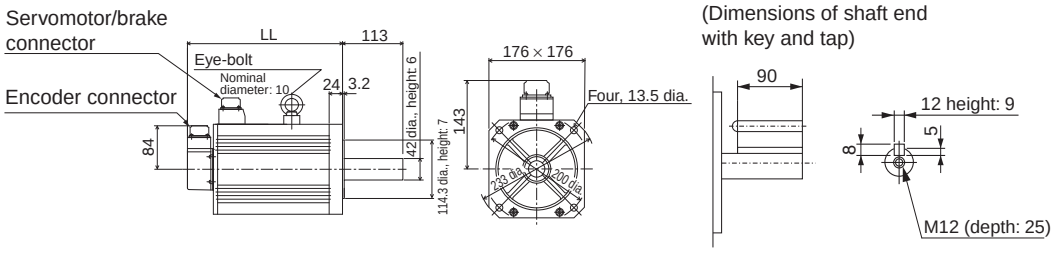


| Model | LL |
|---|---|
| R88M-G4K510T | 300.5 |
| R88M-G4K510T-B | 337.5 |

**Note:** The standard models have a straight shaft.
A model with a key and tap is indicated by adding “S2” to the end of the model number.

- **6 kW**

**ABS**

**R88M-G6K010T (-S2)**
**R88M-G6K010T-B (S2)**

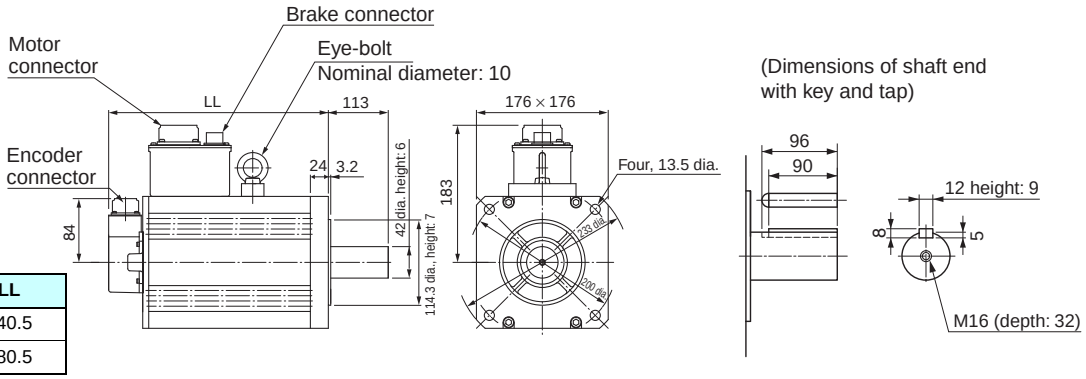


| Model | LL |
|---|---|
| R88M-G6K010T | 340.5 |
| R88M-G6K010T-B | 380.5 |

**Note:** The standard models have a straight shaft.
A model with a key and tap is indicated by adding “S2” to the end of the model number.

## ● Decelerators

**Backlash: 3 Arcminutes Max.**

**<Cylinder Type>**

### ● 3,000-r/min Servomotors (50 to 750 W)

| Model | | | Outline Drawings | Dimensions (mm) | | | | | | | | | | | |
|---|---|---|---|---|---|---|---|---|---|---|---|---|---|---|---|
| | | | | LM | LR | C1 | C2 | D1 | D2 | D3 | D4 | D5 | E | F1 | F2 |
| 50W | 1/5 | R88G-HPG11B05100B□ | 1 *4 | 39.5 | 42 | 40 | 40 × 40 | 46 | 46 | 40 | 39.5 | 29 | 27 | 2.2 | 15 |
| | 1/9 | R88G-HPG11B09050B□ | 1 *4 | 39.5 | 42 | 40 | 40 × 40 | 46 | 46 | 40 | 39.5 | 29 | 27 | 2.2 | 15 |
| | 1/21 | R88G-HPG14A21100B□ | 1 | 64.0 | 58 | 60 | 60 × 60 | 70 | 46 | 56 | 55.5 | 40 | 37 | 2.5 | 21 |
| | 1/33 | R88G-HPG14A33050B□ | 1 | 64.0 | 58 | 60 | 60 × 60 | 70 | 46 | 56 | 55.5 | 40 | 37 | 2.5 | 21 |
| | 1/45 | R88G-HPG14A45050B□ | 1 | 64.0 | 58 | 60 | 60 × 60 | 70 | 46 | 56 | 55.5 | 40 | 37 | 2.5 | 21 |
| 100W | 1/5 | R88G-HPG11B05100B□ | 1 *4 | 39.5 | 42 | 40 | 40 × 40 | 46 | 46 | 40 | 39.5 | 29 | 27 | 2.2 | 15 |
| | 1/11 | R88G-HPG14A11100B□ | 1 | 64.0 | 58 | 60 | 60 × 60 | 70 | 46 | 56 | 55.5 | 40 | 37 | 2.5 | 21 |
| | 1/21 | R88G-HPG14A21100B□ | 1 | 64.0 | 58 | 60 | 60 × 60 | 70 | 46 | 56 | 55.5 | 40 | 37 | 2.5 | 21 |
| | 1/33 | R88G-HPG20A33100B□ | 2 | 66.5 | 80 | 90 | 55 dia. | 105 | 46 | 85 | 84 | 59 | 53 | 7.5 | 27 |
| | 1/45 | R88G-HPG20A45100B□ | 2 | 66.5 | 80 | 90 | 55 dia. | 105 | 46 | 85 | 84 | 59 | 53 | 7.5 | 27 |
| 200W | 1/5 | R88G-HPG14A05200B□ | 1 | 64.0 | 58 | 60 | 60 × 60 | 70 | 70 | 56 | 55.5 | 40 | 37 | 2.5 | 21 |
| | 1/11 | R88G-HPG14A11200B□ | 1 | 64.0 | 58 | 60 | 60 × 60 | 70 | 70 | 56 | 55.5 | 40 | 37 | 2.5 | 21 |
| | 1/21 | R88G-HPG20A21200B□ | 1 | 71.0 | 80 | 90 | 90 × 90 | 105 | 70 | 85 | 84 | 59 | 53 | 7.5 | 27 |
| | 1/33 | R88G-HPG20A33200B□ | 2 | 71.0 | 80 | 90 | 89 dia. | 105 | 70 | 85 | 84 | 59 | 53 | 7.5 | 27 |
| | 1/45 | R88G-HPG20A45200B□ | 2 | 71.0 | 80 | 90 | 89 dia. | 105 | 70 | 85 | 84 | 59 | 53 | 7.5 | 27 |
| 400W | 1/5 | R88G-HPG14A05400B□ | 1 | 64 | 58 | 60 | 60 × 60 | 70 | 70 | 56 | 55.5 | 40 | 37 | 2.5 | 21 |
| | 1/11 | R88G-HPG20A11400B□ | 2 | 71 | 80 | 90 | 89 dia. | 105 | 70 | 85 | 84 | 59 | 53 | 7.5 | 27 |
| | 1/21 | R88G-HPG20A21400B□ | 2 | 71 | 80 | 90 | 89 dia. | 105 | 70 | 85 | 84 | 59 | 53 | 7.5 | 27 |
| | 1/33 | R88G-HPG32A33400B□ | 2 | 104 | 133 | 120 | 122 dia. | 135 | 70 | 115 | 114 | 84 | 98 | 12.5 | 35 |
| | 1/45 | R88G-HPG32A45400B□ | 2 | 104 | 133 | 120 | 122 dia. | 135 | 70 | 115 | 114 | 84 | 98 | 12.5 | 35 |
| 750W (200V) | 1/5 | R88G-HPG20A05750B□ | 1 | 78 | 80 | 90 | 80 × 80 | 105 | 90 | 85 | 84 | 59 | 53 | 7.5 | 27 |
| | 1/11 | R88G-HPG20A11750B□ | 1 | 78 | 80 | 90 | 80 × 80 | 105 | 90 | 85 | 84 | 59 | 53 | 7.5 | 27 |
| | 1/21 | R88G-HPG32A21750B□ | 2 | 104 | 133 | 120 | 122 dia. | 135 | 90 | 115 | 114 | 84 | 98 | 12.5 | 35 |
| | 1/33 | R88G-HPG32A33750B□ | 2 | 104 | 133 | 120 | 122 dia. | 135 | 90 | 115 | 114 | 84 | 98 | 12.5 | 35 |
| | 1/45 | R88G-HPG32A45750B□ | 2 | 104 | 133 | 120 | 122 dia. | 135 | 90 | 115 | 114 | 84 | 98 | 12.5 | 35 |

**Note: 1.** The standard models have a straight shaft.
**Note: 2.** To order a Decelerator with a straight shaft with key and tap, add "J" to the end of the model number, in the place indicated by the box. (e.g., R88G-HPG11B05100BJ)
**Note: 3.** The diameter of the motor shaft insertion portion is the same as the diameter of the shaft of the corresponding motor.
**Note: 4.** Applicable for the servomotors with key, if the key is removed.
**Note: 5.** The dimensional drawings in this document are designed to indicate only the main dimensions. They do not necessarily represent the detailed shapes of the products.

### Outline Drawings 1

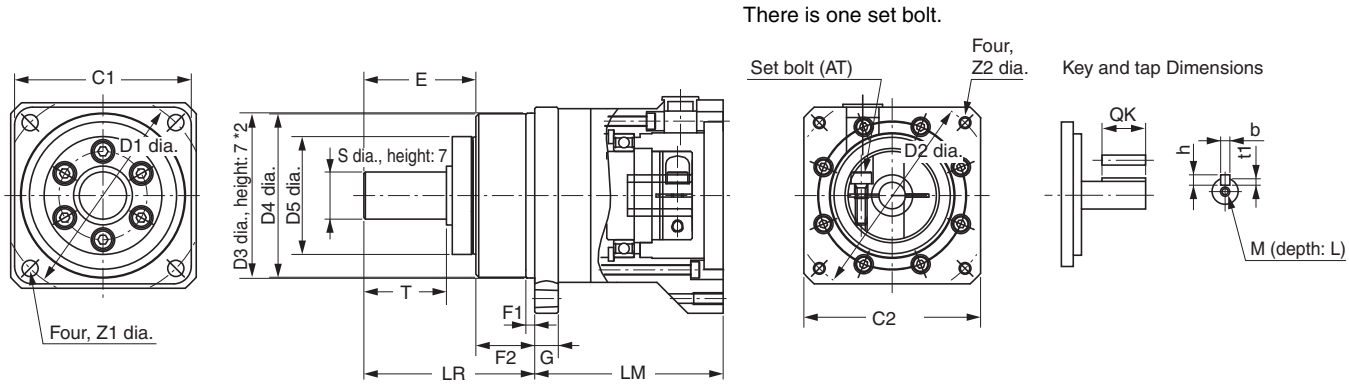


*2. The tolerance for the R88G-HPG50□ and R88G-HPG65□ is h8.

*4. For the R88G-HPG11B series, two set bolts are positioned at an angle of 90° from each other.

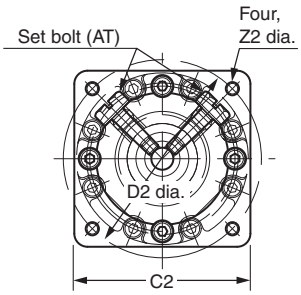

| Dimensions (mm) | | | | | | | | | | | | Model | | |
|---|---|---|---|---|---|---|---|---|---|---|---|---|---|---|
| G | S | T | Z1 | Z2 | AT*1 | Key Dimensions | | | | Tap Dimensions | | | | |
| | | | | | | QK | b | h | t1 | M | L | | | |
| 5 | 8 | 20 | 3.4 | M4 × 9 | M3 | 15 | 3 | 3 | 1.8 | M3 | 6 | **R88G-HPG11B05100B□** | 1/5 | 50W |
| 5 | 8 | 20 | 3.4 | M4 × 9 | M3 | 15 | 3 | 3 | 1.8 | M3 | 6 | **R88G-HPG11B09050B□** | 1/9 | |
| 8 | 16 | 28 | 5.5 | M4 × 10 | M3 | 25 | 5 | 5 | 3 | M4 | 8 | **R88G-HPG14A21100B□** | 1/21 | |
| 8 | 16 | 28 | 5.5 | M4 × 10 | M3 | 25 | 5 | 5 | 3 | M4 | 8 | **R88G-HPG14A33050B□** | 1/33 | |
| 8 | 16 | 28 | 5.5 | M4 × 10 | M3 | 25 | 5 | 5 | 3 | M4 | 8 | **R88G-HPG14A45050B□** | 1/45 | |
| 5 | 8 | 20 | 3.4 | M4 × 9 | M3 | 15 | 3 | 3 | 1.8 | M3 | 6 | **R88G-HPG11B05100B□** | 1/5 | 100W |
| 8 | 16 | 28 | 5.5 | M4 × 10 | M3 | 25 | 5 | 5 | 3 | M4 | 8 | **R88G-HPG14A11100B□** | 1/11 | |
| 8 | 16 | 28 | 5.5 | M4 × 10 | M3 | 25 | 5 | 5 | 3 | M4 | 8 | **R88G-HPG14A21100B□** | 1/21 | |
| 10 | 25 | 42 | 9 | M4 × 10 | M4 | 36 | 8 | 7 | 4 | M6 | 12 | **R88G-HPG20A33100B□** | 1/33 | |
| 10 | 25 | 42 | 9 | M4 × 10 | M4 | 36 | 8 | 7 | 4 | M6 | 12 | **R88G-HPG20A45100B□** | 1/45 | |
| 8 | 16 | 28 | 5.5 | M4 × 10 | M4 | 25 | 5 | 5 | 3 | M4 | 8 | **R88G-HPG14A05200B□** | 1/5 | 200W |
| 8 | 16 | 28 | 5.5 | M4 × 10 | M4 | 25 | 5 | 5 | 3 | M4 | 8 | **R88G-HPG14A11200B□** | 1/11 | |
| 10 | 25 | 42 | 9 | M4 × 10 | M4 | 36 | 8 | 7 | 4 | M6 | 12 | **R88G-HPG20A21200B□** | 1/21 | |
| 10 | 25 | 42 | 9 | M4 × 10 | M4 | 36 | 8 | 7 | 4 | M6 | 12 | **R88G-HPG20A33200B□** | 1/33 | |
| 10 | 25 | 42 | 9 | M4 × 10 | M4 | 36 | 8 | 7 | 4 | M6 | 12 | **R88G-HPG20A45200B□** | 1/45 | |
| 8 | 16 | 28 | 5.5 | M4 × 10 | M4 | 25 | 5 | 5 | 3 | M4 | 8 | **R88G-HPG14A05400B□** | 1/5 | 400W |
| 10 | 25 | 42 | 9 | M4 × 10 | M4 | 36 | 8 | 7 | 4 | M6 | 12 | **R88G-HPG20A11400B□** | 1/11 | |
| 10 | 25 | 42 | 9 | M4 × 10 | M4 | 36 | 8 | 7 | 4 | M6 | 12 | **R88G-HPG20A21400B□** | 1/21 | |
| 13 | 40 | 82 | 11 | M4 × 10 | M4 | 70 | 12 | 8 | 5 | M10 | 20 | **R88G-HPG32A33400B□** | 1/33 | |
| 13 | 40 | 82 | 11 | M4 × 10 | M4 | 70 | 12 | 8 | 5 | M10 | 20 | **R88G-HPG32A45400B□** | 1/45 | |
| 10 | 25 | 42 | 9 | M5 × 12 | M4 | 36 | 8 | 7 | 4 | M6 | 12 | **R88G-HPG20A05750B□** | 1/5 | 750W (200V) |
| 10 | 25 | 42 | 9 | M5 × 12 | M4 | 36 | 8 | 7 | 4 | M6 | 12 | **R88G-HPG20A11750B□** | 1/11 | |
| 13 | 40 | 82 | 11 | M5 × 12 | M6 | 70 | 12 | 8 | 5 | M10 | 20 | **R88G-HPG32A21750B□** | 1/21 | |
| 13 | 40 | 82 | 11 | M5 × 12 | M6 | 70 | 12 | 8 | 5 | M10 | 20 | **R88G-HPG32A33750B□** | 1/33 | |
| 13 | 40 | 82 | 11 | M5 × 12 | M6 | 70 | 12 | 8 | 5 | M10 | 20 | **R88G-HPG32A45750B□** | 1/45 | |

*1. This is the set bolt.

## Outline Drawings 2

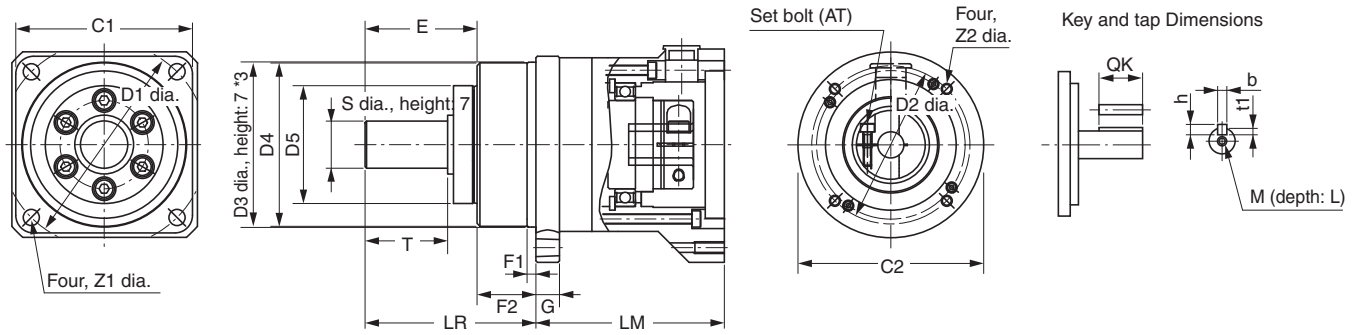


*3. The tolerance for the R88G-HPG50□ and R88G-HPG65□ is h8.

**Backlash: 3 Arcminutes Max.**

**<Cylinder Type>**

### ● 3,000-r/min Servomotors (1 to 5 kW)

| Model | | | Outline Drawings | Dimensions (mm) | | | | | | | | | | | |
|---|---|---|---|---|---|---|---|---|---|---|---|---|---|---|---|
| | | | | LM | LR | C1 | C2 | D1 | D2 | D3 | D4 | D5 | E | F1 | F2 |
| 1kW | 1/5 | R88G-HPG32A052K0B□ | 2 | 110 | 133 | 120 | 135 dia. | 135 | 115 | 115 | 114 | 84 | 98 | 12.5 | 35 |
| | 1/11 | R88G-HPG32A112K0B□ | 2 | 110 | 133 | 120 | 135 dia. | 135 | 115 | 115 | 114 | 84 | 98 | 12.5 | 35 |
| | 1/21 | R88G-HPG32A211K5B□ | 2 | 110 | 133 | 120 | 135 dia. | 135 | 115 | 115 | 114 | 84 | 98 | 12.5 | 35 |
| | 1/33 | R88G-HPG50A332K0B□ | 2 | 123 | 156 | 170 | 170 dia. | 190 | 115 | 165 | 163 | 122 | 103 | 12 | 53 |
| | 1/45 | R88G-HPG50A451K5B□ | 2 | 123 | 156 | 170 | 170 dia. | 190 | 115 | 165 | 163 | 122 | 103 | 12 | 53 |
| 1.5kW | 1/5 | R88G-HPG32A052K0B□ | 2 | 110 | 133 | 120 | 135 dia. | 135 | 115 | 115 | 114 | 84 | 98 | 12.5 | 35 |
| | 1/11 | R88G-HPG32A112K0B□ | 2 | 110 | 133 | 120 | 135 dia. | 135 | 115 | 115 | 114 | 84 | 98 | 12.5 | 35 |
| | 1/21 | R88G-HPG32A211K5B□ | 2 | 110 | 133 | 120 | 135 dia. | 135 | 115 | 115 | 114 | 84 | 98 | 12.5 | 35 |
| | 1/33 | R88G-HPG50A332K0B□ | 2 | 123 | 156 | 170 | 170 dia. | 190 | 115 | 165 | 163 | 122 | 103 | 12 | 53 |
| | 1/45 | R88G-HPG50A451K5B□ | 2 | 123 | 156 | 170 | 170 dia. | 190 | 115 | 165 | 163 | 122 | 103 | 12 | 53 |
| 2kW | 1/5 | R88G-HPG32A052K0B□ | 2 | 110 | 133 | 120 | 135 dia. | 135 | 115 | 115 | 114 | 84 | 98 | 12.5 | 35 |
| | 1/11 | R88G-HPG32A112K0B□ | 2 | 110 | 133 | 120 | 135 dia. | 135 | 115 | 115 | 114 | 84 | 98 | 12.5 | 35 |
| | 1/21 | R88G-HPG50A212K0B□ | 2 | 123 | 156 | 170 | 170 dia. | 190 | 115 | 165 | 163 | 122 | 103 | 12 | 53 |
| | 1/33 | R88G-HPG50A332K0B□ | 2 | 123 | 156 | 170 | 170 dia. | 190 | 115 | 165 | 163 | 122 | 103 | 12 | 53 |
| 3kW | 1/5 | R88G-HPG32A053K0B□ | 1 | 107 | 133 | 120 | 130 × 130 | 135 | 145 | 115 | 114 | 84 | 98 | 12.5 | 35 |
| | 1/11 | R88G-HPG50A113K0B□ | 2 | 123 | 156 | 170 | 170 dia. | 190 | 145 | 165 | 163 | 122 | 103 | 12 | 53 |
| | 1/21 | R88G-HPG50A213K0B□ | 2 | 123 | 156 | 170 | 170 dia. | 190 | 145 | 165 | 163 | 122 | 103 | 12 | 53 |
| 4kW | 1/5 | R88G-HPG32A054K0B□ | 1 | 129 | 133 | 120 | 130 × 130 | 135 | 145 | 115 | 114 | 84 | 98 | 12.5 | 35 |
| | 1/11 | R88G-HPG50A115K0B□ | 1 | 149 | 156 | 170 | 130 × 130 | 190 | 145 | 165 | 163 | 122 | 103 | 12 | 53 |
| 5kW | 1/5 | R88G-HPG50A055K0B□ | 1 | 149 | 156 | 170 | 130 × 130 | 190 | 145 | 165 | 163 | 122 | 103 | 12 | 53 |
| | 1/11 | R88G-HPG50A115K0B□ | 1 | 149 | 156 | 170 | 130 × 130 | 190 | 145 | 165 | 163 | 122 | 103 | 12 | 53 |

**Note: 1.** The standard models have a straight shaft.
**Note: 2.** To order a Decelerator with a straight shaft with key and tap, add "J" to the end of the model number, in the place indicated by the box. (e.g., R88G-HPG32A051K0BJ)
**Note: 3.** The diameter of the motor shaft insertion portion is the same as the diameter of the shaft of the corresponding motor.
**Note: 4.** Applicable for the servomotors with key, if the key is removed.
**Note: 5.** The dimensional drawings in this document are designed to indicate only the main dimensions. They do not necessarily represent the detailed shapes of the products.

### Outline Drawings 1

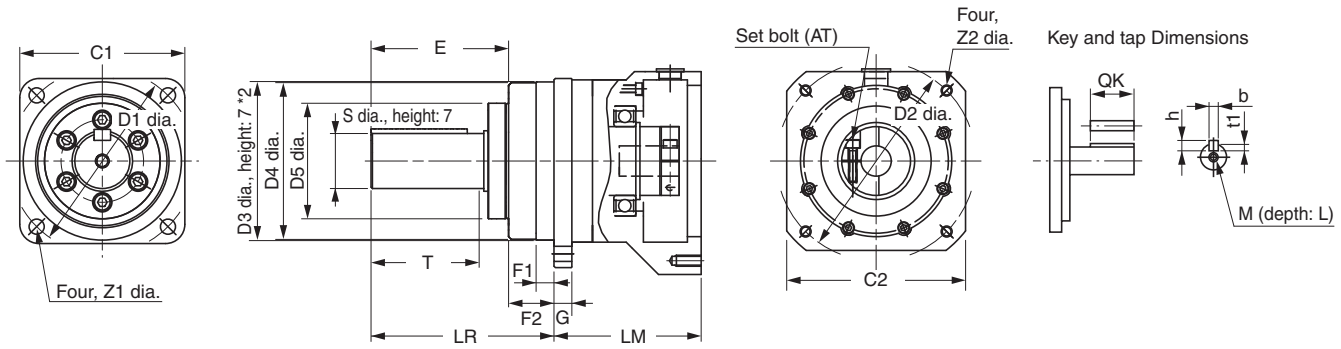


*2. The tolerance for the R88G-HPG50□ and R88G-HPG65□ is h8.

| Dimensions (mm) | | | | | | | | | | | | Model | | |
|---|---|---|---|---|---|---|---|---|---|---|---|---|---|---|
| G | S | T | Z1 | Z2 | AT*1 | Key Dimensions | | | | Tap Dimensions | | | | |
| | | | | | | QK | b | h | t1 | M | L | | | |
| 13 | 40 | 82 | 11 | M8 × 10 | M6 | 70 | 12 | 8 | 5 | M10 | 20 | R88G-HPG32A052K0B□ | 1/5 | 1kW |
| 13 | 40 | 82 | 11 | M8 × 10 | M6 | 70 | 12 | 8 | 5 | M10 | 20 | R88G-HPG32A112K0B□ | 1/11 | |
| 13 | 40 | 82 | 11 | M8 × 10 | M6 | 70 | 12 | 8 | 5 | M10 | 20 | R88G-HPG32A211K5B□ | 1/21 | |
| 16 | 50 | 82 | 14 | M8 × 10 | M6 | 70 | 14 | 9 | 5.5 | M10 | 20 | R88G-HPG50A332K0B□ | 1/33 | |
| 16 | 50 | 82 | 14 | M8 × 10 | M6 | 70 | 14 | 9 | 5.5 | M10 | 20 | R88G-HPG50A451K5B□ | 1/45 | |
| 13 | 40 | 82 | 11 | M8 × 10 | M6 | 70 | 12 | 8 | 5 | M10 | 20 | R88G-HPG32A052K0B□ | 1/5 | 1.5kW |
| 13 | 40 | 82 | 11 | M8 × 10 | M6 | 70 | 12 | 8 | 5 | M10 | 20 | R88G-HPG32A112K0B□ | 1/11 | |
| 13 | 40 | 82 | 11 | M8 × 10 | M6 | 70 | 12 | 8 | 5 | M10 | 20 | R88G-HPG32A211K5B□ | 1/21 | |
| 16 | 50 | 82 | 14 | M8 × 10 | M6 | 70 | 14 | 9 | 5.5 | M10 | 20 | R88G-HPG50A332K0B□ | 1/33 | |
| 16 | 50 | 82 | 14 | M8 × 10 | M6 | 70 | 14 | 9 | 5.5 | M10 | 20 | R88G-HPG50A451K5B□ | 1/45 | |
| 13 | 40 | 82 | 11 | M8 × 10 | M6 | 70 | 12 | 8 | 5 | M10 | 20 | R88G-HPG32A052K0B□ | 1/5 | 2kW |
| 13 | 40 | 82 | 11 | M8 × 10 | M6 | 70 | 12 | 8 | 5 | M10 | 20 | R88G-HPG32A112K0B□ | 1/11 | |
| 16 | 50 | 82 | 14 | M8 × 10 | M6 | 70 | 14 | 9 | 5.5 | M10 | 20 | R88G-HPG50A212K0B□ | 1/21 | |
| 16 | 50 | 82 | 14 | M8 × 10 | M6 | 70 | 14 | 9 | 5.5 | M10 | 20 | R88G-HPG50A332K0B□ | 1/33 | |
| 13 | 40 | 82 | 11 | M8 × 18 | M6 | 70 | 12 | 8 | 5 | M10 | 20 | R88G-HPG32A053K0B□ | 1/5 | 3kW |
| 16 | 50 | 82 | 14 | M8 × 16 | M6 | 70 | 14 | 9 | 5.5 | M10 | 20 | R88G-HPG50A113K0B□ | 1/11 | |
| 16 | 50 | 82 | 14 | M8 × 16 | M6 | 70 | 14 | 9 | 5.5 | M10 | 20 | R88G-HPG50A213K0B□ | 1/21 | |
| 13 | 40 | 82 | 11 | M8 × 25 | M6 | 70 | 12 | 8 | 5 | M10 | 20 | R88G-HPG32A054K0B□ | 1/5 | 4kW |
| 16 | 50 | 82 | 14 | M8 × 25 | M6 | 70 | 14 | 9 | 5.5 | M10 | 20 | R88G-HPG50A115K0B□ | 1/11 | |
| 16 | 50 | 82 | 14 | M8 × 25 | M6 | 70 | 14 | 9 | 5.5 | M10 | 20 | R88G-HPG50A055K0B□ | 1/5 | 5kW |
| 16 | 50 | 82 | 14 | M8 × 25 | M6 | 70 | 14 | 9 | 5.5 | M10 | 20 | R88G-HPG50A115K0B□ | 1/11 | |

*1. This is the set bolt.

## Outline Drawings 2

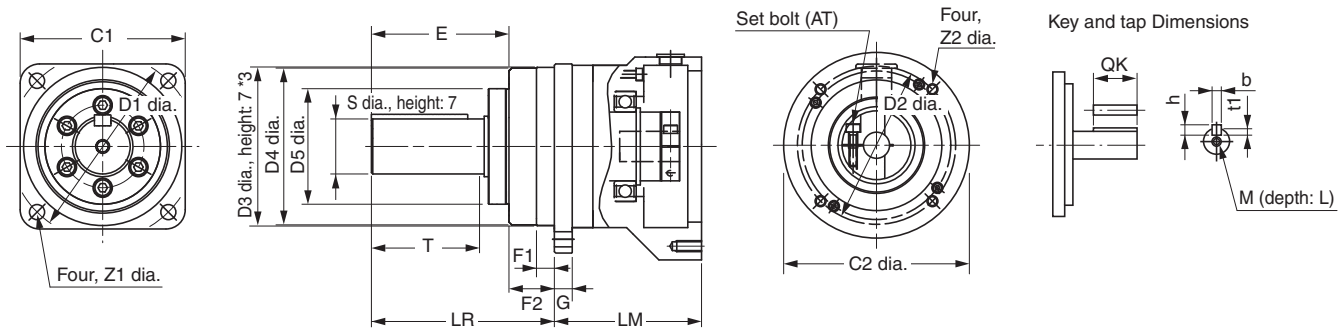


*3. The tolerance for the R88G-HPG50□ and R88G-HPG65□ is h8.

**Backlash: 3 Arcminutes Max.**

**<Flat Servomotors>**

### ● 3,000-r/min Servomotors (100 to 400 W)

| Model | | | Dimensions (mm) | | | | | | | | | | | |
|---|---|---|---|---|---|---|---|---|---|---|---|---|---|---|
| | | | LM | LR | C1 | C2 | D1 | D2 | D3 | D4 | D5 | E | F1 | F2 |
| 100 W | 1/5 | R88G-HPG11A05100PB | 39.5 | 42 | 40 | 60×60 | 46 | 70 | 40.0 | 39.5 | 29 | 27 | 2.2 | 15 |
| | 1/11 | R88G-HPG14A11100PB | 64.0 | 58 | 60 | 60×60 | 70 | 70 | 56.0 | 55.5 | 40 | 37 | 2.5 | 21 |
| | 1/21 | R88G-HPG14A21100PB | 64.0 | 58 | 60 | 60×60 | 70 | 70 | 56.0 | 55.5 | 40 | 37 | 2.5 | 21 |
| | 1/33 | R88G-HPG20A33100PB | 71.0 | 80 | 90 | 89 dia. | 105 | 70 | 85.0 | 84.0 | 59 | 53 | 7.5 | 27 |
| | 1/45 | R88G-HPG20A45100PB | 71.0 | 80 | 90 | 89 dia. | 105 | 70 | 85.0 | 84.0 | 59 | 53 | 7.5 | 27 |
| 200 W | 1/5 | R88G-HPG14A05200PB | 65.0 | 58 | 60 | 80×80 | 70 | 90 | 56.0 | 55.5 | 40 | 37 | 2.5 | 21 |
| | 1/11 | R88G-HPG20A11200PB | 78.0 | 80 | 90 | 80×80 | 105 | 90 | 85.0 | 84.0 | 59 | 53 | 7.5 | 27 |
| | 1/21 | R88G-HPG20A21200PB | 78.0 | 80 | 90 | 80×80 | 105 | 90 | 85.0 | 84.0 | 59 | 53 | 7.5 | 27 |
| | 1/33 | R88G-HPG20A33200PB | 78.0 | 80 | 90 | 80×80 | 105 | 90 | 85.0 | 84.0 | 59 | 53 | 7.5 | 27 |
| | 1/45 | R88G-HPG20A45200PB | 78.0 | 80 | 90 | 80×80 | 105 | 90 | 85.0 | 84.0 | 59 | 53 | 7.5 | 27 |
| 400 W | 1/5 | R88G-HPG20A05400PB | 78.0 | 80 | 90 | 80×80 | 105 | 90 | 85.0 | 84.0 | 59 | 53 | 7.5 | 27 |
| | 1/11 | R88G-HPG20A11400PB | 78.0 | 80 | 90 | 80×80 | 105 | 90 | 85.0 | 84.0 | 59 | 53 | 7.5 | 27 |
| | 1/21 | R88G-HPG20A21400PB | 78.0 | 80 | 90 | 80×80 | 105 | 90 | 85.0 | 84.0 | 59 | 53 | 7.5 | 27 |
| | 1/33 | R88G-HPG32A33400PB | 104.0 | 133 | 120 | 122 dia. | 135 | 90 | 115.0 | 114.0 | 84 | 98 | 12.5 | 35 |
| | 1/45 | R88G-HPG32A45400PB | 104.0 | 133 | 120 | 122 dia. | 135 | 90 | 115.0 | 114.0 | 84 | 98 | 12.5 | 35 |

**Note: 1.** The standard models have a straight shaft.
A model with a key and tap is indicated by adding “J” to the end of the model number.
**Note: 2.** Applicable for the servomotors with key, if the key is removed.

### Outline Drawings

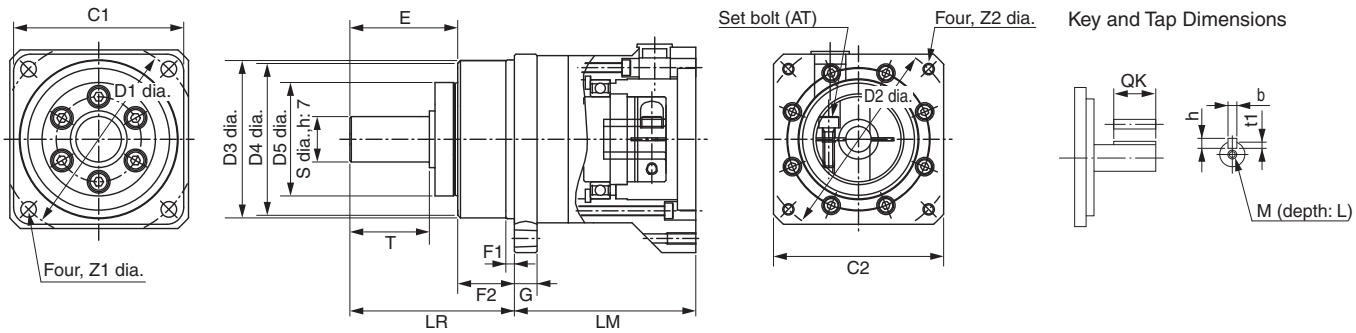

| | Dimensions (mm) | | | | | | | | | | | | Model | | |
|---|---|---|---|---|---|---|---|---|---|---|---|---|---|---|---|
| | G | S | T | Z1 | Z2 | AT*1 | Key dimensions | | | | Tap dimensions | | | | |
| | | | | | | | QK | b | h | t1 | M | L | | | |
| | 5 | 8 | 20 | 3.4 | M4×9 | M3 | 15 | 3 | 3 | 1.8 | M3 | 6 | **R88G-HPG11A05100PB** | 1/5 | 100 W |
| | 8 | 16 | 28 | 5.5 | M4×10 | M3 | 25 | 5 | 5 | 3.0 | M4 | 8 | **R88G-HPG14A11100PB** | 1/11 | |
| | 8 | 16 | 28 | 5.5 | M4×10 | M3 | 25 | 5 | 5 | 3.0 | M4 | 8 | **R88G-HPG14A21100PB** | 1/21 | |
| | 10 | 25 | 42 | 9.0 | M4×10 | M3 | 36 | 8 | 7 | 4.0 | M6 | 12 | **R88G-HPG20A33100PB** | 1/33 | |
| | 10 | 25 | 42 | 9.0 | M4×10 | M3 | 36 | 8 | 7 | 4.0 | M6 | 12 | **R88G-HPG20A45100PB** | 1/45 | |
| | 8 | 16 | 28 | 5.5 | M5×12 | M4 | 25 | 5 | 5 | 3.0 | M4 | 8 | **R88G-HPG14A05200PB** | 1/5 | 200 W |
| | 10 | 25 | 42 | 9.0 | M5×12 | M4 | 36 | 8 | 7 | 4.0 | M6 | 12 | **R88G-HPG20A11200PB** | 1/11 | |
| | 10 | 25 | 42 | 9.0 | M5×12 | M4 | 36 | 8 | 7 | 4.0 | M6 | 12 | **R88G-HPG20A21200PB** | 1/21 | |
| | 10 | 25 | 42 | 9.0 | M5×12 | M4 | 36 | 8 | 7 | 4.0 | M6 | 12 | **R88G-HPG20A33200PB** | 1/33 | |
| | 10 | 25 | 42 | 9.0 | M5×12 | M4 | 36 | 8 | 7 | 4.0 | M6 | 12 | **R88G-HPG20A45200PB** | 1/45 | |
| | 10 | 25 | 42 | 9.0 | M5×12 | M4 | 36 | 8 | 7 | 4.0 | M6 | 12 | **R88G-HPG20A05400PB** | 1/5 | 400 W |
| | 10 | 25 | 42 | 9.0 | M5×12 | M4 | 36 | 8 | 7 | 4.0 | M6 | 12 | **R88G-HPG20A11400PB** | 1/11 | |
| | 10 | 25 | 42 | 9.0 | M5×12 | M4 | 36 | 8 | 7 | 4.0 | M6 | 12 | **R88G-HPG20A21400PB** | 1/21 | |
| | 13 | 40 | 82 | 11.0 | M5×12 | M6 | 70 | 12 | 8 | 5.0 | M10 | 20 | **R88G-HPG32A33400PB** | 1/33 | |
| | 13 | 40 | 82 | 11.0 | M5×12 | M6 | 70 | 12 | 8 | 5.0 | M10 | 20 | **R88G-HPG32A45400PB** | 1/45 | |

*1. This is the set bolt.

**Backlash: 3 Arcminutes Max.**

**<Cylinder Type>**

### ● 2,000-r/min Servomotors (400 W to 5 kW)

| Model | | | Outline Drawings | Dimensions (mm) | | | | | | | | | | | |
|---|---|---|---|---|---|---|---|---|---|---|---|---|---|---|---|
| | | | | LM | LR | C1 | C2 | D1 | D2 | D3 | D4 | D5 | E | F1 | F2 |
| 1kW | 1/5 | R88G-HPG32A053K0B□ | 1 | 107 | 133 | 120 | 130 × 130 | 135 | 145 | 115 | 114 | 84 | 98 | 12.5 | 35 |
| | 1/11 | R88G-HPG32A112K0SB□ | 1 | 107 | 133 | 120 | 130 × 130 | 135 | 145 | 115 | 114 | 84 | 98 | 12.5 | 35 |
| | 1/21 | R88G-HPG32A211K0SB□ | 1 | 107 | 133 | 120 | 130 × 130 | 135 | 145 | 115 | 114 | 84 | 98 | 12.5 | 35 |
| | 1/33 | R88G-HPG50A332K0SB□ | 2 | 123 | 156 | 170 | 170 dia. | 190 | 145 | 165 | 163 | 122 | 103 | 12 | 53 |
| | 1/45 | R88G-HPG50A451K0SB□ | 2 | 123 | 156 | 170 | 170 dia. | 190 | 145 | 165 | 163 | 122 | 103 | 12 | 53 |
| 1.5kW | 1/5 | R88G-HPG32A053K0B□ | 1 | 107 | 133 | 120 | 130 × 130 | 135 | 145 | 115 | 114 | 84 | 98 | 12.5 | 35 |
| | 1/11 | R88G-HPG32A112K0SB□ | 1 | 107 | 133 | 120 | 130 × 130 | 135 | 145 | 115 | 114 | 84 | 98 | 12.5 | 35 |
| | 1/21 | R88G-HPG50A213K0B□ | 2 | 123 | 156 | 170 | 170 dia. | 190 | 145 | 165 | 163 | 122 | 103 | 12 | 53 |
| | 1/33 | R88G-HPG50A332K0SB□ | 2 | 123 | 156 | 170 | 170 dia. | 190 | 145 | 165 | 163 | 122 | 103 | 12 | 53 |
| 2kW | 1/5 | R88G-HPG32A053K0B□ | 1 | 107 | 133 | 120 | 130 × 130 | 135 | 145 | 115 | 114 | 84 | 98 | 12.5 | 35 |
| | 1/11 | R88G-HPG32A112K0SB□ | 1 | 107 | 133 | 120 | 130 × 130 | 135 | 145 | 115 | 114 | 84 | 98 | 12.5 | 35 |
| | 1/21 | R88G-HPG50A213K0B□ | 2 | 123 | 156 | 170 | 170 dia. | 190 | 145 | 165 | 163 | 122 | 103 | 12 | 53 |
| | 1/33 | R88G-HPG50A332K0SB□ | 2 | 123 | 156 | 170 | 170 dia. | 190 | 145 | 165 | 163 | 122 | 103 | 12 | 53 |
| 3kW | 1/5 | R88G-HPG32A054K0B□ | 1 | 129 | 133 | 120 | 130 × 130 | 135 | 145 | 115 | 114 | 84 | 98 | 12.5 | 35 |
| | 1/11 | R88G-HPG50A115K0B□ | 1 | 149 | 156 | 170 | 130 × 130 | 190 | 145 | 165 | 163 | 122 | 103 | 12 | 53 |
| | 1/21 | R88G-HPG50A213K0SB□ | 1 | 149 | 156 | 170 | 130 × 130 | 190 | 145 | 165 | 163 | 122 | 103 | 12 | 53 |
| | 1/25 | R88G-HPG65A253K0SB□ | 1 | 231 | 222 | 230 | 130 × 130 | 260 | 145 | 220 | 214 | 168 | 165 | 12 | 57 |
| 4kW | 1/5 | R88G-HPG50A055K0SB□ | 1 | 149 | 156 | 170 | 180 × 180 | 190 | 200 | 165 | 163 | 122 | 103 | 12 | 53 |
| | 1/11 | R88G-HPG50A115K0SB□ | 1 | 149 | 156 | 170 | 180 × 180 | 190 | 200 | 165 | 163 | 122 | 103 | 12 | 53 |
| | 1/20 | R88G-HPG65A205K0SB□ | 1 | 231 | 222 | 230 | 180 × 180 | 260 | 200 | 220 | 214 | 168 | 165 | 12 | 57 |
| | 1/25 | R88G-HPG65A255K0SB□ | 1 | 231 | 222 | 230 | 180 × 180 | 260 | 200 | 220 | 214 | 168 | 165 | 12 | 57 |
| 5kW | 1/5 | R88G-HPG50A055K0SB□ | 1 | 149 | 156 | 170 | 180 × 180 | 190 | 200 | 165 | 163 | 122 | 103 | 12 | 53 |
| | 1/11 | R88G-HPG50A115K0SB□ | 1 | 149 | 156 | 170 | 180 × 180 | 190 | 200 | 165 | 163 | 122 | 103 | 12 | 53 |
| | 1/20 | R88G-HPG65A205K0SB□ | 1 | 231 | 222 | 230 | 180 × 180 | 260 | 200 | 220 | 214 | 168 | 165 | 12 | 57 |
| | 1/25 | R88G-HPG65A255K0SB□ | 1 | 231 | 222 | 230 | 180 × 180 | 260 | 200 | 220 | 214 | 168 | 165 | 12 | 57 |
| 7.5kW | 1/5 | R88G-HPG65A057K5SB□ | 1 | 184.5 | 222 | 230 | 180 × 180 | 260 | 200 | 220 | 214 | 168 | 165 | 12.0 | 57 |
| | 1/12 | R88G-HPG65A127K5SB□ | 1 | 254.5 | 222 | 230 | 180 × 180 | 260 | 200 | 220 | 214 | 168 | 165 | 12.0 | 57 |

**Note: 1.** The standard models have a straight shaft.
**Note: 2.** To order a Decelerator with a straight shaft with key and tap, add "J" to the end of the model number, in the place indicated by the box. (e.g., R88G-HPG32A053K0BJ)
**Note: 3.** The diameter of the motor shaft insertion portion is the same as the diameter of the shaft of the corresponding motor.
**Note: 4.** Applicable for the servomotors with key, if the key is removed.
**Note: 5.** The dimensional drawings in this document are designed to indicate only the main dimensions. They do not necessarily represent the detailed shapes of the products.

### Outline Drawings 1

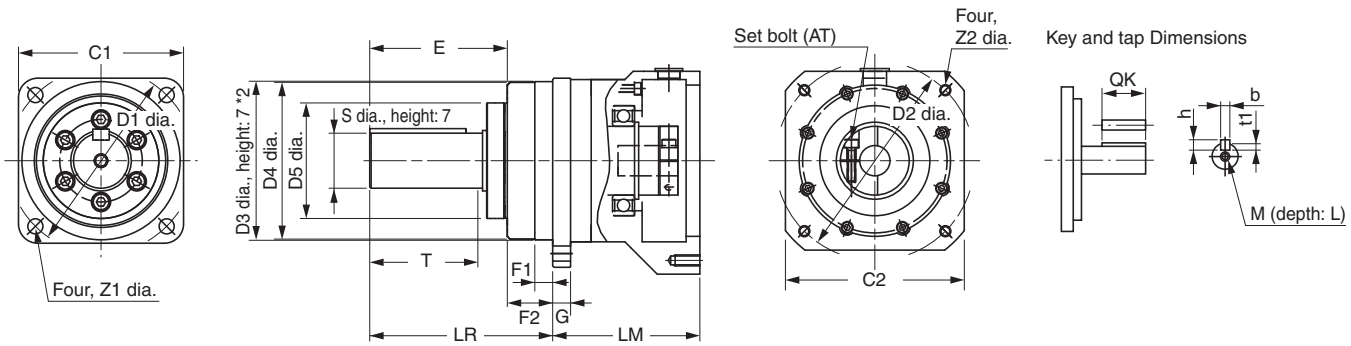


*2. The tolerance for the R88G-HPG50□ and R88G-HPG65□ is h8.

| Dimensions (mm) | | | | | | | | | | | | Model | | |
|---|---|---|---|---|---|---|---|---|---|---|---|---|---|---|
| G | S | T | Z1 | Z2 | AT*1 | Key Dimensions | | | | Tap Dimensions | | | | |
| | | | | | | QK | b | h | t1 | M | L | | | |
| 13 | 40 | 82 | 11 | M8 × 18 | M6 | 70 | 12 | 8 | 5 | M10 | 20 | R88G-HPG32A053K0B□ | 1/5 | 1kW |
| 13 | 40 | 82 | 11 | M8 × 18 | M6 | 70 | 12 | 8 | 5 | M10 | 20 | R88G-HPG32A112K0SB□ | 1/11 | |
| 13 | 40 | 82 | 11 | M8 × 18 | M6 | 70 | 12 | 8 | 5 | M10 | 20 | R88G-HPG32A211K0SB□ | 1/21 | |
| 16 | 50 | 82 | 14 | M8 × 16 | M6 | 70 | 14 | 9 | 5.5 | M10 | 20 | R88G-HPG50A332K0SB□ | 1/33 | |
| 16 | 50 | 82 | 14 | M8 × 16 | M6 | 70 | 14 | 9 | 5.5 | M10 | 20 | R88G-HPG50A451K0SB□ | 1/45 | |
| 13 | 40 | 82 | 11 | M8 × 18 | M6 | 70 | 12 | 8 | 5 | M10 | 20 | R88G-HPG32A053K0B□ | 1/5 | 1.5kW |
| 13 | 40 | 82 | 11 | M8 × 18 | M6 | 70 | 12 | 8 | 5 | M10 | 20 | R88G-HPG32A112K0SB□ | 1/11 | |
| 16 | 50 | 82 | 14 | M8 × 16 | M6 | 70 | 14 | 9 | 5.5 | M10 | 20 | R88G-HPG50A213K0B□ | 1/21 | |
| 16 | 50 | 82 | 14 | M8Å~16 | M6 | 70 | 14 | 9 | 5.5 | M10 | 20 | R88G-HPG50A332K0SB□ | 1/33 | |
| 13 | 40 | 82 | 11 | M8 × 18 | M6 | 70 | 12 | 8 | 5 | M10 | 20 | R88G-HPG32A053K0B□ | 1/5 | 2kW |
| 13 | 40 | 82 | 11 | M8 × 18 | M6 | 70 | 12 | 8 | 5 | M10 | 20 | R88G-HPG32A112K0SB□ | 1/11 | |
| 16 | 50 | 82 | 14 | M8 × 16 | M6 | 70 | 14 | 9 | 5.5 | M10 | 20 | R88G-HPG50A213K0B□ | 1/21 | |
| 16 | 50 | 82 | 14 | M8 × 16 | M6 | 70 | 14 | 9 | 5.5 | M10 | 20 | R88G-HPG50A332K0SB□ | 1/33 | |
| 13 | 40 | 82 | 11 | M8 × 25 | M6 | 70 | 12 | 8 | 5 | M10 | 20 | R88G-HPG32A054K0B□ | 1/5 | 3kW |
| 16 | 50 | 82 | 14 | M8 × 25 | M6 | 70 | 14 | 9 | 5.5 | M10 | 20 | R88G-HPG50A115K0B□ | 1/11 | |
| 16 | 50 | 82 | 14 | M8 × 25 | M6 | 70 | 14 | 9 | 5.5 | M10 | 20 | R88G-HPG50A213K0SB□ | 1/21 | |
| 25 | 80 | 130 | 18 | M8 × 25 | M8 | 110 | 22 | 14 | 9 | M16 | 35 | R88G-HPG65A253K0SB□ | 1/25 | |
| 16 | 50 | 82 | 14 | M12 × 25 | M6 | 70 | 14 | 9 | 5.5 | M10 | 20 | R88G-HPG50A055K0SB□ | 1/5 | 4kW |
| 16 | 50 | 82 | 14 | M12 × 25 | M6 | 70 | 14 | 9 | 5.5 | M10 | 20 | R88G-HPG50A115K0SB□ | 1/11 | |
| 25 | 80 | 130 | 18 | M12 × 25 | M8 | 110 | 22 | 14 | 9 | M16 | 35 | R88G-HPG65A205K0SB□ | 1/20 | |
| 25 | 80 | 130 | 18 | M12 × 25 | M8 | 110 | 22 | 14 | 9 | M16 | 35 | R88G-HPG65A255K0SB□ | 1/25 | |
| 16 | 50 | 82 | 14 | M12 × 25 | M6 | 70 | 14 | 9 | 5.5 | M10 | 20 | R88G-HPG50A055K0SB□ | 1/5 | 5kW |
| 16 | 50 | 82 | 14 | M12 × 25 | M6 | 70 | 14 | 9 | 5.5 | M10 | 20 | R88G-HPG50A115K0SB□ | 1/11 | |
| 25 | 80 | 130 | 18 | M12 × 25 | M8 | 110 | 22 | 14 | 9 | M16 | 35 | R88G-HPG65A205K0SB□ | 1/20 | |
| 25 | 80 | 130 | 18 | M12 × 25 | M8 | 110 | 22 | 14 | 9 | M16 | 35 | R88G-HPG65A255K0SB□ | 1/25 | |
| 25 | 80 | 130 | 18 | M12 × 25 | M8 | 110 | 22 | 14 | 9.0 | M16 | 35 | R88G-HPG65A057K5SB□ | 1/5 | 7.5kW |
| 25 | 80 | 130 | 18 | M12 × 25 | M8 | 110 | 22 | 14 | 9.0 | M16 | 35 | R88G-HPG65A127K5SB□ | 1/12 | |

*1. This is the set bolt.

## Outline Drawings 2

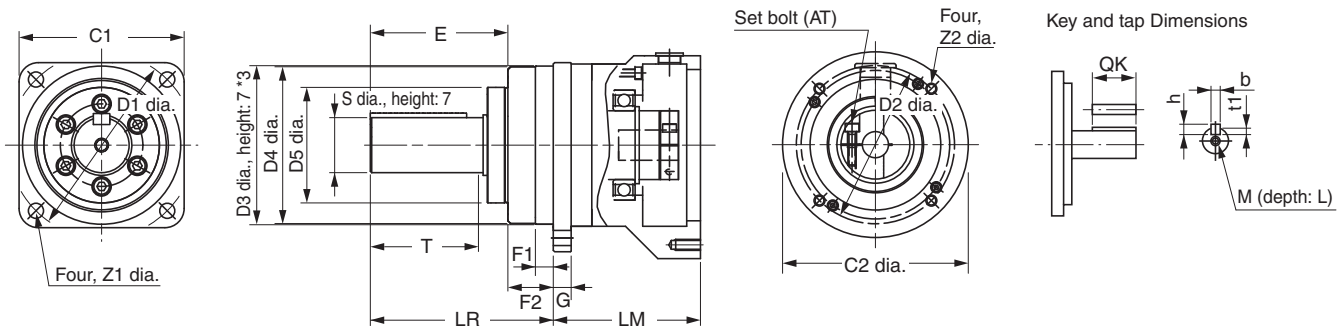


*3. The tolerance for the R88G-HPG50□ and R88G-HPG65□ is h8.

**Backlash: 3 Arcminutes Max.**

**<Cylinder Type>**

### ● 1,000-r/min Servomotors (900 W to 6 kW)

| Model | | | Outline Drawings | Dimensions (mm) | | | | | | | | | | | |
|---|---|---|---|---|---|---|---|---|---|---|---|---|---|---|---|
| | | | | LM | LR | C1 | C2 | D1 | D2 | D3 | D4 | D5 | E | F1 | F2 |
| 900W | 1/5 | **R88G-HPG32A05900TB□** | 1 | 129 | 133 | 120 | 130 × 130 | 135 | 145 | 115 | 114 | 84 | 98 | 12.5 | 35 |
| | 1/11 | **R88G-HPG32A11900TB□** | 1 | 129 | 133 | 120 | 130 × 130 | 135 | 145 | 115 | 114 | 84 | 98 | 12.5 | 35 |
| | 1/21 | **R88G-HPG50A21900TB□** | 1 | 149 | 156 | 170 | 130 × 130 | 190 | 145 | 165 | 163 | 122 | 103 | 12 | 53 |
| | 1/33 | **R88G-HPG50A33900TB□** | 1 | 149 | 156 | 170 | 130 × 130 | 190 | 145 | 165 | 163 | 122 | 103 | 12 | 53 |
| 2kW | 1/5 | **R88G-HPG32A052K0TB□** | 1 | 129 | 133 | 120 | 180 × 180 | 135 | 200 | 115 | 114 | 84 | 98 | 12.5 | 35 |
| | 1/11 | **R88G-HPG50A112K0TB□** | 1 | 149 | 156 | 170 | 180 × 180 | 190 | 200 | 165 | 163 | 122 | 103 | 12 | 53 |
| | 1/21 | **R88G-HPG50A212K0TB□** | 1 | 231 | 222 | 230 | 180 × 180 | 260 | 200 | 220 | 214 | 168 | 165 | 12 | 53 |
| | 1/25 | **R88G-HPG65A255K0SB□** | 1 | 231 | 222 | 230 | 180 × 180 | 260 | 200 | 220 | 214 | 168 | 165 | 12 | 57 |
| 3kW | 1/5 | **R88G-HPG50A055K0SB□** | 1 | 149 | 156 | 170 | 180 × 180 | 190 | 200 | 165 | 163 | 122 | 103 | 12 | 53 |
| | 1/11 | **R88G-HPG50A115K0SB□** | 1 | 149 | 156 | 170 | 180 × 180 | 190 | 200 | 165 | 163 | 122 | 103 | 12 | 53 |
| | 1/20 | **R88G-HPG65A205K0SB□** | 1 | 231 | 222 | 230 | 180 × 180 | 260 | 200 | 220 | 214 | 168 | 165 | 12 | 57 |
| | 1/25 | **R88G-HPG65A255K0SB□** | 1 | 231 | 222 | 230 | 180 × 180 | 260 | 200 | 220 | 214 | 168 | 165 | 12 | 57 |
| 4.5kW | 1/5 | **R88G-HPG50A054K5TB□** | 1 | 149 | 156 | 170 | 180 × 180 | 190 | 200 | 165 | 163 | 122 | 103 | 12.0 | 53 |
| | 1/12 | **R88G-HPG65A127K5SB□** | 1 | 254.5 | 222 | 230 | 180 × 180 | 260 | 200 | 220 | 214 | 168 | 165 | 12.0 | 57 |
| | 1/20 | **R88G-HPG65A204K5TB□** | 1 | 254.5 | 222 | 230 | 180 × 180 | 260 | 200 | 220 | 214 | 168 | 165 | 12.0 | 57 |
| 6kW | 1/5 | **R88G-HPG65A057K5SB□** | 1 | 184.5 | 222 | 230 | 180 × 180 | 260 | 200 | 220 | 214 | 168 | 165 | 12.0 | 57 |
| | 1/12 | **R88G-HPG65A127K5SB□** | 1 | 254.5 | 222 | 230 | 180 × 180 | 260 | 200 | 220 | 214 | 168 | 165 | 12.0 | 57 |

**Note: 1.** The standard models have a straight shaft.
**Note: 2.** To order a Decelerator with a straight shaft with key and tap, add "J" to the end of the model number, in the place indicated by the box. (e.g., R88G-HPG32A05900TBJ)
**Note: 3.** The diameter of the motor shaft insertion portion is the same as the diameter of the shaft of the corresponding motor.
**Note: 4.** Applicable for the servomotors with key, if the key is removed.
**Note: 5.** The dimensional drawings in this document are designed to indicate only the main dimensions. They do not necessarily represent the detailed shapes of the products.

### Outline Drawings 1

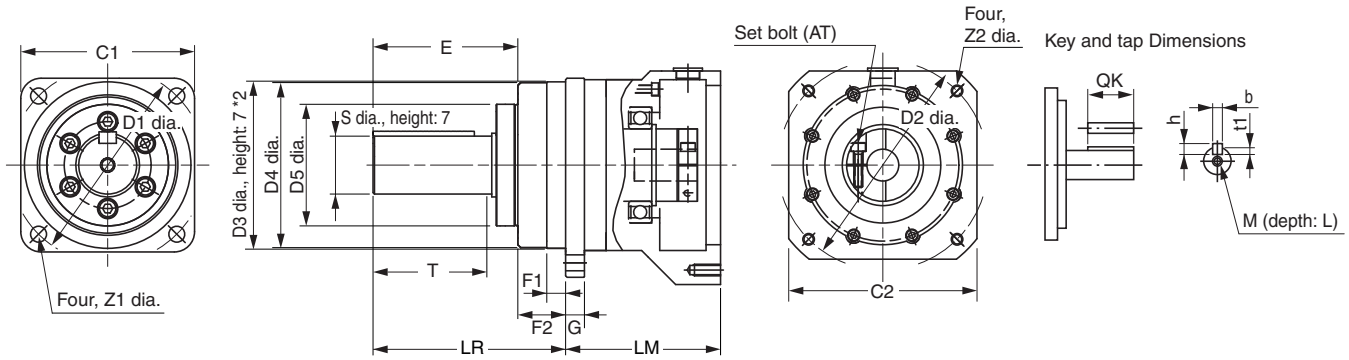


*2. The tolerance for the R88G-HPG50□ and R88G-HPG65□ is h8.

| Dimensions (mm) | | | | | | | | | | | | Model | | |
|---|---|---|---|---|---|---|---|---|---|---|---|---|---|---|
| G | S | T | Z1 | Z2 | AT*1 | Key Dimensions | | | | Tap Dimensions | | | | |
| | | | | | | QK | b | h | t1 | M | L | | | |
| 13 | 40 | 82 | 11 | M8 × 25 | M6 | 70 | 12 | 8 | 5 | M10 | 20 | **R88G-HPG32A05900TB□** | 1/5 | 900W |
| 13 | 40 | 82 | 11 | M8 × 25 | M6 | 70 | 12 | 8 | 5 | M10 | 20 | **R88G-HPG32A11900TB□** | 1/11 | |
| 16 | 50 | 82 | 14 | M8 × 25 | M6 | 70 | 14 | 9 | 5.5 | M10 | 20 | **R88G-HPG50A21900TB□** | 1/21 | |
| 16 | 50 | 82 | 14 | M8 × 25 | M6 | 70 | 14 | 9 | 5.5 | M10 | 20 | **R88G-HPG50A33900TB□** | 1/33 | |
| 13 | 40 | 82 | 11 | M12 × 25 | M6 | 70 | 12 | 8 | 5 | M10 | 20 | **R88G-HPG32A052K0TB□** | 1/5 | 2kW |
| 16 | 50 | 82 | 14 | M12 × 25 | M6 | 70 | 14 | 9 | 5.5 | M10 | 20 | **R88G-HPG50A112K0TB□** | 1/11 | |
| 25 | 80 | 130 | 18 | M12 × 25 | M8 | 110 | 22 | 14 | 9 | M16 | 35 | **R88G-HPG50A212K0TB□** | 1/21 | |
| 25 | 80 | 130 | 18 | M12 × 25 | M8 | 110 | 22 | 14 | 9 | M16 | 35 | **R88G-HPG65A255K0SB□** | 1/25 | |
| 16 | 50 | 82 | 14 | M12 × 25 | M6 | 70 | 14 | 9 | 5.5 | M10 | 20 | **R88G-HPG50A055K0SB□** | 1/5 | 3kW |
| 16 | 50 | 82 | 14 | M12 × 25 | M6 | 70 | 14 | 9 | 5.5 | M10 | 20 | **R88G-HPG50A115K0SB□** | 1/11 | |
| 25 | 80 | 130 | 18 | M12 × 25 | M8 | 110 | 22 | 14 | 9 | M16 | 35 | **R88G-HPG65A205K0SB□** | 1/20 | |
| 25 | 80 | 130 | 18 | M12 × 25 | M8 | 110 | 22 | 14 | 9 | M16 | 35 | **R88G-HPG65A255K0SB□** | 1/25 | |
| 16 | 50 | 82 | 14 | M12 × 25 | M6 | 70 | 14 | 9 | 5.5 | M10 | 20 | **R88G-HPG50A054K5TB□** | 1/5 | 4.5kW |
| 25 | 80 | 130 | 18 | M12 × 25 | M8 | 110 | 22 | 14 | 9 | M16 | 35 | **R88G-HPG65A127K5SB□** | 1/12 | |
| 25 | 80 | 130 | 18 | M12 × 25 | M8 | 110 | 22 | 14 | 9 | M16 | 35 | **R88G-HPG65A204K5TB□** | 1/20 | |
| 25 | 80 | 130 | 18 | M12 × 25 | M8 | 110 | 22 | 14 | 9 | M16 | 35 | **R88G-HPG65A057K5SB□** | 1/5 | 6kW |
| 25 | 80 | 130 | 18 | M12 × 25 | M8 | 110 | 22 | 14 | 9 | M16 | 35 | **R88G-HPG65A127K5SB□** | 1/12 | |

*1. This is the set bolt.

**Backlash: 15 Arcminutes Max.**

**<Cylinder Type>**

**● 3,000-r/min Servomotors (50 to 750 W)**

| Model | | | Dimensions (mm) | | | | | | | | | | |
|---|---|---|---|---|---|---|---|---|---|---|---|---|---|
| | | | LM | LR | C1 | C2 | D1 | D2 | D3 | D4 | E3 | F | G |
| 50 W | 1/5 | **R88G-VRSF05B100CJ** | 67.5 | 32 | 52 | 40 | 46 | 60 | 50 | 45 | 10 | 3 | 6 |
| | 1/9 | **R88G-VRSF09B100CJ** | 67.5 | 32 | 52 | 40 | 46 | 60 | 50 | 45 | 10 | 3 | 6 |
| | 1/15 | **R88G-VRSF15B100CJ** | 78.0 | 32 | 52 | 40 | 46 | 60 | 50 | 45 | 10 | 3 | 6 |
| | 1/25 | **R88G-VRSF25B050CJ** | 78.0 | 32 | 52 | 40 | 46 | 60 | 50 | 45 | 10 | 3 | 6 |
| 100 W | 1/5 | **R88G-VRSF05B100CJ** | 67.5 | 32 | 52 | 40 | 46 | 60 | 50 | 45 | 10 | 3 | 6 |
| | 1/9 | **R88G-VRSF09B100CJ** | 67.5 | 32 | 52 | 40 | 46 | 60 | 50 | 45 | 10 | 3 | 6 |
| | 1/15 | **R88G-VRSF15B100CJ** | 78.0 | 32 | 52 | 40 | 46 | 60 | 50 | 45 | 10 | 3 | 6 |
| | 1/25 | **R88G-VRSF25B100CJ** | 78.0 | 32 | 52 | 40 | 46 | 60 | 50 | 45 | 10 | 3 | 6 |
| 200 W | 1/5 | **R88G-VRSF05B200CJ** | 72.5 | 32 | 52 | 60 | 70 | 60 | 50 | 45 | 10 | 3 | 10 |
| | 1/9 | **R88G-VRSF09C200CJ** | 89.5 | 50 | 78 | 60 | 70 | 90 | 70 | 62 | 17 | 3 | 8 |
| | 1/15 | **R88G-VRSF15C200CJ** | 100.0 | 50 | 78 | 60 | 70 | 90 | 70 | 62 | 17 | 3 | 8 |
| | 1/25 | **R88G-VRSF25C200CJ** | 100.0 | 50 | 78 | 60 | 70 | 90 | 70 | 62 | 17 | 3 | 8 |
| 400 W | 1/5 | **R88G-VRSF05C400CJ** | 89.5 | 50 | 78 | 60 | 70 | 90 | 70 | 62 | 17 | 3 | 8 |
| | 1/9 | **R88G-VRSF09C400CJ** | 89.5 | 50 | 78 | 60 | 70 | 90 | 70 | 62 | 17 | 3 | 8 |
| | 1/15 | **R88G-VRSF15C400CJ** | 100.0 | 50 | 78 | 60 | 70 | 90 | 70 | 62 | 17 | 3 | 8 |
| | 1/25 | **R88G-VRSF25C400CJ** | 100.0 | 50 | 78 | 60 | 70 | 90 | 70 | 62 | 17 | 3 | 8 |
| 750 W | 1/5 | **R88G-VRSF05C750CJ** | 93.5 | 50 | 78 | 80 | 90 | 90 | 70 | 62 | 17 | 3 | 10 |
| | 1/9 | **R88G-VRSF09D750CJ** | 97.5 | 61 | 98 | 80 | 90 | 115 | 90 | 75 | 18 | 5 | 10 |
| | 1/15 | **R88G-VRSF15D750CJ** | 110.0 | 61 | 98 | 80 | 90 | 115 | 90 | 75 | 18 | 5 | 10 |
| | 1/25 | **R88G-VRSF25D750CJ** | 110.0 | 61 | 98 | 80 | 90 | 115 | 90 | 75 | 18 | 5 | 10 |

**Note: 1.** The standard models have a straight shaft with a key.
**Note: 2.** The diameter of the motor shaft insertion portion is the same as the diameter of the shaft of the corresponding motor.
**Note: 3.** Applicable for the servomotors with key, if the key is removed.

## Outline Drawings

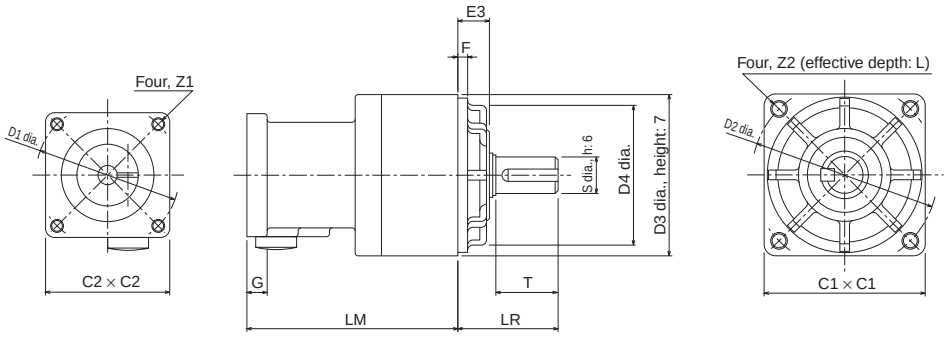

| | Dimensions (mm) | | | | | | | | | | Model | | |
|---|---|---|---|---|---|---|---|---|---|---|---|---|---|
| | S | T | Z1 | Z2 | AT | L | Key dimensions | | | | | | |
| | | | | | | | QK | b | h | t1 | | | |
| | 12 | 20 | M4 | M5 | M3 | 12 | 16 | 4 | 4 | 2.5 | **R88G-VRSF05B100CJ** | 1/5 | 50 W |
| | 12 | 20 | M4 | M5 | M3 | 12 | 16 | 4 | 4 | 2.5 | **R88G-VRSF09B100CJ** | 1/9 | |
| | 12 | 20 | M4 | M5 | M3 | 12 | 16 | 4 | 4 | 2.5 | **R88G-VRSF15B100CJ** | 1/15 | |
| | 12 | 20 | M4 | M5 | M3 | 12 | 16 | 4 | 4 | 2.5 | **R88G-VRSF25B050CJ** | 1/25 | |
| | 12 | 20 | M4 | M5 | M3 | 12 | 16 | 4 | 4 | 2.5 | **R88G-VRSF05B100CJ** | 1/5 | 100 W |
| | 12 | 20 | M4 | M5 | M3 | 12 | 16 | 4 | 4 | 2.5 | **R88G-VRSF09B100CJ** | 1/9 | |
| | 12 | 20 | M4 | M5 | M3 | 12 | 16 | 4 | 4 | 2.5 | **R88G-VRSF15B100CJ** | 1/15 | |
| | 12 | 20 | M4 | M5 | M3 | 12 | 16 | 4 | 4 | 2.5 | **R88G-VRSF25B100CJ** | 1/25 | |
| | 12 | 20 | M5 | M5 | M4 | 12 | 16 | 4 | 4 | 2.5 | **R88G-VRSF05B200CJ** | 1/5 | 200 W |
| | 19 | 30 | M5 | M6 | M4 | 20 | 22 | 6 | 6 | 3.5 | **R88G-VRSF09C200CJ** | 1/9 | |
| | 19 | 30 | M5 | M6 | M4 | 20 | 22 | 6 | 6 | 3.5 | **R88G-VRSF15C200CJ** | 1/15 | |
| | 19 | 30 | M5 | M6 | M4 | 20 | 22 | 6 | 6 | 3.5 | **R88G-VRSF25C200CJ** | 1/25 | |
| | 19 | 30 | M5 | M6 | M4 | 20 | 22 | 6 | 6 | 3.5 | **R88G-VRSF05C400CJ** | 1/5 | 400 W |
| | 19 | 30 | M5 | M6 | M4 | 20 | 22 | 6 | 6 | 3.5 | **R88G-VRSF09C400CJ** | 1/9 | |
| | 19 | 30 | M5 | M6 | M4 | 20 | 22 | 6 | 6 | 3.5 | **R88G-VRSF15C400CJ** | 1/15 | |
| | 19 | 30 | M5 | M6 | M4 | 20 | 22 | 6 | 6 | 3.5 | **R88G-VRSF25C400CJ** | 1/25 | |
| | 19 | 30 | M5 | M6 | M4 | 20 | 22 | 6 | 6 | 3.5 | **R88G-VRSF05C750CJ** | 1/5 | 750 W |
| | 24 | 40 | M5 | M8 | M4 | 20 | 30 | 8 | 7 | 4 | **R88G-VRSF09D750CJ** | 1/9 | |
| | 24 | 40 | M5 | M8 | M4 | 20 | 30 | 8 | 7 | 4 | **R88G-VRSF15D750CJ** | 1/15 | |
| | 24 | 40 | M5 | M8 | M4 | 20 | 30 | 8 | 7 | 4 | **R88G-VRSF25D750CJ** | 1/25 | |

## Outline Drawings

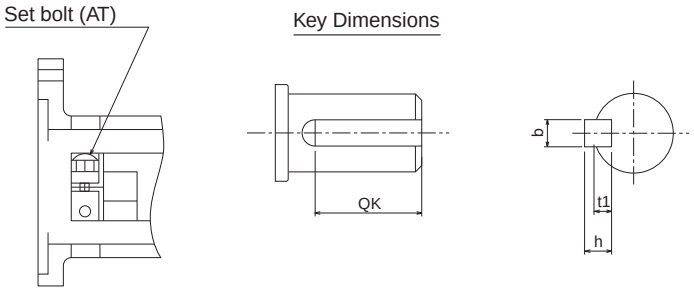

**Backlash: 15 Arcminutes Max.**

**<Flat Servomotors>**

### ● 3,000-r/min Servomotors (100 to 400 W)

| Model | | | Dimensions (mm) | | | | | | | | | | |
|---|---|---|---|---|---|---|---|---|---|---|---|---|---|
| | | | LM | LR | C1 | C2 | D1 | D2 | D3 | D4 | E3 | F | G |
| 100 W | 1/5 | **R88G-VRSF05B100PCJ** | 67.5 | 32 | 52 | 60 | 70 | 60 | 50 | 45 | 10 | 3 | 8 |
| | 1/9 | **R88G-VRSF09B100PCJ** | 67.5 | 32 | 52 | 60 | 70 | 60 | 50 | 45 | 10 | 3 | 8 |
| | 1/15 | **R88G-VRSF15B100PCJ** | 78.0 | 32 | 52 | 60 | 70 | 60 | 50 | 45 | 10 | 3 | 8 |
| | 1/25 | **R88G-VRSF25B100PCJ** | 78.0 | 32 | 52 | 60 | 70 | 60 | 50 | 45 | 10 | 3 | 8 |
| 200 W | 1/5 | **R88G-VRSF05B200PCJ** | 72.5 | 32 | 52 | 80 | 90 | 60 | 50 | 45 | 10 | 3 | 12 |
| | 1/9 | **R88G-VRSF09C200PCJ** | 89.5 | 50 | 78 | 80 | 90 | 90 | 70 | 62 | 17 | 3 | 12 |
| | 1/15 | **R88G-VRSF15C200PCJ** | 100.0 | 50 | 78 | 80 | 90 | 90 | 70 | 62 | 17 | 3 | 12 |
| | 1/25 | **R88G-VRSF25C200PCJ** | 100.0 | 50 | 78 | 80 | 90 | 90 | 70 | 62 | 17 | 3 | 12 |
| 400 W | 1/5 | **R88G-VRSF05C400PCJ** | 89.5 | 50 | 78 | 80 | 90 | 90 | 70 | 62 | 17 | 3 | 12 |
| | 1/9 | **R88G-VRSF09C400PCJ** | 89.5 | 50 | 78 | 80 | 90 | 90 | 70 | 62 | 17 | 3 | 12 |
| | 1/15 | **R88G-VRSF15C400PCJ** | 100.0 | 50 | 78 | 80 | 90 | 90 | 70 | 62 | 17 | 3 | 12 |
| | 1/25 | **R88G-VRSF25C400PCJ** | 100.0 | 50 | 78 | 80 | 90 | 90 | 70 | 62 | 17 | 3 | 12 |

**Note: 1.** The standard models have a straight shaft with a key.
**Note: 2.** The diameter of the motor shaft insertion portion is the same as the diameter of the shaft of the corresponding motor.
**Note: 3.** Applicable for the servomotors with key, if the key is removed.

### Outline Drawings

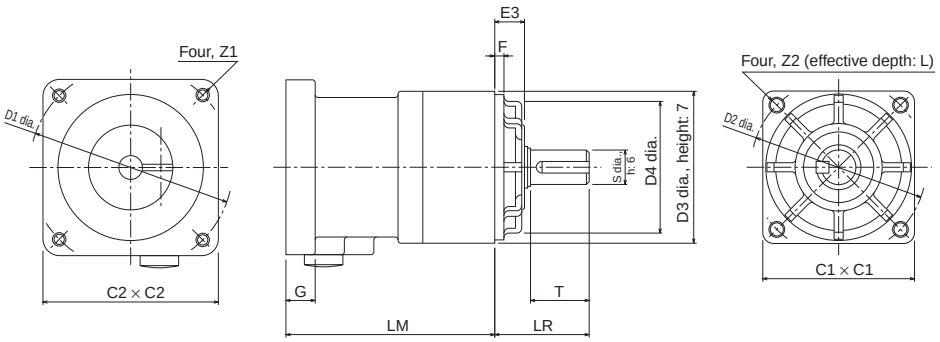

| | Dimensions (mm) | | | | | | | | | | Model | | |
|---|---|---|---|---|---|---|---|---|---|---|---|---|---|
| | S | T | Z1 | Z2 | AT | L | Key dimensions | | | | | | |
| | | | | | | | QK | b | h | t1 | | | |
| | 12 | 20 | M4 | M5 | M3 | 12 | 16 | 4 | 4 | 2.5 | **R88G-VRSF05B100PCJ** | 1/5 | 100 W |
| | 12 | 20 | M4 | M5 | M3 | 12 | 16 | 4 | 4 | 2.5 | **R88G-VRSF09B100PCJ** | 1/9 | |
| | 12 | 20 | M4 | M5 | M3 | 12 | 16 | 4 | 4 | 2.5 | **R88G-VRSF15B100PCJ** | 1/15 | |
| | 12 | 20 | M4 | M5 | M3 | 12 | 16 | 4 | 4 | 2.5 | **R88G-VRSF25B100PCJ** | 1/25 | |
| | 12 | 20 | M5 | M5 | M4 | 12 | 16 | 4 | 4 | 2.5 | **R88G-VRSF05B200PCJ** | 1/5 | 200 W |
| | 19 | 30 | M5 | M6 | M4 | 20 | 22 | 6 | 6 | 3.5 | **R88G-VRSF09C200PCJ** | 1/9 | |
| | 19 | 30 | M5 | M6 | M4 | 20 | 22 | 6 | 6 | 3.5 | **R88G-VRSF15C200PCJ** | 1/15 | |
| | 19 | 30 | M5 | M6 | M4 | 20 | 22 | 6 | 6 | 3.5 | **R88G-VRSF25C200PCJ** | 1/25 | |
| | 19 | 30 | M5 | M6 | M4 | 20 | 22 | 6 | 6 | 3.5 | **R88G-VRSF05C400PCJ** | 1/5 | 400 W |
| | 19 | 30 | M5 | M6 | M4 | 20 | 22 | 6 | 6 | 3.5 | **R88G-VRSF09C400PCJ** | 1/9 | |
| | 19 | 30 | M5 | M6 | M4 | 20 | 22 | 6 | 6 | 3.5 | **R88G-VRSF15C400PCJ** | 1/15 | |
| | 19 | 30 | M5 | M6 | M4 | 20 | 22 | 6 | 6 | 3.5 | **R88G-VRSF25C400PCJ** | 1/25 | |

### Outline Drawings

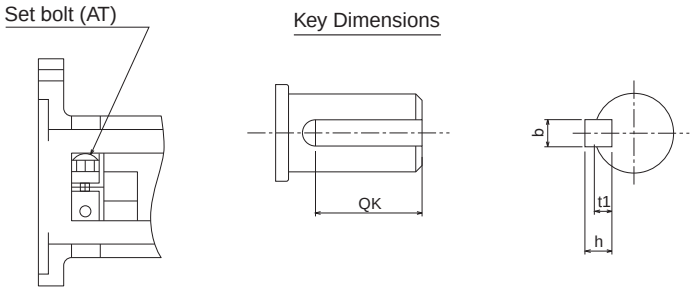

## ● Parameter Unit

**R88A-PR02G**

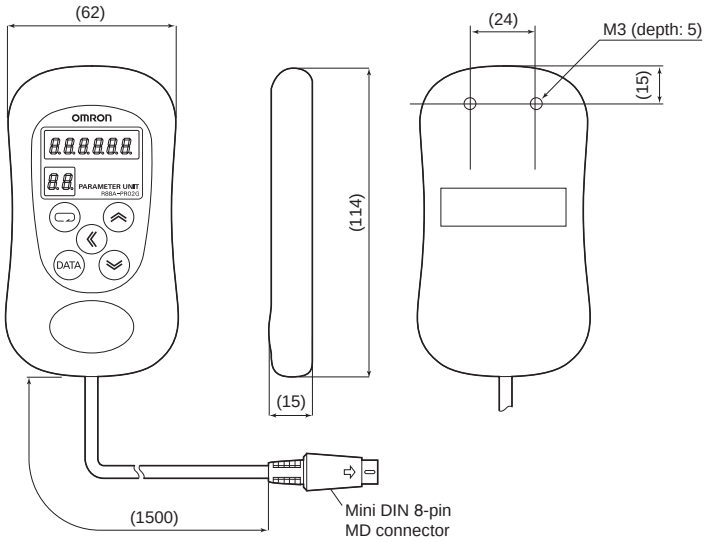


## ● External Regeneration Resistor

**R88A-RR22047S1**

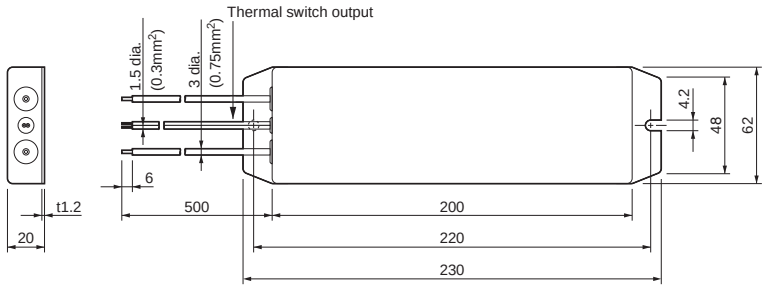


**R88A-RR08050S/-RR080100S**

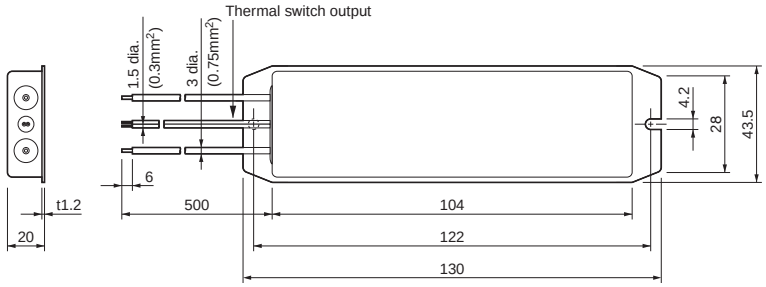


**R88A-RR50020S**

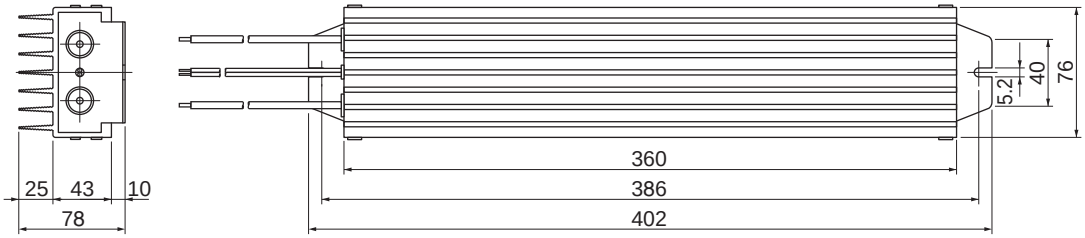

## ● Reactor

### 3G3AX-DL2002
### 3G3AX-DL2004

| Model | L |
|---|---|
| 3G3AX-DL2002 | 85 |
| 3G3AX-DL2004 | 95 |

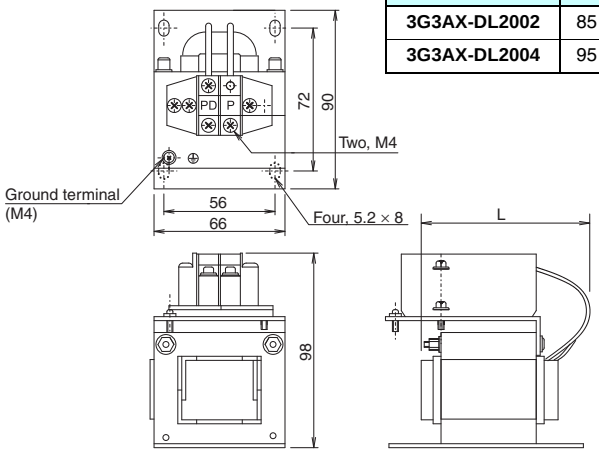


### 3G3AX-DL2007
### 3G3AX-DL2015

| Model | L |
|---|---|
| 3G3AX-DL2007 | 105 |
| 3G3AX-DL2015 | 115 |

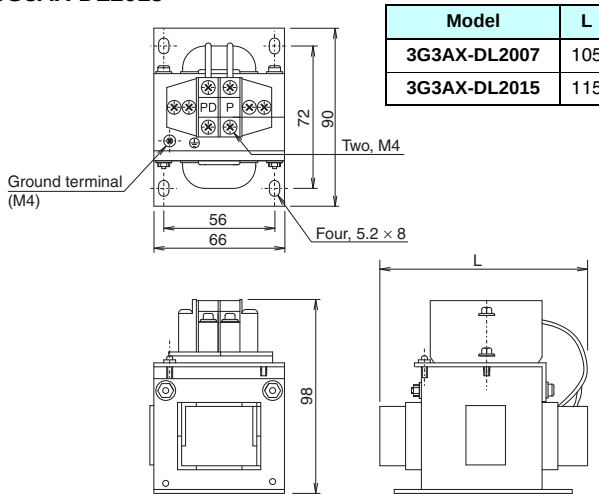


### 3G3AX-DL2022

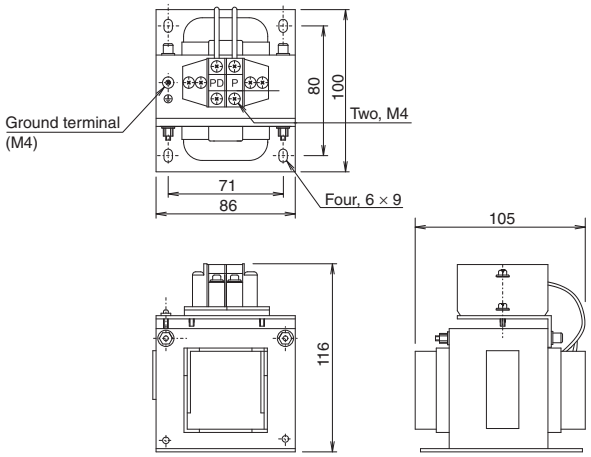


### 3G3AX-AL2025
### 3G3AX-AL2055

| Model | A | C | Y |
|---|---|---|---|
| 3G3AX-AL2025 | 120 | 82 | 67 |
| 3G3AX-AL2055 | 120 | 98 | 75 |

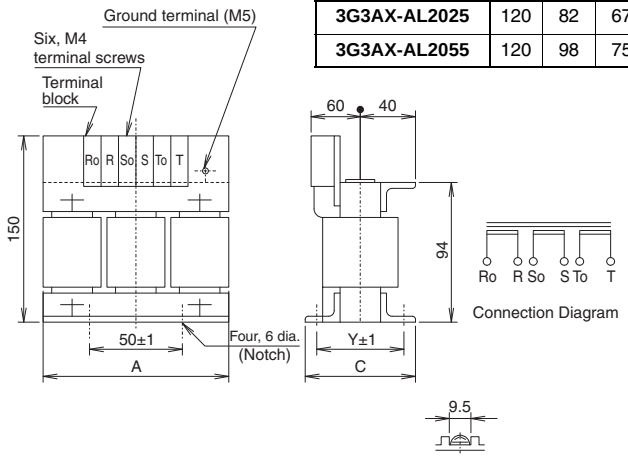


### 3G3AX-AL2110
### 3G3AX-AL2220

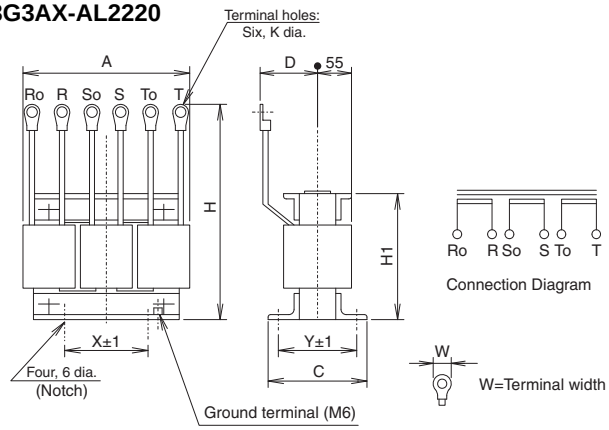


| Model | A | C | D | H | H1 | X | Y | K | W |
|---|---|---|---|---|---|---|---|---|---|
| 3G3AX-AL2110 | 150 | 103 | 70 | 170 | 108 | 60 | 80 | 5.3 | 12 |
| 3G3AX-AL2220 | 180 | 113 | 75 | 190 | 140 | 90 | 90 | 8.4 | 16.5 |

## About Manuals

| English Cat. No. | Japanese Cat. No. | Type | Name |
|---|---|---|---|
| I566 | SBCE-353 | R88M-G/R88D-GN□-ML2 | G-series AC Servomotors/Servo Drives with Built-in MECHATROLINK-II Communications User's Manual |
| W453 | SBCE-375 | CXONE-□□□□C-V□/ □□□□D-V□ | CX-Drive OPERATION MANUAL |

MEMO

MEMO

MEMO

## Read and Understand this Catalog

Please read and understand this catalog before purchasing the product. Please consult your OMRON representative if you have any questions or comments.

## Warranty and Limitations of Liability

### WARRANTY

OMRON's exclusive warranty is that the products are free from defects in materials and workmanship for a period of one year (or other period if specified) from date of sale by OMRON.

OMRON MAKES NO WARRANTY OR REPRESENTATION, EXPRESS OR IMPLIED, REGARDING NON-INFRINGEMENT, MERCHANTABILITY, OR FITNESS FOR PARTICULAR PURPOSE OF THE PRODUCTS. ANY BUYER OR USER ACKNOWLEDGES THAT THE BUYER OR USER ALONE HAS DETERMINED THAT THE PRODUCTS WILL SUITABLY MEET THE REQUIREMENTS OF THEIR INTENDED USE. OMRON DISCLAIMS ALL OTHER WARRANTIES, EXPRESS OR IMPLIED.

### LIMITATIONS OF LIABILITY

OMRON SHALL NOT BE RESPONSIBLE FOR SPECIAL, INDIRECT, OR CONSEQUENTIAL DAMAGES, LOSS OF PROFITS OR COMMERCIAL LOSS IN ANY WAY CONNECTED WITH THE PRODUCTS, WHETHER SUCH CLAIM IS BASED ON CONTRACT, WARRANTY, NEGLIGENCE, OR STRICT LIABILITY.

In no event shall the responsibility of OMRON for any act exceed the individual price of the product on which liability is asserted.

IN NO EVENT SHALL OMRON BE RESPONSIBLE FOR WARRANTY, REPAIR, OR OTHER CLAIMS REGARDING THE PRODUCTS UNLESS OMRON'S ANALYSIS CONFIRMS THAT THE PRODUCTS WERE PROPERLY HANDLED, STORED, INSTALLED, AND MAINTAINED AND NOT SUBJECT TO CONTAMINATION, ABUSE, MISUSE, OR INAPPROPRIATE MODIFICATION OR REPAIR.

## Application Considerations

### SUITABILITY FOR USE

OMRON shall not be responsible for conformity with any standards, codes, or regulations that apply to the combination of the product in the customer's application or use of the product.

Take all necessary steps to determine the suitability of the product for the systems, machines, and equipment with which it will be used.

Know and observe all prohibitions of use applicable to this product.

NEVER USE THE PRODUCT FOR AN APPLICATION INVOLVING SERIOUS RISK TO LIFE OR PROPERTY WITHOUT ENSURING THAT THE SYSTEM AS A WHOLE HAS BEEN DESIGNED TO ADDRESS THE RISKS, AND THAT THE OMRON PRODUCT IS PROPERLY RATED AND INSTALLED FOR THE INTENDED USE WITHIN THE OVERALL EQUIPMENT OR SYSTEM.

### PROGRAMMABLE PRODUCTS

OMRON shall not be responsible for the user's programming of a programmable product, or any consequence thereof.

## Disclaimers

### CHANGE IN SPECIFICATIONS

Product specifications and accessories may be changed at any time based on improvements and other reasons. Consult with your OMRON representative at any time to confirm actual specifications of purchased product.

### DIMENSIONS AND WEIGHTS

Dimensions and weights are nominal and are not to be used for manufacturing purposes, even when tolerances are shown.

### PERFORMANCE DATA

Performance data given in this catalog is provided as a guide for the user in determining suitability and does not constitute a warranty. It may represent the result of OMRON's test conditions, and the users must correlate it to actual application requirements. Actual performance is subject to the OMRON Warranty and Limitations of Liability.

**OMRON Corporation** **Industrial Automation Company**
**Tokyo, JAPAN**
**Contact: www.ia.omron.com**

***Regional Headquarters***
**OMRON EUROPE B.V.**
Wegalaan 67-69-2132 JD Hoofddorp
The Netherlands
Tel: (31)2356-81-300/Fax: (31)2356-81-388

**OMRON ELECTRONICS LLC**
One Commerce Drive Schaumburg,
IL 60173-5302 U.S.A.
Tel: (1) 847-843-7900/Fax: (1) 847-843-7787

**OMRON ASIA PACIFIC PTE. LTD.**
No. 438A Alexandra Road # 05-05/08 (Lobby 2),
Alexandra Technopark,
Singapore 119967
Tel: (65) 6835-3011/Fax: (65) 6835-2711

**OMRON (CHINA) CO., LTD.**
Room 2211, Bank of China Tower,
200 Yin Cheng Zhong Road,
PuDong New Area, Shanghai, 200120, China
Tel: (86) 21-5037-2222/Fax: (86) 21-5037-2200

**Authorized Distributor:**

© OMRON Corporation 2009-2012 All Rights Reserved.
In the interest of product improvement,
specifications are subject to change without notice.

CSM_14_1_0514
**Cat. No. I814-E1-04**
Printed in Japan
0412 (0308)

# Mouser Electronics

Authorized Distributor

Click to View Pricing, Inventory, Delivery & Lifecycle Information:

Omron:
R88D-GNA5L-ML2 R88A-CNG01R R88D-GT01L R88D-GN01H-ML2 R88D-GT04H R88D-GT50H R88D-GN02L-ML2 R88D-GT15H R88A-CCG002P2 R88D-GT01H R88D-GT04L R88D-GN01L-ML2 R88D-GT02L R88D-GN02H-ML2 R88D-GT75H R88D-GT10H R88D-GN75H-ML2 R88A-CCG0R5P4 R88D-GT08H R88D-GT20H R88D-GT30H R88A-CNG02R R88D-GN30H-ML2 R88D-GTA5L R88D-GN20H-ML2 R88D-GT02H R88A-CCG001P4 R88D-GN08H-ML2 R88D-GN04H-ML2 R88D-GN10H-ML2 R88D-GN15H-ML2 R88D-GN50H-ML2 R88D-GN04L-ML2 R88A-CRGB003C

Общество с ограниченной ответственностью «МосЧип» ИНН 7719860671 / КПП 771901001
Адрес: 105318, г.Москва, ул.Щербаковская д.3, офис 1107

**Данный компонент на территории Российской Федерации**

**Вы можете приобрести в компании MosChip.**

Для оперативного оформления запроса Вам необходимо перейти по данной ссылке:

http://moschip.ru/get-element

Вы можете разместить у нас заказ для любого Вашего проекта, будь то серийное производство или разработка единичного прибора.

В нашем ассортименте представлены ведущие мировые производители активных и пассивных электронных компонентов.

Нашей специализацией является поставка электронной компонентной базы двойного назначения, продукции таких производителей как XILINX, Intel (ex.ALTERA), Vicor, Microchip, Texas Instruments, Analog Devices, Mini-Circuits, Amphenol, Glenair.

Сотрудничество с глобальными дистрибьюторами электронных компонентов, предоставляет возможность заказывать и получать с международных складов практически любой перечень компонентов в оптимальные для Вас сроки.

На всех этапах разработки и производства наши партнеры могут получить квалифицированную поддержку опытных инженеров.

Система менеджмента качества компании отвечает требованиям в соответствии с ГОСТ Р ИСО 9001, ГОСТ РВ 0015-002 и ЭС РД 009

**Офис по работе с юридическими лицами:**

105318, г.Москва, ул.Щербаковская д.3, офис 1107, 1118, ДЦ «Щербаковский»

Телефон: +7 495 668-12-70 (многоканальный)

Факс: +7 495 668-12-70 (доб.304)

E-mail: info@moschip.ru

Skype отдела продаж:
moschip.ru
moschip.ru_4
moschip.ru_6
moschip.ru_9