OMRON

AC Servomotors/ Servo Drives

G Series

A Wide Variation of Models with the Functions and Performance Demanded in Servo Systems



» Easy adjustment

» Quickly suppress vibration

» Built-in MECHATROLINK communications interface

realizing

Complete Reinforcement of Functions and Performance Demanded in Servo Systems



Let the G Series solve your equipment problems.

Increase Productivity!

The many variations provided by G-series Servo Systems features high-precision positioning with improved response and vibration control, making it suitable for a variety of applications.

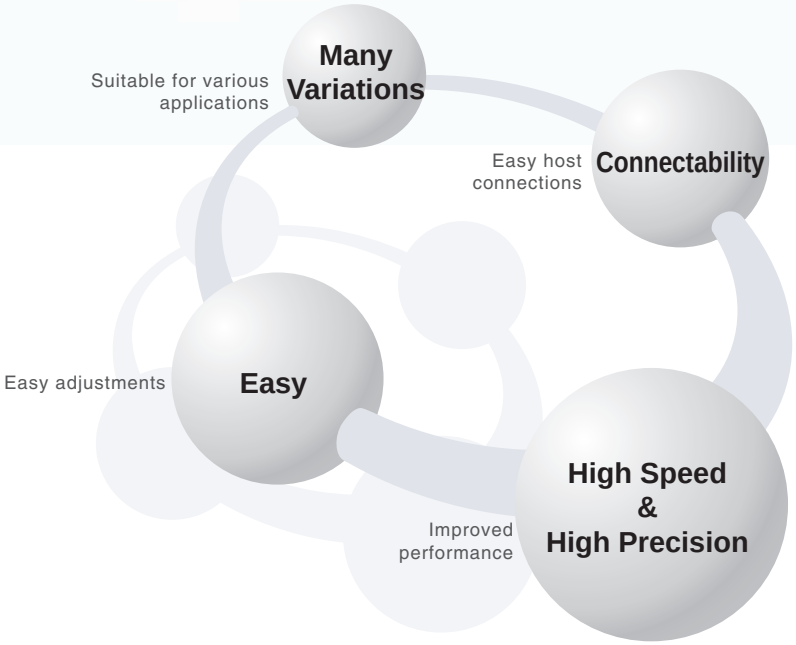



Integrated Development Environment Cut Your TCO from Design to Maintenance.

MECHATROLINK-II-compatible AC Servomotors/Servo Drives

One Cable Enables Setting and Monitoring Parameters

Connect the PLC and Servo Drive with a single cable to reduce wiring. What's more, the parameters for many Servo Drives can be set and monitored at the same time between a personal computer and the Controller.



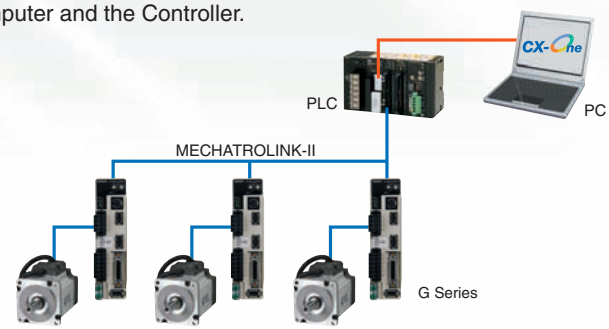

Note: MECHATROLINK-II is a registered trademark of the MECHATROLINK Members Association.

CX-One

Easily Program Positioning and Communications

With the CX-One FA Integrated Tool Package, parameters settings, program design, debugging, operation monitoring, alarms, error monitoring, and maintenance of the Servo System can be handled with ease.



Setting & Programming
Easy programming with the Smart FB Library



Parameter Editing & Monitoring
The Servomotor parameters can be edited, monitored, and saved with the CX-Drive.



Alarm & Maintenance
Easy monitoring of the NC Unit & Drive errors



INDEX

Features 2
Selection Guide 6

G-series Servomotors and Servo Drives with General-purpose Inputs

System Configuration 8
Interpreting Model Numbers 10
Ordering Information 12
Servo Drive-Servomotor Combinations 21
Servomotor and Decelerator Combinations 22
Servo Relay Units and Cables 23
Motion Control Unit Cables 23
Cable Combinations 24
Servo Drive Specifications 29
Servomotor Specifications 31
Decelerator Specifications 42
Encoder, External Regeneration Resistors, Reactor and Parameter Unit Specifications 46
Connections 48
I/O Circuit Diagrams 55
Components and Functions 57
Parameter 59
Dimensions 62
About Manuals 87

G-series Servomotors and Servo Drives with MECHATROLINK-II Communications

System Configuration 88
Interpreting Model Numbers 90
Ordering Information 92
Servo Drive-Servomotor Combinations 102
Servomotor and Decelerator Combinations 103
Cable Combinations 104
Servo Drive Specifications 108
Servomotor Specifications 111
Decelerator Specifications 122
Encoder, External Regeneration Resistors, Reactor and Parameter Unit Specifications 126
Connections 128
I/O Circuit Diagrams 133
Components and Functions 134
Parameter 136
Dimensions 138
About Manuals 163

Note: CX-Drive (version 1.61) support for G-series Servo Drives can be obtained by using the CX-One V2 auto-update function from May 30, 2008.

Note: CX-Drive (version 1.62) support for G-series Servo Drivers with MECHATROLINK-II Communications can be obtained by using the CX-One V2/V3 auto-update function from July 31, 2008.

OMRON, for Easy Setup, Easy Operation, Easy Connections, and Easy Monitoring

Wider Range of Compact Servomotors and Compatibility, Plus Fast Positioning with

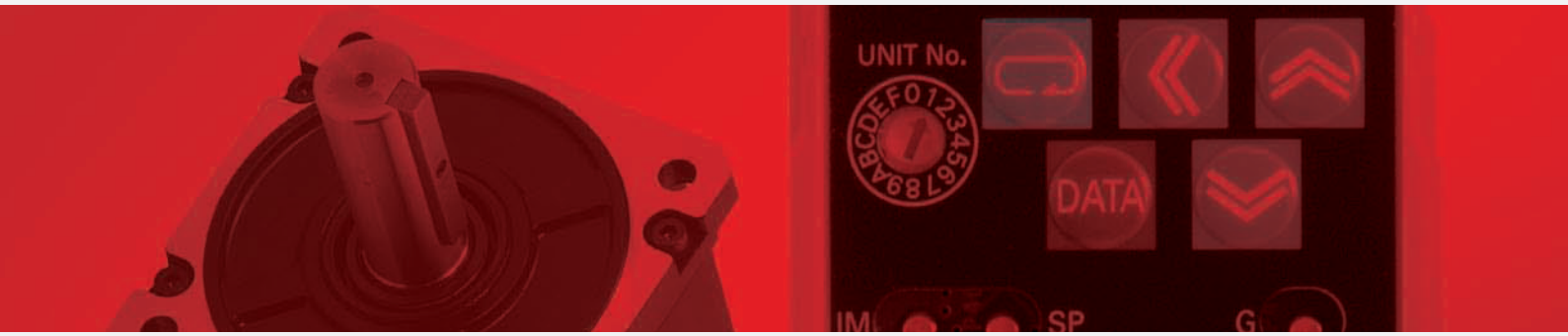

Easy!

Easy Adjustment

Realtime autotuning sets the optimum gain.

An autotuning function calculates the device load in realtime and automatically sets the optimum gain, simplifying the adjustment procedure.

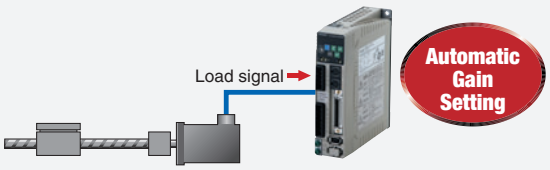

Select the Optimum Motor

A wide range of Servomotors is available to meet application needs.

You can select a suitable Servomotor from a wide range of Servomotor capacities to cater to various applications.

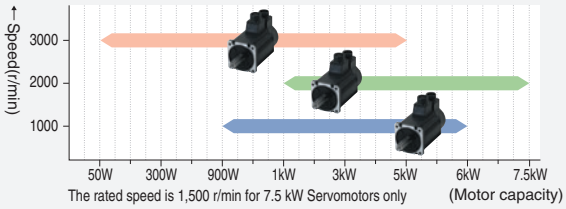

Reduce Control Panel Installation Space

Even Smaller Servo Drives.

The footprint of the Servo Drives has been reduced by 32% compared to previous OMRON models, helping to reduce control panel size.

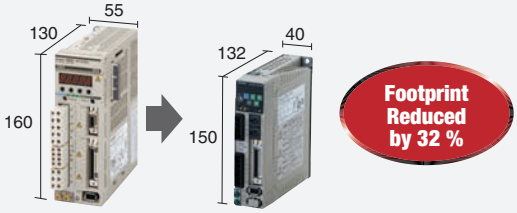

Advanced Performance!

Reduce Tact Time

Significantly better speed response frequency.

The speed response frequency has been improved by a factor of 2.5 compared to previous OMRON models. The stabilization time has been reduced, increasing machine speed and response performance.



Reduce Tact Time

Fast positioning with improved command pulse frequency performance.

The command pulse frequency is 4 times faster than previous OMRON models. This enables fast, accurate control.

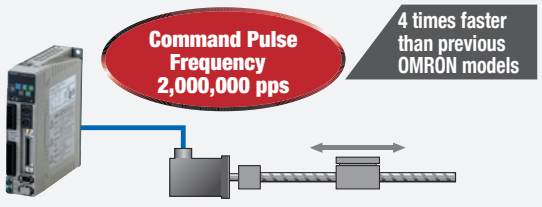

Improve Processing Accuracy

All Servomotors contain a 17-bit encoder*1 for greater accuracy.

Positioning is twice as accurate as previous OMRON models*2 for submicron accuracy. This enables stable control in the low speed range.

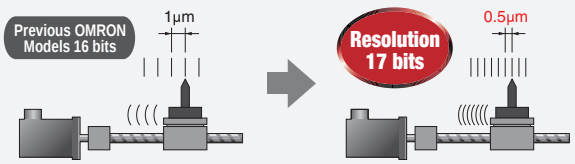

*1 For Servomotors with absolute encoders.
*2 Compared to previous OMRON models. (Servomotors with absolute encoders, 750 W max.)

Servo Drives with Increased Machine Improved Response and Vibration Control

Achieve Maximum Machine Performance with the G Series

Advanced Functionality!

Reduce Mechanical Vibration

Quick suppression of vibration with an adaptive filter.

Even if the resonant frequency changes, realtime evaluation automatically follows the changes to reduce the effect of vibration due to low mechanical rigidity, such as for conveyer belts.

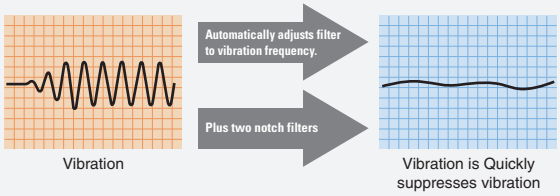

Reduce Tact Time

Reduce mechanical vibration with the vibration control function.

By removing the vibration frequency components between the stop position and the intermediate position, vibration that occurs due to low mechanical rigidity can be suppressed. (Control for two vibration frequencies)

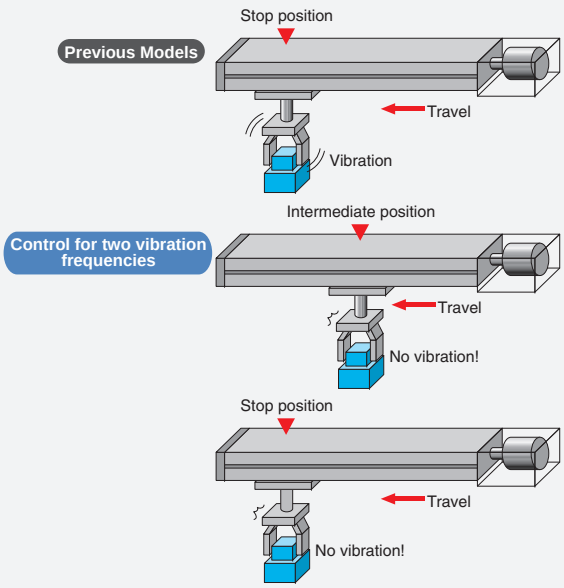

Flexible Application

Change the command control mode as required by the application.

Select from position control, speed control, and torque control for use in applications such as the pressing, tension, and injection.

Application Examples

- **Attaching Parts, Pressing, and Tightening Screws**

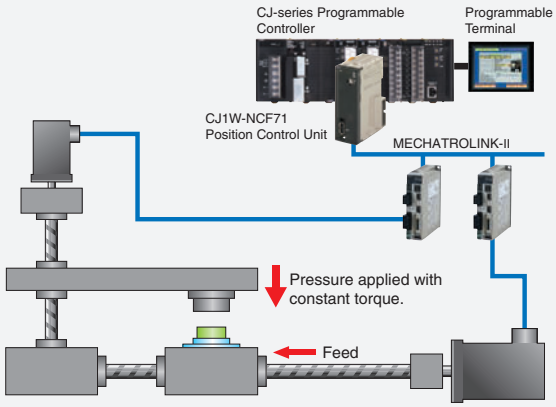

- **Rollers and Conveyers**

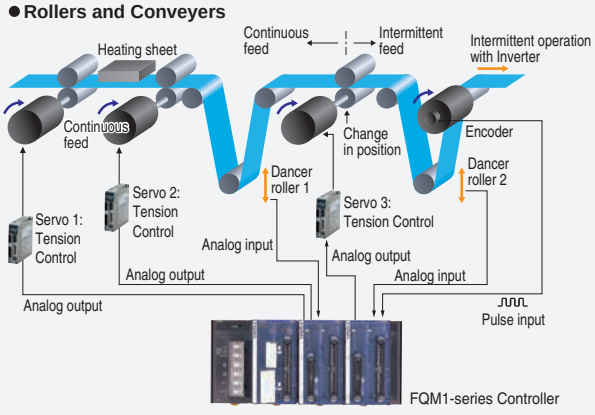

The optimum combination can be found from to handle various applications.

Servo Drive Variations

			G Series: Servo Drives with General-purpose Inputs	G Series: MECHATROLINK-II* Compatible Servo Drives
			R88D-GT 	R88D-GN□-ML2 
Power supply	AC100V		Single-phase	Single-phase
	AC200V		Single-phase, Single/Three-phase, Three-phase	Single-phase, Single/Three-phase, Three-phase
Motor capacity	AC100V		50 W, 100 W, 200 W, 400 W	50 W, 100 W, 200 W, 400 W
	AC200V	Single-phase	50 W, 100 W, 200 W, 400 W	50 W, 100 W, 200 W, 400 W
		Single/Three-phase	750 W, 900 W, 1 kW, 1.5 kW	750 W, 900 W, 1 kW, 1.5 kW
		Three-phase	2 kW, 3 kW, 4 kW, 4.5 kW, 5 kW, 6 kW, 7.5 kW	2 kW, 3 kW, 4 kW, 4.5 kW, 5 kW, 6 kW, 7.5 kW
Interface	Command type		Pulse train, Analog	ML2
Control modes	Control modes		Position control, Speed control, Torque control	Position control, Speed control, Torque control
	Control mode switching		Mode switching	Mode switching
Tuning functions	Vibration control		Vibration control *1	Vibration control *1
	Autotuning		AUTO	AUTO
	Realtime autotuning		FIT GAIN, Adaptive filter *2	Adaptive filter *2
Servo Drive functions	Torque limits		Torque limit *1	Torque limit *1
	Encoder output		ABS, INC	ABS, INC
	Internal set speeds		8 speeds	——

*1. Two limits. *2. One adaptive filter and two notch filters.

Functions

Pulse train: The speed and travel distance are input to the Servo as pulse trains.

Analog: The speed and torque are input to the Servo as analog signals.

ML2: MECHATROLINK-II high-speed Servo communications motion network. (See note.)

Position control: Control is applied to move to the target position and then stop at the target position.

Speed control: Control is applied to change the linear or rotational speed. For example, speed control is used for applications such as turning grindstones, controlling welding speeds, and controlling feeding speeds.

Torque control: Control is applied to adjust the rotational force. Torque control is suitable for applications such as parts insertion, pressing, and screw tightening.

Command control mode switching: Switching is possible between any two of the three control modes: position control, speed control, and torque control.

Vibration control function: Vibration is suppressed by automatically setting a filter for the vibration frequency.

Autotuning: The motor is moved according to a command pattern automatically generated by the Servo Drive, then estimates the load inertia from the torque required at that time to automatically set the optimum

Fit gain: The rigidity for the realtime autotuning for position control is set automatically. By repeatedly inputting a specific operation pattern, the optimum rigidity is set automatically.

Absolute output: When the Controller power supply is turned ON, the Controller reads the Servo absolute position data to restore the absolute position.

Incremental output: When the Controller power supply is turned ON, operation is always started from the origin point.

Adaptive filter: The machine load inertia is calculated in realtime and the result is used to automatically set the optimum gain.

Torque limit: Switching is possible between the first torque limit and the second torque limit to limit the Servomotor output torque.

a variety of functions and model variations

Servomotor Variations

G Series

Servomotors with General-purpose Inputs and MECHATROLINK-II* Compatible Servomotors

R88M-G



Servomotor capacity	Motor type	Cylinder type		Cylinder type	Flat type
	Rated speed	1000r/min	2000r/min	3000r/min	
	50W			INC/ABS, INC	
	100W			INC/ABS, INC	INC/ABS, INC
	200W			INC/ABS, INC	INC/ABS, INC
	400W			INC/ABS, INC	INC/ABS, INC
	750W			INC/ABS, INC	
	900W	INC/ABS			
	1kW		INC/ABS	INC/ABS	
	1.5kW		INC/ABS	INC/ABS	
	2kW	INC/ABS	INC/ABS	INC/ABS	
	3kW	INC/ABS	INC/ABS	INC/ABS	
	4kW		INC/ABS	INC/ABS	
	4.5kW	INC/ABS			
	5kW		INC/ABS	INC/ABS	
	6kW	INC/ABS			
	7.5kW		INC/ABS *4		

*4. The rated speed is 1,500 r/min for 7.5 kW Servomotors only

Functions

INC/ABS **Incremental/absolute output**: The Servomotor can be switched between an incremental output and an absolute output. When an absolute output is selected and the Controller power supply is turned ON, the Controller reads the Servo absolute position data to restore the absolute position.

INC **Incremental output**: When the Controller power supply is turned ON, operation is always started from the origin point.

*MECHATROLINK-II is a registered trademark of the MECHATROLINK Members Association

G-series AC Servomotors/Servo Drives with General-purpose Pulse-string or Analog Inputs

R88M-G/R88D-GT

Support for a Wide Range of Applications with Position Control, Speed Control, Torque Control.

- High-speed Response
  The G-series AC Servomotors and Servo Drives have achieved high-speed response capabilities, with a high-response frequency of 1 kHz.
- Suppressing Vibration of Low-rigidity Mechanisms during Acceleration/Deceleration
  The damping control function suppresses vibration of low-rigidity mechanisms or devices whose ends tend to vibrate. Two damping filters are provided to enable switching the vibration frequency automatically according to the direction of rotation and also via an external signal. In addition, the settings can be made easily merely by setting the vibration frequency and filter values, and you are assured of stable operation even if the settings are inappropriate.
- High-speed Positioning via Resonance Suppression Control
  The realtime autotuning function automatically estimates the load inertia of the machine in realtime and sets the optimal gain. The adaptive filter automatically suppresses vibration caused by resonance. Also, two independent notch filters make it possible to reduce vibration of a mechanism with multiple resonance frequencies.

System Configuration

Note: CX-Drive (version 1.61) support for G-series Servo Drives can be obtained by using the CX-One V2 auto-update function from May 30, 2008.

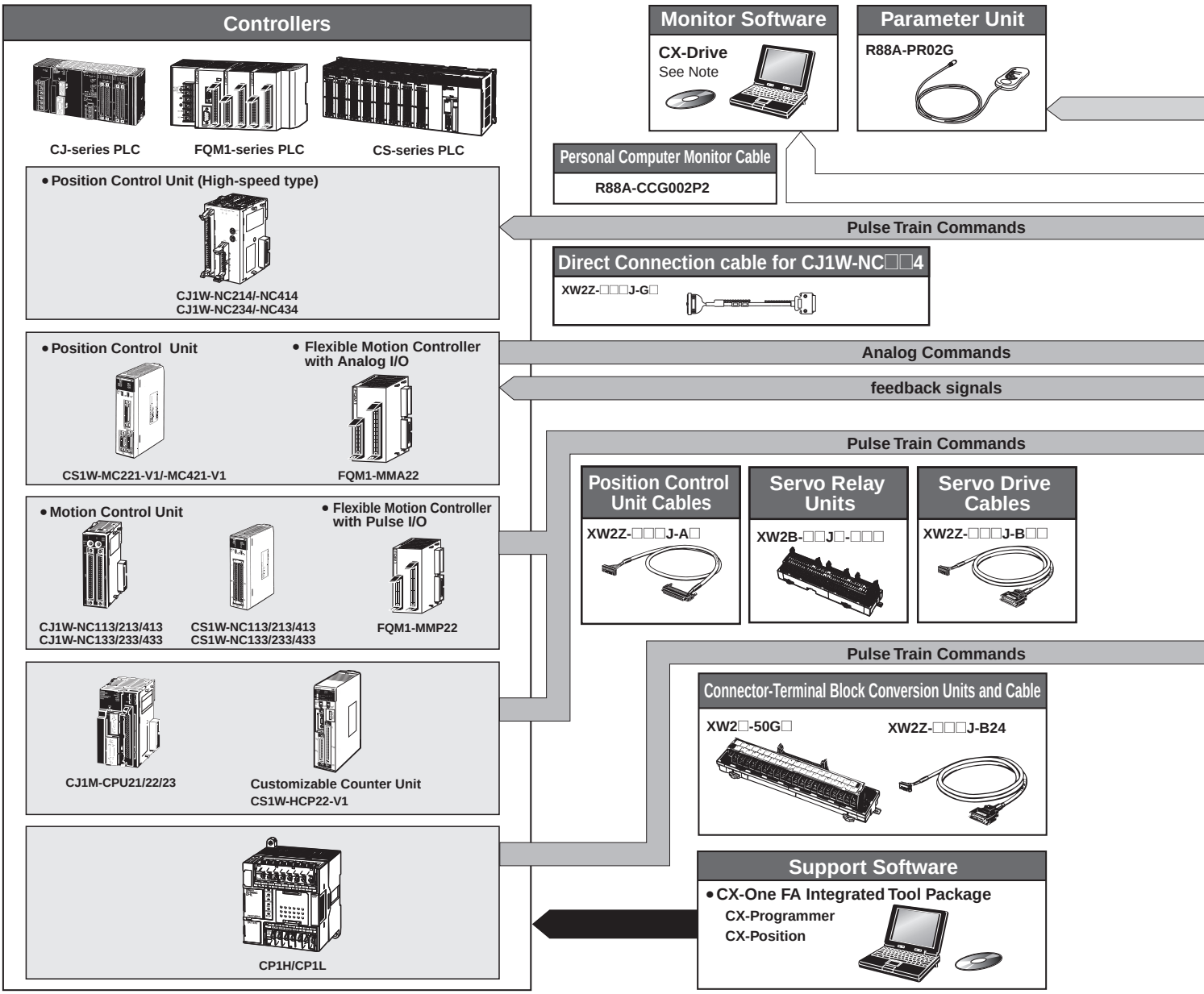

- Command Control Mode Switching
  Operation can be performed by switching between two of the following control modes: Position control, speed control (including internal speed) and torque control. Therefore, a variety of applications can be supported by one Servo Drive.
- Simplified Speed Control with Internal Speed Settings
  Eight internal speed settings allow you to change the speed easily by using external signals.



AC Servo Drives

- **G-series**
  AC Servo Drive
  R88D-GT

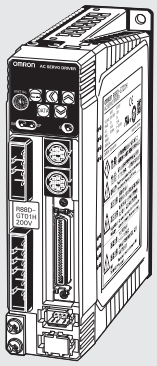

Peripheral Devices

- **Reactors**
  3G3AX-DL
  3G3AX-AL
- **External Regeneration Resistors**
  R88A-RR

Motor power signals

Power Cables

- **Standard Cables**
  Without Brake
  R88A-CAG□□□□S
  With Brake
  R88A-CAG□□□□B
- **Robot Cable**
  Without Brakes
  R88A-CAG□□□□SR
  With Brake
  R88A-CAG□□□□BR

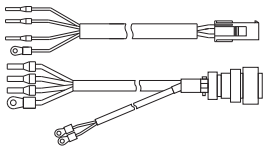

feedback signals

Encoder Cables

- **Standard Cables**
  50 W to 750 W
  R88A-CRG□□□□C
  900 W to 7.5 kW
  R88A-CRGC□□□N
- **Robot Cables**
  50 W to 750 W
  R88A-CRG□□□□CR
  900 W to 7.5 kW
  R88A-CRGC□□□NR

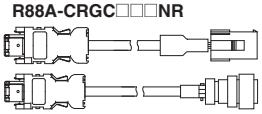

Absolute Encoder Battery Cable

R88A-CRGD0R3C (-BS)

(One Battery is included with Servo Drivers with model numbers ending in "BS.")



*Not required if a battery is connected to the control connector (CN1).

AC Servomotors

- **Model without Decelerators**
  R88M-G

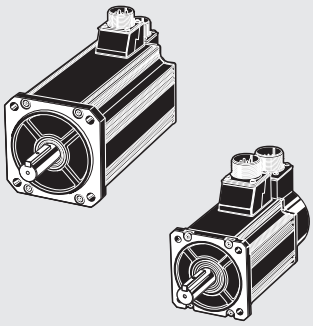

Decelerators

- **Backlash: 3 Arcminutes Max.**
  R88G-HPG
  Backlash: 15 Arcminutes Max.
  R88G-VRSF

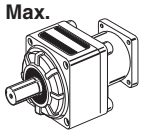

Interpreting Model Numbers

● Servo Drive Model Numbers

The model number provides information such as the Servo Drive type, the applicable Servomotor capacity, and the power supply voltage.

R88D-GT01H

G-series Servo Drive

Drive Type
- T: Three-mode type

Applicable Servomotor Capacity
- A5: 50 W
- 01: 100 W
- 02: 200 W
- 04: 400 W
- 08: 750 W
- 10: 1 kW
- 15: 1.5 kW
- 20: 2 kW
- 30: 3 kW
- 50: 5 kW
- 75: 7.5 kW

Power Supply Voltage
- L: 100 VAC
- H: 200 VAC

● Servomotor Model Numbers

R88M-GP10030H-BOS2

G-series Servomotor

Motor Type
- Blank: Cylinder type
- P: Flat type

Servomotor Capacity
- 050: 50 W
- 100: 100 W
- 200: 200 W
- 400: 400 W
- 750: 750 W
- 900: 900 W
- 1K0: 1 kW
- 1K5: 1.5 kW
- 2K0: 2 kW
- 3K0: 3 kW
- 4K0: 4 kW
- 4K5: 4.5 kW
- 5K0: 5 kW
- 6K0: 6 kW
- 7K5: 7.5 kW

Rated Rotation Speed
- 10: 1,000 r/min
- 15: 1,500 r/min
- 20: 2,000 r/min
- 30: 3,000 r/min

Applied Voltage
- H: 200 VAC with incremental encoder specifications
- L: 100 VAC with incremental encoder specifications
- T: 200 VAC with absolute encoder specifications
- S: 100 VAC with absolute encoder specifications

Option
- Blank: Straight shaft
- B: With brake
- O: With oil seal
- S2: With key and tap

● Understanding Decelerator Model Numbers

Backlash = 3' Max.

R88G-HPG14A05100PBJ

Decelerator for G-Series Servomotors
Backlash = 3' Max.

Flange Size Number
- 11A: □40
- 14A: □60
- 20A: □90
- 32A: □120
- 50A: □170
- 65A: □230

Gear Ratio
- 05: 1/5
- 09: 1/9 (only frame number 11A)
- 11: 1/11 (except frame number 65A)
- 12: 1/12 (only frame number 65A)
- 20: 1/20 (only frame number 65A)
- 21: 1/21 (except frame number 65A)
- 25: 1/25 (only frame number 65A)
- 33: 1/33
- 45: 1/45

Applicable Servomotor Capacity
- 050: 50 W
- 100: 100 W
- 200: 200 W
- 400: 400 W
- 750: 750 W
- 900: 900 W
- 1K0: 1 kW
- 1K5: 1.5 kW
- 2K0: 2 kW
- 3K0: 3 kW
- 4K0: 4 kW
- 4K5: 4.5 kW
- 5K0: 5 kW
- 6K0: 6 kW
- 7K5: 7 kW

Motor Type
- Blank: 3,000-r/min cylindrical servomotors
- P: flat servomotors
- S: 2,000-r/min servomotors
- T: 1,000-r/min servomotors

Backlash
- B: 3' max.

Option
- Blank: Straight shaft
- J: With key and tap

Backlash = 15' Max.

R88G-VRSF09B100PCJ

Decelerator for G-Series Servomotors
Backlash = 15' Max.

Gear Ratio
- 05: 1/5
- 09: 1/9
- 15: 1/15
- 25: 1/25

Flange Size Number
- B: □52
- C: □78
- D: □98

Applicable Servomotor Capacity
- 050: 50 W
- 100: 100 W
- 200: 200 W
- 400: 400 W
- 750: 750 W

Motor Type
- Blank: 3,000-r/min cylindrical servomotors
- P: flat servomotors

Backlash
- C: 15' max.

Option
- J: With key and tap

Ordering Information

● Servo Drives

Specifications		Model
Single-phase 100 VAC	50 W	**R88D-GTA5L**
	100 W	**R88D-GT01L**
	200 W	**R88D-GT02L**
	400 W	**R88D-GT04L**
Single-phase 200 VAC	50 W	**R88D-GT01H**
	100 W	
	200 W	**R88D-GT02H**
	400 W	**R88D-GT04H**
Single-phase/three-phase 200 VAC	750 W	**R88D-GT08H**
	1 kW	**R88D-GT10H**
	900 W	**R88D-GT15H**
	1 kW	
	1.5 kW	
Three-phase 200 VAC	2 kW	**R88D-GT20H**
	2 kW	**R88D-GT30H**
	3 kW	
	3 kW	**R88D-GT50H**
	4 kW	
	4.5 kW	
	5 kW	
	6 kW	**R88D-GT75H**
	7.5 kW	

● Servomotors

INC 3,000-r/min Cylindrical Servomotors

Specifications			Model	
			Straight shaft	Straight shaft with key and tap
Without brake	100 V	50 W	**R88M-G05030H**	**R88M-G05030H-S2**
		100 W	**R88M-G10030L**	**R88M-G10030L-S2**
		200 W	**R88M-G20030L**	**R88M-G20030L-S2**
		400 W	**R88M-G40030L**	**R88M-G40030L-S2**
	200 V	50 W	**R88M-G05030H**	**R88M-G05030H-S2**
		100 W	**R88M-G10030H**	**R88M-G10030H-S2**
		200 W	**R88M-G20030H**	**R88M-G20030H-S2**
		400 W	**R88M-G40030H**	**R88M-G40030H-S2**
		750 W	**R88M-G75030H**	**R88M-G75030H-S2**
With brake	100 V	50 W	**R88M-G05030H-B**	**R88M-G05030H-BS2**
		100 W	**R88M-G10030L-B**	**R88M-G10030L-BS2**
		200 W	**R88M-G20030L-B**	**R88M-G20030L-BS2**
		400 W	**R88M-G40030L-B**	**R88M-G40030L-BS2**
	200 V	50 W	**R88M-G05030H-B**	**R88M-G05030H-BS2**
		100 W	**R88M-G10030H-B**	**R88M-G10030H-BS2**
		200 W	**R88M-G20030H-B**	**R88M-G20030H-BS2**
		400 W	**R88M-G40030H-B**	**R88M-G40030H-BS2**
		750 W	**R88M-G75030H-B**	**R88M-G75030H-BS2**

Note: Models with oil seals are also available.

ABS/INC 3,000-r/min Cylindrical Servomotors

Specifications			Model	
			Straight shaft	Straight shaft with key and tap
Without brake	100 V	50 W	R88M-G05030T	R88M-G05030T-S2
		100 W	R88M-G10030S	R88M-G10030S-S2
		200 W	R88M-G20030S	R88M-G20030S-S2
	200 V	400 W	R88M-G40030S	R88M-G40030S-S2
		50 W	R88M-G05030T	R88M-G05030T-S2
		100 W	R88M-G10030T	R88M-G10030T-S2
		200 W	R88M-G20030T	R88M-G20030T-S2
		400 W	R88M-G40030T	R88M-G40030T-S2
		750 W	R88M-G75030T	R88M-G75030T-S2
		1 kW	R88M-G1K030T	R88M-G1K030T-S2
		1.5 kW	R88M-G1K530T	R88M-G1K530T-S2
		2 kW	R88M-G2K030T	R88M-G2K030T-S2
		3 kW	R88M-G3K030T	R88M-G3K030T-S2
		4 kW	R88M-G4K030T	R88M-G4K030T-S2
		5 kW	R88M-G5K030T	R88M-G5K030T-S2
With brake	100 V	50 W	R88M-G05030T-B	R88M-G05030T-BS2
		100 W	R88M-G10030S-B	R88M-G10030S-BS2
		200 W	R88M-G20030S-B	R88M-G20030S-BS2
		400 W	R88M-G40030S-B	R88M-G40030S-BS2
	200 V	50 W	R88M-G05030T-B	R88M-G05030T-BS2
		100 W	R88M-G10030T-B	R88M-G10030T-BS2
		200 W	R88M-G20030T-B	R88M-G20030T-BS2
		400 W	R88M-G40030T-B	R88M-G40030T-BS2
		750 W	R88M-G75030T-B	R88M-G75030T-BS2
		1 kW	R88M-G1K030T-B	R88M-G1K030T-BS2
		1.5 kW	R88M-G1K530T-B	R88M-G1K530T-BS2
		2 kW	R88M-G2K030T-B	R88M-G2K030T-BS2
		3 kW	R88M-G3K030T-B	R88M-G3K030T-BS2
		4 kW	R88M-G4K030T-B	R88M-G4K030T-BS2
		5 kW	R88M-G5K030T-B	R88M-G5K030T-BS2

Note: Models with oil seals are also available.

INC 3,000-r/min Flat Servomotors

Specifications			Model	
			Straight shaft	Straight shaft with key and tap
Without brake	100 V	100 W	R88M-GP10030L	R88M-GP10030L-S2
		200 W	R88M-GP20030L	R88M-GP20030L-S2
		400 W	R88M-GP40030L	R88M-GP40030L-S2
	200 V	100 W	R88M-GP10030H	R88M-GP10030H-S2
		200 W	R88M-GP20030H	R88M-GP20030H-S2
		400 W	R88M-GP40030H	R88M-GP40030H-S2
With brake	100 V	100 W	R88M-GP10030L-B	R88M-GP10030L-BS2
		200 W	R88M-GP20030L-B	R88M-GP20030L-BS2
		400 W	R88M-GP40030L-B	R88M-GP40030L-BS2
	200 V	100 W	R88M-GP10030H-B	R88M-GP10030H-BS2
		200 W	R88M-GP20030H-B	R88M-GP20030H-BS2
		400 W	R88M-GP40030H-B	R88M-GP40030H-BS2

Note: Models with oil seals are also available.

ABS/INC 3,000-r/min Flat Servomotors

Specifications			Model	
			Straight shaft	Straight shaft with key and tap
Without brake	100 V	100 W	R88M-GP10030S	R88M-GP10030S-S2
		200 W	R88M-GP20030S	R88M-GP20030S-S2
		400 W	R88M-GP40030S	R88M-GP40030S-S2
	200 V	100 W	R88M-GP10030T	R88M-GP10030T-S2
		200 W	R88M-GP20030T	R88M-GP20030T-S2
		400 W	R88M-GP40030T	R88M-GP40030T-S2
With brake	100 V	100 W	R88M-GP10030S-B	R88M-GP10030S-BS2
		200 W	R88M-GP20030S-B	R88M-GP20030S-BS2
		400 W	R88M-GP40030S-B	R88M-GP40030S-BS2
	200 V	100 W	R88M-GP10030T-B	R88M-GP10030T-BS2
		200 W	R88M-GP20030T-B	R88M-GP20030T-BS2
		400 W	R88M-GP40030T-B	R88M-GP40030T-BS2

Note: Models with oil seals are also available.

ABS/INC 2,000-r/min Cylindrical Servomotors

Specifications			Model	
			Straight shaft	Straight shaft with key and tap
Without brake	200 V	1 kW	R88M-G1K020T	R88M-G1K020T-S2
		1.5 kW	R88M-G1K520T	R88M-G1K520T-S2
		2 kW	R88M-G2K020T	R88M-G2K020T-S2
		3 kW	R88M-G3K020T	R88M-G3K020T-S2
		4 kW	R88M-G4K020T	R88M-G4K020T-S2
		5 kW	R88M-G5K020T	R88M-G5K020T-S2
		7.5 kW	R88M-G7K515T	R88M-G7K515T-S2
With brake	200 V	1 kW	R88M-G1K020T-B	R88M-G1K020T-BS2
		1.5 kW	R88M-G1K520T-B	R88M-G1K520T-BS2
		2 kW	R88M-G2K020T-B	R88M-G2K020T-BS2
		3 kW	R88M-G3K020T-B	R88M-G3K020T-BS2
		4 kW	R88M-G4K020T-B	R88M-G4K020T-BS2
		5 kW	R88M-G5K020T-B	R88M-G5K020T-BS2
		7.5 kW	R88M-G7K515T-B	R88M-G7K515T-BS2

Note: 1. Models with oil seals are also available.
Note: 2. The rated rotation speed for 7.5-kW Servomotors is 1,500 r/min.

ABS/INC 1,000-r/min Cylindrical Servomotors

Specifications			Model	
			Straight shaft	Straight shaft with key and tap
Without brake	200 V	900 W	R88M-G90010T	R88M-G90010T-S2
		2 kW	R88M-G2K010T	R88M-G2K010T-S2
		3 kW	R88M-G3K010T	R88M-G3K010T-S2
		4.5 kW	R88M-G4K510T	R88M-G4K510T-S2
		6 kW	R88M-G6K010T	R88M-G6K010T-S2
With brake	200 V	900 W	R88M-G90010T-B	R88M-G90010T-BS2
		2 kW	R88M-G2K010T-B	R88M-G2K010T-BS2
		3 kW	R88M-G3K010T-B	R88M-G3K010T-BS2
		4.5 kW	R88M-G4K510T-B	R88M-G4K510T-BS2
		6 kW	R88M-G6K010T-B	R88M-G6K010T-BS2

Note: Models with oil seals are also available.

● Decelerators

Backlash: 3 Arcminutes Max.

Decelerators for 3,000-r/min Cylindrical Servomotors

Straight shaft

Specifications		Model
Motor capacity	Gear ratio	
50 W	1/5	R88G-HPG11A05100B
	1/9	R88G-HPG11A09050B
	1/21	R88G-HPG14A21100B
	1/33	R88G-HPG14A33050B
	1/45	R88G-HPG14A45050B
100 W	1/5	R88G-HPG11A05100B
	1/11	R88G-HPG14A11100B
	1/21	R88G-HPG14A21100B
	1/33	R88G-HPG20A33100B
	1/45	R88G-HPG20A45100B
200 W	1/5	R88G-HPG14A05200B
	1/11	R88G-HPG14A11200B
	1/21	R88G-HPG20A21200B
	1/33	R88G-HPG20A33200B
	1/45	R88G-HPG20A45200B
400 W	1/5	R88G-HPG14A05400B
	1/11	R88G-HPG20A11400B
	1/21	R88G-HPG20A21400B
	1/33	R88G-HPG32A33400B
	1/45	R88G-HPG32A45400B
750 W	1/5	R88G-HPG20A05750B
	1/11	R88G-HPG20A11750B
	1/21	R88G-HPG32A21750B
	1/33	R88G-HPG32A33750B
	1/45	R88G-HPG32A45750B
1 kW	1/5	R88G-HPG32A051K0B
	1/11	R88G-HPG32A111K0B
	1/21	R88G-HPG32A211K0B
	1/33	R88G-HPG32A331K0B
	1/45	R88G-HPG50A451K0B
1.5 kW	1/5	R88G-HPG32A052K0B
	1/11	R88G-HPG32A112K0B
	1/21	R88G-HPG32A211K5B
	1/33	R88G-HPG50A332K0B
	1/45	R88G-HPG50A451K5B
2 kW	1/5	R88G-HPG32A052K0B
	1/11	R88G-HPG32A112K0B
	1/21	R88G-HPG50A212K0B
	1/33	R88G-HPG50A332K0B
3 kW	1/5	R88G-HPG32A053K0B
	1/11	R88G-HPG50A113K0B
	1/21	R88G-HPG50A213K0B
4 kW	1/5	R88G-HPG32A054K0B
	1/11	R88G-HPG50A115K0B
5 kW	1/5	R88G-HPG50A055K0B
	1/11	R88G-HPG50A115K0B

Note: 1. The standard models have a straight shaft.
Note: 2. To order a Servomotor with a straight shaft with key, add "J" to the end of the model number, in the place indicated by the box.
Example: R88G-HPG11B05100BJ

Backlash: 3 Arcminutes Max.

Decelerators for 3,000-r/min Flat Servomotors

Straight shaft

Specifications		Model
Motor capacity	Gear ratio	
100 W	1/5	R88G-HPG11A05100PB
	1/11	R88G-HPG14A11100PB
	1/21	R88G-HPG14A21100PB
	1/33	R88G-HPG20A33100PB
	1/45	R88G-HPG20A45100PB
200 W	1/5	R88G-HPG14A05200PB
	1/11	R88G-HPG20A11200PB
	1/21	R88G-HPG20A21200PB
	1/33	R88G-HPG20A33200PB
	1/45	R88G-HPG20A45200PB
400 W	1/5	R88G-HPG20A05400PB
	1/11	R88G-HPG20A11400PB
	1/21	R88G-HPG20A21400PB
	1/33	R88G-HPG32A33400PB
	1/45	R88G-HPG32A45400PB

Note: 1. The standard models have a straight shaft.
Note: 2. To order a Servomotor with a straight shaft with key, add "J" to the end of the model number.

Backlash: 3 Arcminutes Max.
Decelerators for 2,000-r/min Cylindrical Servomotors
Straight shaft

Specifications		Model
Motor capacity	Gear ratio	
1 kW	1/5	R88G-HPG32A053K0B
	1/11	R88G-HPG32A112K0SB
	1/21	R88G-HPG32A211K0SB
	1/33	R88G-HPG50A332K0SB
	1/45	R88G-HPG50A451K0SB
1.5 kW	1/5	R88G-HPG32A053K0B
	1/11	R88G-HPG32A112K0SB
	1/21	R88G-HPG50A213K0B
	1/33	R88G-HPG50A332K0SB
2 kW	1/5	R88G-HPG32A053K0B
	1/11	R88G-HPG32A112K0SB
	1/21	R88G-HPG50A213K0B
	1/33	R88G-HPG50A332K0SB
3 kW	1/5	R88G-HPG32A054K0B
	1/11	R88G-HPG50A115K0B
	1/21	R88G-HPG50A213K0SB
	1/25	R88G-HPG65A253K0SB
4 kW	1/5	R88G-HPG50A054K0SB
	1/11	R88G-HPG50A114K0SB
	1/20	R88G-HPG65A204K0SB
	1/25	R88G-HPG65A254K0SB
5 kW	1/5	R88G-HPG50A055K0SB
	1/11	R88G-HPG50A115K0SB
	1/20	R88G-HPG65A205K0SB
	1/25	R88G-HPG65A255K0SB
7.5 kW	1/5	R88G-HPG65A057K5SB
	1/12	R88G-HPG65A127K5SB

Note: 1. The standard models have a straight shaft.
Note: 2. To order a Servomotor with a straight shaft with key, add “J” to the end of the model number.

Backlash: 3 Arcminutes Max.
Decelerators for 1,000-r/min Cylindrical Servomotors
Straight shaft

Specifications		Model
Motor capacity	Gear ratio	
900 W	1/5	R88G-HPG32A05900TB
	1/11	R88G-HPG32A11900TB
	1/21	R88G-HPG50A21900TB
	1/33	R88G-HPG50A33900TB
2 kW	1/5	R88G-HPG32A052K0TB
	1/11	R88G-HPG50A112K0TB
	1/21	R88G-HPG50A212K0TB
	1/25	R88G-HPG65A255K0SB
3 kW	1/5	R88G-HPG50A055K0SB
	1/11	R88G-HPG50A115K0SB
	1/20	R88G-HPG65A205K0SB
	1/25	R88G-HPG65A255K0SB
4.5 kW	1/5	R88G-HPG50A054K5TB
	1/12	R88G-HPG65A127K5SB
	1/20	R88G-HPG65A204K5TB
6 kW	1/5	R88G-HPG65A057K5SB
	1/12	R88G-HPG65A127K5SB

Note: 1. The standard models have a straight shaft.
Note: 2. Models with a key and tap are indicated with "J" at the end of the model number.

Backlash: 15 Arcminutes Max.
Decelerators for 3,000-r/min Cylindrical Servomotors
Straight shaft with key and tap

Specifications		Model
Motor capacity	Gear ratio	
50 W	1/5	R88G-VRSF05B100CJ
	1/9	R88G-VRSF09B100CJ
	1/15	R88G-VRSF15B100CJ
	1/25	R88G-VRSF25B100CJ
100 W	1/5	R88G-VRSF05B100CJ
	1/9	R88G-VRSF09B100CJ
	1/15	R88G-VRSF15B100CJ
	1/25	R88G-VRSF25B100CJ
200 W	1/5	R88G-VRSF05B200CJ
	1/9	R88G-VRSF09C200CJ
	1/15	R88G-VRSF15C200CJ
	1/25	R88G-VRSF25C200CJ
400 W	1/5	R88G-VRSF05C400CJ
	1/9	R88G-VRSF09C400CJ
	1/15	R88G-VRSF15C400CJ
	1/25	R88G-VRSF25C400CJ
750 W	1/5	R88G-VRSF05C750CJ
	1/9	R88G-VRSF09D750CJ
	1/15	R88G-VRSF15D750CJ
	1/25	R88G-VRSF25D750CJ

Backlash: 15 Arcminutes Max.
Decelerators for 3,000-r/min Flat Servomotors
Straight shaft with key and tap

Specifications		Model
Motor capacity	Gear ratio	
100 W	1/5	R88G-VRSF05B100PCJ
	1/9	R88G-VRSF09B100PCJ
	1/15	R88G-VRSF15B100PCJ
	1/25	R88G-VRSF25B100PCJ
200 W	1/5	R88G-VRSF05B200PCJ
	1/9	R88G-VRSF09C200PCJ
	1/15	R88G-VRSF15C200PCJ
	1/25	R88G-VRSF25C200PCJ
400 W	1/5	R88G-VRSF05C400PCJ
	1/9	R88G-VRSF09C400PCJ
	1/15	R88G-VRSF15C400PCJ
	1/25	R88G-VRSF25C400PCJ

Accessories and Cables

• Servomotor Power Cables (Standard Cables)
For Servomotor without brake

Specifications		Model
3,000-r/min Servomotors of 50 to 750 W, 3,000-r/min Flat Servomotors of 100 to 400 W	3 m	R88A-CAGA003S
	5 m	R88A-CAGA005S
	10 m	R88A-CAGA010S
	15 m	R88A-CAGA015S
	20 m	R88A-CAGA020S
	30 m	R88A-CAGA030S
	40 m	R88A-CAGA040S
	50 m	R88A-CAGA050S
3,000-r/min Servomotors of 1 to 1.5 kW, 2,000-r/min Servomotors of 1 to 1.5 kW, 1,000-r/min Servomotors of 900 W	3 m	R88A-CAGB003S
	5 m	R88A-CAGB005S
	10 m	R88A-CAGB010S
	15 m	R88A-CAGB015S
	20 m	R88A-CAGB020S
	30 m	R88A-CAGB030S
	40 m	R88A-CAGB040S
	50 m	R88A-CAGB050S
3,000-r/min Servomotors of 2 kW, 2,000-r/min Servomotors of 2 kW	3 m	R88A-CAGC003S
	5 m	R88A-CAGC005S
	10 m	R88A-CAGC010S
	15 m	R88A-CAGC015S
	20 m	R88A-CAGC020S
	30 m	R88A-CAGC030S
	40 m	R88A-CAGC040S
	50 m	R88A-CAGC050S
3,000-r/min Servomotors of 3 to 5 kW, 2,000-r/min Servomotors of 3 to 5 kW, 1,000-r/min Servomotors of 2 to 4.5 kW	3 m	R88A-CAGD003S
	5 m	R88A-CAGD005S
	10 m	R88A-CAGD010S
	15 m	R88A-CAGD015S
	20 m	R88A-CAGD020S
	30 m	R88A-CAGD030S
	40 m	R88A-CAGD040S
	50 m	R88A-CAGD050S
1,500-r/min Servomotors of 7.5 kW, 1,000-r/min Servomotors of 6 kW	3 m	R88A-CAGE003S
	5 m	R88A-CAGE005S
	10 m	R88A-CAGE010S
	15 m	R88A-CAGE015S
	20 m	R88A-CAGE020S
	30 m	R88A-CAGE030S
	40 m	R88A-CAGE040S
	50 m	R88A-CAGE050S

Note: There are separate connectors for power and brakes for 3,000-r/min Servomotors of 50 to 750 W, Flat Servomotors, and Servomotors of 6 kW or higher. When a Servomotor with a brake is used, it is necessary to use both a Power Cable for Servomotors without brakes and a Brake Cable.

• Servomotor Power Cables (Standard Cables)
For Servomotor with brake

Specifications		Model
3,000-r/min Servomotors of 1 to 1.5 kW, 2,000-r/min Servomotors of 1 to 1.5 kW, 1,000-r/min Servomotors of 900 W	3 m	R88A-CAGB003B
	5 m	R88A-CAGB005B
	10 m	R88A-CAGB010B
	15 m	R88A-CAGB015B
	20 m	R88A-CAGB020B
	30 m	R88A-CAGB030B
	40 m	R88A-CAGB040B
	50 m	R88A-CAGB050B
3,000-r/min Servomotors of 2 kW, 2,000-r/min Servomotors of 2 kW	3 m	R88A-CAGC003B
	5 m	R88A-CAGC005B
	10 m	R88A-CAGC010B
	15 m	R88A-CAGC015B
	20 m	R88A-CAGC020B
	30 m	R88A-CAGC030B
	40 m	R88A-CAGC040B
	50 m	R88A-CAGC050B
3,000-r/min Servomotors of 3 to 5 kW, 2,000-r/min Servomotors of 3 to 5 kW, 1,000-r/min Servomotors of 2 to 4.5 kW	3 m	R88A-CAGD003B
	5 m	R88A-CAGD005B
	10 m	R88A-CAGD010B
	15 m	R88A-CAGD015B
	20 m	R88A-CAGD020B
	30 m	R88A-CAGD030B
	40 m	R88A-CAGD040B
	50 m	R88A-CAGD050B

• Brake Cables (Standard Cables)

Specifications		Model
3,000-r/min Servomotors of 50 to 750 W, 3,000-r/min Flat Servomotors of 100 to 400 W	3 m	R88A-CAGA003B
	5 m	R88A-CAGA005B
	10 m	R88A-CAGA010B
	15 m	R88A-CAGA015B
	20 m	R88A-CAGA020B
	30 m	R88A-CAGA030B
	40 m	R88A-CAGA040B
	50 m	R88A-CAGA050B
1,500-r/min Servomotors of 7.5 kW, 1,000-r/min Servomotors of 6 kW	3 m	R88A-CAGE003B
	5 m	R88A-CAGE005B
	10 m	R88A-CAGE010B
	15 m	R88A-CAGE015B
	20 m	R88A-CAGE020B
	30 m	R88A-CAGE030B
	40 m	R88A-CAGE040B
	50 m	R88A-CAGE050B

• Encoder Cables (Standard Cables)

Specifications		Model
3,000-r/min Servomotors of 50 to 750 W with an absolute encoder, 3,000-r/min Flat Servomotors of 100 to 400 W with an absolute encoder	3 m	**R88A-CRGA003C**
	5 m	**R88A-CRGA005C**
	10 m	**R88A-CRGA010C**
	15 m	**R88A-CRGA015C**
	20 m	**R88A-CRGA020C**
	30 m	**R88A-CRGA030C**
	40 m	**R88A-CRGA040C**
	50 m	**R88A-CRGA050C**
3,000-r/min Servomotors of 50 to 750 W with an incremental encoder, 3,000-r/min Flat Servomotors of 100 to 400 W with an incremental encoder	3 m	**R88A-CRGB003C**
	5 m	**R88A-CRGB005C**
	10 m	**R88A-CRGB010C**
	15 m	**R88A-CRGB015C**
	20 m	**R88A-CRGB020C**
	30 m	**R88A-CRGB030C**
	40 m	**R88A-CRGB040C**
	50 m	**R88A-CRGB050C**
3,000-r/min Servomotors of 1 to 5 kW, 2,000-r/min Servomotors of 1 to 5 kW, 1,500-r/min Servomotors of 7.5 kW, 1,000-r/min Servomotors of 900 W to 6 kW	3 m	**R88A-CRGC003N**
	5 m	**R88A-CRGC005N**
	10 m	**R88A-CRGC010N**
	15 m	**R88A-CRGC015N**
	20 m	**R88A-CRGC020N**
	30 m	**R88A-CRGC030N**
	40 m	**R88A-CRGC040N**
	50 m	**R88A-CRGC050N**

• Absolute Encoder Battery Cable

Specifications		Model
Absolute Encoder Battery Cable (Battery not included.)	0.3 m	**R88A-CRGD0R3C**
Absolute Encoder Battery Cable (One R88A-BAT01G Battery included.)	0.3 m	**R88A-CRGD0R3C-BS**

• Absolute Encoder Backup Battery

Specifications	Model
2,000 mA·h 3.6 V	**R88A-BAT01G**

• Servomotor Power Cables (Robot Cables)

For Servomotor without brake

Specifications		Model
3,000-r/min Servomotors of 50 to 750 W, 3,000-r/min Flat Servomotors of 100 to 400 W	3 m	**R88A-CAGA003SR**
	5 m	**R88A-CAGA005SR**
	10 m	**R88A-CAGA010SR**
	15 m	**R88A-CAGA015SR**
	20 m	**R88A-CAGA020SR**
	30 m	**R88A-CAGA030SR**
	40 m	**R88A-CAGA040SR**
	50 m	**R88A-CAGA050SR**
3,000-r/min Servomotors of 1 to 1.5 kW, 2,000-r/min Servomotors of 1 to 1.5 kW, 1,000-r/min Servomotors of 900 W	3 m	**R88A-CAGB003SR**
	5 m	**R88A-CAGB005SR**
	10 m	**R88A-CAGB010SR**
	15 m	**R88A-CAGB015SR**
	20 m	**R88A-CAGB020SR**
	30 m	**R88A-CAGB030SR**
	40 m	**R88A-CAGB040SR**
	50 m	**R88A-CAGB050SR**
3,000-r/min Servomotors of 2 kW, 2,000-r/min Servomotors of 2 kW	3 m	**R88A-CAGC003SR**
	5 m	**R88A-CAGC005SR**
	10 m	**R88A-CAGC010SR**
	15 m	**R88A-CAGC015SR**
	20 m	**R88A-CAGC020SR**
	30 m	**R88A-CAGC030SR**
	40 m	**R88A-CAGC040SR**
	50 m	**R88A-CAGC050SR**
3,000-r/min Servomotors of 3 to 5 kW, 2,000-r/min Servomotors of 3 to 5 kW, 1,000-r/min Servomotors of 2 to 4.5 kW	3 m	**R88A-CAGD003SR**
	5 m	**R88A-CAGD005SR**
	10 m	**R88A-CAGD010SR**
	15 m	**R88A-CAGD015SR**
	20 m	**R88A-CAGD020SR**
	30 m	**R88A-CAGD030SR**
	40 m	**R88A-CAGD040SR**
	50 m	**R88A-CAGD050SR**

• Servomotor Power Cables (Robot Cables)

For Servomotor with brake

Specifications		Model
3,000-r/min Servomotors of 1 to 1.5 kW, 2,000-r/min Servomotors of 1 to 1.5 kW, 1,000-r/min Servomotors of 900 W	3 m	**R88A-CAGB003BR**
	5 m	**R88A-CAGB005BR**
	10 m	**R88A-CAGB010BR**
	15 m	**R88A-CAGB015BR**
	20 m	**R88A-CAGB020BR**
	30 m	**R88A-CAGB030BR**
	40 m	**R88A-CAGB040BR**
	50 m	**R88A-CAGB050BR**
3,000-r/min Servomotors of 2 kW, 2,000-r/min Servomotors of 2 kW	3 m	**R88A-CAGC003BR**
	5 m	**R88A-CAGC005BR**
	10 m	**R88A-CAGC010BR**
	15 m	**R88A-CAGC015BR**
	20 m	**R88A-CAGC020BR**
	30 m	**R88A-CAGC030BR**
	40 m	**R88A-CAGC040BR**
	50 m	**R88A-CAGC050BR**
3,000-r/min Servomotors of 3 to 5 kW, 2,000-r/min Servomotors of 3 to 5 kW, 1,000-r/min Servomotors of 2 to 4.5 kW	3 m	**R88A-CAGD003BR**
	5 m	**R88A-CAGD005BR**
	10 m	**R88A-CAGD010BR**
	15 m	**R88A-CAGD015BR**
	20 m	**R88A-CAGD020BR**
	30 m	**R88A-CAGD030BR**
	40 m	**R88A-CAGD040BR**
	50 m	**R88A-CAGD050BR**

• Brake Cables (Robot Cables)

Specifications		Model
3,000-r/min Servomotors of 50 to 750 W, 3,000-r/min Flat Servomotors of 100 to 400 W	3 m	**R88A-CAGA003BR**
	5 m	**R88A-CAGA005BR**
	10 m	**R88A-CAGA010BR**
	15 m	**R88A-CAGA015BR**
	20 m	**R88A-CAGA020BR**
	30 m	**R88A-CAGA030BR**
	40 m	**R88A-CAGA040BR**
	50 m	**R88A-CAGA050BR**

• Encoder Cables (Robot Cables)

Specifications		Model
3,000-r/min Servomotors of 50 to 750 W with an absolute encoder, 3,000-r/min Flat Servomotors of 100 to 400 W with an absolute encoder	3 m	**R88A-CRGA003CR**
	5 m	**R88A-CRGA005CR**
	10 m	**R88A-CRGA010CR**
	15 m	**R88A-CRGA015CR**
	20 m	**R88A-CRGA020CR**
	30 m	**R88A-CRGA030CR**
	40 m	**R88A-CRGA040CR**
	50 m	**R88A-CRGA050CR**
3,000-r/min Servomotors of 50 to 750 W with an incremental encoder, 3,000-r/min Flat Servomotors of 100 to 400 W with an incremental encoder	3 m	**R88A-CRGB003CR**
	5 m	**R88A-CRGB005CR**
	10 m	**R88A-CRGB010CR**
	15 m	**R88A-CRGB015CR**
	20 m	**R88A-CRGB020CR**
	30 m	**R88A-CRGB030CR**
	40 m	**R88A-CRGB040CR**
	50 m	**R88A-CRGB050CR**
3,000-r/min Servomotors of 1 to 5 kW, 2,000-r/min Servomotors of 1 to 5 kW, 1,500-r/min Servomotors of 7.5 kW, 1,000-r/min Servomotors of 900 W to 6 kW	3 m	**R88A-CRGC003NR**
	5 m	**R88A-CRGC005NR**
	10 m	**R88A-CRGC010NR**
	15 m	**R88A-CRGC015NR**
	20 m	**R88A-CRGC020NR**
	30 m	**R88A-CRGC030NR**
	40 m	**R88A-CRGC040NR**
	50 m	**R88A-CRGC050NR**

• Communications Cables

Specifications		Model
Personal Computer Monitor Cable RS-232 Communications	2 m	**R88A-CCG002P2**
RS-485 Communications Cable	0.5 m	**R88A-CCG0R5P4**
	1 m	**R88A-CCG001P4**

• Connectors

Specifications		Model
Servomotor Connector for Encoder Cable	Absolute Encoder	**R88A-CNG01R**
	Incremental Encoder	**R88A-CNG02R**
Control I/O Connector (CN1)		**R88A-CNU01C**
Encoder Connector (CN2)		**R88A-CNW01R**
Power Cable Connector (750 W max.)		**R88A-CNG01A**
Brake Cable Connector (750 W max.)		**R88A-CNG01B**

• Servo Relay Units (for CN1)

Specifications	Model
For CS1W-NC113/-NC133 For CJ1W-NC113/-NC133 For C200HW-NC113	**XW2B-20J6-1B**
For CS1W-NC213/-NC413/-NC233/-NC433 For CJ1W-NC213/-NC413/-NC233/-NC433 For C200HW-NC213/-NC413	**XW2B-40J6-2B**
For CJ1M-CPU21/-CPU22/-CPU23 (for 1 axis)	**XW2B-20J6-8A**
For CJ1M-CPU21/-CPU22/-CPU23 (for 2 axis)	**XW2B-40J6-9A**
For FQM1-MMA22 For FQM1-MMP22	**XW2B-80J7-12A**

• Servo Relay Unit Cables (for Servo Drives)

Specifications		Model
For CJ1M-CPU21/-CPU22/-CPU23 (XW2B-20J6-8A/XW2B-40J6-9A)	1 m	**XW2Z-100J-B31**
	2 m	**XW2Z-200J-B31**
For FQM1-MMA22 (XW2B-80J7-12A)	1 m	**XW2Z-100J-B27**
	2 m	**XW2Z-200J-B27**
For FQM1-MMP22 (XW2B-80J7-12A)	1 m	**XW2Z-100J-B26**
	2 m	**XW2Z-200J-B26**

Note: You cannot use a Servo Relay Unit Cable for line-receiver inputs (+CWLD: CN1 pin 44, -CWLD: CN1 pin 45, +CCWLD: CN1 pin 46, -CCWLD: CN1 pin 47).
Use a General-purpose Control Cable and wire the connector to match the controller.

• Servo Relay Unit Cables (for Position Control Units)

Specifications			Model
For CS1W-NC113, C200HW-NC113 (XW2B-20J6-1B)		0.5 m	**XW2Z-050J-A6**
		1 m	**XW2Z-100J-A6**
For CS1W-NC213/-NC413, C200HW-NC213/-NC413 (XW2B-20J6-2B)		0.5 m	**XW2Z-050J-A7**
		1 m	**XW2Z-100J-A7**
For CS1W-NC133 (XW2B-20J6-1B)		0.5 m	**XW2Z-050J-A10**
		1 m	**XW2Z-100J-A10**
For CS1W-NC233/-NC433 (XW2B-20J6-2B)		0.5 m	**XW2Z-050J-A11**
		1 m	**XW2Z-100J-A11**
For CJ1W-NC113 (XW2B-20J6-1B)		0.5 m	**XW2Z-050J-A14**
		1 m	**XW2Z-100J-A14**
For CJ1W-NC213/-NC413 (XW2B-20J6-2B)		0.5 m	**XW2Z-050J-A15**
		1 m	**XW2Z-100J-A15**
For CJ1W-NC133 (XW2B-20J6-1B)		0.5 m	**XW2Z-050J-A18**
		1 m	**XW2Z-100J-A18**
For CJ1W-NC233/-NC433 (XW2B-20J6-2B)		0.5 m	**XW2Z-050J-A19**
		1 m	**XW2Z-100J-A19**
For CJ1M-CPU21/-CPU22/-CPU23 (XW2B-20J6-8A/XW2B-40J6-9A)		0.5 m	**XW2Z-050J-A33**
		1 m	**XW2Z-100J-A33**
For FQM1-MMA22 (XW2B-80J7-12A)	General-purpose I/O	0.5 m	**XW2Z-050J-A28**
		1 m	**XW2Z-100J-A28**
		2 m	**XW2Z-200J-A28**
	Special I/O	0.5 m	**XW2Z-050J-A31**
		1 m	**XW2Z-100J-A31**
		2 m	**XW2Z-200J-A31**
For FQM1-MMP22 (XW2B-80J7-12A)	General-purpose I/O	0.5 m	**XW2Z-050J-A28**
		1 m	**XW2Z-100J-A28**
		2 m	**XW2Z-200J-A28**
	Special I/O	0.5 m	**XW2Z-050J-A30**
		1 m	**XW2Z-100J-A30**
		2 m	**XW2Z-200J-A30**

• Control Cables

Specifications		Model
Motion Control Unit Cables for 1 axis CS1W-MC221-V1/-MC421-V1	1 m	**R88A-CPG001M1**
	2 m	**R88A-CPG002M1**
	3 m	**R88A-CPG003M1**
	5 m	**R88A-CPG005M1**
Motion Control Unit Cables for 2 axes CS1W-MC221-V1/-MC421-V1	1 m	**R88A-CPG001M2**
	2 m	**R88A-CPG002M2**
	3 m	**R88A-CPG003M2**
	5 m	**R88A-CPG005M2**
General-purpose Control Cables with Connector on One End	1 m	**R88A-CPG001S**
	2 m	**R88A-CPG002S**
Connector-Terminal Block Cables	1 m	**XW2Z-100J-B24**
	2 m	**XW2Z-200J-B24**
Connector Terminal Block Conversion Unit	M3 screw type	**XW2B-50G4**
	M3.5 screw type	**XW2B-50G5**
	M3 screw type	**XW2D-50G6**

• External Regeneration Resistors

Specifications	Model
20 W, 50 Ω	**R88A-RR08050S**
20 W, 100 Ω	**R88A-RR080100S**
70 W, 47 Ω	**R88A-RR22047S**
500 W, 20 Ω	**R88A-RR50020S**

• Reactors

Specifications	Model
R88D-GTA5L/-GT01H	**3G3AX-DL2002**
R88D-GT01L/-GT02H	**3G3AX-DL2004**
R88D-GT02L/-GT04H	**3G3AX-DL2007**
R88D-GT04L/-GT08H/-GT10H	**3G3AX-DL2015**
R88D-GT15H	**3G3AX-DL2022**
R88D-GT08H/-GT10H/-GT15H	**3G3AX-AL2025**
R88D-GT20H/-GT30H	**3G3AX-AL2055**
R88D-GT50H	**3G3AX-AL2110**
R88D-GT75H	**3G3AX-AL2220**

• Mounting Brackets (L Brackets for Rack Mounting)

Specifications	Model
R88D-GTA5L/-GT01L/-GT01H/-GT02H	**R88A-TK01G**
R88D-GT02L/-GT04H	**R88A-TK02G**
R88D-GT04L/-GT08H	**R88A-TK03G**
R88D-GT10H/-GT15H	**R88A-TK04G**

• Parameter Unit

Specifications	Model
Parameter Unit	**R88A-PR02G**

Servo Drive-Servomotor Combinations

Only the Servomotor and Servo Drive combinations listed here can be used. Do not use other combinations.

● 3,000-r/min Sylindrical Servomotors and Servo Drives

Voltage	Servo Drive	Servomotor		
		Rated output	With incremental encoder	With absolute encoder
100 V	R88D-GTA5L	50 W	R88M-G05030H-□	R88M-G05030T-□
	R88D-GT01L	100 W	R88M-G10030L-□	R88M-G10030S-□
	R88D-GT02L	200 W	R88M-G20030L-□	R88M-G20030S-□
	R88D-GT04L	400 W	R88M-G40030L-□	R88M-G40030S-□
Single-phase 200 V	R88D-GT01H	50 W	R88M-G05030H-□	R88M-G05030T-□
	R88D-GT01H	100 W	R88M-G10030H-□	R88M-G10030T-□
	R88D-GT02H	200 W	R88M-G20030H-□	R88M-G20030T-□
	R88D-GT04H	400 W	R88M-G40030H-□	R88M-G40030T-□
Single-phase/ three-phase 200 V	R88D-GT08H	750 W	R88M-G75030H-□	R88M-G75030T-□
	R88D-GT15H	1 kW	—	R88M-G1K030T-□
	R88D-GT15H	1.5 kW	—	R88M-G1K530T-□
Three-phase 200 V	R88D-GT20H	2 kW	—	R88M-G2K030T-□
	R88D-GT30H	3 kW	—	R88M-G3K030T-□
	R88D-GT50H	4 kW	—	R88M-G4K030T-□
	R88D-GT50H	5 kW	—	R88M-G5K030T-□

● 3,000-r/min Flat Servomotors and Servo Drives

Voltage	Servo Drive	Servomotor		
		Rated output	With incremental encoder	With absolute encoder
100 V	R88D-GT01L	100 W	R88M-GP10030L-□	R88M-GP10030S-□
	R88D-GT02L	200 W	R88M-GP20030L-□	R88M-GP20030S-□
	R88D-GT04L	400 W	R88M-GP40030L-□	R88M-GP40030S-□
Single-phase 200 V	R88D-GT01H	100 W	R88M-GP10030H-□	R88M-GP10030T-□
	R88D-GT02H	200 W	R88M-GP20030H-□	R88M-GP20030T-□
	R88D-GT04H	400 W	R88M-GP40030H-□	R88M-GP40030T-□

● 2,000-r/min Sylindrical Servomotors and Servo Drives

Voltage	Servo Drive	Servomotor	
		Rated output	With absolute encoder
Single-phase/ three-phase 200 V	R88D-GT10H	1 kW	R88M-G1K020T-□
	R88D-GT15H	1.5 kW	R88M-G1K520T-□
Three-phase 200 V	R88D-GT20H	2 kW	R88M-G2K020T-□
	R88D-GT30H	3 kW	R88M-G3K020T-□
	R88D-GT50H	4 kW	R88M-G4K020T-□
	R88D-GT50H	5 kW	R88M-G5K020T-□
	R88D-GT75H	7.5 kW	R88M-G7K515T-□

● 1,000-r/min Sylindrical Servomotors and Servo Drives

Voltage	Servo Drive	Servomotor	
		Rated output	With absolute encoder
Single-phase/ three-phase 200 V	R88D-GT15H	900 W	R88M-G90010T-□
Three-phase 200 V	R88D-GT30H	2 kW	R88M-G2K010T-□
	R88D-GT50H	3 kW	R88M-G3K010T-□
	R88D-GT50H	4.5 kW	R88M-G4K510T-□
	R88D-GT75H	6 kW	R88M-G6K010T-□

Servomotor and Decelerator Combinations

● 3,000-r/min Cylindrical Servomotors

Motor model	1/5	1/11 (1/9 for flange size No.11)	1/21	1/33	1/45
R88M-G05030□	R88G-HPG11A05100B□ (Also used with R88M-G10030□)	R88G-HPG11A09050B□ (Gear ratio 1/9)	R88G-HPG14A21100B□ (Also used with R88M-G10030□)	R88G-HPG14A33050B□	R88G-HPG14A45050B□
R88M-G10030□	R88G-HPG11A05100B□	R88G-HPG14A11100B□	R88G-HPG14A21100B□	R88G-HPG20A33100B□	R88G-HPG20A45100B□
R88M-G20030□	R88G-HPG14A05200B□	R88G-HPG14A11200B□	R88G-HPG20A21200B□	R88G-HPG20A33200B□	R88G-HPG20A45200B□
R88M-G40030□	R88G-HPG14A05400B□	R88G-HPG20A11400B□	R88G-HPG20A21400B□	R88G-HPG32A33400B□	R88G-HPG32A45400B□
R88M-G75030□	R88G-HPG20A05750B□	R88G-HPG20A11750B□	R88G-HPG32A21750B□	R88G-HPG32A33750B□	R88G-HPG32A45750B□
R88M-G1K030T	R88G-HPG32A051K0B□	R88G-HPG32A111K0B□	R88G-HPG32A211K0B□	R88G-HPG32A331K0B□	R88G-HPG50A451K0B□
R88M-G1K530T	R88G-HPG32A052K0B□ (Also used with R88M-G2K030T)	R88G-HPG32A112K0B□ (Also used with R88M-G2K030T)	R88G-HPG32A211K5B□	R88G-HPG50A332K0B□ (Also used with R88M-G2K030T)	R88G-HPG50A451K5B□
R88M-G2K030T	R88G-HPG32A052K0B□	R88G-HPG32A112K0B□	R88G-HPG50A212K0B□	R88G-HPG50A332K0B□	–
R88M-G3K030T	R88G-HPG32A053K0B□	R88G-HPG50A113K0B□	R88G-HPG50A213K0B□	–	–
R88M-G4K030T	R88G-HPG32A054K0B□	R88G-HPG50A115K0B□ (Also used with R88M-G5K030T)	–	–	–
R88M-G5K030T	R88G-HPG50A055K0B□	R88G-HPG50A115K0B□	–	–	–

● 3,000-r/min Flat Servomotors

Motor model	1/5	1/11	1/21	1/33	1/45
R88M-GP10030□	R88G-HPG11A05100PB□	R88G-HPG14A11100PB□	R88G-HPG14A21100PB□	R88G-HPG20A33100PB□	R88G-HPG20A45100PB□
R88M-GP20030□	R88G-HPG14A05200PB□	R88G-HPG20A11200PB□	R88G-HPG20A21200PB□	R88G-HPG20A33200PB□	R88G-HPG20A45200PB□
R88M-GP40030□	R88G-HPG20A05400PB□	R88G-HPG20A11400PB□	R88G-HPG20A21400PB□	R88G-HPG32A33400PB□	R88G-HPG32A45400PB□

● 2,000-r/min Cylindrical Servomotors

Motor model	1/5	1/11 (1/12 for flange size No.65)	1/21 (1/20 for flange size No.65)	1/33 (1/25 for flange size No.65)	1/45
R88M-G1K020T	R88G-HPG32A053K0B□ (Also used with R88M-G3K030T)	R88G-HPG32A112K0SB□ (Also used with R88M-G2K020T)	R88G-HPG32A211K0SB□	R88G-HPG50A332K0SB□ (Also used with R88M-G2K020T)	R88G-HPG50A451K0SB□
R88M-G1K520T	R88G-HPG32A053K0B□ (Also used with R88M-G3K030T)	R88G-HPG32A112K0SB□ (Also used with R88M-G2K020T)	R88G-HPG50A213K0B□ (Also used with R88M-G3K030T)	R88G-HPG50A332K0SB□ (Also used with R88M-G2K020T)	–
R88M-G2K020T	R88G-HPG32A053K0B□ (Also used with R88M-G3K030T)	R88G-HPG32A112K0SB□	R88G-HPG50A213K0B□ (Also used with R88M-G3K030T)	R88G-HPG50A332K0SB□	–
R88M-G3K020T	R88G-HPG32A054K0B□ (Also used with R88M-G4K030T)	R88G-HPG50A115K0B□ (Also used with R88M-G5K030T)	R88G-HPG50A213K0SB□	R88G-HPG65A253K0SB□	–
R88M-G4K020T	R88G-HPG50A054K0SB□	R88G-HPG50A114K0SB□	R88G-HPG65A204K0SB□	R88G-HPG65A254K0SB□	–
R88M-G5K020T	R88G-HPG50A055K0SB□	R88G-HPG50A115K0SB□	R88G-HPG65A205K0SB□	R88G-HPG65A255K0SB□	–
R88M-G7K515T	R88G-HPG65A057K5SB□	R88G-HPG65A127K5SB□	–	–	–

● 1,000-r/min Cylindrical Servomotors

Motor model	1/5	1/11 (1/12 for flange size No.65)	1/21 (1/20 for flange size No.65)	1/33 (1/25 for flange size No.65)
R88M-G90010T	R88G-HPG32A05900TB□	R88G-HPG32A11900TB□	R88G-HPG50A21900TB□	R88G-HPG50A33900TB□
R88M-G2K010T	R88G-HPG32A052K0TB□	R88G-HPG50A112K0TB□	R88G-HPG50A212K0TB□	R88G-HPG65A255K0SB□ (Also used with R88M-G5K020T)
R88M-G3K010T	R88G-HPG50A055K0SB□ (Also used with R88M-G5K020T)	R88G-HPG50A115K0SB□ (Also used with R88M-G5K020T)	R88G-HPG65A205K0SB□ (Also used with R88M-G5K020T)	R88G-HPG65A255K0SB□ (Also used with R88M-G5K020T)
R88M-G4K510T	R88G-HPG50A054K5TB□	R88G-HPG65A127K5SB□ (Also used with R88M-G7K515T)	R88G-HPG65A204K5TB□	–
R88M-G6K010T	R88G-HPG65A057K5SB□ (Also used with R88M-G7K515T)	R88G-HPG65A127K5SB□ (Also used with R88M-G7K515T)	–	–

Servo Relay Units and Cables

● Servo Relay Units and Cables

Select the Servo Relay Unit and Cable according to the model number of the Position Control Unit being used.

Position Control Unit	Position Control Unit Cable		Servo Relay Unit	Servo Drive Cable
CS1W-NC113	XW2Z-□□□J-A6		XW2B-20J6-1B	XW2Z-□□□J-B25
C200HW-NC113				
CS1W-NC213	XW2Z-□□□J-A7		XW2B-40J6-2B	
CS1W-NC413				
C200HW-NC213				
C200HW-NC413				
CS1W-NC133	XW2Z-□□□J-A10		XW2B-20J6-1B	
CS1W-NC233	XW2Z-□□□J-A11		XW2B-40J6-2B	
CS1W-NC433				
CJ1W-NC113	XW2Z-□□□J-A14		XW2B-20J6-1B	
CJ1W-NC213	XW2Z-□□□J-A15		XW2B-40J6-2B	
CJ1W-NC413				
CJ1W-NC133	XW2Z-□□□J-A18		XW2B-20J6-1B	
CJ1W-NC233	XW2Z-□□□J-A19		W2B-40J6-2B	
CJ1W-NC433				
CJ1M-CPU21	XW2Z-□□□J-A33		XW2B-20J6-8A (for 1 axes)	XW2Z-□□□J-B31
CJ1M-CPU22				
CJ1M-CPU23			XW2B-40J6-9A (for 2 axes)	
FQM1-MMP22	General-purpose I/O	XW2Z-□□□J-A28	XW2B-80J7-12A	XW2Z-□□□J-B26
	Special I/O	XW2Z-□□□J-A30		
FQM1-MMA22	General-purpose I/O	XW2Z-□□□J-A28		XW2Z-□□□J-B27
	Special I/O	XW2Z-□□□J-A31		

Note: 1. Insert the cable length into the boxes in the model number (□□□). Position Control Unit cables come in two lengths: 0.5 m and 1 m (some are also available in lengths of 2 m). Servo Driver Cables also come in two lengths: 1 m and 2 m.
Note: 2. Two Servo Driver Cables are required if 2-axis control is performed using one Position Control Unit.
Note: 3. Direct cable is available for CJ1W-NC□□4 Position Control Unit (High-Speed type).

Specifications	The number of axes	Model
For CJ1W-NC214/-NC414 (open collector output type)	1 axis	XW2Z-□□□J-G13
For CJ1W-NC214/-NC414 (open collector output type)	2 axis	XW2Z-□□□J-G5
For CJ1W-NC234/-NC434 (line-driver output type)	1 axis	XW2Z-□□□J-G9
For CJ1W-NC234/-NC434 (line-driver output type)	2 axis	XW2Z-□□□J-G1

Motion Control Unit Cables

● Motion Control Unit Cable

There are special cables for 1-axis and 2-axis Motion Control Unit operation. Select the appropriate cable for the number of axes to be connected.

Motion Control Unit	Cable		Remarks
CS1W-MC221-V1/421-V1	For 1 axis	R88A-CPG□□□M1	The □□□ digits in the model number indicate the cable length. Motion Control Unit Cables come in four lengths: 1 m, 2 m, 3 m, and 5 m. Example model number for 2-m 1-axis cable: R88A-CPG002M1
	For 2 axes	R88A-CPG□□□M2	

Cable Combinations

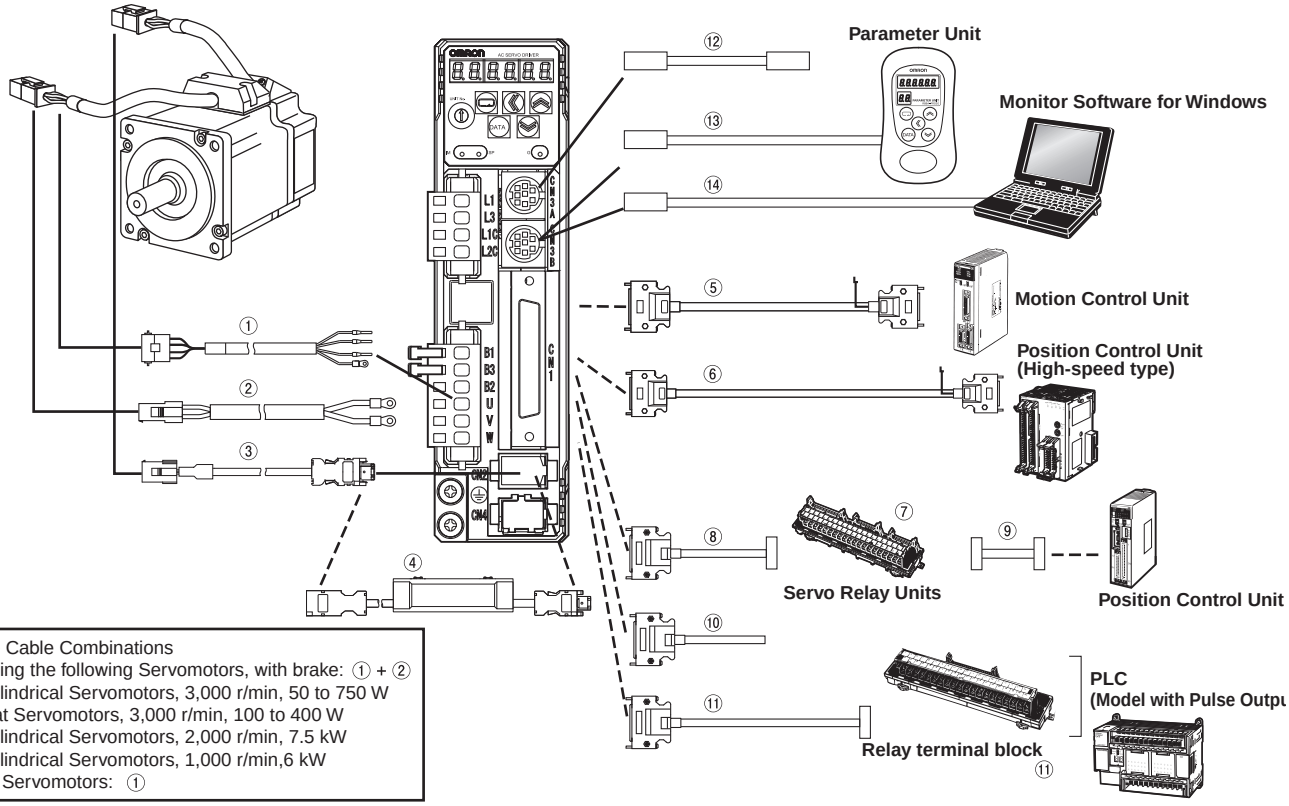

● Power Supply Cables (for CNB) (SR Connection Cables)

Symbol	Name	Connected to	Model	Description
①	Standard Servomotor Power Cables for Servomotors without Brakes	Cylindrical Servomotors, 3,000 r/min, 50 to 750 W Flat Servomotors, 3,000 r/min, 100 to 400 W	R88A-CAGA□□□S The empty boxes in the model number are for the cable length. The cable can be 3, 5, 10, 15, 20, 30, 40, or 50 m long.	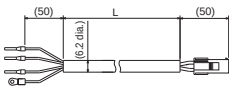 **[Servomotor Connector]** Connector: 172159-1 (Tyco Electronics AMP KK) Connector pins: 170362-1 (Tyco Electronics AMP KK) 170366-1 (Tyco Electronics AMP KK)
		Cylindrical Servomotors, 3,000 r/min, 1 to 1.5 kW Cylindrical Servomotors, 2,000 r/min, 1 to 1.5 kW Cylindrical Servomotors, 1,000 r/min, 900 W	R88A-CAGB□□□S The empty boxes in the model number are for the cable length. The cable can be 3, 5, 10, 15, 20, 30, 40, or 50 m long.	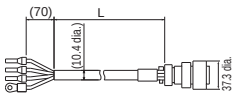 **[Servomotor Connector]** Straight plug: N/MS3106B20-4S (Japan Aviation Electronics Industry, Ltd.) Cable clamp: N/MS3057-12A (Japan Aviation Electronics Industry, Ltd.)
		Cylindrical Servomotors, 3,000 r/min, 2 kW Cylindrical Servomotors, 2,000 r/min, 2 kW	R88A-CAGC□□□S The empty boxes in the model number are for the cable length. The cable can be 3, 5, 10, 15, 20, 30, 40, or 50 m long.	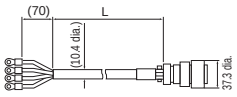 **[Servomotor Connector]** Straight plug: N/MS3106B20-4S (Japan Aviation Electronics Industry, Ltd.) Cable clamp: N/MS3057-12A (Japan Aviation Electronics Industry, Ltd.)
		Cylindrical Servomotors, 3,000 r/min, 3 to 5 kW Cylindrical Servomotors, 2,000 r/min, 3 to 5 kW Cylindrical Servomotors, 1,000 r/min, 2 to 4.5 kW	R88A-CAGD□□□S The empty boxes in the model number are for the cable length. The cable can be 3, 5, 10, 15, 20, 30, 40, or 50 m long.	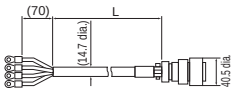 **[Servomotor Connector]** Straight plug: N/MS3106B22-22S (Japan Aviation Electronics Industry, Ltd.) Cable clamp: N/MS3057-12A (Japan Aviation Electronics Industry, Ltd.)
		Cylindrical Servomotors, 1,500 r/min, 7.5 kW Cylindrical Servomotors, 1,000 r/min, 6 kW	R88A-CAGE□□□S The empty boxes in the model number are for the cable length. The cable can be 3, 5, 10, 15, 20, 30, 40, or 50 m long.	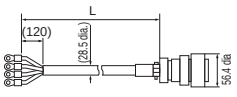 **[Servomotor Connector]** Straight plug: N/MS3106B32-17S (Japan Aviation Electronics Industry, Ltd.) Cable clamp: N/MS3057-20A (Japan Aviation Electronics Industry, Ltd.)

Symbol	Name	Connected to	Model	Description
①	Standard Servomotor Power Cables for Servomotors with Brakes	Cylindrical Servomotors, 3,000 r/min, 1 to 1.5 kW Cylindrical Servomotors, 2,000 r/min, 1 to 1.5 kW Cylindrical Servomotors, 1,000 r/min, 900 W	R88A-CAGB□□□B The empty boxes in the model number are for the cable length. The cable can be 3, 5, 10, 15, 20, 30, 40, or 50 m long.	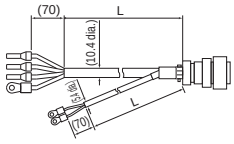 **[Servomotor Connector]** Straight plug: N/MS3106B20-18S (Japan Aviation Electronics Industry, Ltd.) Cable clamp: N/MS3057-12A (Japan Aviation Electronics Industry, Ltd.)
		Cylindrical Servomotors, 3,000 r/min, 2 kW Cylindrical Servomotors, 2,000 r/min, 2 kW	R88A-CAGC□□□B The empty boxes in the model number are for the cable length. The cable can be 3, 5, 10, 15, 20, 30, 40, or 50 m long.	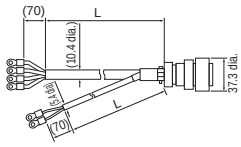 **[Servomotor Connector]** Straight plug: N/MS3106B20-18S (Japan Aviation Electronics Industry, Ltd.) Cable clamp: N/MS3057-12A (Japan Aviation Electronics Industry, Ltd.)
		Cylindrical Servomotors, 3,000 r/min, 3 to 5 kW Cylindrical Servomotors, 2,000 r/min, 3 to 5 kW Cylindrical Servomotors, 1,000 r/min, 2 to 4.5 kW	R88A-CAGD□□□B The empty boxes in the model number are for the cable length. The cable can be 3, 5, 10, 15, 20, 30, 40, or 50 m long.	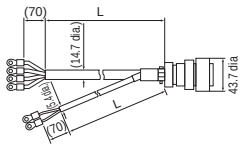 **[Servomotor Connector]** Straight plug: N/MS3106B24-11S (Japan Aviation Electronics Industry, Ltd.) Cable clamp: N/MS3057-16A (Japan Aviation Electronics Industry, Ltd.)
	Robot Servomotor Power Cables for Servomotors without Brakes	Cylindrical Servomotors, 3,000 r/min, 50 to 750 W Flat Servomotors, 3,000 r/min, 100 to 400 W	R88A-CAGA□□□SR The empty boxes in the model number are for the cable length. The cable can be 3, 5, 10, 15, 20, 30, 40, or 50 m long.	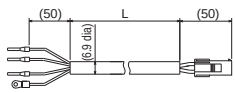 **[Servomotor Connector]** Connector: 172159-1 (Tyco Electronics AMP KK) Connector pins: 170362-1 (Tyco Electronics AMP KK) 170366-1 (Tyco Electronics AMP KK)
		Cylindrical Servomotors, 3,000 r/min, 1 to 1.5 kW Cylindrical Servomotors, 2,000 r/min, 1 to 1.5 kW Cylindrical Servomotors, 1,000 r/min, 900 W	R88A-CAGB□□□SR The empty boxes in the model number are for the cable length. The cable can be 3, 5, 10, 15, 20, 30, 40, or 50 m long.	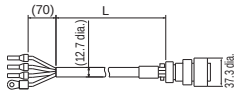 **[Servomotor Connector]** Straight plug: N/MS3106B20-4S (Japan Aviation Electronics Industry, Ltd.) Cable clamp: N/MS3057-12A (Japan Aviation Electronics Industry, Ltd.)
		Cylindrical Servomotors, 3,000 r/min, 2 kW Cylindrical Servomotors, 2,000 r/min, 2 kW	R88A-CAGC□□□SR The empty boxes in the model number are for the cable length. The cable can be 3, 5, 10, 15, 20, 30, 40, or 50 m long.	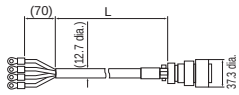 **[Servomotor Connector]** Straight plug: N/MS3106B20-4S (Japan Aviation Electronics Industry, Ltd.) Cable clamp: N/MS3057-12A (Japan Aviation Electronics Industry, Ltd.)
		Cylindrical Servomotors, 3,000 r/min, 3 to 5 kW Cylindrical Servomotors, 2,000 r/min, 3 to 5 kW Cylindrical Servomotors, 1,000 r/min, 2 to 4.5 kW	R88A-CAGD□□□SR The empty boxes in the model number are for the cable length. The cable can be 3, 5, 10, 15, 20, 30, 40, or 50 m long.	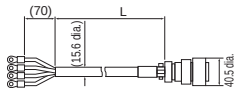 **[Servomotor Connector]** Straight plug: N/MS3106B22-22S (Japan Aviation Electronics Industry, Ltd.) Cable clamp: N/MS3057-12A (Japan Aviation Electronics Industry, Ltd.)
	Robot Servomotor Power Cables for Servomotors with Brakes	Cylindrical Servomotors, 3,000 r/min, 1 to 1.5 kW Cylindrical Servomotors, 2,000 r/min, 1 to 1.5 kW Cylindrical Servomotors, 1,000 r/min, 900 W	R88A-CAGB□□□BR The empty boxes in the model number are for the cable length. The cable can be 3, 5, 10, 15, 20, 30, 40, or 50 m long.	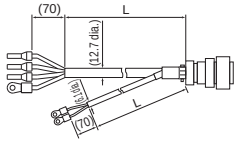 **[Servomotor Connector]** Straight plug: N/MS3106B20-18S (Japan Aviation Electronics Industry, Ltd.) Cable clamp: N/MS3057-12A (Japan Aviation Electronics Industry, Ltd.)
		Cylindrical Servomotors, 3,000 r/min, 2 kW Cylindrical Servomotors, 2,000 r/min, 2 kW	R88A-CAGC□□□BR The empty boxes in the model number are for the cable length. The cable can be 3, 5, 10, 15, 20, 30, 40, or 50 m long.	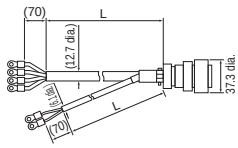 **[Servomotor Connector]** Straight plug: N/MS3106B20-18S (Japan Aviation Electronics Industry, Ltd.) Cable clamp: N/MS3057-12A (Japan Aviation Electronics Industry, Ltd.)
		Cylindrical Servomotors, 3,000 r/min, 3 to 5 kW Cylindrical Servomotors, 2,000 r/min, 3 to 5 kW Cylindrical Servomotors, 1,000 r/min, 2 to 4.5 kW	R88A-CAGD□□□BR The empty boxes in the model number are for the cable length. The cable can be 3, 5, 10, 15, 20, 30, 40, or 50 m long.	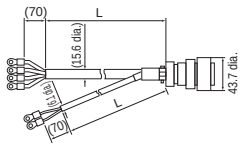 **[Servomotor Connector]** Straight plug: N/MS3106B24-11S (Japan Aviation Electronics Industry, Ltd.) Cable clamp: N/MS3057-16A (Japan Aviation Electronics Industry, Ltd.)

● Brake Cables

Symbol	Name	Connected to	Model	Description
②	Standard Brake Cables	Cylindrical Servomotors, 3,000 r/min, 50 to 750 W Flat Servomotors, 3,000 r/min, 100 to 400 W	R88A-CAGA□□□B The empty boxes in the model number are for the cable length. The cable can be 3, 5, 10, 15, 20, 30, 40, or 50 m long.	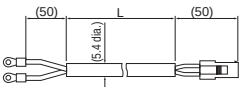 **[Servomotor Connector]** Connector: 172157-1 (Tyco Electronics AMP KK) Connector pins: 170362-1 (Tyco Electronics AMP KK) 170366-1 (Tyco Electronics AMP KK)
		Cylindrical Servomotors, 1,500 r/min, 7.5 kW Cylindrical Servomotors, 1,000 r/min, 6 kW	R88A-CAGE□□□B The empty boxes in the model number are for the cable length. The cable can be 3, 5, 10, 15, 20, 30, 40, or 50 m long.	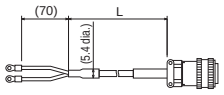 **[Servomotor Connector]** Straight plug: N/MS3106B14-2S (Japan Aviation Electronics Industry, Ltd.) Cable clamp: N/MS3057-6A (Japan Aviation Electronics Industry, Ltd.)
	Robot Brake Cables	Cylindrical Servomotors, 3,000 r/min, 50 to 750 W Flat Servomotors, 3,000 r/min, 100 to 400 W	R88A-CAGA□□□BR The empty boxes in the model number are for the cable length. The cable can be 3, 5, 10, 15, 20, 30, 40, or 50 m long.	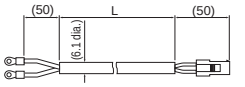 **[Servomotor Connector]** Connector: 172157-1 (Tyco Electronics AMP KK) Connector pins: 170362-1 (Tyco Electronics AMP KK) 170366-1 (Tyco Electronics AMP KK)

● Encoder Cables (for CN2)

Symbol	Name	Connected to	Model	Description
③	Standard Encoder Cables with Connectors	Cylindrical Servomotors, 3,000 r/min, 50 to 750 W, absolute encoder Flat Servomotors, 3,000 r/min, 100 to 400 W, absolute encoder	R88A-CRGA□□□C The empty boxes in the model number are for the cable length. The cable can be 3, 5, 10, 15, 20, 30, 40, or 50 m long.	**[Servo Drive Connector]** Connector: 3 to 20 m: Crimped I/O connector: (Molex Japan Co., Ltd.) 30 to 50 m: 55100-0670 (Molex Japan Co., Ltd.) Connector pins: 50639-8028 (Molex Japan Co., Ltd.) 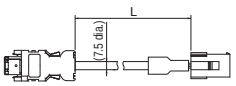 **[Servomotor Connector]** Connector: 172161-1 (Tyco Electronics AMP KK) Connector pins: 170365-1 (Tyco Electronics AMP KK) 171639-1 (Tyco Electronics AMP KK)
		Cylindrical Servomotors, 3,000 r/min, 50 to 750 W, incremental encoder Flat Servomotors, 3,000 r/min, 100 to 400 W, incremental encoder	R88A-CRGB□□□C The empty boxes in the model number are for the cable length. The cable can be 3, 5, 10, 15, 20, 30, 40, or 50 m long.	**[Servo Drive Connector]** Connector: 3 to 20 m: Crimped I/O connector: (Molex Japan Co., Ltd.) 30 to 50 m: 55100-0670 (Molex Japan Co., Ltd.) Connector pins: 50639-8028 (Molex Japan Co., Ltd.) 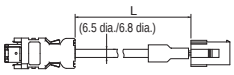 **[Servomotor Connector]** Connector: 172160-1 (Tyco Electronics AMP KK) Connector pins: 170365-1 (Tyco Electronics AMP KK) 171639-1 (Tyco Electronics AMP KK)
		Cylindrical Servomotors, 3,000 r/min,1 to 1.5 kW Cylindrical Servomotors, 2,000 r/min,1 to 5 kW Cylindrical Servomotors, 1,500 r/min, 7.5 kW Cylindrical Servomotors, 1,000 r/min, 900 W to 6 kW	R88A-CRGC□□□N The empty boxes in the model number are for the cable length. The cable can be 3, 5, 10, 15, 20, 30, 40, or 50 m long.	**[Servo Drive Connector]** Connector: 3 to 20 m: Crimped I/O connector: (Molex Japan Co., Ltd.) 30 to 50 m: 55100-0670 (Molex Japan Co., Ltd.) Connector pins: 50639-8028 (Molex Japan Co., Ltd.)  **[Servomotor Connector]** Straight plug: N/MS3106B20-29S (Japan Aviation Electronics Industry, Ltd.) Cable clamp: N/MS3057-12A (Japan Aviation Electronics Industry, Ltd.)
	Robot Encoder Cables with Connectors	Cylindrical Servomotors, 3,000 r/min,50 to 750 W, absolute encoder Flat Servomotors, 3,000 r/min, 100 to 400 W, absolute encoder	R88A-CRGA□□□CR The empty boxes in the model number are for the cable length. The cable can be 3, 5, 10, 15, 20, 30, 40, or 50 m long.	**[Servo Drive Connector]** Connector: Crimped I/O connector: (Molex Japan Co., Ltd.) Connector pins: 50639-8028 (Molex Japan Co., Ltd.) 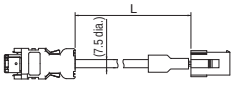 **[Servomotor Connector]** Connector: 172161-1 (Tyco Electronics AMP KK) Connector pins: 170365-1 (Tyco Electronics AMP KK)
		Cylindrical Servomotors, 3,000 r/min, 50 to 750 W, incremental encoder Flat Servomotors, 3,000 r/min, 100 to 400 W, incremental encoder	R88A-CRGB□□□CR The empty boxes in the model number are for the cable length. The cable can be 3, 5, 10, 15, 20, 30, 40, or 50 m long.	**[Servo Drive Connector]** Connector: Crimped I/O connector: (Molex Japan Co., Ltd.) Connector pins: 50639-8028 (Molex Japan Co., Ltd.) 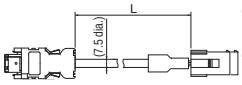 **[Servomotor Connector]** Connector: 172160-1 (Tyco Electronics AMP KK) Connector pins: 170365-1 (Tyco Electronics AMP KK)
		Cylindrical Servomotors, 3,000 r/min,1 to 1.5 kW Cylindrical Servomotors, 2,000 r/min,1 to 5 kW Cylindrical Servomotors, 1,500 r/min, 7.5 kW Cylindrical Servomotors, 1,000 r/min, 900 W to 6 kW	R88A-CRGC□□□NR The empty boxes in the model number are for the cable length. The cable can be 3, 5, 10, 15, 20, 30, 40, or 50 m long.	**[Servo Drive Connector]** Connector: Crimped I/O connector: (Molex Japan Co., Ltd.) Connector pins: 50639-8028 (Molex Japan Co., Ltd.) 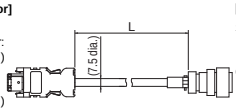 **[Servomotor Connector]** Straight plug: N/MS3106B20-29S (Japan Aviation Electronics Industry, Ltd.) Cable clamp: N/MS3057-12A (Japan Aviation Electronics Industry, Ltd.)

● Absolute Encoder Backup Battery and Absolute Encoder Battery Cable

Symbol	Name	Contents	Length (m)	Model	Description
④	Absolute Encoder Battery Cable	Battery not included.	0.3 m	R88A-CRGD0R3C	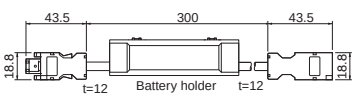
		One R88A-BAT01G Battery included.	0.3 m	R88A-CRGD0R3C-BS	
	Absolute Encoder Backup Battery	–	–	R88A-BAT01G	–

● Control Cables (for CN1)

Symbol	Name	Connected to		Model
⑤	Control Cables	Motion Control Units (for all CS1/C200H)		R88A-CPG□□□M♦ The empty boxes in the model number are for the cable length. The cable can be 1, 2, 3, or 5 m long. The empty diamond in the model number is for the number of axes. One axis: 1, Two axes: 2
⑥	Direct connection cable for Position Control Unit (High-speed type)	Line-driver output type (High-speed type) for CJ1W-NC234/434	For 1 axis	XW2Z-□□□J-G9 The empty boxes in the model number are for the cable length. The cable can be 1, 5, or 10 m long.
		Line-driver output type (High-speed type) for CJ1W-NC234/434	For 2 axis	XW2Z-□□□J-G1 The empty boxes in the model number are for the cable length. The cable can be 1, 5, or 10 m long.
		Open collector output type (High-speed type) for CJ1W-NC214/NC414	For 1 axis	XW2Z-□□□J-G13 The empty boxes in the model number are for the cable length. The cable can be 1, or 3 m long.
		Open collector output type (High-speed type) for CJ1W-NC214/NC414	For 2 axis	XW2Z-□□□J-G5 The empty boxes in the model number are for the cable length. The cable can be 1, or 3 m long.
⑦	Servo Relay Units	CJ1W-NC113/NC133 CS1W-NC113/NC133 (C200HW-NC113)		XW2B-20J6-1B
		CJ1W-NC213/NC233/NC413/NC433 CS1W-NC213/NC233/NC413/NC433 (C200HW-NC213/NC413)		XW2B-40J6-2B
		CJ1M-CPU21/CPU22/CPU23 (1 axis)		XW2B-20J6-8A
		CJ1M-CPU21/CPU22/CPU23 (2 axes)		XW2B-40J6-9A
		FQM1-MMA22 FQM1-MMP22		XW2B-80J7-12A
⑧	Servo Relay Unit Cables for Servo Drives	CJ1M-CPU21/-CPU22/-CPU23 (XW2B-20J6-8A and XW2B-40J6-9A)		XW2Z-□□□J-B31
		FQM1-MMA22 (XW2B-80J7-12A)		XW2Z-□□□J-B27 The empty boxes in the model number are for the cable length. The cable can be 1 or 2 m long.
		FQM1-MMP22 (XW2B-80J7-12A)		XW2Z-□□□J-B26 The empty boxes in the model number are for the cable length. The cable can be 1 or 2 m long.
⑨	Servo Relay Unit Cables for Position Control Units	CJ1W-NC133		XW2Z-□□□J-A18 The empty boxes in the model number are for the cable length. The cable can be 0.5 or 1 m long.
		CJ1W-NC233/NC433		XW2Z-□□□J-A19 The empty boxes in the model number are for the cable length. The cable can be 0.5 or 1 m long.
		CS1W-NC133		XW2Z-□□□J-A10 The empty boxes in the model number are for the cable length. The cable can be 0.5 or 1 m long.
		CS1W-NC233/NC433		XW2Z-□□□J-A11 The empty boxes in the model number are for the cable length. The cable can be 0.5 or 1 m long.
		CJ1W-NC113		XW2Z-□□□J-A14 The empty boxes in the model number are for the cable length. The cable can be 0.5 or 1 m long.
		CJ1W-NC213/NC413		XW2Z-□□□J-A15 The empty boxes in the model number are for the cable length. The cable can be 0.5 or 1 m long.
		CS1W-NC113 C200HW-NC113		XW2Z-□□□J-A6 The empty boxes in the model number are for the cable length. The cable can be 0.5 or 1 m long.
		CS1W-NC213/NC413 C200HW-NC213/NC413		XW2Z-□□□J-A7 The empty boxes in the model number are for the cable length. The cable can be 0.5 or 1 m long.
		CJ1M-CPU21/CPU22/CPU23		XW2Z-□□□J-A33 The empty boxes in the model number are for the cable length. The cable can be 0.5, 1, or 2 m long.
		FQM1-MMA22 FQM1-MMP22 (General-purpose I/O)		XW2Z-□□□J-A28 The empty boxes in the model number are for the cable length. The cable can be 0.5 or 1 m long.
		FQM1-MMA22 (Special I/O)		XW2Z-□□□J-A31 The empty boxes in the model number are for the cable length. The cable can be 0.5, 1, or 2 m long.
		FQM1-MMP22 (Special I/O)		XW2Z-□□□J-A30 The empty boxes in the model number are for the cable length. The cable can be 0.5, 1, or 2 m long.

Symbol	Name	Connected to	Model
⑩	General-purpose Control Cables	Cables for General-purpose Controllers	R88A-CPG□□□S The empty boxes in the model number are for the cable length. The cable can be 1 or 2 m long.
⑪	Connector Terminal Block Cables	Cables for General-purpose Controllers	XW2Z-□□□J-B24 The empty boxes in the model number are for the cable length. The cable can be 1 or 2 m long.
	Connector-Terminal Block Conversion Units	Conversion Unit for General-purpose Controllers (M3 screws)	XW2B-50G4
		Conversion Unit for General-purpose Controllers (M3.5 screws)	XW2B-50G5
		Conversion Unit for General-purpose Controllers (M3 screws)	XW2D-50G6

Note: Use the following codes in □□□ for the cable length: 0.5 m: 050, 1 m: 100, 2 m: 200, 3 m: 300, 5 m: 500, and 10 m:10M.
However, for General-purpose Control Cables, use “001” for a 1-m cable.

● Communications Connector (for CN3)

Symbol	Name	Contents	Length (m)	Model
⑫	RS485 Communications Cables	–	–	R88A-CCG□□□P4 The empty boxes in the model number are for the cable length. The cable can be 0.5 or 1 m long.
⑬	Parameter Unit	–	1.5 m	R88A-PR02G
⑭	Personal Computer Monitor Cable	for Windows RS232 Communications	2 m	R88A-CCG002P2

● Control Cables

Symbol	Name	Connected to	Model
–	Servomoteor Connector for Encoder Cable, absolute Encoder	for moter	R88A-CNG01R
–	Servomoteor Connector for Encoder Cable, Incremental Encoder	for moter	R88A-CNG02R
–	Control I/O Connector (CN1)	for drive	R88A-CNU01C
–	Encoder Connector (CN2)	–	R88A-CNW01R
–	Power Cable Connector (750 W max.)	–	R88A-CNG01A
–	Brake Cable Connector (750 W max.)	–	R88A-CNG01B

Servo Drive Specifications (R88D-GT)

● General Specifications

Item			Specifications
Ambient operating temperature and operating humidity			0 to 55°C, 90% RH max. (with no condensation)
Ambient storage temperature and storage humidity			–20 to 65°C, 90% RH max. (with no condensation)
Storage and operating atmosphere			No corrosive gasses
Vibration resistance			Smaller of either 10 to 60 Hz with double amplitude of 0.1 mm or acceleration of 5.88 m/s² max. in X, Y, and Z directions.
Impact resistance			Acceleration of 19.6 m/s² max. 2 times each in X, Y, and Z directions
Insulation resistance			Between power supply/power line terminals and frame ground: 0.5 MΩ min. (at 500 VDC)
Dielectric strength			Between power supply/power line terminals and frame ground: 1,500 VAC for 1 min at 50/60 Hz Between each control signal and frame ground: 500 VAC for 1 min
Protective structure			Built into panel (IP10).
International standards	EC Directives	EMC Directive	EN 55011 class A group 1
			EN 61000-6-2, IEC 61000-4-2/-3/-4/-5/-6/-11
		Low voltage Directive	EN 50178
	UL standards		UL 508C
	CSA standards		CSA C22.2 No.14
	Korean Radio Regulations (KC)		Certified

Note: 1. The above items reflect individual evaluation testing. The results may differ under compound conditions.
Note: 2. Always disconnect all connections to the Servo Drive before you perform insulation resistance tests on it. If you perform an insulation resistance test while the Servo Drive is connected, the Servo Drive may be damaged.
Never perform dielectric strength tests on the Servo Drive. Failure to follow this precaution may result in damaging internal elements.
Note: 3. Depending on the operating conditions, some Servo Drive parts will require maintenance.
Note: 4. The service life of the Servo Drive is 28,000 hours at an average ambient temperature of 55°C at 100% of the rated torque.

● Characteristics

Servo Drives with 100-VAC Input Power

Item				R88D-GTA5L	R88D-GT01L	R88D-GT02L	R88D-GT04L
Continuous output current (rms)				1.3 A	1.8 A	2.4 A	4.9 A
Momentary maximum output current (rms)				3.9 A	5.4 A	7.2 A	14.7 A
Input power supply	Main circuit	Power supply capacity		0.4 KVA	0.4 KVA	0.5 KVA	0.9 KVA
		Power supply voltage		Single-phase 100 to 115 VAC (85 to 127 V), 50/60 Hz			
		Rated current		1.4 A	2.2 A	3.7 A	6.6 A
	Control circuit	Power supply voltage		Single-phase 100 to 115 VAC (85 to 127 V), 50/60 Hz			
		Rated current		0.09 A	0.09 A	0.09 A	0.09 A
Heat generated	Main circuit			10.1 W	14.4 W	18.4 W	41.4 W
	Control circuit			4.4 W	4.4 W	4.4 W	4.4 W
Control method				All-digital servo			
Inverter method				IGBT-driven PWM method			
PWM frequency				12.0 kHz		6.0 kHz	
Weight				Approx. 0.8 kg	Approx. 0.8 kg	Approx. 1.1 kg	Approx. 1.5 kg
Maximum applicable motor capacity				50 W	100 W	200 W	400 W
Applicable Servomotors (R88M-)	3,000-r/min Servomotors		INC	G05030H	G10030L	G20030L	G40030L
			ABS	G05030T	G10030S	G20030S	G40030S
	3,000-r/min Flat Servomotors		INC	–	GP10030L	GP20030L	GP40030L
			ABS	–	GP10030S	GP20030S	GP40030S
	2,000-r/min Servomotors		ABS	–	–	–	–
	1,000-r/min Servomotors		ABS	–	–	–	–
Performance	Speed control range			1: 5000			
	Speed variability: Load characteristic			0.01% or less at 0% to 100% (at rated speed)			
	Speed variability: Voltage characteristic			0% at ±10% of rated voltage (at rated speed)			
	Speed variability: Temperature characteristic			±0.1% or less at 0 to 50°C (at rated speed)			
	Torque control reproducibility			±3%			

Servo Drives with Single-phase 200-VAC Input Power

Item				R88D-GT01H	R88D-GT02H	R88D-GT04H	R88D-GT08H	R88D-GT10H	R88D-GT15H
Continuous output current (rms)				1.16 A	1.6 A	2.7 A	4.0 A	5.9 A	9.8 A
Momentary maximum output current (rms)				3.5 A	5.3 A	7.1 A	14.1 A	21.2 A	28.3 A
Input power supply	Main circuit	Power supply capacity		0.5 KVA	0.5 KVA	0.9 KVA	1.3 KVA	1.8 KVA	2.3 KVA
		Power supply voltage		Single-phase 200 to 240 VAC (170 to 264 V), 50/60 Hz			Single-phase or three-phase 200 to 240 VAC (170 to 264 V), 50/60 Hz		
		Rated current		1.3 A	2.0 A	3.7 A	5.0/3.3 *1 A	7.5/4.1 *1 A	11/8.0 *1 A
	Control circuit	Power supply voltage		Single-phase 200 to 240 VAC (170 to 264 V), 50/60 Hz					
		Rated current		0.05 A	0.05 A	0.05 A	0.05 A	0.07 A	0.07 A
Heat generated	Main circuit			14.3 W	14.8 W	23.6 W	38.7 W	52.9 W	105.9 W
	Control circuit			4.5 W	4.5 W	4.5 W	4.3 W	6.1 W	6.1 W
PWM frequency				12.0 kHz		6.0 kHz			
Weight				Approx. 0.8 kg	Approx. 0.8 kg	Approx. 1.1 kg	Approx. 1.5 kg	Approx. 1.7 kg	Approx. 1.7 kg
Maximum applicable motor capacity				100 W	200 W	400 W	750 W	1 k W	1.5 kW
Applicable Servomotors (R88M-)	3,000-r/min Servomotors		INC	G05030H G10030H	G20030H	G40030H	G75030H	–	–
			ABS	G05030T G10030T	G20030T	G40030T	G75030T	–	G1K030T G1K530T
	3,000-r/min Flat Servomotors		INC	GP10030H	GP20030H	GP40030H	–	–	–
			ABS	GP10030T	GP20030T	GP40030T	–	–	–
	2,000-r/min Servomotors		ABS	–	–	–	–	G1K020T	G1K520T
	1,000-r/min Servomotors		ABS	–	–	–	–	–	G90010T
Control method				All-digital servo					
Inverter method				IGBT-driven PWM method					
Performance	Speed control range			1:5000					
	Speed variability: Load characteristic			0.01% or less at 0% to 100% (at rated speed)					
	Speed variability: Voltage characteristic			0% at ±10% of rated voltage (at rated speed)					
	Speed variability: Temperature characteristic			±0.1% or less at 0 to 50°C (at rated speed)					
	Torque control reproducibility			±3%					

*1. The left value is for single-phase input power and the right value is for three-phase input power.

Servo Drives with Three-phase 200-VAC Input Power

Item				R88D-GT20H	R88D-GT30H	R88D-GT50H	R88D-GT75H
Continuous output current (rms)				14.3 A	17.4 A	31.0 A	45.4 A
Momentary maximum output current (rms)				45.3 A	63.6 A	84.8 A	170.0 A
Input power supply	Main circuit	Power supply capacity		3.3 KVA	4.5 KVA	7.5 KVA	11 KVA
		Power supply voltage		Three-phase 200 to 230 VAC (170 to 253 V), 50/60 Hz			
		Rated current		10.2 A	15.2 A	23.7 A	35.0 A
	Control circuit	Power supply voltage		Single-phase 200 to 230 VAC (170 to 253 V), 50/60 Hz			
		Rated current		0.1 A	0.12 A	0.12 A	0.14 A
Heat generated	Main circuit			112.3 W	219.6 W	391.7 W	376.2 W
	Control circuit			10.7 W	13.3 W	13.3 W	13.8 W
PWM frequency				6.0 kHz			
Weight				Approx. 3.2 kg	Approx. 6.0 kg	Approx. 6.0 kg	Approx. 16.4 kg
Maximum applicable motor capacity				2 kW	3 kW	5 kW	7.5 kW
Applicable Servomotors (R88M-)	3,000-r/min Servomotors		INC	–	–	–	–
			ABS	G2K030T	G3K030T	G4K030T G5K030T	–
	3,000-r/min Flat Servomotors		INC	–	–	–	–
			ABS	–	–	–	–
	2,000-r/min Servomotors		ABS	G2K020T	G3K020T	G4K020T G5K020T	G7K515T
	1,000-r/min Servomotors		ABS	–	G2K010T	G3K010T G4K510T	G6K010T
Control method				All-digital servo			
Inverter method				IGBT-driven PWM method			
Performance	Speed control range			1:5000			
	Speed variability: Load characteristic			0.01% or less at 0% to 100% (at rated speed)			
	Speed variability: Voltage characteristic			0% at ±10% of rated voltage (at rated speed)			
	Speed variability: Temperature characteristic			±0.1% or less at 0 to 50°C (at rated speed)			
	Torque control reproducibility			±3%			

Servomotor Specifications (R88M-G)

● General Specifications

Item			3,000-r/min Servomotors		3,000-r/min Flat Servomotors	1,000-r/min Servomotors 2,000-r/min Servomotors	
			50 to 750 W	1 to 5 kW		900 W to 5 kW	6 to 7.5 kW
Ambient operating temperature and humidity			0 to 40°C, 85% RH max. (with no condensation)				
Ambient storage temperature and humidity			–20 to 65°C, 85% RH max. (with no condensation)	–20 to 80°C, 85% RH max. (with no condensation)			
Storage and operating atmosphere			No corrosive gases				
Vibration resistance *1			10 to 2,500 Hz and acceleration of 49 m/s² max. in the X, Y, and Z directions	10 to 2,500 Hz and acceleration of 24.5 m/s² max. in the X, Y, and Z directions	10 to 2,500 Hz and acceleration of 49 m/s² max. in the X, Y, and Z directions	10 to 2,500 Hz and acceleration of 24.5 m/s² max. in the X, Y, and Z directions	
Impact resistance			Acceleration of 98 m/s² max. 3 times each in the X, Y, and Z directions	Acceleration of 98 m/s² max. 3 times each in the X, Y, and Z directions	Acceleration of 98 m/s² max. 3 times each in the X, Y, and Z directions	Acceleration of 98 m/s² max. 2 times vertically	
Insulation resistance			20 MΩ min. at 500 VDC between the power terminals and FG terminal				
Dielectric strength			1,500 VAC (50 or 60 Hz) for 1 minute between the power terminals and FG terminal				
Operating position			All directions				
Insulation grade			Type B	Type F	Type B	Type F	
Structure			Totally enclosed, self-cooling				
Protective structure			IP65 (excluding the output shaft rotating section and lead wire ends)				
Vibration grade			V-15				
Mounting method			Flange-mounting				
International standards	EC Directives	Low voltage Directive	IEC 60034-1/-5				
	UL standards		UL1004-1				–
	CSA standards		CSA 22.2 No.100				

*1. The amplitude may be amplified by mechanical resonance. Do not exceed 80% of the specified value for extended periods of time.

Note: 1. Do not use the cable when it is laying in oil or water.
Note: 2. Do not expose the cable outlet or connections to stress due to bending or the weight of the cable itself.
Note: 3. Always disconnect all connections to the Servo Drive before you perform insulation resistance tests on it. If you perform an insulation resistance test while the Servo Drive is connected, the Servo Drive may be damaged.
Never perform dielectric strength tests on the Servo Drive. Failure to follow this precaution may result in damaging internal elements.

Servomoter Specifications (R88M-G)

● Characteristics

3,000-r/min Cylindrical Servomotors

100-VAC Input Power

Item	Model (R88M-) / Unit	G05030H / G05030T	G10030L / G10030S	G20030L / G20030S	G40030L / G40030S
Rated output *1	W	50	100	200	400
Rated torque *1	N·m	0.16	0.32	0.64	1.3
Rated rotation speed	r/min	3000			
Max. momentary rotation speed	r/min	5000			
Max. momentary torque *1	N·m	0.45	0.93	1.78	3.6
Rated current *1	A (rms)	1.1	1.7	2.5	4.6
Max. momentary current *1	A (rms)	3.4	5.1	7.6	13.9
Rotor inertia	kg·m² (GD²/4)	2.5×10^{-6}	5.1×10^{-6}	1.4×10^{-5}	2.6×10^{-5}
Applicable load inertia	—	30 times the rotor inertia max. *2			
Torque constant *1	N·m/A	0.14	0.19	0.26	0.28
Power rate *1	kW/s	10.4	20.1	30.3	62.5
Mechanical time constant	ms	1.56	1.11	0.72	0.55
Electrical time constant	ms	0.7	0.8	2.5	2.9
Allowable radial load *3	N	68	68	245	245
Allowable thrust load *3	N	58	58	98	98
Weight: Without brake	kg	Approx. 0.3	Approx. 0.5	Approx. 0.8	Approx. 1.2
Weight: With brake	kg	Approx. 0.5	Approx. 0.7	Approx. 1.3	Approx. 1.7
Radiation shield dimensions (material)		100 × 80 × t10 (Al)		130 × 120 × t12 (Al)	
Applicable Servo Drives (R88D-)		GTA5L	GT01L	GT02L	GT04L
Brake specifications: Brake inertia	kg·m² (GD²/4)	2×10^{-7}	2×10^{-7}	1.8×10^{-6}	1.8×10^{-6}
Brake specifications: Excitation voltage *4	V	24 VDC ±5%			
Brake specifications: Power consumption (at 20°C)	W	7	7	9	9
Brake specifications: Current consumption (at 20°C)	A	0.3	0.3	0.36	0.36
Brake specifications: Static friction torque	N·m	0.29 min.	0.29 min.	1.27 min.	1.27 min.
Brake specifications: Attraction time *5	ms	35 max.	35 max.	50 max.	50 max.
Brake specifications: Release time *5	ms	20 max.	20 max.	15 max.	15 max.
Brake specifications: Backlash		±1°			
Brake specifications: Allowable work per braking	J	39.2	39.2	137	137
Brake specifications: Allowable total work	J	4.9×10^{3}	4.9×10^{3}	44.1×10^{3}	44.1×10^{3}
Brake specifications: Allowable angular acceleration	rad/s²	30,000 max. (Speed of 2,800 r/min or more must not be changed in less than 10 ms)			
Brake specifications: Brake life	—	10,000,000 operations min.			
Brake specifications: Rating	—	Continuous			
Brake specifications: Insulation grade	—	Type F			

*1. These are the values when the Servomotor is combined with a Servo Drive at room temperature (20°C, 65%). The maximum momentary torque shown above indicates the standard value.

*2. Applicable Load Inertia:
- The operable load inertia ratio (load inertia/rotor inertia) depends on the mechanical configuration and its rigidity. For a machine with high rigidity, operation is possible even with high load inertia. Select an appropriate motor and confirm that operation is possible.
- If the dynamic brake is activated frequently with high load inertia, the dynamic brake resistor may burn. Do not repeatedly turn the Servomotor ON and OFF while the dynamic brake is enabled.
- The dynamic brake is designed only for emergency stops. Design the system so that the Servomotor remains stopped for at least 3 minutes after applying the dynamic brake. Otherwise the dynamic brake circuits may fail.

*3. The allowable radial and thrust loads are the values determined for a service life of 20,000 hours at normal operating temperatures. The allowable radial loads are applied as shown in the following diagram.

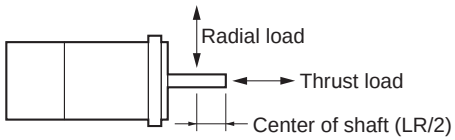

*4. This is an OFF brake. (It is reset when excitation voltage is applied).

*5. The operation time is the value (reference value) measured with a surge suppressor (CR50500 manufactured by Okaya Electric Industries Co., Ltd.).

Torque and Rotation Speed Characteristics

3,000-r/min Cylindrical Servomotors

- **3,000-r/min Servomotors with 100-VAC Power Input**

The following graphs show the characteristics with a 3-m standard cable and a 100-VAC input.

R88M-G05030H/T (50 W)

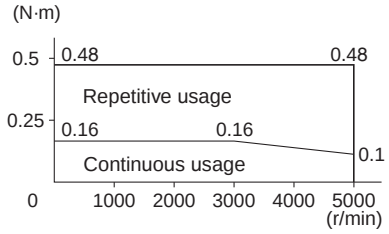

R88M-G10030L/S (100 W)

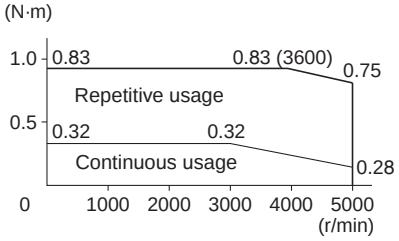

R88M-G20030L/S (200 W)

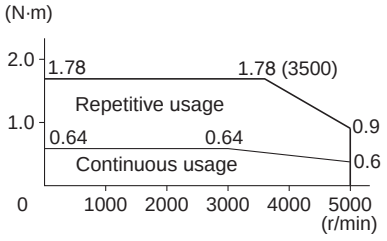

R88M-G40030L/S (400 W)

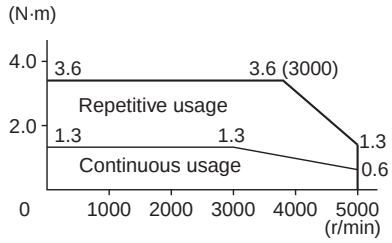

Servomotor Specifications (R88M-G)

● Characteristics

3,000-r/min Cylindrical Servomotors

200-VAC Input Power

Item		Unit	Model (R88M-) G05030H / G05030T	G10030H / G10030T	G20030H / G20030T	G40030H / G40030T	G75030H / G75030T	– / G1K030T	– / G1K530T	– / G2K030T	– / G3K030T	– / G4K030T	– / G5K030T
Rated output t *1		W	50	100	200	400	750	1000	1500	2000	3000	4000	5000
Rated torque *1		N·m	0.16	0.32	0.64	1.3	2.4	3.18	4.77	6.36	9.54	12.6	15.8
Rated rotation speed		r/min	3000										
Max. momentary rotation speed		r/min	5000				4500	5000				4500	
Max. momentary torque *1		N·m	0.45	0.90	1.78	3.67	7.05	9.1	12.8	18.4	27.0	36.3	45.1
Rated current *1		A (rms)	1.1	1.1	1.6	2.6	4	7.2	9.4	13	18.6	24.7	28.5
Max. momentary current *1		A (rms)	3.4	3.4	4.9	7.9	12.1	21.4	28.5	40	57.1	75	85.7
Rotor inertia		kg·m² (GD²/4)	2.5×10^{-6}	5.1×10^{-6}	1.4×10^{-5}	2.6×10^{-5}	8.7×10^{-5}	1.69×10^{-4}	2.59×10^{-4}	3.46×10^{-4}	6.77×10^{-4}	1.27×10^{-3}	1.78×10^{-3}
Applicable load inertia		–	30 times the rotor inertia max. *2				20 times the rotor inertia max. *2	15 times the rotor inertia max. *2					
Torque constant *1		N·m/A	0.14	0.19	0.41	0.51	0.64	0.44	0.51	0.48	0.51	0.51	0.57
Power rate *1		kW/s	10.4	20.1	30.3	62.5	66	60	88	117	134	125	140
Mechanical time constant		ms	1.56	1.1	0.71	0.52	0.45	0.78	0.54	0.53	0.46	0.51	0.46
Electrical time constant		ms	0.7	0.79	2.6	3	4.6	6.7	10	10.8	20	20	20
Allowable radial load *3		N	68	68	245	245	392	392	490	490	490	784	784
Allowable thrust load *3		N	58	58	98	98	147	147	196	196	196	343	343
Weight	Without brake	kg	Approx. 0.3	Approx. 0.5	Approx. 0.8	Approx. 1.2	Approx. 2.3	Approx. 4.5	Approx. 5.1	Approx. 6.5	Approx. 9.3	Approx. 12.9	Approx. 17.3
	With brake	kg	Approx. 0.5	Approx. 0.7	Approx. 1.3	Approx. 1.7	Approx. 3.1	Approx. 5.1	Approx. 6.5	Approx. 7.9	Approx. 11	Approx. 14.8	Approx. 19.2
Radiation shield dimensions (material)			100 × 80 × t10 (Al)		130 × 120 × t12 (Al)		170 × 160 × t12 (Al)		320 × 300 × t30 (Al)	320 × 300 × t20 (Al)	380 × 350 × t30 (Al)		
Applicable Servo Drives (R88D-)			GT01H	GT01H	GT02H	GT04H	GT08H	GT15H	GT15H	GT20H	GT30H	GT50H	GT50H
Brake specifications	Brake inertia	kg·m² (GD²/4)	2×10^{-7}	2×10^{-7}	1.8×10^{-6}	1.8×10^{-6}	7.5×10^{-6}	2.5×10^{-5}	3.3×10^{-5}	3.3×10^{-5}	3.3×10^{-5}	1.35×10^{-4}	1.35×10^{-4}
	Excitation voltage *4	V	24 VDC ±5%					24 VDC ±10%					
	Power consumption (at 20°C)	W	7	7	9	9	10	18	19	19	19	22	22
	Current consumption (at 20°C)	A	0.3	0.3	0.36	0.36	0.42	0.74	0.81	0.81	0.81	0.9	0.9
	Static friction torque	N·m	0.29 min.	0.29 min.	1.27 min.	1.27 min.	2.45 min.	4.9 min.	7.8 min.	7.8 min.	11.8 min.	16.1 min.	16.1 min.
	Attraction time *5	ms	35 max.	35 max.	50 max.	50 max.	70 max.	50 max.	50 max.	50 max.	80 max.	110 max.	110 max.
	Release time *5	ms	20 max.	20 max.	15 max.	15 max.	20 max.	15 max.	15 max.	15 max.	15 max.	50 max.	50 max.
	Backlash		±1°										
	Allowable work per braking	J	39.2	39.2	137	137	196	392	392	392	392	1470	1470
	Allowable total work	J	4.9×10^3	4.9×10^3	44.1×10^3	44.1×10^3	147×10^3	2.0×10^5	4.9×10^5	4.9×10^5	4.9×10^5	2.2×10^6	2.2×10^6
	Allowable angular acceleration	rad/s²	30,000 max. (Speed of 2,800 r/min or more must not be changed in less than 10 ms)					10,000 max. (Speed of 900 r/min or more must not be changed in less than 10 ms)					
	Brake life	–	10,000,000 operations min.										
	Rating	–	Continuous										
	Insulation grade	–	Type F										

*1. These are the values when the Servomotor is combined with a Servo Drive at room temperature (20°C, 65%). The maximum momentary torque shown above indicates the standard value.

*2. Applicable Load Inertia:
- The operable load inertia ratio (load inertia/rotor inertia) depends on the mechanical configuration and its rigidity. For a machine with high rigidity, operation is possible even with high load inertia. Select an appropriate motor and confirm that operation is possible.
- If the dynamic brake is activated frequently with high load inertia, the dynamic brake resistor may burn. Do not repeatedly turn the Servomotor ON and OFF while the dynamic brake is enabled.
- The dynamic brake is designed only for emergency stops. Design the system so that the Servomotor remains stopped for at least 3 minutes after applying the dynamic brake. Otherwise the dynamic brake circuits may fail.

*3. The allowable radial and thrust loads are the values determined for a service life of 20,000 hours at normal operating temperatures. The allowable radial loads are applied as shown in the following diagram.

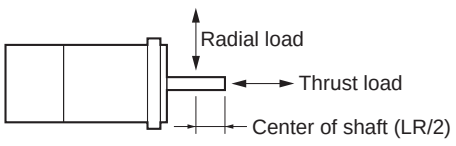

*4. This is an OFF brake. (It is reset when excitation voltage is applied).

*5. The operation time is the value (reference value) measured with a surge suppressor (CR50500 manufactured by Okaya Electric Industries Co., Ltd.).

Torque and Rotation Speed Characteristics

3,000-r/min Cylindrical Servomotors

- **3,000-r/min Servomotors with 200-VAC Power Input**

The following graphs show the characteristics with a 3-m standard cable and a 200-VAC input.

R88M-G05030H/T (50 W)

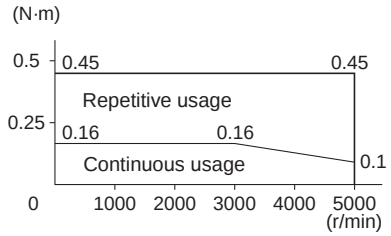

R88M-G10030H/T (100 W)

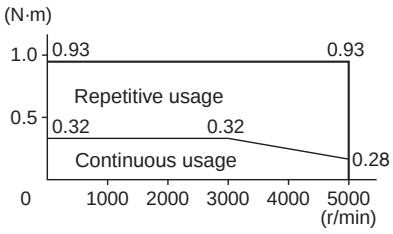

R88M-G20030H/T (200 W)

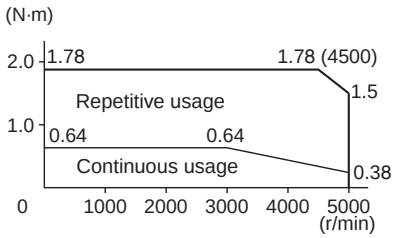

R88M-G40030H/T (400 W)

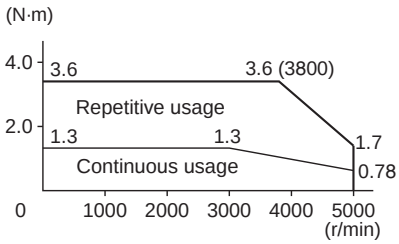

R88M-G75030H/T (750 W)

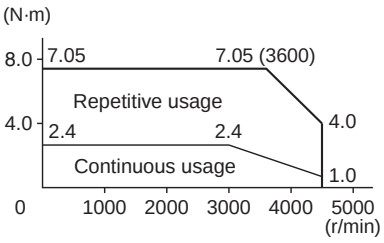

R88M-G1K030T (1 kW)

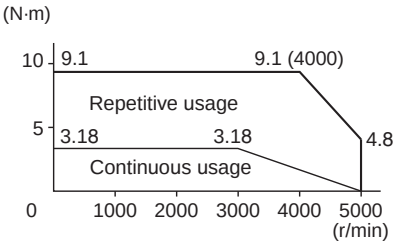

R88M-G1K530T (1.5 kW)

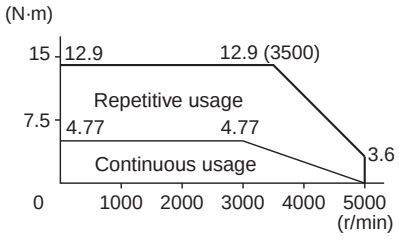

R88M-G2K030T (2 kW)

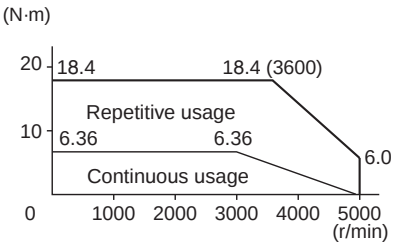

R88M-G3K030T (3 kW)

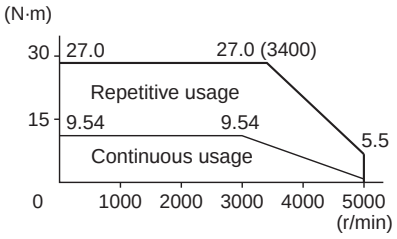

R88M-G4K030T (4 kW)

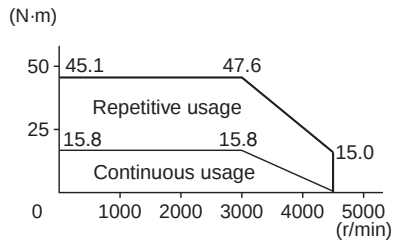

R88M-G5K030T (5 kW)

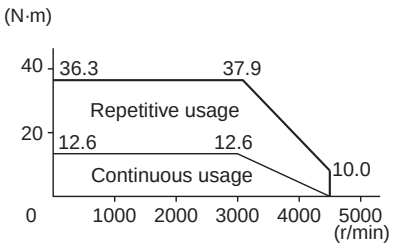

Servomotor Specifications (R88M-GP)

● Characteristics

3,000-r/min Flat Servomotors

Item		Unit	Model (R88M-)					
			100 VAC			200 VAC		
			GP10030L	GP20030L	GP40030L	GP10030H	GP20030H	GP40030H
			GP10030S	GP20030S	GP40030S	GP10030T	GP20030T	GP40030T
Rated output *1		W	100	200	400	100	200	400
Rated torque *1		N·m	0.32	0.64	1.3	0.32	0.64	1.3
Rated rotation speed		r/min	3000					
Max. momentary rotation speed		r/min	5000		4500	5000		
Max. momentary torque *1		N·m	0.84	1.8	3.6	0.86	1.8	3.65
Rated current *1		A (rms)	1.6	2.5	4.4	1	1.6	2.5
Max. momentary current *1		A (rms)	4.9	7.5	13.3	3.1	4.9	7.5
Rotor inertia		kg·m² (GD²/4)	1.0×10^{-5}	3.5×10^{-5}	6.5×10^{-5}	1.0×10^{-5}	3.5×10^{-5}	6.4×10^{-5}
Applicable load inertia		---	20 times the rotor inertia max.*2					
Torque constant *1		N·m/A	0.21	0.27	0.3	0.34	0.42	0.54
Power rate *1		kW/s	10.2	11.7	26.0	10.2	11.5	25.5
Mechanical time constant		ms	0.87	0.75	0.55	1.05	0.81	0.59
Electrical time constant		ms	3.4	6.7	6.7	2.9	5.6	6.6
Allowable radial load *3		N	68	245	245	68	245	245
Allowable thrust load *3		N	58	98	98	58	98	98
Weight	Without brake	kg	Approx. 0.7	Approx. 1.3	Approx. 1.8	Approx. 0.7	Approx. 1.3	Approx. 1.8
	With brake	kg	Approx. 0.9	Approx. 2	Approx. 2.5	Approx. 0.9	Approx. 2	Approx. 2.5
Radiation shield dimensions (material)			130 × 120 × t10 (Al)	170 × 160 × t12 (Al)		130 × 120 × t10 (Al)	170 × 160 × t12 (Al)	
Applicable Servo Drives (R88D-)			GT01L	GT02L	GT04L	GT01H	GT02H	GT04H
Brake specifications	Brake inertia	kg·m² (GD²/4)	3×10^{-6}	9×10^{-6}		3×10^{-6}	9×10^{-6}	
	Excitation voltage *4	V	24 VDC ±10%					
	Power consumption (at 20°C)	W	7	10		7	10	
	Current consumption (at 20°C)	A	0.29	0.41		0.29	0.41	
	Static friction torque	N·m	0.29 min.			0.29 min.	1.27 min.	
	Attraction time *5	ms	50 max.			50 max.	60 max.	
	Release time *5	ms	15 max.					
	Backlash		±1°					
	Allowable work per braking	J	137	196		137	196	
	Allowable total work	J	44.1×10^3	147×10^3		44.1×10^3	147×10^3	
	Allowable angular acceleration	rad/s²	10,000 max. (Speed of 900 r/min or more must not be changed in less than 10 ms)					
	Brake life	---	10,000,000 operations min.					
	Rating	---	Continuous			Continuous		
	Insulation grade	---	Type F					

*1. These are the values when the Servomotor is combined with a Servo Drive at room temperature (20°C, 65%). The maximum momentary torque shown above indicates the standard value.

*2. Applicable Load Inertia:
- The operable load inertia ratio (load inertia/rotor inertia) depends on the mechanical configuration and its rigidity. For a machine with high rigidity, operation is possible even with high load inertia. Select an appropriate motor and confirm that operation is possible.
- If the dynamic brake is activated frequently with high load inertia, the dynamic brake resistor may burn. Do not repeatedly turn the Servomotor ON and OFF while the dynamic brake is enabled.
- The dynamic brake is designed only for emergency stops. Design the system so that the Servomotor remains stopped for at least 3 minutes after applying the dynamic brake. Otherwise the dynamic brake circuits may fail.

*3. The allowable radial and thrust loads are the values determined for a service life of 20,000 hours at normal operating temperatures. The allowable radial loads are applied as shown in the following diagram.

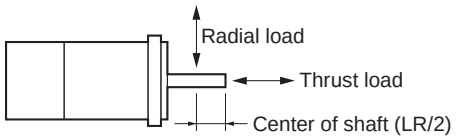

*4. This is an OFF brake. (It is reset when excitation voltage is applied).

*5. The operation time is the value (reference value) measured with a surge suppressor (CR50500 manufactured by Okaya Electric Industries Co., Ltd.).

Torque and Rotation Speed Characteristics

3,000-r/min Flat Servomotors

- **3,000-r/min Servomotors with 100-VAC Power Input**

The following graphs show the characteristics with a 3-m standard cable and a 100-VAC input.

R88M-GP10030L/S (100 W)

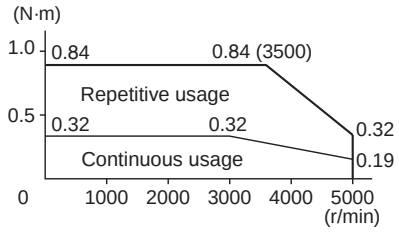

R88M-GP20030L/S (200 W)

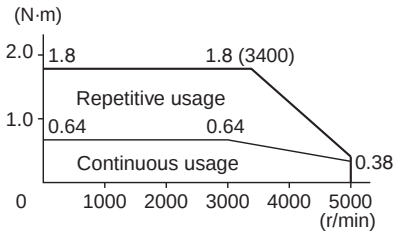

R88M-GP40030L/S (400 W)

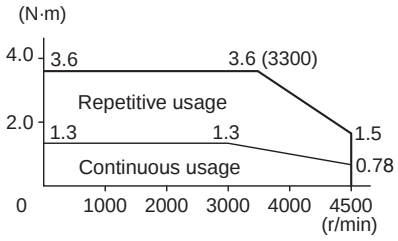

- **3,000-r/min Servomotors with 200-VAC Power Input**

The following graphs show the characteristics with a 3-m standard cable and a 200-VAC input.

R88M-GP10030H/T (100 W)

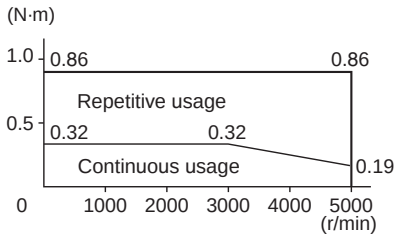

R88M-GP20030H/T (200 W)

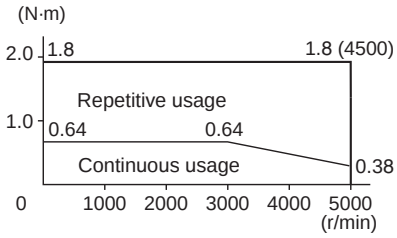

R88M-GP40030H/T (400 W)

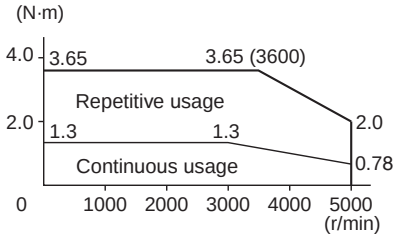

Servomotor Specifications (R88M-G)

● Characteristics

2,000-r/min Cylindrical Servomotors

200-VAC Input Power

Item	Model (R88M-) / Unit	G1K020T	G1K520T	G2K020T	G3K020T	G4K020T	G5K020T	G7K515T
Rated output *1	W	1000	1500	2000	3000	4000	5000	7500
Rated torque *1	N·m	4.8	7.15	9.54	14.3	18.8	23.8	48
Rated rotation speed	r/min	2000						1500
Max. momentary rotation speed	r/min	3000						2000
Max. momentary torque *1	N·m	13.5	19.6	26.5	41.2	54.9	70.6	111
Rated current *1	A (rms)	5.6	9.4	12.3	17.8	23.4	28	46.6
Max. momentary current *1	A (rms)	17.1	28.5	37.1	54.2	71.4	85.7	117.8
Rotor inertia	kg·m² (GD²/4)	6.17×10^{-4}	1.12×10^{-3}	1.52×10^{-3}	2.23×10^{-3}	4.25×10^{-3}	6.07×10^{-3}	8.9×10^{-3}
Applicable load inertia	—	10 times the rotor inertia max. *2						
Torque constant *1	N·m/A	0.88	0.76	0.78	0.81	0.81	0.85	1.03
Power rate *1	kW/s	37.3	45.8	60	91.6	83.2	93.5	230
Mechanical time constant	ms	0.7	0.81	0.75	0.72	1	0.9	0.71
Electrical time constant	ms	18	19	21	20	24	32	34
Allowable radial load *3	N	490	490	490	784	784	784	1176
Allowable thrust load *3	N	196	196	196	343	343	343	490
Weight: Without brake	kg	Approx. 6.8	Approx. 8.5	Approx. 10.6	Approx. 14.6	Approx. 18.8	Approx. 25	Approx. 41
Weight: With brake	kg	Approx. 8.7	Approx. 10.1	Approx. 12.5	Approx. 16.5	Approx. 21.3	Approx. 28.5	Approx. 45
Radiation shield dimensions (material)		275 × 260 × t15 (Al)			380 × 350 × t30 (Al)	470 × 440 × t30 (Al)		
Applicable Servo Drives (R88D-)		GT10H	GT15H	GT20H	GT30H	GT50H	GT50H	GT75H
Brake specifications: Brake inertia	kg·m² (GD²/4)	1.35×10^{-4}				4.25×10^{-4}	4.7×10^{-4}	4.7×10^{-4}
Brake specifications: Excitation voltage *4	V	24 VDC ±10%						
Brake specifications: Power consumption (at 20°C)	W	14	19	19	22	26	31	34
Brake specifications: Current consumption (at 20°C)	A	0.59	0.79	0.79	0.9	1.1	1.3	1.4
Brake specifications: Static friction torque	N·m	4.9 min.	13.7 min.	13.7 min.	16.1 min.	21.5 min.	24.5 min.	58.8 min.
Brake specifications: Attraction time *5	ms	80 max.	100 max.	100 max.	110 max.	90 max.	80 max.	150 max.
Brake specifications: Release time *5	ms	70 max.	50 max.	50 max.	50 max.	35 min.	25 min.	50 max.
Brake specifications: Backlash		±1°						
Brake specifications: Allowable work per braking	J	588	1176	1176	1170	1078	1372	1372
Brake specifications: Allowable total work	J	7.8×10^5	1.5×10^6	1.5×10^6	2.2×10^6	2.5×10^6	2.9×10^6	2.9×10^6
Brake specifications: Allowable angular acceleration	rad/s²	10,000 max. (Speed of 900 r/min or more must not be changed in less than 10 ms)						
Brake specifications: Brake life	—	10,000,000 operations min.						
Brake specifications: Rating	—	Continuous						
Brake specifications: Insulation grade	—	Type F						

*1. These are the values when the Servomotor is combined with a Servo Drive at room temperature (20°C, 65%). The maximum momentary torque shown above indicates the standard value.

*2. Applicable Load Inertia:
- The operable load inertia ratio (load inertia/rotor inertia) depends on the mechanical configuration and its rigidity. For a machine with high rigidity, operation is possible even with high load inertia. Select an appropriate motor and confirm that operation is possible.
- If the dynamic brake is activated frequently with high load inertia, the dynamic brake resistor may burn. Do not repeatedly turn the Servomotor ON and OFF while the dynamic brake is enabled.
- The dynamic brake is designed only for emergency stops. Design the system so that the Servomotor remains stopped for at least 3 minutes after applying the dynamic brake. Otherwise the dynamic brake circuits may fail.

*3. The allowable radial and thrust loads are the values determined for a service life of 20,000 hours at normal operating temperatures. The allowable radial loads are applied as shown in the following diagram.

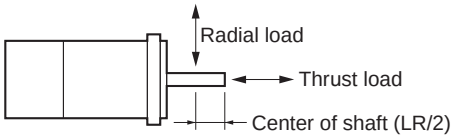

*4. This is an OFF brake. (It is reset when excitation voltage is applied).

*5. The operation time is the value (reference value) measured with a surge suppressor (CR50500 manufactured by Okaya Electric Industries Co., Ltd.).

Torque and Rotation Speed Characteristics

2,000-r/min Cylindrical Servomotors

- **2,000-r/min Servomotors with 200-VAC Power Input**

The following graphs show the characteristics with a 3-m standard cable and a 200-VAC input.

R88M-G1K020T (1 kW)

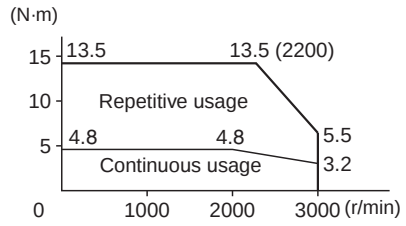

R88M-G1K520T (1.5 kW)

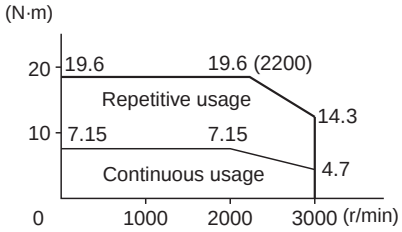

R88M-G2K020T (2 kW)

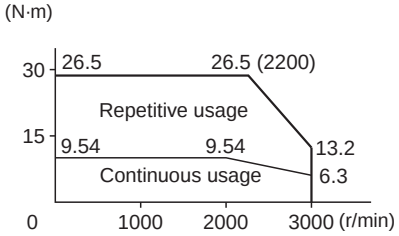

R88M-G3K020T (3 kW)

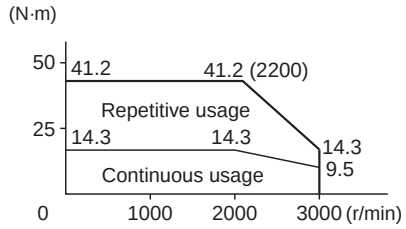

R88M-G4K020T (4 kW)

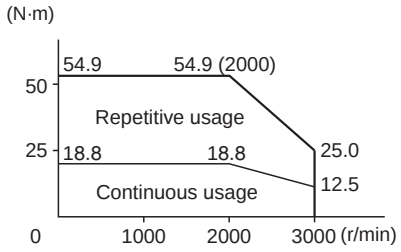

R88M-G5K020T (5 kW)

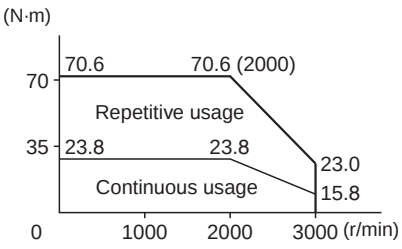

R88M-G7K515T (7.5 kW)

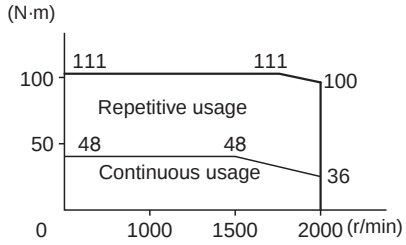

Servomotor Specifications (R88M-G)

● Characteristics

1,000-r/min Cylindrical Servomotors

200-VAC Input Power

Item	Model (R88M-) / Unit	G90010T	G2K010T	G3K010T	G4K510T	G6K010T
Rated output *1	W	900	2000	3000	4500	6000
Rated torque *1	N·m	8.62	19.1	28.4	42.9	57.2
Rated rotation speed	r/min	1000				
Max. momentary rotation speed	r/min	2000				
Max. momentary torque *1	N·m	18.4	41.5	60	101	130
Rated current *1	A (rms)	7.6	18.5	24	33	57.2
Max. momentary current *1	A (rms)	17.1	44	57.1	84.2	121.4
Rotor inertia	kg·m² (GD²/4)	1.12×10^{-3}	3.55×10^{-3}	5.57×10^{-3}	8.09×10^{-3}	9.9×10^{-3}
Applicable load inertia	—	10 times the rotor inertia max. *2				
Torque constant *1	N·m/A	1.13	1	1.1	1.3	1.22
Power rate *1	kW/s	66.3	103	145	228	331
Mechanical time constant	ms	0.88	0.97	0.74	0.7	0.65
Electrical time constant	ms	20	25	30	31	46.2
Allowable radial load *3	N	686	1176	1470	1470	1764
Allowable thrust load *3	N	196	490	490	490	588
Weight: Without brake	kg	Approx. 8.5	Approx. 17.5	Approx. 25	Approx. 34	Approx. 41
Weight: With brake	kg	Approx. 10	Approx. 21	Approx. 28.5	Approx. 39.5	Approx. 45
Radiation shield dimensions (material)		275 × 260 × t15 (Al)	470 × 440 × t30 (Al)			
Applicable Servo Drives (R88D-)		GT15H	GT30H	GT50H	GT50H	GT75H
Brake specifications: Brake inertia	kg·m² (GD²/4)	1.35×10^{-4}	4.7×10^{-4}	4.7×10^{-4}	4.7×10^{-4}	4.7×10^{-4}
Brake specifications: Excitation voltage *4	V	24 VDC ±10%				
Brake specifications: Power consumption (at 20°C)	W	19	31	34		
Brake specifications: Current consumption (at 20°C)	A	0.79	1.3	1.4		
Brake specifications: Static friction torque	N·m	13.7 min.	24.5 min.	58.8 min.		
Brake specifications: Attraction time *5	ms	100 max.	80 max.	150 max.		
Brake specifications: Release time *5	ms	50 max.	25 max.	50 max.		
Brake specifications: Backlash		±1°				
Brake specifications: Allowable work per braking	J	1176	1372			
Brake specifications: Allowable total work	J	1.6×10^{6}	2.9×10^{6}			
Brake specifications: Allowable angular acceleration	rad/s²	10,000 max. (Speed of 900 r/min or more must not be changed in less than 10 ms)				
Brake specifications: Brake life	---	10,000,000 operations min.				
Brake specifications: Rating	---	Continuous				
Brake specifications: Insulation grade	---	Type F				

*1. These are the values when the Servomotor is combined with a Servo Drive at room temperature (20°C, 65%). The maximum momentary torque shown above indicates the standard value.

*2. Applicable Load Inertia:
- The operable load inertia ratio (load inertia/rotor inertia) depends on the mechanical configuration and its rigidity. For a machine with high rigidity, operation is possible even with high load inertia. Select an appropriate motor and confirm that operation is possible.
- If the dynamic brake is activated frequently with high load inertia, the dynamic brake resistor may burn. Do not repeatedly turn the Servomotor ON and OFF while the dynamic brake is enabled.
- The dynamic brake is designed only for emergency stops. Design the system so that the Servomotor remains stopped for at least 3 minutes after applying the dynamic brake. Otherwise the dynamic brake circuits may fail.

*3. The allowable radial and thrust loads are the values determined for a service life of 20,000 hours at normal operating temperatures. The allowable radial loads are applied as shown in the following diagram.

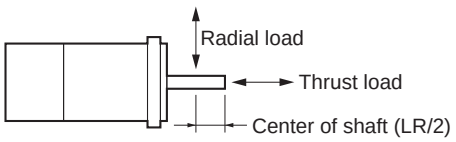

*4. This is an OFF brake. (It is reset when excitation voltage is applied).

*5. The operation time is the value (reference value) measured with a surge suppressor (CR50500 manufactured by Okaya Electric Industries Co., Ltd.).

Torque and Rotation Speed Characteristics

1,000-r/min Cylindrical Servomotors

- **1,000-r/min Servomotors with 200-VAC Power Input**

The following graphs show the characteristics with a 3-m standard cable and a 200-VAC input.

R88M-G90010T (900 W)

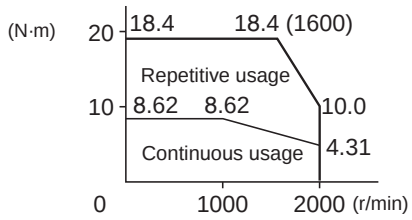

R88M-G2K010T (2 kW)

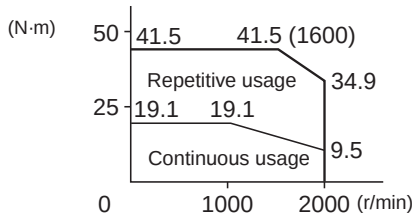

R88M-G3K010T (3 kW)

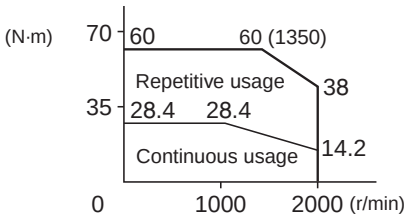

R88M-G4K510 (4.5 kW)

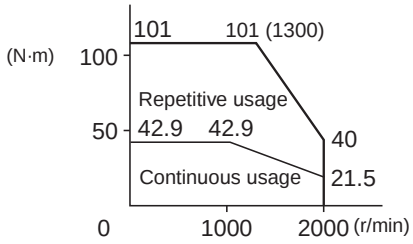

R88M-G6K010T (6 kW)

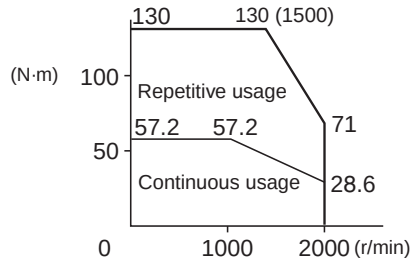

Decelerator Specifications (R88G-HPG/VRSF)

● Backlash: 3 Arcminutes Max.

Decelerators for 3,000-r/min Servomotors

Model			Rated rotation speed	Rated torque	Efficiency	Maximum momentary rotation speed	Maximum momentary torque	Decelerator inertia	Allowable radial load	Allowable thrust load	Weight
			r/min	N·m	%	r/min	N·m	kg·m²	N	N	kg
50 W	1/5	R88G-HPG11A05100B	600	0.60	75	1000	1.68	5.00×10^{-7}	135	538	0.29
	1/9	R88G-HPG11A09050B	333	1.17	81	555	3.29	3.00×10^{-7}	161	642	0.29
	1/21	R88G-HPG14A21100B	143	2.18	65	238	6.13	5.00×10^{-6}	340	1358	1.04
	1/33	R88G-HPG14A33050B	91	3.73	71	151	10.5	4.40×10^{-6}	389	1555	1.04
	1/45	R88G-HPG14A45050B	67	5.09	71	111	14.3	4.40×10^{-6}	427	1707	1.04
100 W	1/5	R88G-HPG11A05100B	600	1.37	86	1000	3.8	5.00×10^{-7}	135	538	0.29
	1/11	R88G-HPG14A11100B	273	2.63	75	454	7.39	6.00×10^{-6}	280	1119	1.04
	1/21	R88G-HPG14A21100B	143	5.40	80	238	15.2	5.00×10^{-6}	340	1358	1.04
	1/33	R88G-HPG20A33100B	91	6.91	65	151	19.4	6.50×10^{-5}	916	3226	2.4
	1/45	R88G-HPG20A45100B	67	9.42	65	111	26.5	6.50×10^{-5}	1006	3541	2.4
200 W	1/5	R88G-HPG14A05200B	600	2.49	78	1000	6.93	2.07×10^{-5}	221	883	1.02
	1/11	R88G-HPG14A11200B	273	6.01	85	454	16.7	1.93×10^{-5}	280	1119	1.09
	1/21	R88G-HPG20A21200B	143	10.2	76	238	28.5	4.90×10^{-5}	800	2817	2.9
	1/33	R88G-HPG20A33200B	91	17.0	81	151	47.4	4.50×10^{-5}	916	3226	2.9
	1/45	R88G-HPG20A45200B	67	23.2	81	111	64.6	4.50×10^{-5}	1006	3541	2.9
400 W	1/5	R88G-HPG14A05400B	600	5.66	87	1000	16.0 (15.7)	2.07×10^{-5}	221	883	1.09
	1/11	R88G-HPG20A11400B	273	11.7	82	454	33.1 (32.5)	5.70×10^{-5}	659	2320	2.9
	1/21	R88G-HPG20A21400B	143	23.5	86	238	66.5 (65.2)	4.90×10^{-5}	800	2547	2.9
	1/33	R88G-HPG32A33400B	91	34.7	81	151	98.2 (96.3)	6.20×10^{-5}	1565	6240	7.5
	1/45	R88G-HPG32A45400B	67	47.4	81	111	133.9 (131.4)	6.10×10^{-5}	1718	6848	7.5
750 W	1/5	R88G-HPG20A05750B	600	9.94	83	1000	29.2	6.80×10^{-5}	520	1832	2.9
	1/11	R88G-HPG20A11750B	273	23.2	88	454	68.1	6.00×10^{-5}	659	2320	3.1
	1/21	R88G-HPG32A21750B	143	42.3	84	238	124.3	3.00×10^{-4}	1367	5448	7.8
	1/33	R88G-HPG32A33750B	91	69.7	88	151	204.7	2.70×10^{-4}	1565	6240	7.8
	1/45	R88G-HPG32A45750B	67	95.0	88	111	279.2	2.70×10^{-4}	1718	6848	7.8
1 kW	1/5	R88G-HPG32A051K0B	600	11.5	72	1000	32.9	3.90×10^{-4}	889	3542	7.3
	1/11	R88G-HPG32A111K0B	273	28.9	83	454	82.6	3.40×10^{-4}	1126	4488	7.8
	1/21	R88G-HPG32A211K0B	143	58.1	87	238	166.1	3.00×10^{-4}	1367	5488	7.8
	1/33	R88G-HPG32A331K0B	91	94.3	90	151	270.0	2.80×10^{-4}	1565	6240	7.8
	1/45	R88G-HPG50A451K0B	67	124.2	87	100*1	355.4	4.70×10^{-4}	4538	15694	19.0
1.5 kW	1/5	R88G-HPG32A052K0B	600	19.1	80	1000	51.3	3.90×10^{-4}	889	3542	7.4
	1/11	R88G-HPG32A112K0B	273	45.7	87	454	122.5	3.40×10^{-4}	1126	4488	7.9
	1/21	R88G-HPG32A211K5B	143	90.1	90	238	241.9	3.00×10^{-4}	1367	5448	7.9
	1/33	R88G-HPG50A332K0B	91	141.5	90	136*1	379.7	4.80×10^{-4}	4135	14300	19.0
	1/45	R88G-HPG50A451K5B	67	192.9	90	100*1	517.8	4.70×10^{-4}	4538	15694	19.0
2 kW	1/5	R88G-HPG32A052K0B	600	26.7	84	1000	77.4	3.90×10^{-4}	889	3542	7.4
	1/11	R88G-HPG32A112K0B	273	62.4	89	454	180.7	3.40×10^{-4}	1126	4488	7.9
	1/21	R88G-HPG50A212K0B	143	118.9	89	214*1	343.9	5.80×10^{-4}	3611	12486	19.0
	1/33	R88G-HPG50A332K0B	91	191.8	91	136*1	555.0	4.80×10^{-4}	4135	14300	19.0
3 kW	1/5	R88G-HPG32A053K0B	600	42.0	88	1000	118.9	3.80×10^{-4}	889	3542	7.3
	1/11	R88G-HPG50A113K0B	273	92.3	88	409*1	261.4	7.70×10^{-4}	2974	10285	19.0
	1/21	R88G-HPG50A213K0B	143	183.0	91	214*1	517.7	5.80×10^{-4}	3611	12486	19.0
4 kW	1/5	R88G-HPG32A054K0B	600	53.9	90	900*1	163.4	3.80×10^{-4}	889	3542	7.9
	1/11	R88G-HPG50A115K0B	273	124.6	90	409*1	359.0	8.80×10^{-4}	2974	10285	19.1
5 kW	1/5	R88G-HPG50A055K0B	600	69.3	88	900*1	197.8	1.20×10^{-3}	2347	8118	17.7
	1/11	R88G-HPG50A115K0B	273	158.4	91	409*1	451.9	8.80×10^{-4}	2974	10285	19.1

Note: 1. The values inside parentheses ( ) are for 100-V Servomotors.
Note: 2. The Decelerator inertia is the Servomotor shaft conversion value.
Note: 3. The protective structure for Servomotors with Decelerators satisfies IP44.
Note: 4. The allowable radial load is the value at the T/2 position.
Note: 5. The standard models have a straight shaft. Models with a key and tap are indicated by adding "J" to the end of the model number (the suffix in the box).

Decelerators for 3,000-r/min Flat Servomotors

Model			Rated rotation speed	Rated torque	Efficiency	Maximum momentary rotation speed	Maximum momentary torque	Decelerator inertia	Allowable radial load	Allowable thrust load	Weight
			r/min	N·m	%	r/min	N·m	kg·m²	N	N	kg
100 W	1/5	R88G-HPG11A05100PB	600	1.37	85	1000	3.67 (3.59)	5.00×10^{-7}	135	538	0.34
	1/11	R88G-HPG14A11100PB	273	2.63	75	454	7.06 (6.89)	6.00×10^{-6}	280	1119	1.04
	1/21	R88G-HPG14A21100PB	143	5.40	80	238	14.5 (14.2)	5.00×10^{-6}	340	1358	1.04
	1/33	R88G-HPG20A33100PB	91	6.91	65	151	18.6 (18.1)	4.50×10^{-5}	916	3226	2.9
	1/45	R88G-HPG20A45100PB	67	9.42	65	111	25.3 (24.7)	4.50×10^{-5}	1006	3541	2.9
200 W	1/5	R88G-HPG14A05200PB	600	2.49	78	1000	7.01	2.07×10^{-5}	221	883	0.99
	1/11	R88G-HPG20A11200PB	273	4.75	68	454	13.4	5.80×10^{-5}	659	2320	3.1
	1/21	R88G-HPG20A21200PB	143	10.2	76	238	28.8	4.90×10^{-5}	800	2817	3.1
	1/33	R88G-HPG20A33200PB	91	17.0	81	151	47.9	4.50×10^{-5}	916	3226	3.1
	1/45	R88G-HPG20A45200PB	67	23.2	81	111	65.4	4.50×10^{-5}	1006	3541	3.1
400 W	1/5	R88G-HPG20A05400PB	600	4.67	72	1000 (900)	13.1 (12.9)	7.10×10^{-5}	520	1832	3.1
	1/11	R88G-HPG20A11400PB	273	11.7	82	454 (409)	32.9 (32.4)	5.80×10^{-5}	659	2320	3.1
	1/21	R88G-HPG20A21400PB	143	23.5	86	238 (214)	66.2 (65.2)	4.90×10^{-5}	800	2817	3.1
	1/33	R88G-HPG32A33400PB	91	34.7	81	151 (136)	97.6 (96.2)	2.80×10^{-4}	1565	6240	7.8
	1/45	R88G-HPG32A45400PB	67	47.4	81	111 (100)	133.0 (131.2)	2.80×10^{-4}	1718	6848	7.8

Note: 1. The values inside parentheses ( ) are for 100-V Servomotors.
Note: 2. The Decelerator inertia is the Servomotor shaft conversion value.
Note: 3. The protective structure for Servomotors with Decelerators satisfies IP44.
Note: 4. The allowable radial load is the value at the T/2 position.
Note: 5. The standard models have a straight shaft. Models with a key and tap are indicated by adding "J" to the end of the model number (the suffix in the box).

Decelerators for 2,000-r/min Servomotors

Model			Rated rotation speed	Rated torque	Efficiency	Maximum momentary rotation speed	Maximum momentary torque	Decelerator inertia	Allowable radial load	Allowable thrust load	Weight
			r/min	N·m	%	r/min	N·m	kg·m²	N	N	kg
1 kW	1/5	R88G-HPG32A053K0B	400	20.4	85	600	57.4	3.80×10^{-4}	889	3542	7.3
	1/11	R88G-HPG32A112K0SB	182	47.3	90	273	133.1	3.40×10^{-4}	1126	4488	7.8
	1/21	R88G-HPG32A211K0SB	95	92.3	92	143	259.7	2.90×10^{-4}	1367	5448	7.8
	1/33	R88G-HPG50A332K0SB	60	144.9	92	91	407.6	4.70×10^{-4}	4135	14300	19.0
	1/45	R88G-HPG50A451K0SB	44	197.7	92	67	555.9	4.70×10^{-4}	4538	15694	19.0
1.5 kW	1/5	R88G-HPG32A053K0B	400	31.7	89	600	86.8	3.80×10^{-4}	889	3542	7.3
	1/11	R88G-HPG32A112K0SB	182	72.1	92	273	197.7	3.40×10^{-4}	1126	4488	7.8
	1/21	R88G-HPG50A213K0B	95	137.5	92	143	377.0	5.80×10^{-4}	3611	12486	19.0
	1/33	R88G-HPG50A332K0SB	60	219.4	93	91	601.5	4.70×10^{-4}	4135	14300	19.0
2 kW	1/5	R88G-HPG32A053K0B	400	43.2	91	600	119.9	3.80×10^{-4}	889	3542	7.3
	1/11	R88G-HPG32A112K0SB	182	97.4	93	273	270.5	3.40×10^{-4}	1126	4488	7.8
	1/21	R88G-HPG50A213K0B	95	185.6	93	143	515.9	5.80×10^{-4}	3611	12486	19.0
	1/33	R88G-HPG50A332K0SB	60	270.0*1	93	91	815.0	4.70×10^{-4}	4135	14300	19.0
3 kW	1/5	R88G-HPG32A054K0B	400	66.0	92	600	190.1	3.80×10^{-4}	889	3542	7.9
	1/11	R88G-HPG50A115K0B	182	145.2	92	273	418.3	8.80×10^{-4}	2974	10285	19.1
	1/21	R88G-HPG50A213K0SB	95	260.0*1	93	143	806.4	6.90×10^{-4}	3611	12486	19.1
	1/25	R88G-HPG65A253K0SB	80	322.9	90	120	930.1	3.00×10^{-3}	7846	28654	52.0
4 kW	1/5	R88G-HPG50A054K0SB	400	85.8	91	600	250.3	1.20×10^{-3}	2347	8118	18.6
	1/11	R88G-HPG50A114K0SB	182	192.7	93	273	562.8	8.70×10^{-4}	2974	10285	20.1
	1/20	R88G-HPG65A204K0SB	100	342.2	91	150	999.2	3.28×10^{-3}	7338	26799	52.0
	1/25	R88G-HPG65A254K0SB	80	430.9	92	120	1258.6	3.24×10^{-3}	7846	28654	52.0
5 kW	1/5	R88G-HPG50A055K0SB	400	109.8	92	600	325.5	1.10×10^{-3}	2347	8118	22.0
	1/11	R88G-HPG50A115K0SB	182	200.0*1	93	273	723.8	8.40×10^{-4}	2974	10285	23.5
	1/20	R88G-HPG65A205K0SB	100	438.2	92	150	1300.5	2.85×10^{-3}	7338	26799	55.4
	1/25	R88G-HPG65A255K0SB	80	550.9	93	120	1634.4	2.81×10^{-3}	7846	28654	55.4
7.5 kW	1/5	R88G-HPG65A057K5SB	300	221.1	92	400	511.2	2.07×10^{-2}	4841	17681	48.0
	1/12	R88G-HPG65A127K5SB	125	540.8	94	166	1250.7	2.02×10^{-2}	6295	22991	52.0

*1. "Rated torque" indicates the allowable rated torque for the decelerator. Do not exceed this value.

Note: 1. The Decelerator inertia is the Servomotor shaft conversion value.
Note: 2. The protective structure for Servomotors with Decelerators satisfies IP44.
Note: 3. The allowable radial load is the value at the T/2 position.
Note: 4. The standard models have a straight shaft. Models with a key and tap are indicated with "J" at the end of the model number (the suffix in the box).

Decelerators for 1,000-r/min Servomotors

Model			Rated rotation speed	Rated torque	Efficiency	Maximum momentary rotation speed	Maximum momentary torque	Decelerator inertia	Allowable radial load	Allowable thrust load	Weight
			r/min	N·m	%	r/min	N·m	kg·m²	N	N	kg
900 W	1/5	R88G-HPG32A05900TB	200	39.9	93	400	85.2	3.80×10^{-4}	889	3542	7.9
	1/11	R88G-HPG32A11900TB	90	89.0	94	182	190.1	3.40×10^{-4}	1126	4488	8.4
	1/21	R88G-HPG50A21900TB	47	169.8	94	95	362.4	7.00×10^{-4}	3611	12486	19.1
	1/33	R88G-HPG50A33900TB	30	268.5	94	60	573.2	5.90×10^{-4}	4135	14300	19.1
2 kW	1/5	R88G-HPG32A052K0TB	200	90.2	95	400	196.1	4.90×10^{-4}	889	3542	8.9
	1/11	R88G-HPG50A112K0TB	90	198.4	94	182	430.9	8.40×10^{-4}	2974	10285	20.1
	1/21	R88G-HPG50A212K0TB	47	320.0*1	95	95	786.8	6.50×10^{-4}	3611	12486	20.1
	1/25	R88G-HPG65A255K0SB	40	446.7	94	80	971.1	2.81×10^{-3}	7846	28654	55.4
3 kW	1/5	R88G-HPG50A055K0SB	200	133.9	94	400	282.9	1.10×10^{-3}	2347	8118	22.0
	1/11	R88G-HPG50A115K0SB	90	246.0*1	95	182	684.0	8.40×10^{-4}	2974	10285	23.5
	1/20	R88G-HPG65A205K0SB	50	534.7	94	100	1129.2	2.85×10^{-3}	7338	26799	55.4
	1/25	R88G-HPG65A255K0SB	40	669.9	94	80	1411.5	2.81×10^{-3}	7846	28654	55.4
4.5 kW	1/5	R88G-HPG50A054K5TB	200	203.5	95	400	479.2	1.20×10^{-3}	2347	8118	22.0
	1/12	R88G-HPG65A127K5SB	83	485.6	94	166	1142.9	2.02×10^{-2}	6295	22991	52.0
	1/20	R88G-HPG65A204K5TB	50	813.1	95	100	1915.0	1.92×10^{-2}	7338	26799	52.0
6 kW	1/5	R88G-HPG65A057K5SB	200	268.1	94	400	609.7	2.07×10^{-2}	4841	17681	48.0
	1/12	R88G-HPG65A127K5SB	83	650.3	95	166	1477.3	2.02×10^{-2}	6295	22991	52.0

*1. "Rated torque" indicates the allowable rated torque for the decelerator. Do not exceed this value.

Note: 1. The Decelerator inertia is the Servomotor shaft conversion value.
Note: 2. The protective structure for Servomotors with Decelerators satisfies IP44.
Note: 3. The allowable radial load is the value at the T/2 position.
Note: 4. The standard models have a straight shaft. Models with a key and tap are indicated with "J" at the end of the model number (the suffix in the box).

● **Backlash: 15 Arcminutes Max.**

Decelerators for 3,000-r/min Servomotors

Model			Rated rotation speed	Rated torque	Efficiency	Maximum momentary rotation speed	Maximum momentary torque	Decelerator inertia	Allowable radial load	Allowable thrust load	Weight
			r/min	N·m	%	r/min	N·m	kg·m²	N	N	kg
50 W	1/5	R88G-VRSF05B100CJ	600	0.52	65	1000	1.46	4.00×10^{-6}	392	196	0.55
	1/9	R88G-VRSF09B100CJ	333	0.93	65	556	2.63	3.50×10^{-6}	441	220	0.55
	1/15	R88G-VRSF15B100CJ	200	1.67	70	333	4.73	3.50×10^{-6}	588	294	0.70
	1/25	R88G-VRSF25B100CJ	120	2.78	70	200	7.88	3.25×10^{-6}	686	343	0.70
100 W	1/5	R88G-VRSF05B100CJ	600	1.19	75	1000	3.38	4.00×10^{-6}	392	196	0.55
	1/9	R88G-VRSF09B100CJ	333	2.29	80	556	6.48	3.50×10^{-6}	441	220	0.55
	1/15	R88G-VRSF15B100CJ	200	3.81	80	333	10.8	3.50×10^{-6}	588	294	0.70
	1/25	R88G-VRSF25B100CJ	120	6.36	80	200	18.0	3.25×10^{-6}	686	343	0.70
200 W	1/5	R88G-VRSF05B200CJ	600	2.70	85	1000	7.57	1.18×10^{-5}	392	196	0.72
	1/9	R88G-VRSF09C200CJ	333	3.77	66	556	10.6	2.75×10^{-5}	931	465	1.70
	1/15	R88G-VRSF15C200CJ	200	6.29	66	333	17.6	3.00×10^{-5}	1176	588	2.10
	1/25	R88G-VRSF25C200CJ	120	11.1	70	200	31.2	2.88×10^{-5}	1323	661	2.10
400 W	1/5	R88G-VRSF05C400CJ	600	5.40	85	1000	15.6 (15.3)	3.63×10^{-5}	784	392	1.70
	1/9	R88G-VRSF09C400CJ	333	9.50	83	556	27.4 (26.8)	2.75×10^{-5}	931	465	1.70
	1/15	R88G-VRSF15C400CJ	200	15.8	83	333	45.7 (44.8)	3.00×10^{-5}	1176	588	2.10
	1/25	R88G-VRSF25C400CJ	120	26.4	83	200	76.1 (74.7)	2.88×10^{-5}	1323	661	2.10
750 W	1/5	R88G-VRSF05C750CJ	600	10.7	90	1000	31.7	7.13×10^{-5}	784	392	2.10
	1/9	R88G-VRSF09D750CJ	333	18.2	85	556	53.9	6.50×10^{-5}	1176	588	3.40
	1/15	R88G-VRSF15D750CJ	200	30.4	85	333	89.9	7.00×10^{-5}	1372	686	3.80
	1/25	R88G-VRSF25D750CJ	120	50.7	85	200	149.8	6.80×10^{-5}	1617	808	3.80

Note: 1. The values inside parentheses ( ) are for 100-V Servomotors.
Note: 2. The Decelerator inertia is the Servomotor shaft conversion value.
Note: 3. The protective structure for Servomotors with Decelerators satisfies IP44.
Note: 4. The allowable radial load is the value at the T/2 position.
Note: 5. The standard models have a straight shaft with a key.

Decelerators for 3,000-r/min Flat Servomotor

Model			Rated rotation speed	Rated torque	Efficiency	Maximum momentary rotation speed	Maximum momentary torque	Decelerator inertia	Allowable radial load	Allowable thrust load	Weight
			r/min	N·m	%	r/min	N·m	kg·m²	N	N	kg
100 W	1/5	R88G-VRSF05B100PCJ	600	1.19	75	1000	3.15	4.00×10^{-6}	392	196	0.72
	1/9	R88G-VRSF09B100PCJ	333	2.29	80	556	6.048	3.50×10^{-6}	441	220	0.72
	1/15	R88G-VRSF15B100PCJ	200	3.81	80	333	10.08	3.50×10^{-6}	588	294	0.87
	1/25	R88G-VRSF25B100PCJ	120	6.36	80	200	16.8	3.25×10^{-6}	686	343	0.87
200 W	1/5	R88G-VRSF05B200PCJ	600	2.70	85	1000	7.65	1.18×10^{-5}	392	196	0.85
	1/9	R88G-VRSF09C200PCJ	333	3.77	66	556	10.692	2.75×10^{-5}	931	465	1.80
	1/15	R88G-VRSF15C200PCJ	200	6.29	66	333	17.82	3.00×10^{-5}	1176	588	2.20
	1/25	R88G-VRSF25C200PCJ	120	11.1	70	200	31.5	2.88×10^{-5}	1323	661	2.20
400 W	1/5	R88G-VRSF05C400PCJ	600	5.40	85	1000 (900)	15.5 (15.3)	3.63×10^{-5}	784	392	1.80
	1/9	R88G-VRSF09C400PCJ	333	9.50	83	556 (500)	27.3 (26.9)	2.75×10^{-5}	931	465	1.80
	1/15	R88G-VRSF15C400PCJ	200	15.8	83	333 (300)	45.4 (44.8)	3.00×10^{-5}	1176	588	2.20
	1/25	R88G-VRSF25C400PCJ	120	26.4	83	200 (180)	75.7 (74.7)	2.88×10^{-5}	1323	661	2.20

Note: 1. The values inside parentheses ( ) are for 100-V Servomotors.
Note: 2. The Decelerator inertia is the Servomotor shaft conversion value.
Note: 3. The protective structure for Servomotors with Decelerators satisfies IP44.
Note: 4. The allowable radial load is the value at the T/2 position.
Note: 5. The standard models have a straight shaft with a key.

Encoder, External Regeneration Resistors, Reactor and Parameter Unit Specifications

● Encoder Specifications

Incremental Encoders

Item	Specifications
Encoder system	Optical encoder
No. of output pulses	Phases A and B: 2,500 pulses/rotation, Phase Z: 1 pulse/rotation
Power supply voltage	5 VDC ±5%
Power supply current	180 mA (max.)
Output signals	+S, −S
Output interface	RS-485 compliance

Absolute Encoders

Item	Specifications
Encoder system	Optical encoder 17 bits
No. of output pulses	Phases A and B: 32,768 pulses/rotation, Phase Z: 1 pulse/rotation
Maximum rotations	–32,768 to +32,767 rotations
Power supply voltage	5 VDC ±5%
Power supply current	110 mA (max.)
Applicable battery voltage	3.6 VDC
Current consumption of battery	180 μA for a maximum of 5 s right after power interruption 100 μA for operation during power interruption 3.6 μA when power is supplied to Servo Drive
Output signals	+S, −S
Output interface	RS-485 compliance

● External Regeneration Resistors Specifications

Model	Resistance	Nominal capacity	Regeneration absorption for 120°C temperature rise	Heat radiation condition	Thermal switch output specifications
R88A-RR08050S	50 Ω	80 W	20 W	Aluminum 250 × 250, Thickness: 3.0	Operating temperature: 150°C±5%, NC contact, Rated output: 30 VDC, 50 mA max.
R88A-RR080100S	100 Ω				
R88A-RR22047S1	47 Ω	220 W	70 W	Aluminum 350 × 350, Thickness: 3.0	Operating temperature: 170°C±5%, NC contact, Rated output: 3 A
R88A-RR50020S	20 Ω	500 W	180 W	Aluminum 600 × 600, Thickness: 3.0	Operating temperature: 200°C±7%, NC contact, Rated output: 250 VAC, 0.2 A max. 24 VDC, 0.2 A max.

● Reactor Specifications

Servo Drive	Reactor				Reactor type
	Model	Rated current	Inductance	Weight	
R88D-GTA5L R88D-GT01H	3G3AX-DL2002	1.6 A	21.4 mH	Approx. 0.8 kg	Single-phase
R88D-GT01L R88D-GT02H	3G3AX-DL2004	3.2 A	10.7 mH	Approx. 1.0 kg	Single-phase
R88D-GT02L R88D-GT04H	3G3AX-DL2007	6.1 A	6.75 mH	Approx. 1.3 kg	Single-phase
R88D-GT04L R88D-GT08H R88D-GT10H	3G3AX-DL2015	9.3 A	3.51 mH	Approx. 1.6 kg	Single-phase
R88D-GT15H	3G3AX-DL2022	13.8 A	2.51 mH	Approx. 2.1 kg	Single-phase
R88D-GT08H R88D-GT10H R88D-GT15H	3G3AX-AL2025	10.0 A	2.8 mH	Approx. 2.8 kg	Three-phase
R88D-GT20H R88D-GT30H	3G3AX-AL2055	20.0 A	0.88 mH	Approx. 4.0 kg	Three-phase
R88D-GT50H	3G3AX-AL2110	34.0 A	0.35 mH	Approx. 5.0 kg	Three-phase
R88D-GT75H	3G3AX-AL2220	67.0 A	0.18 mH	Approx. 10.0 kg	Three-phase

● R88A-PR02G Parameter Unit Specifications

General Specifications

Item	Specifications
Operating ambient temperature **Operating ambient humidity**	0 to 55°C 90% max. (with no condensation)
Storage ambient temperature **Storage ambient humidity**	–20 to 80°C 90% max. (with no condensation)
Storage and operating atmosphere	No corrosive gases
Vibration resistance	5.9 m/s^2 max.

Performance Specifications

Item		Specifications
Type		Hand-held
Cable length		1.5 m
Connectors		Mini DIN 8-pin MD connector
Display		7-segment LED
External dimensions		62 × 114 × 15 mm (W × H × D)
Weight		Approx. 0.1 kg (including cable that is provided)
Communications specifications	**Standard**	RS-232
	Communications method	Asynchronous (ASYNC)
	Baud rate	9,600 bps
	Start bits	1 bit
	Data	8 bits
	Parity	None
	Stop bits	1 bit

Connections

● Control I/O Connector Specifications (CN1)

Control I/O Signal Connections and External Signal Processing for Position Control

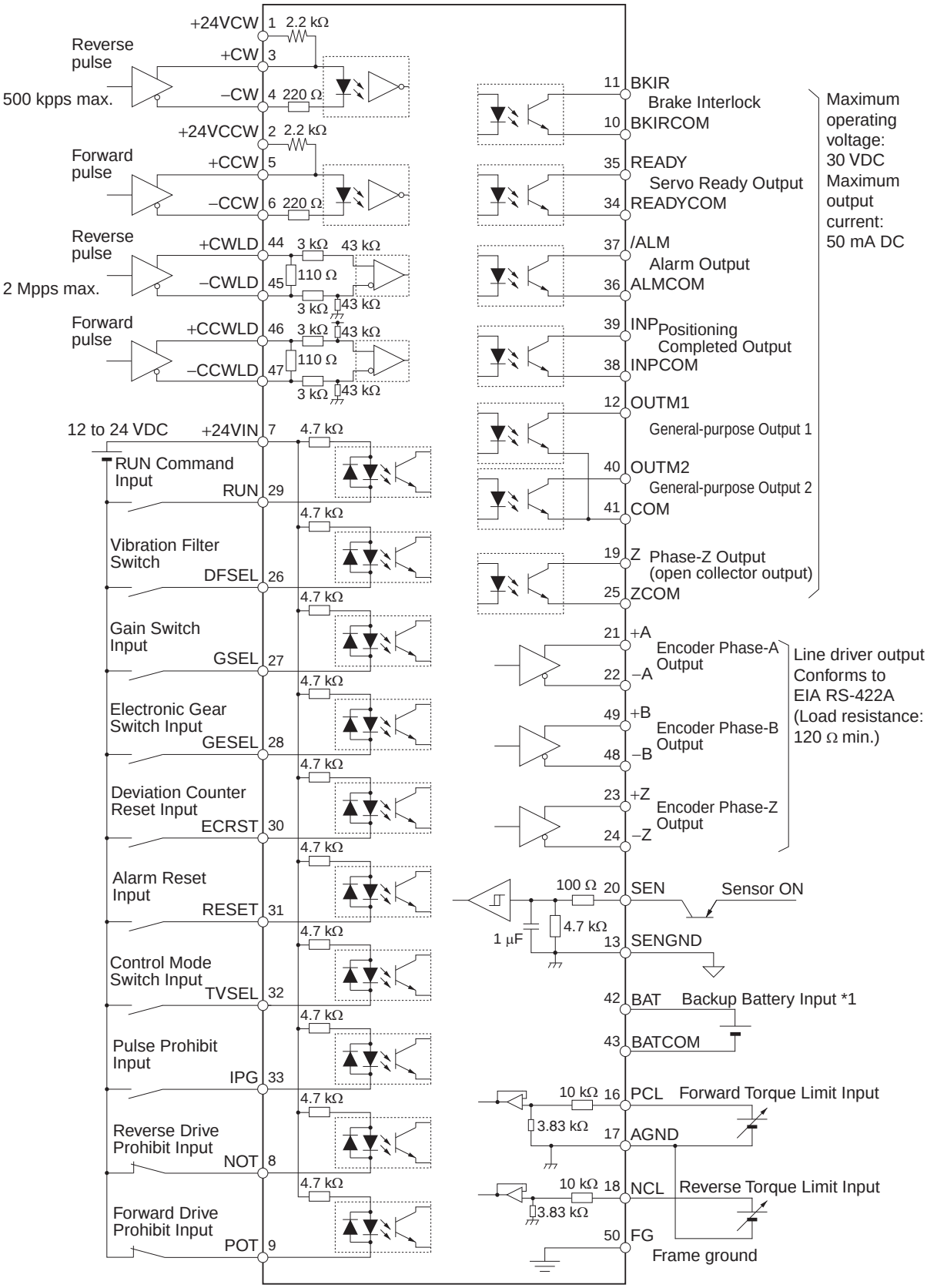

*1. If a backup battery is connected, a cable with a battery is not required.

Control I/O Signal Connections and External Signal Processing for Speed Control

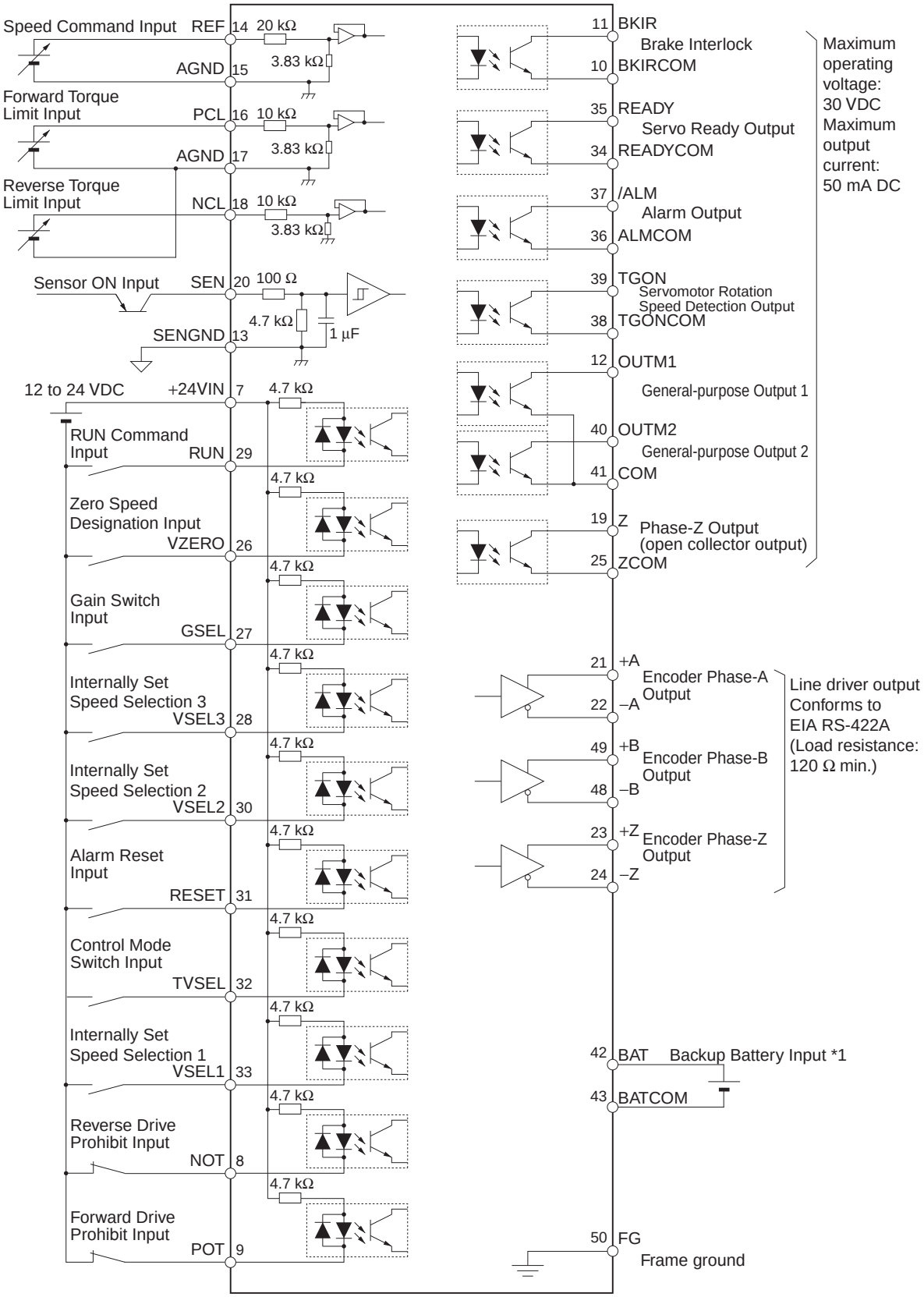

*1. If a backup battery is connected, a cable with a battery is not required.

Control I/O Signal Connections and External Signal Processing for Torque Control

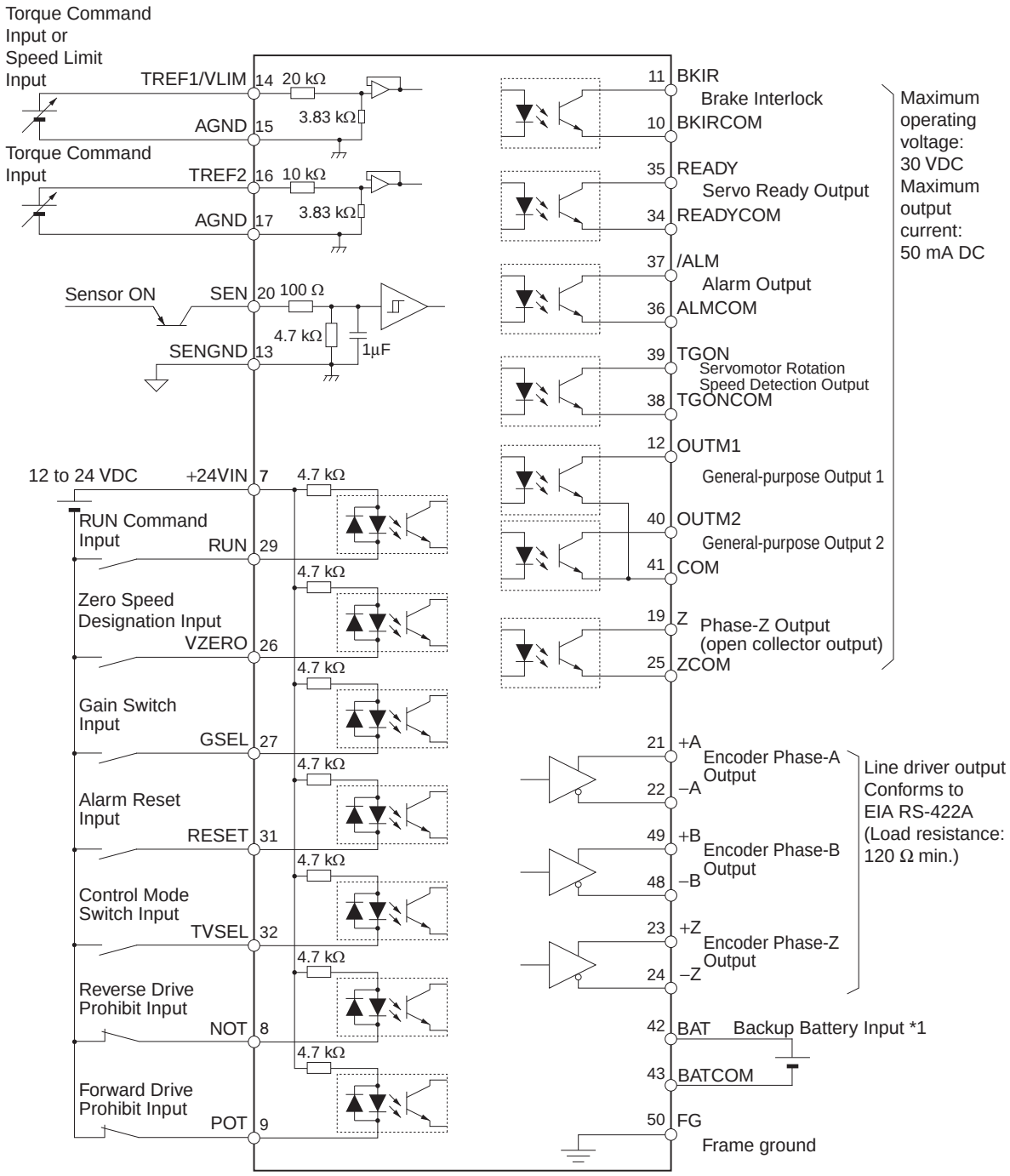

*1. If a backup battery is connected, a cable with a battery is not required.

● Peripheral Device Connection Examples

R88D-GTA5L/-GT01L/-GT02L/-GT04L

R88D-GT01H/-GT02H/-GT04H/-GT08H/-GT10H/-GT15H

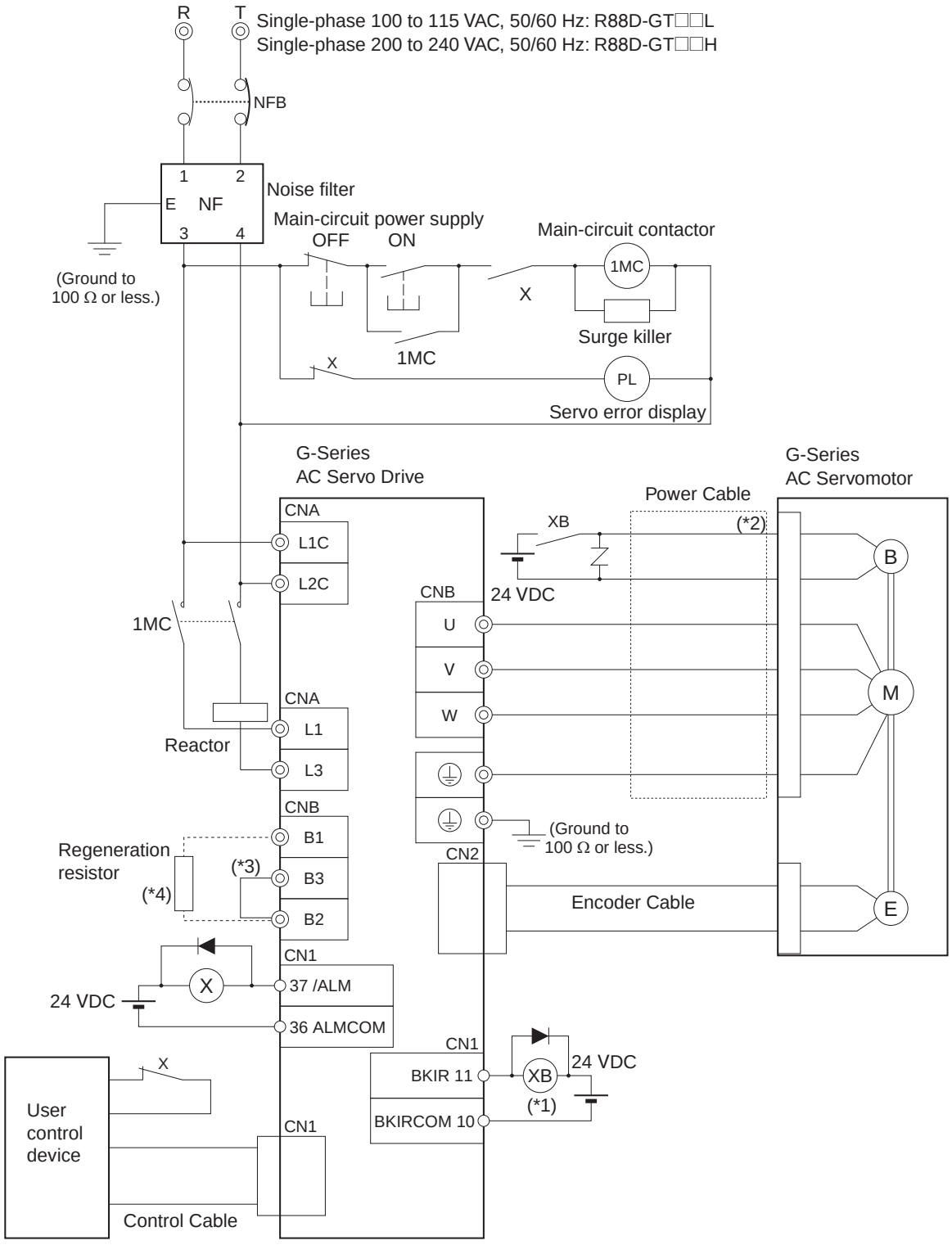

*1. Recommended relay: MY Relay (24 V), by OMRON. For example, the MY2 Relay's rated inductive load is 2 A at 24 VDC and applicable to all G-Series Servomotors with brakes.
*2. The brake is not affected by the polarity of the power supply.
*3. Connect B2-B3 for the models with a built-in regeneration resistor (GT04L, GT08H, GT10H, and GT15H).
If the amount of regeneration is large, disconnect B2-B3 and connect an External Regeneration Resistor to B1-B2.
*4. The models GTA5L to GT02L and GT01H to GT04H do not have a built-in regeneration resistor. If the amount of regeneration is large, an External Regeneration Resistor must be connected to B1-B2.

R88D-GT08H/-GT10H/-GT15H

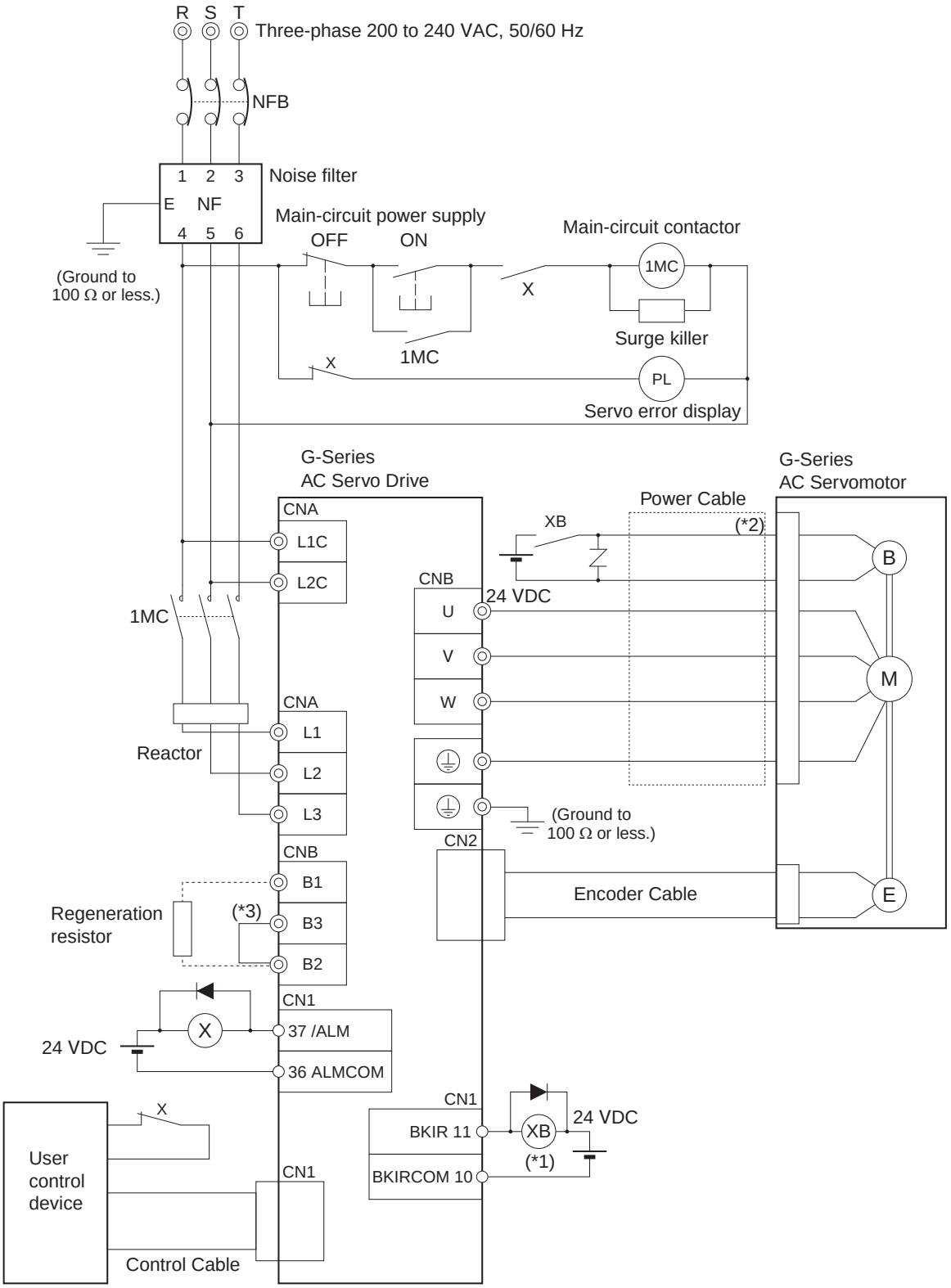

*1. Recommended relay: MY Relay (24 V), by OMRON. For example, the MY2 Relay's rated inductive load is 2 A at 24 VDC and applicable to all G-Series Servomotors with brakes.
*2. The brake is not affected by the polarity of the power supply.
*3. Connect B2-B3 for the models with a built-in regeneration resistor (GT08H to GT15H).
If the amount of regeneration is large, disconnect B2-B3 and connect an External Regeneration Resistor to B1-B2.The brake is not affected by the polarity of the power supply.

R88D-GT20H/-GT30H/-GT50H

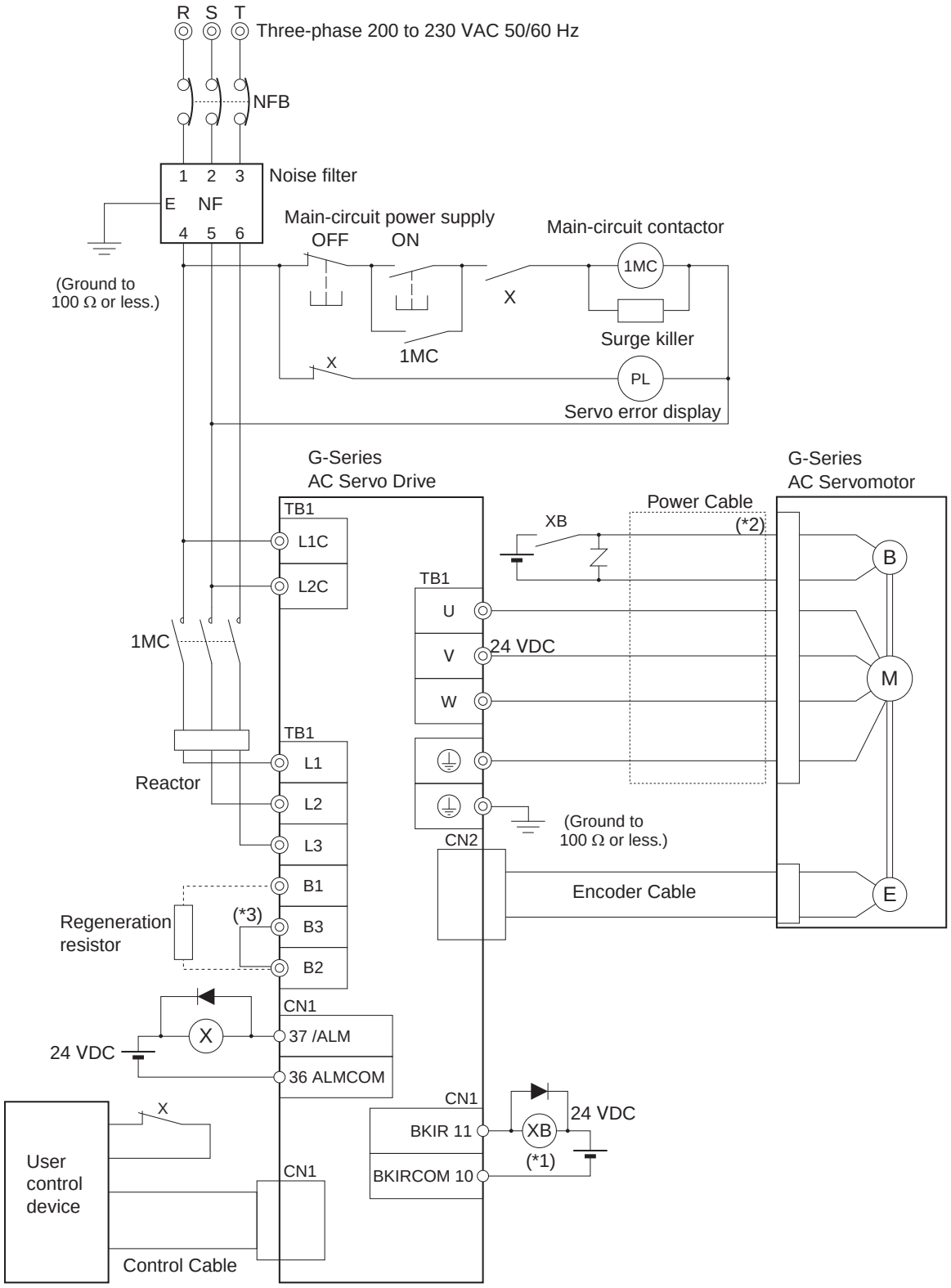

*1. Recommended relay: MY Relay (24 V), by OMRON. For example, the MY2 Relay's rated inductive load is 2 A at 24 VDC and applicable to all G-Series Servomotors with brakes.
*2. The brake is not affected by the polarity of the power supply.
*3. Connect B2-B3 for the models with a built-in regeneration resistor (GT20H to GT50H).
If the amount of regeneration is large, disconnect B2-B3 and connect an External Regeneration Resistor to B1-B2.

R88D-GT75H

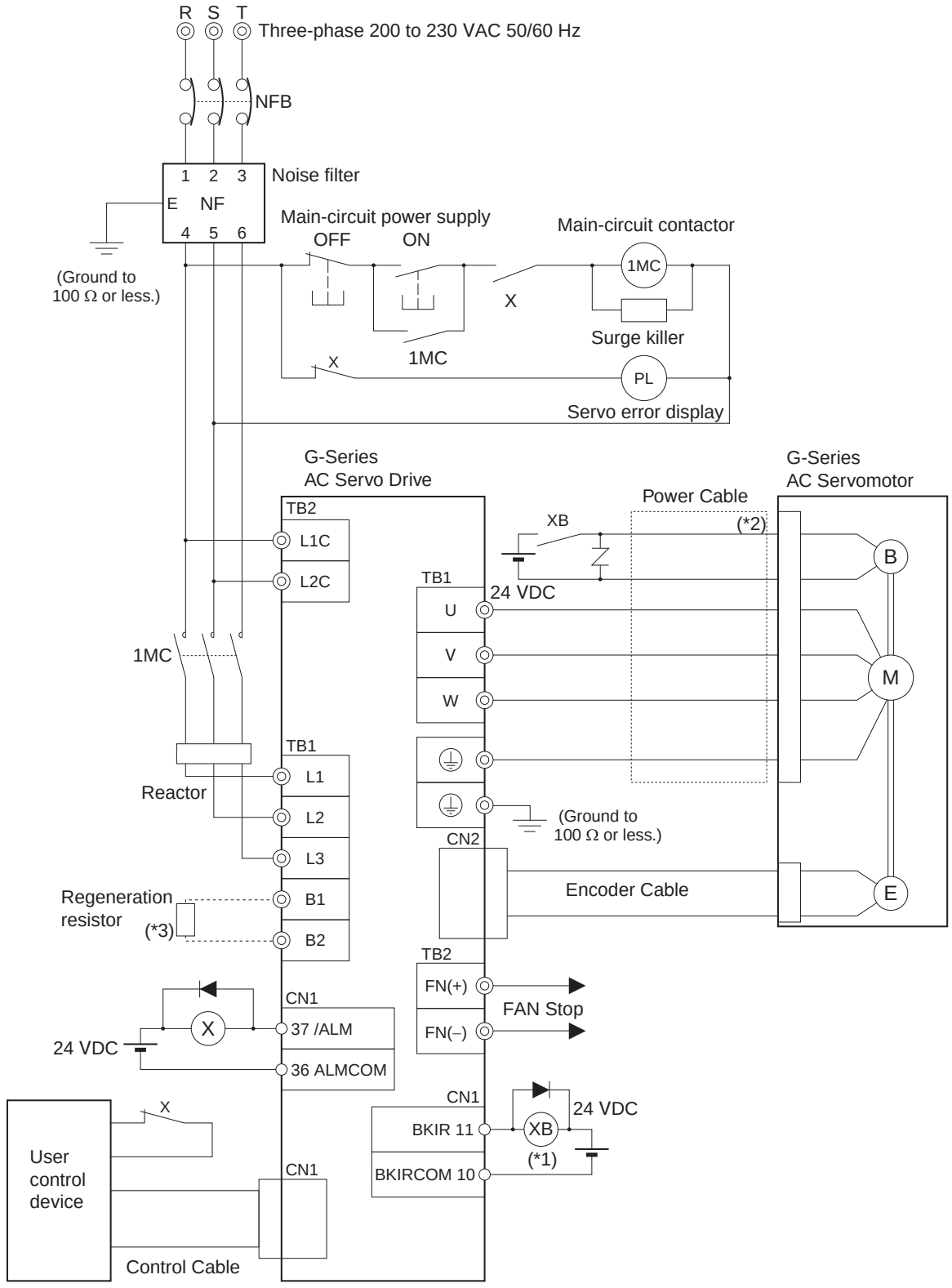

*1. Recommended relay: MY Relay (24 V), by OMRON. For example, the MY2 Relay's rated inductive load is 2 A at 24 VDC and applicable to all G-Series Servomotors with brakes.
*2. The brake is not affected by the polarity of the power supply.
*3. The model GT75H does not have a built-in regeneration resistor.
If the amount of regeneration is large, an External Regeneration Resistor must be connected to B1-B2.

I/O Circuit Diagrams

Control Input Circuits

• Speed Command/Torque Command Input

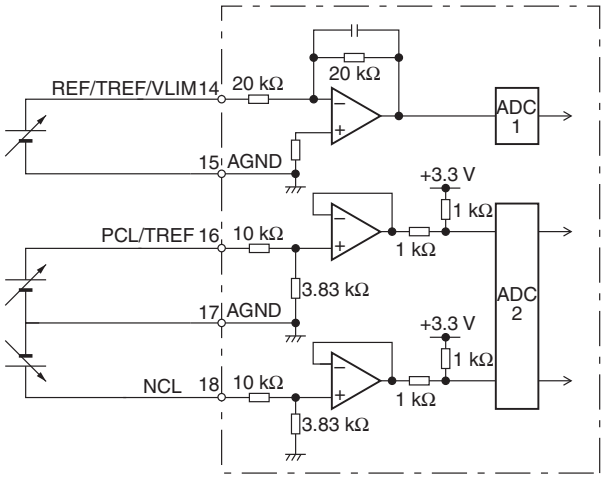

• The maximum allowable input voltage is ±10 V for each input. The VR must be 2 kΩ with B characteristics and 1/2 W minimum. R must be 200 Ω and 1/2 W minimum.

• Position Command Pulse Input (Photocoupler Input)

Line Driver Input (500 kpps Maximum)

(+CW:3, –CW:4, +CCW:5, –CCW:6)

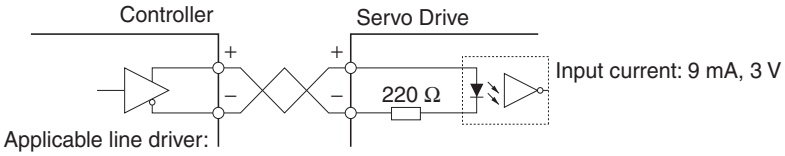

Applicable line driver:
AM26LS31A or
the equivalent

Open-collector Input

• External 24-V power supply without a current-limiting resistor (200 kpps maximum)
(+24VCW: 1, –CW: 4, +24VCCW: 2, –CCW: 6)

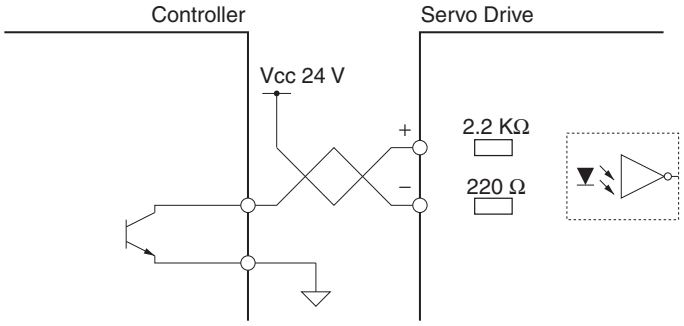

• External control power supply (200 kpps maximum)
(+CW: 3, –CW: 4, +CCW: 5, –CCW: 6)

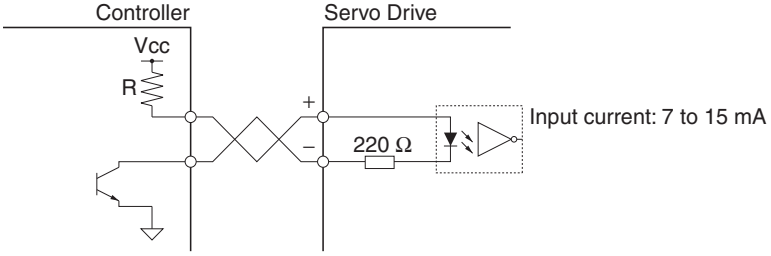

• Select a resistance R value so that the input current will be from 7 to 15 mA. Refer to the following table.

$$\frac{Vcc - 1.5}{R + 220} \fallingdotseq 10mA \quad (7\text{-}15mA)$$

VCC	R
24 V	2 kΩ (1/2 W)
12 V	1 kΩ (1/2 W)
5V	0Ω (Shorted)

- **Sequence Input**

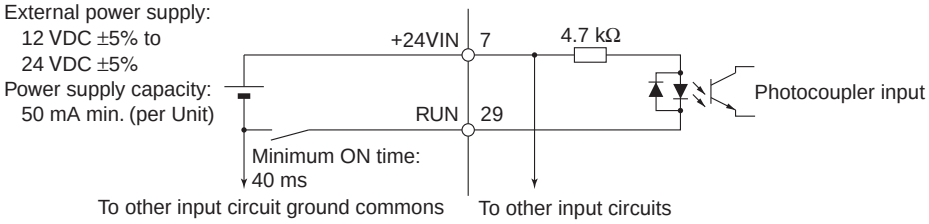

Signal Levels ON level: 10 V min.
OFF level: 3 V max.

- **Sensor Input**

Sensor ON Input **ABS**

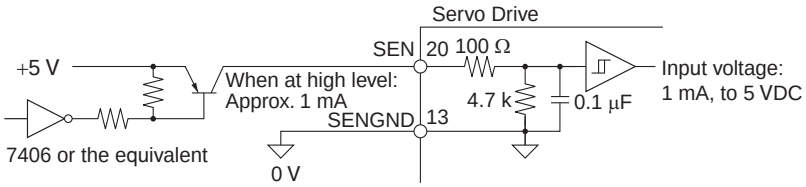

Signal Levels High level: 4 V min.
Low level: 0.8 V max.

- A PNP transistor is recommended.

Control Output Circuits

- **Position Feedback Output**

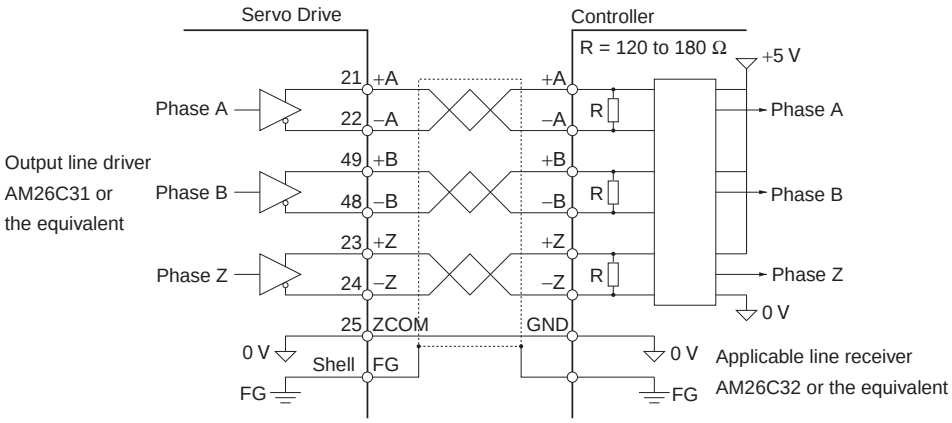

- **Phase-Z Output (Open-collector Output)**

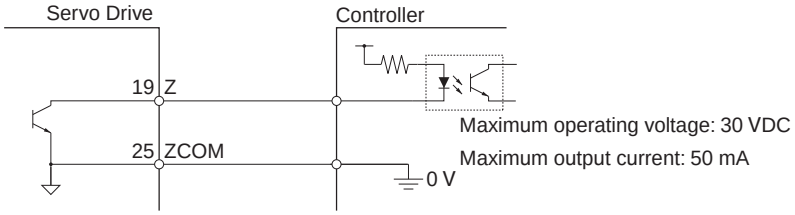

- **Sequence Output**

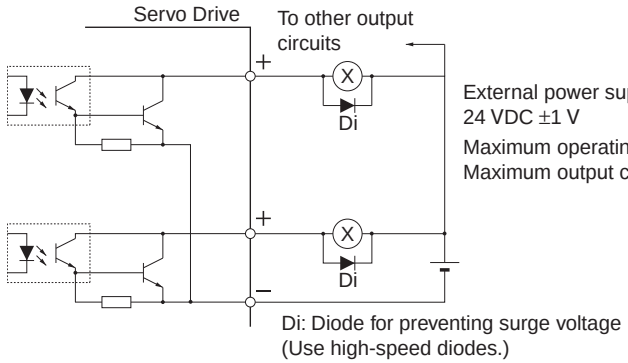

Components and Functions

Servo Drive Part Names

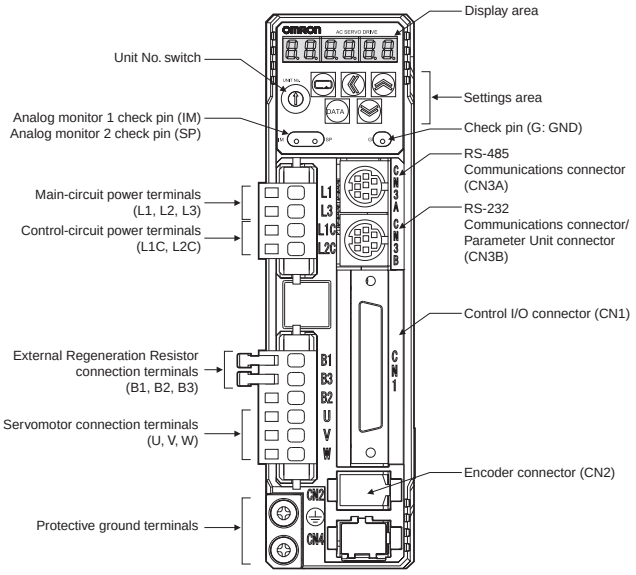

Main Circuit Connector (CNA)

Symbol	Name
L1	Main circuits power supply input
L2	
L3	
L1C	Control circuit power supply input
L2C	

Servomotor Connector (CNB)

Symbol	Name
B1	External Regeneration Resistor connection terminals
B2	
B3	
U	Servomotor connection terminals
V	
W	
⏚	
⏚	Frame ground

Display Area

A 6-digit 7-segment LED display shows the Servo Drive status, alarm codes, parameters, and other information.

Check Pins (IM, SP, and G)

The actual motor speed, command speed, torque, and number of accumulated pulses can be measured based on the analog voltage level by using an oscilloscope. The type of signal to output and the output voltage level are set in the SP Selection (Pn07) and IM Selection (Pn08) parameters.

Unit No. Switch

The Servo Drive number in serial communications is set to a value from 0 to F. This number is used to identify which Servo Drive the computer is accessing in RS-232/485 communications between multiple Servo Drives and a computer.

CN1 Control Inputs

Pin No.	Symbol	Name
1	+24VCW	24-V Open-collector Input for Command Pulse
2	+24VCCW	24-V Open-collector Input for Command Pulse
3	+CW/PULS/FA	Reverse Pulses Input/ Feed Pulses Input, or 90° Phase Difference Pulse Input (Phase A)
4	–CW/PULS/FA	
5	+CCW/SIGN/FB	Forward Pulse Input/ Direction Signal, or 90° Phase Difference Pulse Input (Phase B)
6	–CCW/SIGN/FB	
7	+24VIN	12 to 24-VDC Power Supply Input
8	NOT	Reverse Drive Prohibit Input
9	POT	Forward Drive Prohibit Input
14	REF	Speed Command Input
	TREF	Torque Command Input
	VLIM	Speed Limit Input
15	AGND	Analog Input Ground
16	PCL	Forward Torque Limit Input
	TREF	Torque Command Input
17	AGND	Analog Input Ground
18	NCL	Reverse Torque Limit Input
20	SEN	Sensor ON Input
13	SENGND	
26	VZERO	Zero Speed Designation Input
	DFSEL	Vibration Filter Switch
	PNSEL	Speed Command Rotation Direction Switch
27	GSEL	Gain Switch
	TLSEL	Torque Limit Switch
28	GESEL	Electronic Gear Switch
	VSEL3	Internally Set Speed Selection 3
29	RUN	RUN Command
30	ECRST	Deviation Counter Reset Input
	VSEL2	Internally Set Speed Selection 2
31	RESET	Alarm Reset Input
32	TVSEL	Control Mode Switch Input
33	IPG	Pulse Prohibit Input
	VSEL1	Internally Set Speed Selection 1
42	BAT	Backup Battery Input
43	BATGND	
44	+CWLD	Reverse Pulse (input for line driver only)
45	–CWLD	
46	+CCWLD	Forward Pulse (input for line driver only)
47	–CCWLD	

● CN1 Control Outputs

Pin No.	Symbol	Name
10	BKIRCOM	Brake Interlock Output
11	BKIR	
12	OUTM1	General-purpose Output 1
19	Z	Phase-Z Output (open collector)
25	ZCOM	Phase-Z Output (open collector) common
21	+A	Encoder Phase-A + Output
22	–A	Encoder Phase-A – Output
48	–B	Encoder Phase-B – Output
49	+B	Encoder Phase-B + Output
23	+Z	Encoder Phase-Z + Output
24	–Z	Encoder Phase-Z – Output
35	READY	Servo Ready Output
34	READYCOM	
37	/ALM	Alarm Output
36	ALMCOM	
39	INP	Positioning Completed Output
38	INPCOM	
39	TGON	Servomotor Rotation Speed Detection Output
38	TGONCOM	
40	OUTM2	General-purpose Output 2
41	COM	General-purpose Output Common
Shell	FG	Frame Ground

● Encoder Connector Specifications (CN2)

Pin No.	Symbol	Name
1	E5V	Encoder power supply +5 V
2	E0V	Encoder power supply GND
3	BAT+	Battery +
4	BAT–	Battery –
5	PS+	Encoder +phase S input
6	PS–	Encoder –phaseS input
Shell	FG	Shield ground

● Communications Connector Specifications (CN3A)

Pin No.	Symbol	Name
4	GND	Ground
7	B+	RS-485 communications data
8	A–	

● Parameter Unit Connector Specifications (CN3B)

Pin No.	Symbol	Name
3	TXD	RS-232 send data
4	GND	Ground
5	RXD	RS-232 receive data
7	B+	RS-485 communications data
8	A–	

● Protective Functions

Error detection	
Control power supply undervoltage	
Overvoltage	
Undervoltage	
Overcurrent	
Overheating	
Overload	
Regeneration overload	
Encoder communications error	
Encoder communications data error	
Position deviation exceeded	
Overspeed	
Command pulse multiplying error	
Overrun limit error	
EEPROM parameter error	
EEPROM check code error	
Drive prohibit input	
Excessive analog input	
Absolute encoder system down error	
Absolute encoder counter overflow error	ABS
Absolute encoder overspeed error	ABS
Absolute encoder one-turn counter error	ABS
Absolute encoder multi-turn counter error	ABS
Absolute encoder status error	ABS
Encoder phase Z error	
Encoder PS signal error	
PCL input exceeded	
NCL input exceeded	
Motor automatic recognition error	
CPU error	
Encoder error	

Parameter

● R88A-RP02G : Parameter Unit Part Names

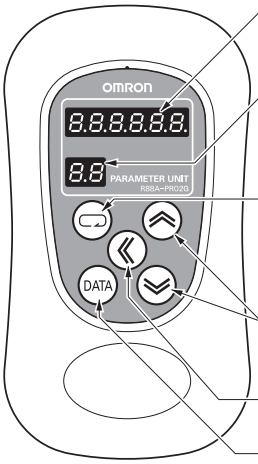

LED Display (6 Digits)
If an error occurs, all digits will flash and the display will switch to the error display.

Unit No. Display (2 Digits)
Displays the selected Servo Drive's unit number set in the Unit No. Setting (Pn00). In Parameter Setting Mode, displays the 2-digit parameter number.

Mode Key
Switches between the following six modes.
- Monitor Mode
- Autotuning Mode
- Parameter Setting Mode
- Auxiliary Function Mode
- Parameter Write Mode
- Copy Mode

Increment/Decrement Key
Increases or decreases parameter numbers or set values.

Shift Key
Shifts the digit being changed to the left.

Data Key
Switches between the parameter and setting displays, saves settings, etc.

● Function Selection Parameters

Parameter name	Explanation
Unit No. Setting	Set the unit number.
Default Display	Set the data to display on the Parameter Unit when the power supply is turned ON.
Control Mode Selection	Set the control mode to be used.
Torque Limit Selection	Set the torque limit method for forward and reverse operation.
Drive Prohibit Input Selection	You can stop the Servomotor from rotating beyond the device's travel distance range by setting limit inputs.
Command Speed Selection	Select the speed command when using speed control.
Zero Speed Designation/ Speed Command Direction Switch	Set the function of the Zero-speed Designation Input (VZERO).
SP Selection	Select the relation between the output voltage level and the speed.
IM Selection	Select the relation between the output voltage level and the torque or number of pulses.
General-purpose Output 2 Selection	Assign the function of General-purpose Output 2 (OUTM2).
General-purpose Output 1 Selection	Assign the function of General-purpose Output 1 (OUTM1).
Operation Switch When Using Absolute Encoder	Set the operating method for the 17-bit absolute encoder.
RS-232 Baud Rate Setting	Select the baud rate for the RS-232 port.
RS-485 Baud Rate Setting	Select the baud rate for RS-485 communications.
Front Key Protection Setting	Front panel key operation can be limited to Monitor Mode.

● Gain Parameters

Parameter name	Explanation
Position Loop Gain	Set to adjust position control system responsiveness.
Speed Loop Gain	Set to adjust speed loop responsiveness.
Speed Loop Integration Time Constant	Set to adjust the speed loop integration time constant.
Speed Feedback Filter Time Constant	The encoder signal is converted to the speed signal via the low pass filter.
Torque Command Filter Time Constant	Set to adjust the primary lag filter time constant for the torque command section.
Feed-forward Amount	Set the position control feed-forward compensation value.
Feed-forward Command Filter	Set the time constant of the primary lag filter used in the speed feed-forward section.
Position Loop Gain 2	Set to adjust position control system responsiveness.
Speed Loop Gain 2	Set to adjust speed loop responsiveness.
Speed Loop Integration Time Constant 2	Set to adjust the speed loop integration time constant.
Speed Feedback Filter Time Constant 2	The encoder signal is converted to the speed signal via the low pass filter.
Torque Command Filter Time Constant 2	Set to adjust the primary lag filter time constant for the torque command section.
Notch Filter 1 Frequency	Set the notch frequency of the resonance suppression notch filter.
Notch Filter 1 Width	Set the width to one of five levels for the resonance suppression notch filter. Normally, use the default setting.
Inertia Ratio	Set the ratio between the mechanical system inertia and the Servomotor rotor inertia.
Realtime Autotuning Mode Selection	Set the operating mode for realtime autotuning.
Realtime Autotuning Machine Rigidity Selection	Set the machine rigidity to one of 16 levels during realtime autotuning. The higher the machine rigidity, the greater the setting needs to be. The higher the setting, the higher the responsiveness. When the Parameter Unit is used, 0 cannot be set.
Adaptive Filter Selection	Enable or disable the adaptive filter.
Vibration Filter Selection	Vibration filters 1 and 2 can be switched.
Autotuning Operation Setting	Set the operating pattern for autotuning.
Overrun Limit Setting	Set the allowable operating range for the Servomotor. The overrun limit function is disabled if the parameter is set to 0.
Instantaneous Speed Observer Setting	Set the instantaneous speed observer.
Notch Filter 2 Frequency	Set the notch frequency of the resonance suppression notch filter.
Notch Filter 2 Width	Set the notch filter width to one of five levels for the resonance suppression notch filter. Normally, use the default setting.
Notch Filter 2 Depth	Set the depth of the resonance suppression notch filter.
Vibration Frequency 1	Set vibration frequency 1to suppress vibration at the end of the load in dampening control.
Vibration Filter 1 Setting	Set vibration filter 1 to suppress vibration at the end of the load in dampening control.
Vibration Frequency 2	Set vibration frequency 2 to suppress vibration at the end of the load in dampening control.
Vibration Filter 2 Setting	Set vibration filter 2 to suppress vibration at the end of the load in dampening control.

Parameter name	Explanation
Adaptive Filter Table Number Display	Displays the table entry number corresponding to the frequency for the adaptive filter. This parameter is set automatically and cannot be changed if the adaptive filter is enabled (i.e., if Realtime Autotuning Mode Selection (Pn21) is 1 to 3 or 7).
Gain Switching Input Operating Mode Selection	Enable or disable gain switching. If gain switching is enabled, the setting of the Gain Switch Setting (Pn31) is used as the condition for switching between gain 1 and gain 2.
Gain Switch 1 Setting	Select the condition for switching between gain 1 and gain 2. The details depend on the control mode.
Gain Switch 1 Time	This parameter is enabled when the Gain Switch 1 Setting (Pn31) is 3 to 10. Set the delay time from the moment the condition set in the Gain Switch 1 Setting (Pn31) is not met until returning to gain 1.
Gain Switch 1 Level Setting	This parameter is enabled when the Gain Switch 1 Setting (Pn31) is 3 to 6, 9, or 10. Set the judgment level for switching between gain 1 and gain 2. The unit for the setting depends on the condition set in the Gain Switch 1 Setting (Pn31).
Gain Switch 1 Hysteresis Setting	Set the hysteresis width above and below the judgment level set in the Gain Switch 1 Level Setting (Pn33).
Position Loop Gain Switching Time	When switching between gain 1 and gain 2 is enabled, set the phased switching time only for the position loop gain at gain switching.
Gain Switch 2 Setting	Select the condition for switching between gain 1 and gain 2 in speed control mode. The Gain Switching Input Operating Mode Selection (Pn30) must be set to 1 (enabled).
Gain Switch 2 Time	This parameter is enabled when Gain Switch 2 Setting (Pn36) is 3 to 5. Set the delay time for returning from gain 2 to gain 1.
Gain Switch 2 Level Setting	This parameter is enabled when Gain Switch 2 Setting (Pn36) is 3 to 5. Set the judgment level for switching between gain 1 and gain 2. The unit depends on the setting of Gain Switch 2 Setting (Pn36).
Gain Switch 2 Hysteresis Setting	Set the hysteresis width above and below the judgment level set in the Gain Switch 2 Level Setting (Pn38). The unit depends on the setting of the Gain Switch 2 Setting (Pn36).
Jog Speed	Set the speed for jogging.

● Position Control Parameters

Parameter name	Explanation
Command Pulse Input Selection	Selects whether to use photocoupler or line-driver-only input for the command pulse input. **Note:** To use a Servo Relay Unit Cable, set this parameter to 0 (photocoupler input).
Command Pulse Rotation Direction Switch	Set the Servomotor rotation direction for the command pulse input.
Command Pulse Mode	Set the form of the pulse inputs sent as command to the Servo Drive from a position controller.
Command Pulse Prohibited Input Setting	Enable or disable the pulse disable input (IPG).
Encoder Divider Numerator Setting	Set the number of encoder pulses (+A, –A, –B, +B) output from the Servo Drive for each Servomotor rotation.
Encoder Divider Denominator Setting	
Encoder Output Direction Switch	Set the B-phase logic for pulse output (–B, +B).
Electronic Gear Ratio Numerator 1	Set the pulse rate for command pulses and Servomotor travel distance. If Pn48 or Pn49 is 0, the encoder resolution is set to a numerator. $\dfrac{\text{Electronic Gear Ratio Numerator 1 (Pn48) or Electronic Gear Ratio Numerator 2 (Pn49)} \times 2^{\text{Electronic Gear Ratio Numerator Exponent (Pn4A)}}}{\text{Electronic Gear Ratio Denominator (Pn4B)}}$
Electronic Gear Ratio Numerator 2	
Electronic Gear Ratio Numerator Exponent	
Electronic Gear Ratio Denominator	
Position Command Filter Time Constant Setting	Set the time constant for the primary lag filter for the command pulse input. If the parameter is set to 0, the filter will not function. The larger the setting, the larger the time constant.
Smoothing Filter Setting	Select the FIR filter time constant used for the command pulse input. The higher the setting, the smoother the command pulses.
Deviation Counter Reset Condition Setting	Set the deviation counter reset conditions.

Speed and Torque Control Parameters

Parameter name	Explanation
Speed Command Scale	Set the relation between the voltage applied to the Speed Command Input (REF) and the Servomotor speed.
Command Speed Rotation Direction Switch	Set to reverse the polarity of the speed command input (REF).
Speed Command Offset Adjustment	Set to adjust the offset of the Speed Command Input (REF).
No. 1 Internally Set Speed	Set the No. 1 internally set rotation speed.
No. 2 Internally Set Speed	Set the No. 2 internally set rotation speed.
No. 3 Internally Set Speed	Set the No. 3 internally set rotation speed.
No. 4 Internally Set Speed	Set the No. 4 internally set rotation speed. For torque control (when Pn5B = 0), set the speed limit.
No. 5 Internally Set Speed	Set the No. 5 internally set rotation speed.
No. 6 Internally Set Speed	Set the No. 6 internally set rotation speed.
No. 7 Internally Set Speed	Set the No. 7 internally set rotation speed.
No. 8 Internally Set Speed	Set the No. 8 internally set rotation speed.
Speed Command Filter Time Constant	Set the primary lag filter time constant in the Speed Command Input (REF: CN1 pin 14).
Soft Start Acceleration Time	Set the acceleration time for the speed command.
Soft Start Deceleration Time	Set the deceleration time for the speed command.
S-curve Acceleration/ Deceleration Time Setting	Set the pseudo-S-curve acceleration/ deceleration value to add to the speed command to enable smooth operation.
Torque Command/Speed Limit Selection	Select the input for the torque command and speed limit.
Torque Command Scale	Set the relation between the voltage applied to the Speed Limit Input (VLIM) and the Servomotor speed.
Torque Output Direction Switch	Set to reverse the polarity of the Torque Command Input (REF/TREF or PCL/TREF).
No. 1 Torque Limit	Set the limit to the Servomotor's maximum torque.
No. 2 Torque Limit	Set the limit to the Servomotor's maximum torque.

Sequence Parameters

Parameter name	Explanation
Positioning Completion Range	Set the range for the Positioning Completed Output (INP).
Zero Speed Detection	Set the rotation speed to output for the general-purpose output (zero speed detection output or speed coincidence output).
Rotation Speed for Motor Rotation Detection	Set the rotation speed for the Servomotor Rotation Detection Output (TGON) for Internally Set Speed Control.
Positioning Completion Condition Setting	Set the operation for positioning completion output (INP).
Undervoltage Alarm Selection	Select whether to activate the main power supply undervoltage function (alarm code 13) if the main power supply is interrupted for the Momentary Hold Time (Pn6D) during Servo ON.
Stop Selection for Drive Prohibition Input	Set the operation used to decelerate to a stop after the Forward Drive Prohibit Input (POT) or Reverse Drive Prohibit Input (NOT) has been received.
Stop Selection with Main Power OFF	Set one of the following operations for after the main power supply is cut off if the Undervoltage Alarm Selection (Pn65) is set to 0. ·Operation during deceleration and after stopping ·Clearing the deviation counter
Stop Selection for Alarm Generation	Set the operation to be performed after stopping or during deceleration when any protective function of the Servo Drive operates and an error occurs.
Stop Selection with Servo OFF	Set the operation to be performed after the Servomotor turns OFF (i.e., RUN ON to OFF). The relation between set values, operation, and deviation counter processing for this parameter is the same as for the Stop Selection with Main Power OFF (Pn67).
Brake Timing when Stopped	When the Servomotor is stopped and the RUN Command Input (RUN) is turned OFF, the Brake Interlock Signal (BKIR) will turn OFF, and the Servomotor will turn OFF after waiting for the time period set for this parameter (i.e., setting × 2 ms).
Brake Timing during Operation	When the Servomotor is stopped and the RUN Command Input (RUN) is turned OFF, the Servomotor will decelerate to reduce rotation speed, and the Brake Interlock Signal (BKIR) will turn OFF after the set time for the parameter (i.e., setting × 2 ms) has elapsed. BKIR will also turn OFF if the speed drops to 30 r/min or lower before the set time elapses.
Regeneration Resistor Selection	Set whether to use a built-in resistor or to add an External Regeneration Resistor.
Momentary Hold Time	Set the amount of time required until shutoff is detected if the main power supply continues to shut off.
Emergency Stop Torque	Set the torque limit for the following cases. ·Drive prohibit deceleration with Stop Selection for Drive Prohibit Input (Pn66) set to 2. ·Deceleration with Stop Selection with Main Power OFF (Pn67) set to 8 or 9. ·Deceleration with Stop Selection with Servo OFF (Pn69) set to 8 or 9.
Deviation Counter Overflow Level	Set the deviation counter overflow level.
Speed Command/Torque Command Input Overflow Level Setting	Set the overflow level for Speed Command Input (REF) or Torque Command Input (TREF) using voltage after offset adjustment.
Overload Detection Level Setting	Set the overload detection level.
Overspeed Detection Level Setting	Set the overspeed detection level.

Dimensions

(Unit: mm)

●Servo Drives

- **Single-phase 100 VAC (50 to 100 W)**
  R88D-GTA5L
  R88D-GT01L
- **Single-phase 200 VAC (50 to 200 W)**
  R88D-GT01H
  R88D-GT02H

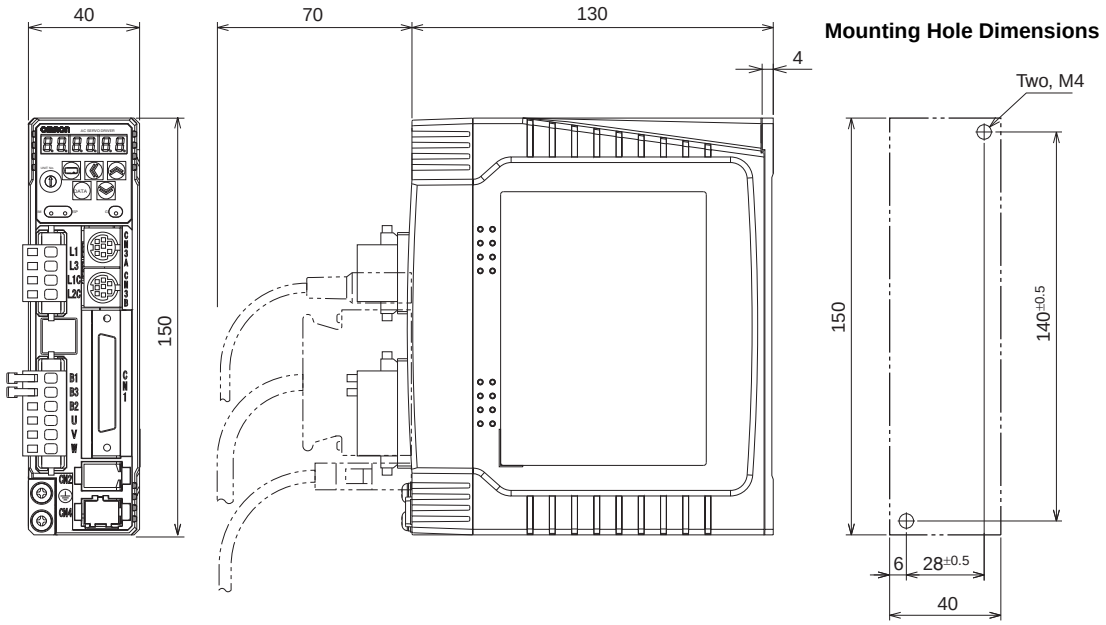

- **Single-phase 100 VAC (200 W)**
  R88D-GT02L
- **Single-phase 200 VAC (400 W)**
  R88D-GT04H

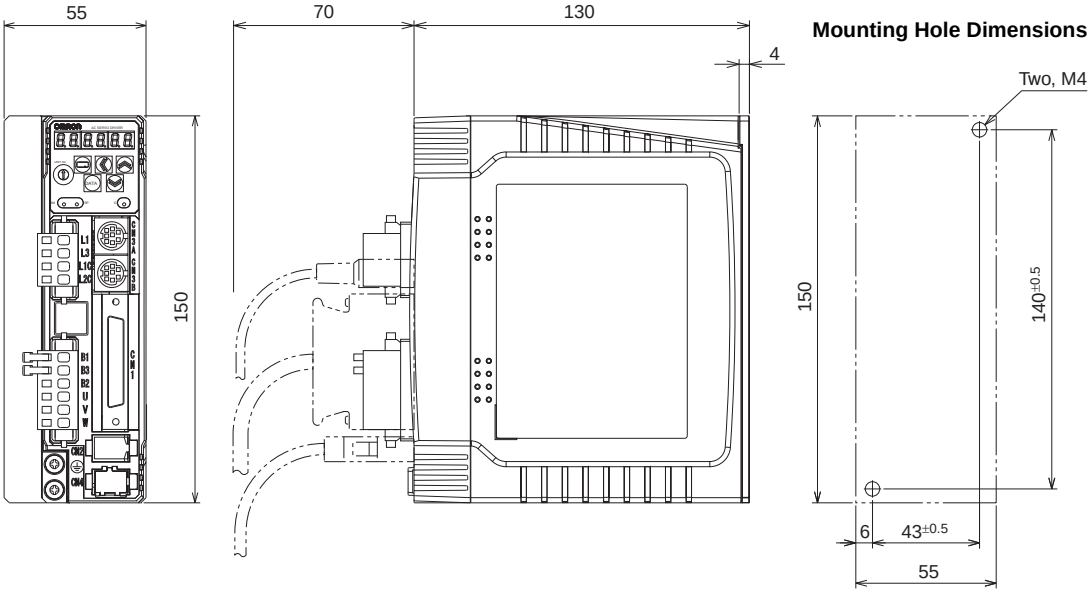

- **Single-phase 100 VAC (400 W)**
  R88D-GT04L
- **Single-phase/Three-phase 200 VAC (750 W)**
  R88D-GT08H

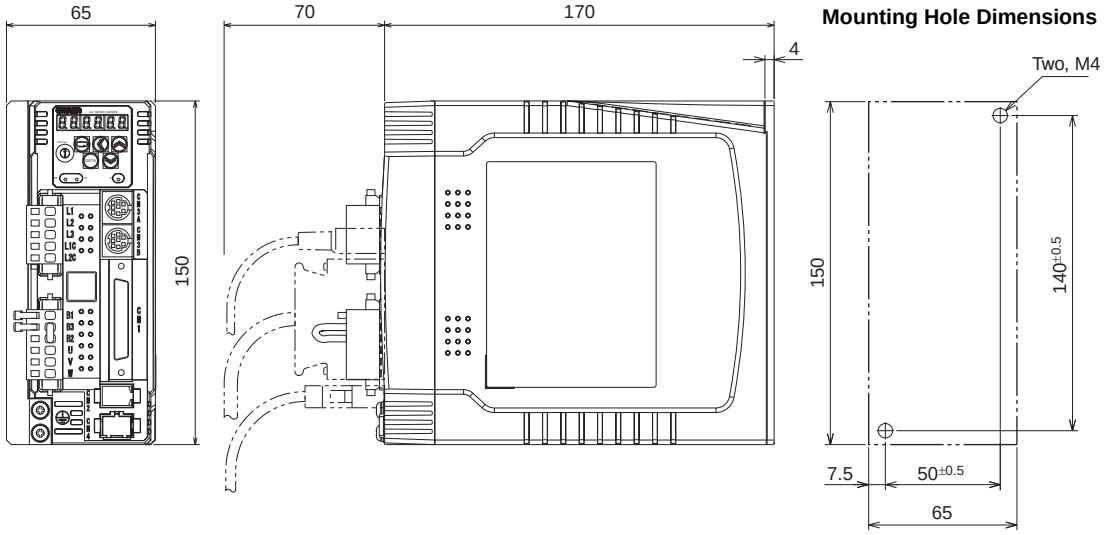

- **Single-phase/Three-phase 200 VAC (900 W to 1.5 kW)**
  R88D-GT10H
  R88D-GT15H

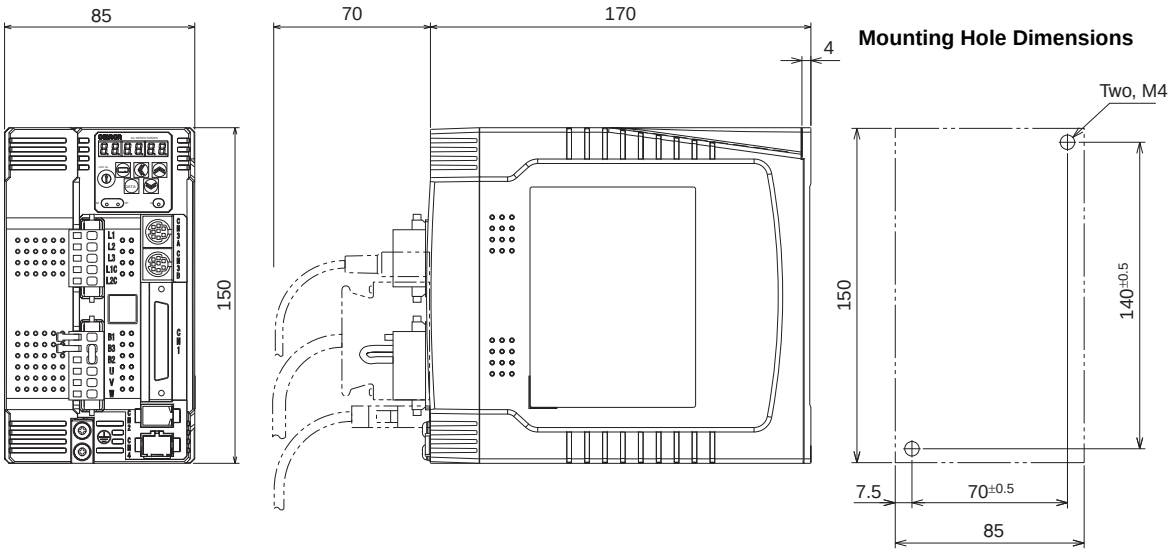

- **Three-phase 200 VAC (2 kW)**
  R88D-GT20H

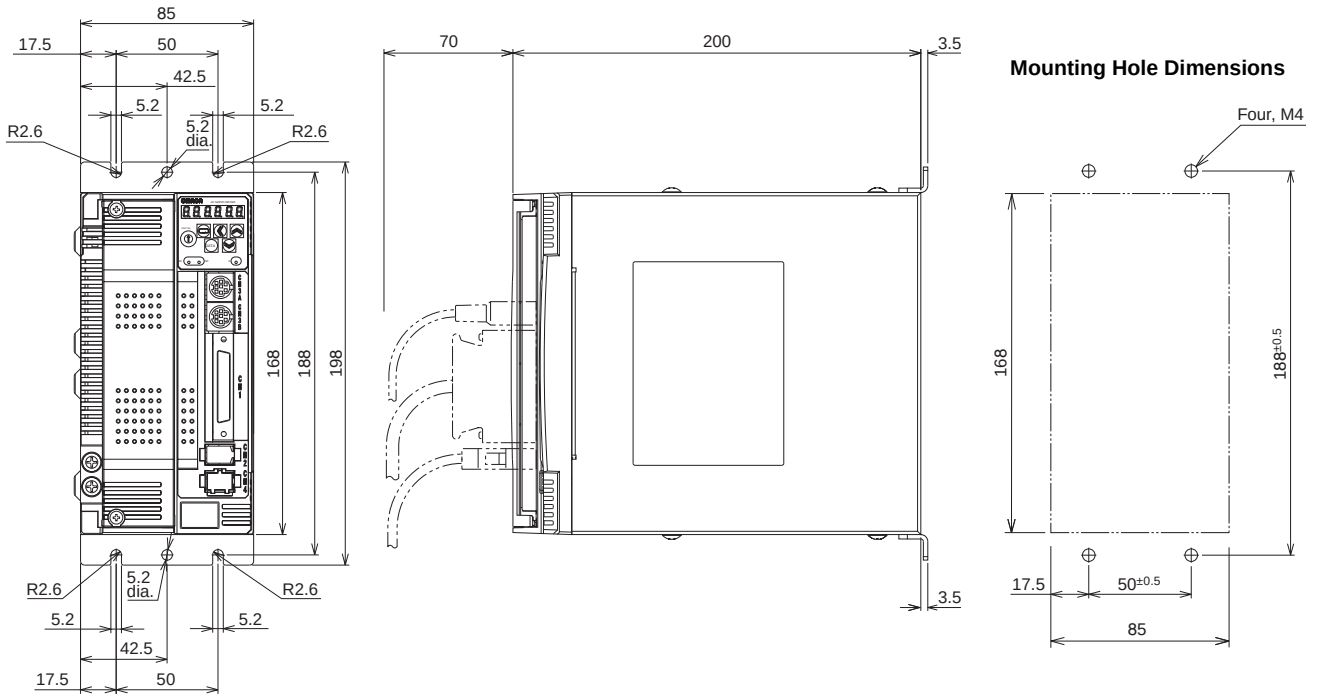

- **Three-phase 200 VAC (2 to 5 kW)**
  R88D-GT30H/-GT50H

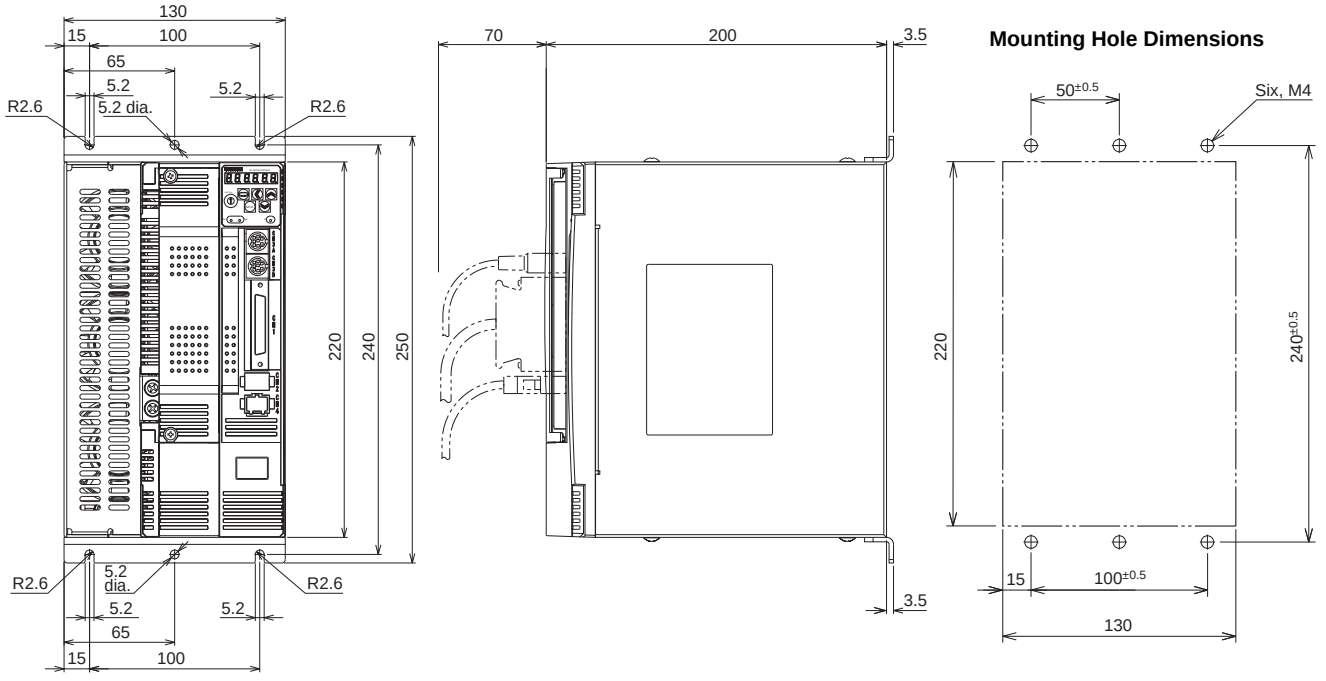

- **Three-phase 200 VAC (7.5 kW)**
  R88D-GT75H
  Front Panel Mounting (Using Mounting Brackets)

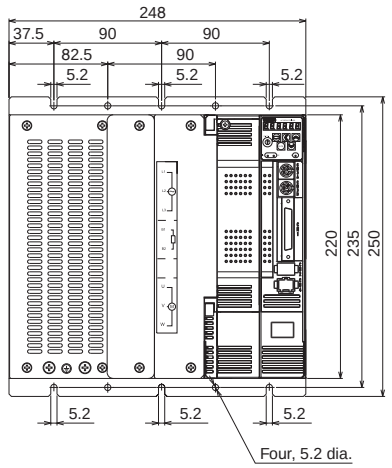

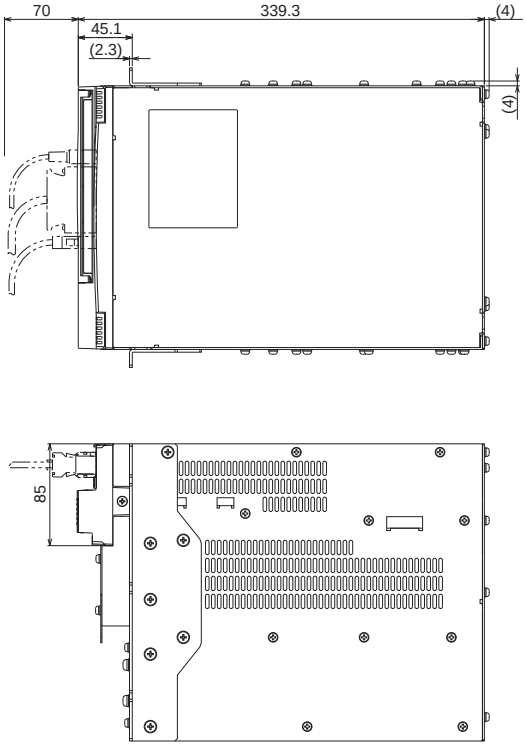

Mounting Hole Dimensions

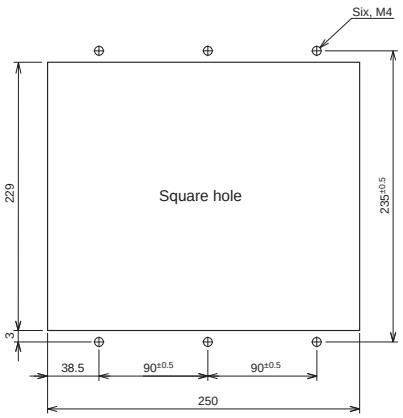

3,000-r/min Cylindrical Servomotors

• 50 W/100 W

INC

R88M-G05030H (-S2)
R88M-G10030L (-S2)
R88M-G10030H (-S2)
R88M-G05030H-B (S2)
R88M-G10030L-B (S2)
R88M-G10030H-B (S2)

ABS

R88M-G05030T (-S2)
R88M-G10030S (-S2)
R88M-G10030T (-S2)
R88M-G05030T-B (S2)
R88M-G10030S-B (S2)
R88M-G10030T-B (S2)

Model	LL	LN
R88M-G05030□	72	26.5
R88M-G10030□	92	46.5
R88M-G05030□-B	102	26.5
R88M-G10030□-B	122	46.5

*The empty bax in the L, H, L, T or S.
Note: The standard models have a straight shaft. A model with a key and tap is indicated by adding "S2" to the end of the model number.

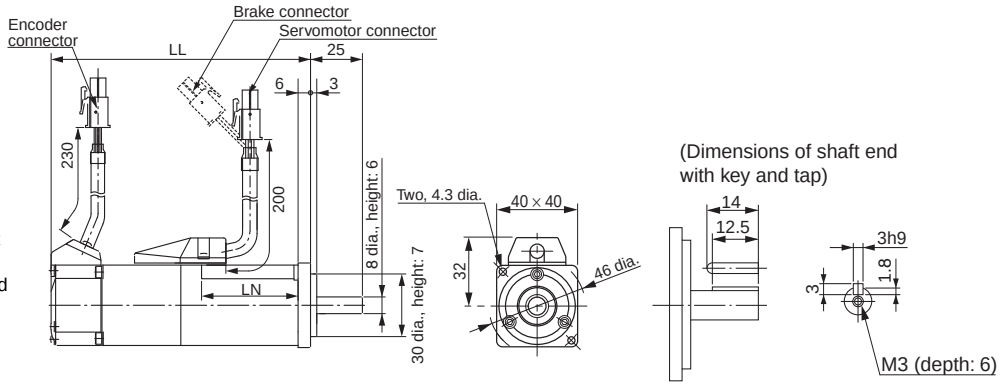

• 200 W/400 W/750 W

INC

R88M-G20030L (-S2)
R88M-G40030L (-S2)
R88M-G20030H (-S2)
R88M-G40030H (-S2)
R88M-G75030H (-S2)
R88M-G20030L-B (S2)
R88M-G40030L-B (S2)
R88M-G20030H-B (S2)
R88M-G40030H-B (S2)
R88M-G75030H-B (S2)

ABS

R88M-G20030S (-S2)
R88M-G40030S (-S2)
R88M-G20030T (-S2)
R88M-G40030T (-S2)
R88M-G75030T (-S2)
R88M-G20030S-B (S2)
R88M-G40030S-B (S2)
R88M-G20030T-B (S2)
R88M-G40030T-B (S2)
R88M-G75030T-B (S2)

Model	LL	LR	S	D1	D2	C	G	Z	KL1	QK	b	h	M	t1	L
R88M-G20030□	79.5	30	11	70	50	60	6.5	4.5	43	18	4h9	4	M4	2.5	8
R88M-G40030□	99		14							22.5	5h9	5	M5	3	10
R88M-G75030□	112.2	35	19	90	70	80	8	6	53	22	6h9	6		3.5	
R88M-G20030□-B	116	30	11	70	50	60	6.5	4.5	43	18	4h9	4	M4	2.5	8
R88M-G40030□-B	135.5		14							22.5	5h9	5	M5	3	10
R88M-G75030□-B	149.2	35	19	90	70	80	8	6	53	22	6h9	6		3.5	

*The empty bax in the L, H, L, T or S.
Note: The standard models have a straight shaft. A model with a key and tap is indicated by adding "S2" to the end of the model number.

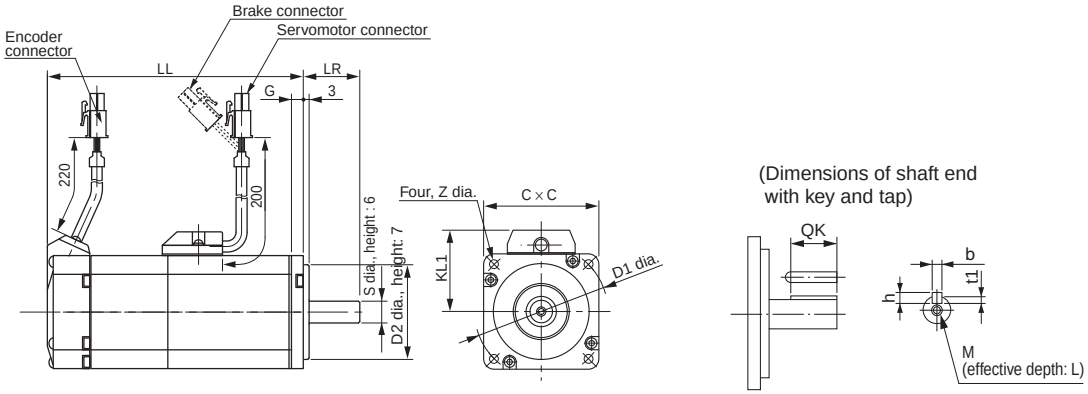

• **1 kW/1.5 kW/2 kW**

ABS

R88M-G1K030T (-S2)
R88M-G1K530T (-S2)
R88M-G2K030T (-S2)
R88M-G1K030T-B (S2)
R88M-G1K530T-B (S2)
R88M-G2K030T-B (S2)

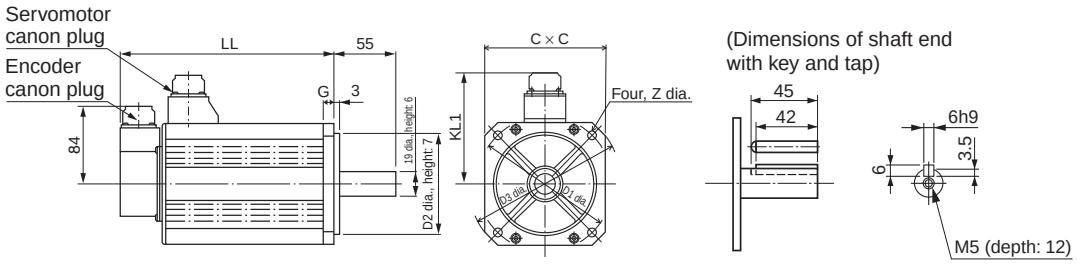

Model	LL	D1	D2	C	D3	G	KL1	Z
R88M-G1K030T	175	100	80	90	120	7	98	6.6
R88M-G1K530T	180	115	95	100	135	10	103	9
R88M-G2K030T	205							
R88M-G1K030T-B	200	100	80	90	120	7	98	6.6
R88M-G1K530T-B	205	115	95	100	135	10	103	9
R88M-G2K030T-B	230							

Note: The standard models have a straight shaft.
A model with a key and tap is indicated by adding “S2” to the end of the model number.

• **3 kW**

ABS

R88M-G3K030T (-S2)
R88M-G3K030T-B (S2)

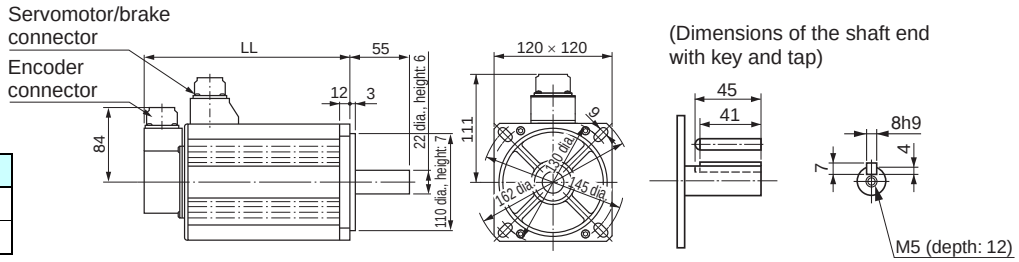

Model	LL
R88M-G3K030T	217
R88M-G3K030T-B	242

Note: The standard models have a straight shaft.
A model with a key and tap is indicated by adding “S2” to the end of the model number.

• **4 kW/5 kW**

ABS

R88M-G4K030T (-S2)
R88M-G5K030T (-S2)
R88M-G4K030T-B (S2)
R88M-G5K030T-B (S2)

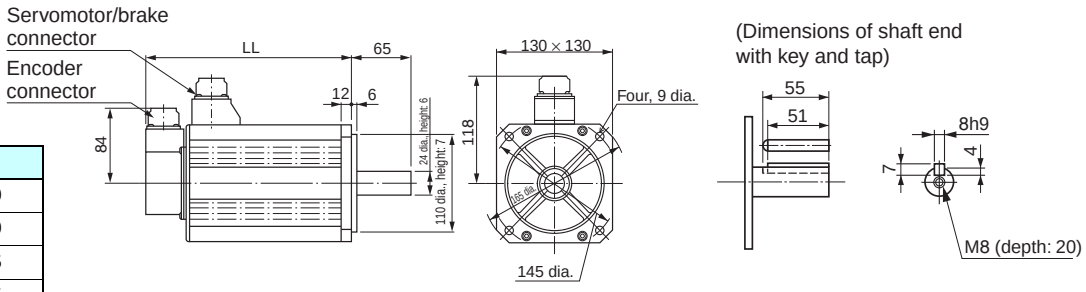

Model	LL
R88M-G4K030T	240
R88M-G5K030T	280
R88M-G4K030T-B	265
R88M-G5K030T-B	305

Note: The standard models have a straight shaft.
A model with a key and tap is indicated by adding “S2” to the end of the model number.

3,000-r/min Flat Servomotors

- **100 W/200 W/400 W**

INC	ABS
R88M-GP10030L (-S2)	R88M-GP10030S (-S2)
R88M-GP20030L (-S2)	R88M-GP20030S (-S2)
R88M-GP40030L (-S2)	R88M-GP40030S (-S2)
R88M-GP10030H (-S2)	R88M-GP10030T (-S2)
R88M-GP20030H (-S2)	R88M-GP20030T (-S2)
R88M-GP40030H (-S2)	R88M-GP40030T (-S2)
R88M-GP10030L-B (S2)	R88M-GP10030S-B (S2)
R88M-GP20030L-B (S2)	R88M-GP20030S-B (S2)
R88M-GP40030L-B (S2)	R88M-GP40030S-B (S2)
R88M-GP10030H-B (S2)	R88M-GP10030T-B (S2)
R88M-GP20030H-B (S2)	R88M-GP20030T-B (S2)
R88M-GP40030H-B (S2)	R88M-GP40030T-B (S2)

Model	LL	LR	S	D1	D2	C	F	G	KL1	Z	QK	b	h	t1	M	L
R88M-GP10030L R88M-GP10030H	60.5	25	8	70	50	60	3	7	43	4.5	12.5	3h9	3	1.8	M3	6
R88M-GP10030S R88M-GP10030T	87.5															
R88M-GP20030L R88M-GP20030H	67.5	30	11	90	70	80	5	8	53	5.5	18	4h9	4	2.5	M4	8
R88M-GP20030S R88M-GP20030T	94.5															
R88M-GP40030L R88M-GP40030H	82.5		14								22.5	5h9	5	3.0	M5	10
R88M-GP40030S R88M-GP40030T	109.5															
R88M-GP10030L-B R88M-GP10030H-B	84.5	25	8	70	50	60	3	7	43	4.5	12.5	3h9	3	1.8	M3	6
R88M-GP10030S-B R88M-GP10030T-B	111.5															
R88M-GP20030L-B R88M-GP20030H-B	100	30	11	90	70	80	5	8	53	5.5	18	4h9	4	2.5	M4	8
R88M-GP20030S-B R88M-GP20030T-B	127															
R88M-GP40030L-B R88M-GP40030H-B	115		14								22.5	5h9	5	3.0	M5	10
R88M-GP40030S-B R88M-GP40030T-B	142															

Note: The standard models have a straight shaft. A model with a key and tap is indicated by adding “S2” to the end of the model number.

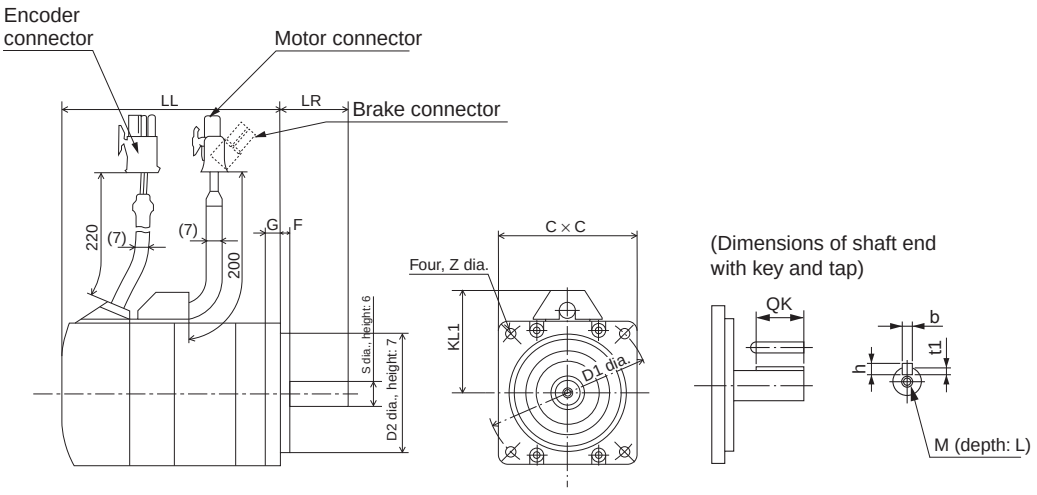

2,000-r/min Cylindrical Servomotors

• 200 VAC: 1 kW/1.5 kW

ABS

R88M-G1K020T (-S2)
R88M-G1K520T (-S2)
R88M-G1K020T-B (S2)
R88M-G1K520T-B (S2)

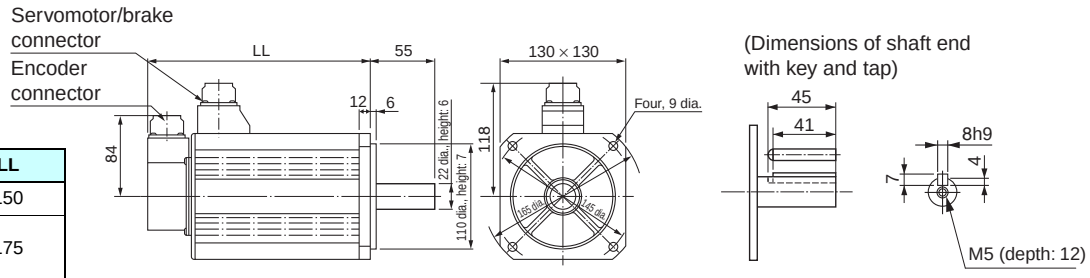

Model	LL
R88M-G1K020T	150
R88M-G1K520T	175
R88M-G1K020T-B	
R88M-G1K520T-B	200

Note: The standard models have a straight shaft.
A model with a key and tap is indicated by adding “S2” to the end of the model number.

• 200 VAC: 2 kW/3 kW

ABS

R88M-G2K020T (-S2)
R88M-G3K020T (-S2)
R88M-G2K020T-B (S2)
R88M-G3K020T-B (S2)

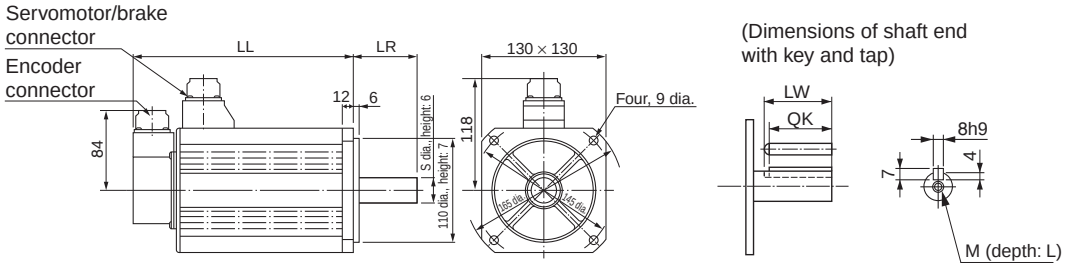

Model	LL	LR	S	LW	QK	M	L
R88M-G2K020T	200	55	22	45	41	M5	12
R88M-G3K020T	250	65	24	55	51	M8	20
R88M-G2K020T-B	225	55	22	45	41	M5	12
R88M-G3K020T-B	275	65	24	55	51	M8	20

Note: The standard models have a straight shaft.
A model with a key and tap is indicated by adding “S2” to the end of the model number.

• 200 VAC : 4 kW/5 kW

ABS

R88M-G4K020T (-S2)
R88M-G5K020T (-S2)
R88M-G4K020T-B (S2)
R88M-G5K020T-B (S2)

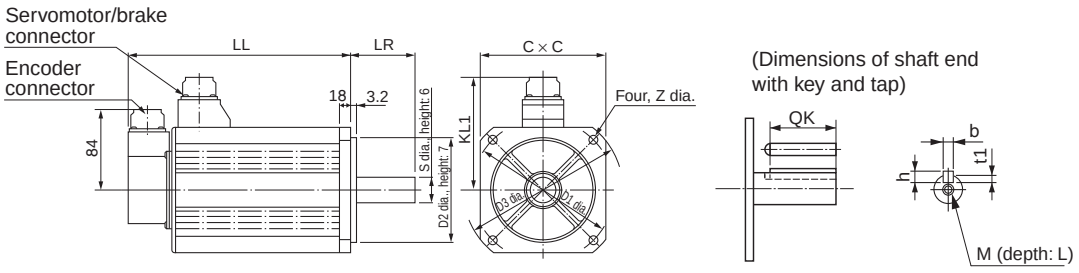

Model	LL	LR	S	D1	D2	C	D3	KL1	Z	QK	b	h	t1	M	L
R88M-G4K020T	242	65	28	165	130	150	190	128	11	51	8h9	7	4	M8	20
R88M-G5K020T	225	70	35	200	114.3	176	233	143	13.5	50	10h9	8	5	M12	25
R88M-G4K020T-B	267	65	28	165	130	150	190	128	11	51	8h9	7	4	M8	20
R88M-G5K020T-B	250	70	35	200	114.3	176	233	143	13.5	50	10h9	8	5	M12	25

Note: The standard models have a straight shaft. A model with a key and tap is indicated by adding “S2” to the end of the model number.

1,500-r/min Cylindrical Servomotors

- **7.5 kW**

ABS

R88M-G7K515T (-S2)
R88M-G7K515T-B (S2)

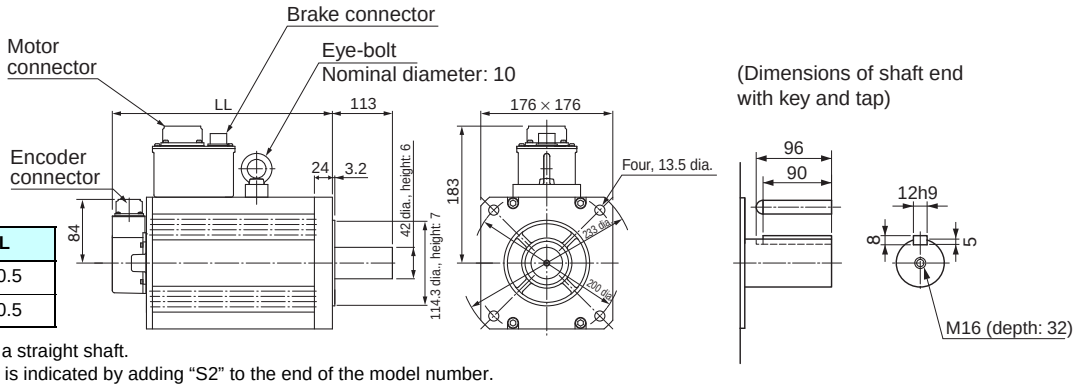

Model	LL
R88M-G7K515T	340.5
R88M-G7K515T-B	380.5

Note: The standard models have a straight shaft.
A model with a key and tap is indicated by adding “S2” to the end of the model number.

1,000-r/min Cylindrical Servomotors

- **900 W/2 kW**

ABS

R88M-G90010T (-S2)
R88M-G2K010T (-S2)
R88M-G90010T-B (S2)
R88M-G2K010T-B (S2)

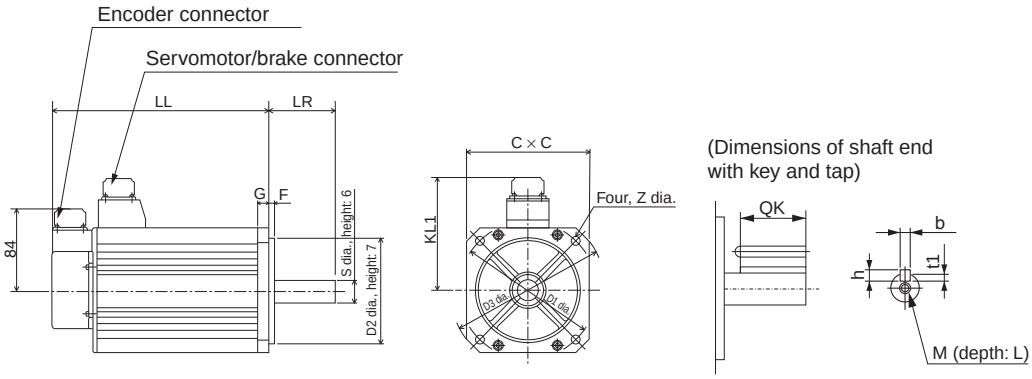

Model	LL	LR	S	D1	D2	C	D3	F	G	KL1	Z	QK	b	h	t1	M	L
R88M-G90010T	175	70	22	145	110	130	165	6	12	118	9	41	8h9	7	4	M5	12
R88M-G2K010T	182	80	35	200	114.3	176	233	3.2	18	143	13.5	50	10h9	8	5	M12	25
R88M-G90010T-B	200	70	22	145	110	130	165	6	12	118	9	41	8h9	7	4	M5	12
R88M-G2K010T-B	207	80	35	200	114.3	176	233	3.2	18	143	13.5	50	10h9	8	5	M12	25

Note: The standard models have a straight shaft. A model with a key and tap is indicated by adding “S2” to the end of the model number.

- **3 kW**

ABS

R88M-G3K010T (-S2)
R88M-G3K010T-B (S2)

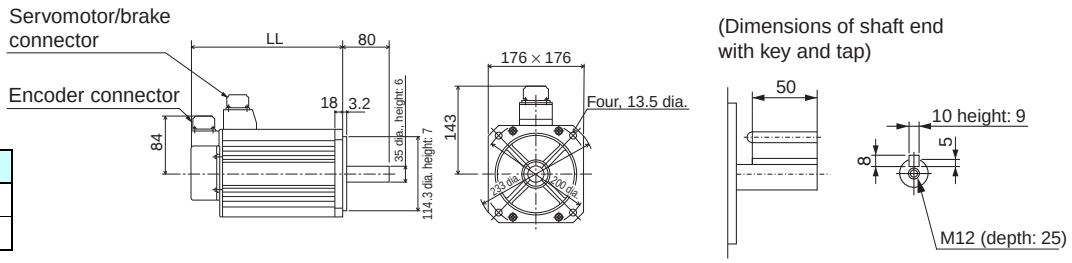

Model	LL
R88M-G3K010T	222
R88M-G3K010T-B	271

Note: The standard models have a straight shaft.
A model with a key and tap is indicated by adding “S2” to the end of the model number.

• **4.5 kW**

ABS

R88M-G4K510T (-S2)
R88M-G4K510T-B (S2)

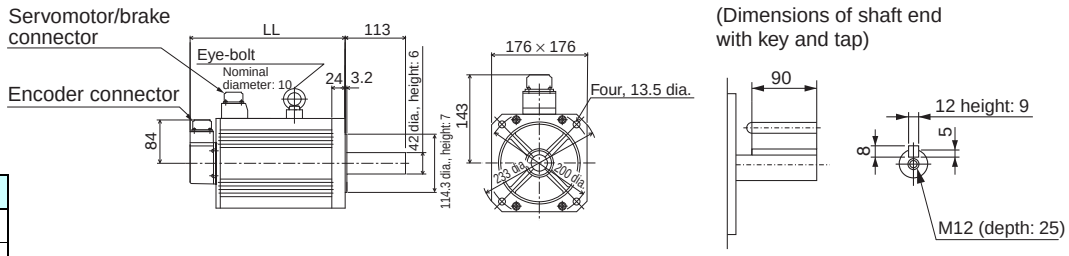

Model	LL
R88M-G4K510T	300.5
R88M-G4K510T-B	337.5

Note: The standard models have a straight shaft.
A model with a key and tap is indicated by adding “S2” to the end of the model number.

• **6 kW**

ABS

R88M-G6K010T (-S2)
R88M-G6K010T-B (S2)

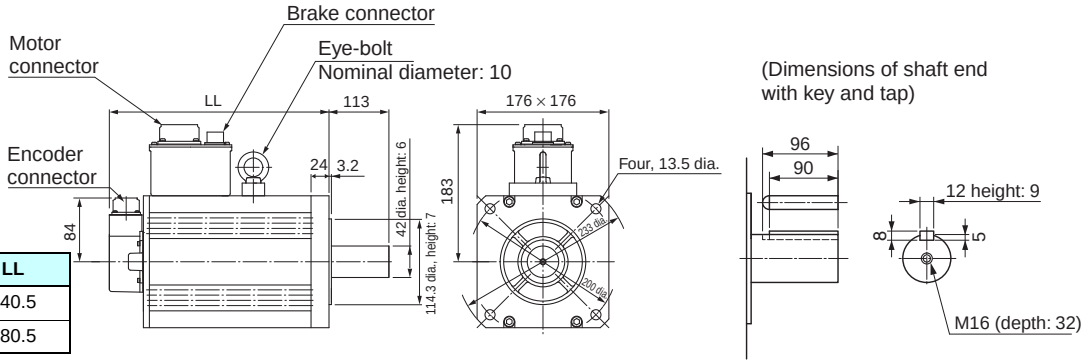

Model	LL
R88M-G6K010T	340.5
R88M-G6K010T-B	380.5

Note: The standard models have a straight shaft.
A model with a key and tap is indicated by adding “S2” to the end of the model number.

● Decelerators

Backlash: 3 Arcminutes Max.

<Cylinder Type>

● 3,000-r/min Servomotors (50 to 750 W)

Model			Outline Drawings	Dimensions (mm)											
				LM	LR	C1	C2	D1	D2	D3	D4	D5	E	F1	F2
50W	1/5	R88G-HPG11B05100B□	1 *4	39.5	42	40	40 × 40	46	46	40	39.5	29	27	2.2	15
	1/9	R88G-HPG11B09050B□	1 *4	39.5	42	40	40 × 40	46	46	40	39.5	29	27	2.2	15
	1/21	R88G-HPG14A21100B□	1	64.0	58	60	60 × 60	70	46	56	55.5	40	37	2.5	21
	1/33	R88G-HPG14A33050B□	1	64.0	58	60	60 × 60	70	46	56	55.5	40	37	2.5	21
	1/45	R88G-HPG14A45050B□	1	64.0	58	60	60 × 60	70	46	56	55.5	40	37	2.5	21
100W	1/5	R88G-HPG11B05100B□	1 *4	39.5	42	40	40 × 40	46	46	40	39.5	29	27	2.2	15
	1/11	R88G-HPG14A11100B□	1	64.0	58	60	60 × 60	70	46	56	55.5	40	37	2.5	21
	1/21	R88G-HPG14A21100B□	1	64.0	58	60	60 × 60	70	46	56	55.5	40	37	2.5	21
	1/33	R88G-HPG20A33100B□	2	66.5	80	90	55 dia.	105	46	85	84	59	53	7.5	27
	1/45	R88G-HPG20A45100B□	2	66.5	80	90	55 dia.	105	46	85	84	59	53	7.5	27
200W	1/5	R88G-HPG14A05200B□	1	64.0	58	60	60 × 60	70	70	56	55.5	40	37	2.5	21
	1/11	R88G-HPG14A11200B□	1	64.0	58	60	60 × 60	70	70	56	55.5	40	37	2.5	21
	1/21	R88G-HPG20A21200B□	1	71.0	80	90	90 × 90	105	70	85	84	59	53	7.5	27
	1/33	R88G-HPG20A33200B□	2	71.0	80	90	89 dia.	105	70	85	84	59	53	7.5	27
	1/45	R88G-HPG20A45200B□	2	71.0	80	90	89 dia.	105	70	85	84	59	53	7.5	27
400W	1/5	R88G-HPG14A05400B□	1	64	58	60	60 × 60	70	70	56	55.5	40	37	2.5	21
	1/11	R88G-HPG20A11400B□	2	71	80	90	89 dia.	105	70	85	84	59	53	7.5	27
	1/21	R88G-HPG20A21400B□	2	71	80	90	89 dia.	105	70	85	84	59	53	7.5	27
	1/33	R88G-HPG32A33400B□	2	104	133	120	122 dia.	135	70	115	114	84	98	12.5	35
	1/45	R88G-HPG32A45400B□	2	104	133	120	122 dia.	135	70	115	114	84	98	12.5	35
750W (200V)	1/5	R88G-HPG20A05750B□	1	78	80	90	80 × 80	105	90	85	84	59	53	7.5	27
	1/11	R88G-HPG20A11750B□	1	78	80	90	80 × 80	105	90	85	84	59	53	7.5	27
	1/21	R88G-HPG32A21750B□	2	104	133	120	122 dia.	135	90	115	114	84	98	12.5	35
	1/33	R88G-HPG32A33750B□	2	104	133	120	122 dia.	135	90	115	114	84	98	12.5	35
	1/45	R88G-HPG32A45750B□	2	104	133	120	122 dia.	135	90	115	114	84	98	12.5	35

Note: 1. The standard models have a straight shaft.
Note: 2. To order a Decelerator with a straight shaft with key and tap, add "J" to the end of the model number, in the place indicated by the box. (e.g., R88G-HPG11B05100BJ)
Note: 3. The diameter of the motor shaft insertion portion is the same as the diameter of the shaft of the corresponding motor.
Note: 4. Applicable for the servomotors with key, if the key is removed.
Note: 5. The dimensional drawings in this document are designed to indicate only the main dimensions. They do not necessarily represent the detailed shapes of the products.

Outline Drawings 1

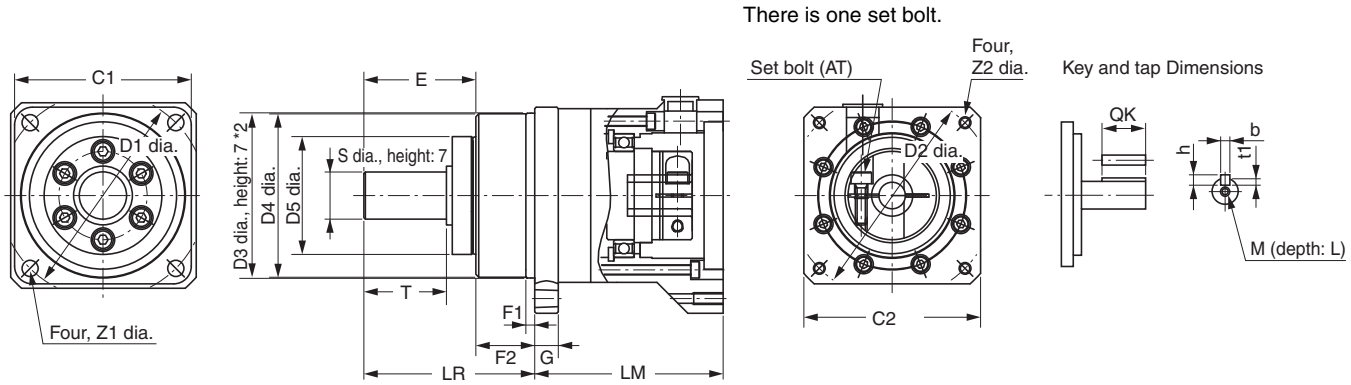

*2. The tolerance for the R88G-HPG50□ and R88G-HPG65□ is h8.

*4. For the R88G-HPG11B series, two set bolts are positioned at an angle of 90° from each other.

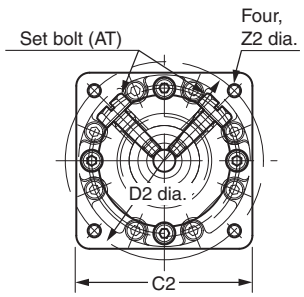

Dimensions (mm)												Model		
G	S	T	Z1	Z2	AT*1	Key Dimensions				Tap Dimensions				
						QK	b	h	t1	M	L			
5	8	20	3.4	M4 × 9	M3	15	3	3	1.8	M3	6	**R88G-HPG11B05100B□**	1/5	50W
5	8	20	3.4	M4 × 9	M3	15	3	3	1.8	M3	6	**R88G-HPG11B09050B□**	1/9	
8	16	28	5.5	M4 × 10	M3	25	5	5	3	M4	8	**R88G-HPG14A21100B□**	1/21	
8	16	28	5.5	M4 × 10	M3	25	5	5	3	M4	8	**R88G-HPG14A33050B□**	1/33	
8	16	28	5.5	M4 × 10	M3	25	5	5	3	M4	8	**R88G-HPG14A45050B□**	1/45	
5	8	20	3.4	M4 × 9	M3	15	3	3	1.8	M3	6	**R88G-HPG11B05100B□**	1/5	100W
8	16	28	5.5	M4 × 10	M3	25	5	5	3	M4	8	**R88G-HPG14A11100B□**	1/11	
8	16	28	5.5	M4 × 10	M3	25	5	5	3	M4	8	**R88G-HPG14A21100B□**	1/21	
10	25	42	9	M4 × 10	M4	36	8	7	4	M6	12	**R88G-HPG20A33100B□**	1/33	
10	25	42	9	M4 × 10	M4	36	8	7	4	M6	12	**R88G-HPG20A45100B□**	1/45	
8	16	28	5.5	M4 × 10	M4	25	5	5	3	M4	8	**R88G-HPG14A05200B□**	1/5	200W
8	16	28	5.5	M4 × 10	M4	25	5	5	3	M4	8	**R88G-HPG14A11200B□**	1/11	
10	25	42	9	M4 × 10	M4	36	8	7	4	M6	12	**R88G-HPG20A21200B□**	1/21	
10	25	42	9	M4 × 10	M4	36	8	7	4	M6	12	**R88G-HPG20A33200B□**	1/33	
10	25	42	9	M4 × 10	M4	36	8	7	4	M6	12	**R88G-HPG20A45200B□**	1/45	
8	16	28	5.5	M4 × 10	M4	25	5	5	3	M4	8	**R88G-HPG14A05400B□**	1/5	400W
10	25	42	9	M4 × 10	M4	36	8	7	4	M6	12	**R88G-HPG20A11400B□**	1/11	
10	25	42	9	M4 × 10	M4	36	8	7	4	M6	12	**R88G-HPG20A21400B□**	1/21	
13	40	82	11	M4 × 10	M4	70	12	8	5	M10	20	**R88G-HPG32A33400B□**	1/33	
13	40	82	11	M4 × 10	M4	70	12	8	5	M10	20	**R88G-HPG32A45400B□**	1/45	
10	25	42	9	M5 × 12	M4	36	8	7	4	M6	12	**R88G-HPG20A05750B□**	1/5	750W (200V)
10	25	42	9	M5 × 12	M4	36	8	7	4	M6	12	**R88G-HPG20A11750B□**	1/11	
13	40	82	11	M5 × 12	M6	70	12	8	5	M10	20	**R88G-HPG32A21750B□**	1/21	
13	40	82	11	M5 × 12	M6	70	12	8	5	M10	20	**R88G-HPG32A33750B□**	1/33	
13	40	82	11	M5 × 12	M6	70	12	8	5	M10	20	**R88G-HPG32A45750B□**	1/45	

*1. This is the set bolt.

Outline Drawings 2

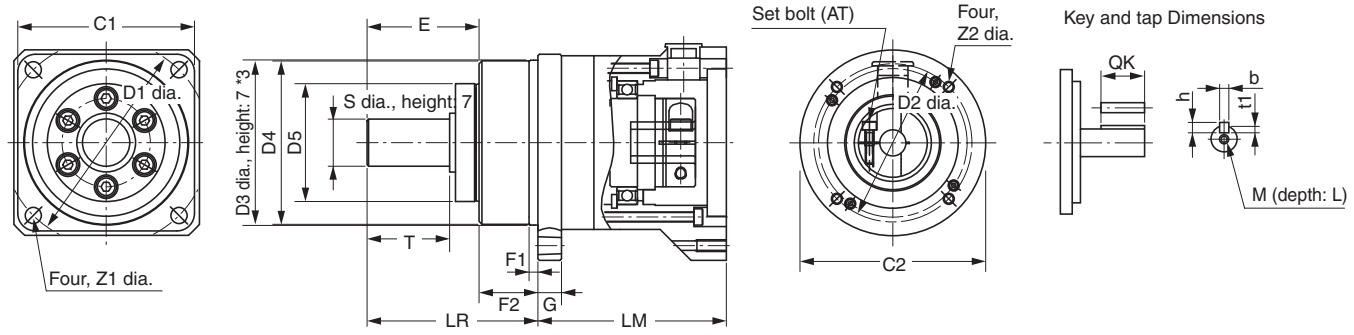

*3. The tolerance for the R88G-HPG50□ and R88G-HPG65□ is h8.

Backlash: 3 Arcminutes Max.

<Cylinder Type>

● 3,000-r/min Servomotors (1 to 5 kW)

Model			Outline Drawings	Dimensions (mm)											
				LM	LR	C1	C2	D1	D2	D3	D4	D5	E	F1	F2
1kW	1/5	R88G-HPG32A052K0B□	2	110	133	120	135 dia.	135	115	115	114	84	98	12.5	35
	1/11	R88G-HPG32A112K0B□	2	110	133	120	135 dia.	135	115	115	114	84	98	12.5	35
	1/21	R88G-HPG32A211K5B□	2	110	133	120	135 dia.	135	115	115	114	84	98	12.5	35
	1/33	R88G-HPG50A332K0B□	2	123	156	170	170 dia.	190	115	165	163	122	103	12	53
	1/45	R88G-HPG50A451K5B□	2	123	156	170	170 dia.	190	115	165	163	122	103	12	53
1.5kW	1/5	R88G-HPG32A052K0B□	2	110	133	120	135 dia.	135	115	115	114	84	98	12.5	35
	1/11	R88G-HPG32A112K0B□	2	110	133	120	135 dia.	135	115	115	114	84	98	12.5	35
	1/21	R88G-HPG32A211K5B□	2	110	133	120	135 dia.	135	115	115	114	84	98	12.5	35
	1/33	R88G-HPG50A332K0B□	2	123	156	170	170 dia.	190	115	165	163	122	103	12	53
	1/45	R88G-HPG50A451K5B□	2	123	156	170	170 dia.	190	115	165	163	122	103	12	53
2kW	1/5	R88G-HPG32A052K0B□	2	110	133	120	135 dia.	135	115	115	114	84	98	12.5	35
	1/11	R88G-HPG32A112K0B□	2	110	133	120	135 dia.	135	115	115	114	84	98	12.5	35
	1/21	R88G-HPG50A212K0B□	2	123	156	170	170 dia.	190	115	165	163	122	103	12	53
	1/33	R88G-HPG50A332K0B□	2	123	156	170	170 dia.	190	115	165	163	122	103	12	53
3kW	1/5	R88G-HPG32A053K0B□	1	107	133	120	130 × 130	135	145	115	114	84	98	12.5	35
	1/11	R88G-HPG50A113K0B□	2	123	156	170	170 dia.	190	145	165	163	122	103	12	53
	1/21	R88G-HPG50A213K0B□	2	123	156	170	170 dia.	190	145	165	163	122	103	12	53
4kW	1/5	R88G-HPG32A054K0B□	1	129	133	120	130 × 130	135	145	115	114	84	98	12.5	35
	1/11	R88G-HPG50A115K0B□	1	149	156	170	130 × 130	190	145	165	163	122	103	12	53
5kW	1/5	R88G-HPG50A055K0B□	1	149	156	170	130 × 130	190	145	165	163	122	103	12	53
	1/11	R88G-HPG50A115K0B□	1	149	156	170	130 × 130	190	145	165	163	122	103	12	53

Note: 1. The standard models have a straight shaft.
Note: 2. To order a Decelerator with a straight shaft with key and tap, add "J" to the end of the model number, in the place indicated by the box. (e.g., R88G-HPG32A051K0BJ)
Note: 3. The diameter of the motor shaft insertion portion is the same as the diameter of the shaft of the corresponding motor.
Note: 4. Applicable for the servomotors with key, if the key is removed.
Note: 5. The dimensional drawings in this document are designed to indicate only the main dimensions. They do not necessarily represent the detailed shapes of the products.

Outline Drawings 1

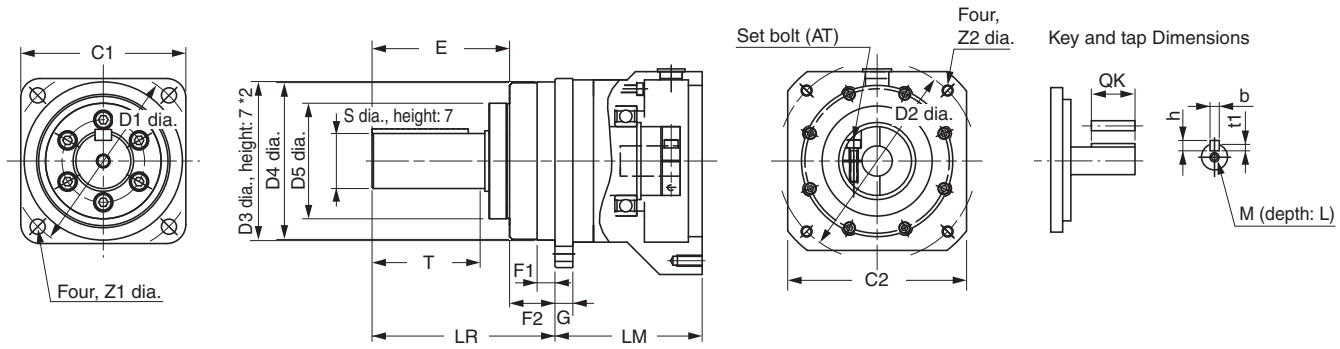

*2. The tolerance for the R88G-HPG50□ and R88G-HPG65□ is h8.

Dimensions (mm)											Model		
G	S	T	Z1	Z2	AT*1	Key Dimensions				Tap Dimensions				
						QK	b	h	t1	M	L			
13	40	82	11	M8 × 10	M6	70	12	8	5	M10	20	R88G-HPG32A052K0B□	1/5	
13	40	82	11	M8 × 10	M6	70	12	8	5	M10	20	R88G-HPG32A112K0B□	1/11	
13	40	82	11	M8 × 10	M6	70	12	8	5	M10	20	R88G-HPG32A211K5B□	1/21	1kW
16	50	82	14	M8 × 10	M6	70	14	9	5.5	M10	20	R88G-HPG50A332K0B□	1/33	
16	50	82	14	M8 × 10	M6	70	14	9	5.5	M10	20	R88G-HPG50A451K5B□	1/45	
13	40	82	11	M8 × 10	M6	70	12	8	5	M10	20	R88G-HPG32A052K0B□	1/5	
13	40	82	11	M8 × 10	M6	70	12	8	5	M10	20	R88G-HPG32A112K0B□	1/11	
13	40	82	11	M8 × 10	M6	70	12	8	5	M10	20	R88G-HPG32A211K5B□	1/21	1.5kW
16	50	82	14	M8 × 10	M6	70	14	9	5.5	M10	20	R88G-HPG50A332K0B□	1/33	
16	50	82	14	M8 × 10	M6	70	14	9	5.5	M10	20	R88G-HPG50A451K5B□	1/45	
13	40	82	11	M8 × 10	M6	70	12	8	5	M10	20	R88G-HPG32A052K0B□	1/5	
13	40	82	11	M8 × 10	M6	70	12	8	5	M10	20	R88G-HPG32A112K0B□	1/11	2kW
16	50	82	14	M8 × 10	M6	70	14	9	5.5	M10	20	R88G-HPG50A212K0B□	1/21	
16	50	82	14	M8 × 10	M6	70	14	9	5.5	M10	20	R88G-HPG50A332K0B□	1/33	
13	40	82	11	M8 × 18	M6	70	12	8	5	M10	20	R88G-HPG32A053K0B□	1/5	
16	50	82	14	M8 × 16	M6	70	14	9	5.5	M10	20	R88G-HPG50A113K0B□	1/11	3kW
16	50	82	14	M8 × 16	M6	70	14	9	5.5	M10	20	R88G-HPG50A213K0B□	1/21	
13	40	82	11	M8 × 25	M6	70	12	8	5	M10	20	R88G-HPG32A054K0B□	1/5	4kW
16	50	82	14	M8 × 25	M6	70	14	9	5.5	M10	20	R88G-HPG50A115K0B□	1/11	
16	50	82	14	M8 × 25	M6	70	14	9	5.5	M10	20	R88G-HPG50A055K0B□	1/5	5kW
16	50	82	14	M8 × 25	M6	70	14	9	5.5	M10	20	R88G-HPG50A115K0B□	1/11	

*1. This is the set bolt.

Outline Drawings 2

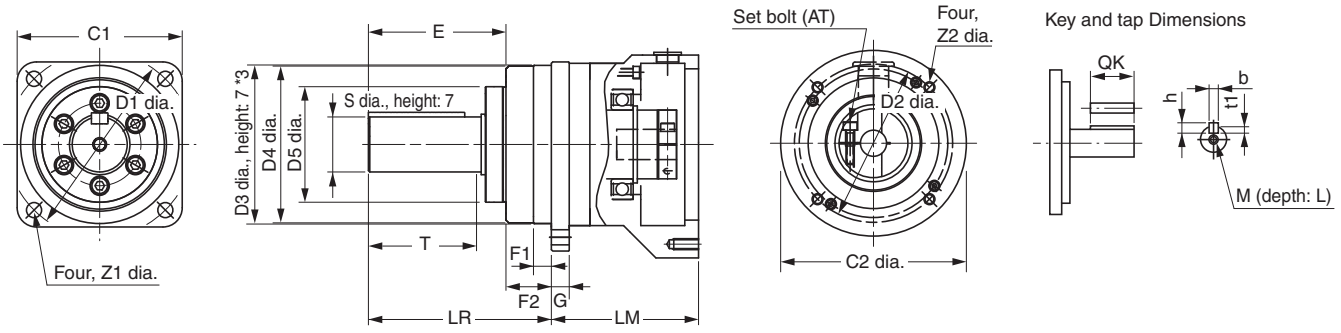

*3. The tolerance for the R88G-HPG50□ and R88G-HPG65□ is h8.

Backlash: 3 Arcminutes Max.

<Flat Servomotors>

● 3,000-r/min Servomotors (100 to 400 W)

Model			Dimensions (mm)												
			LM	LR	C1	C2	D1	D2	D3	D4	D5	E	F1	F2	
100 W	1/5	R88G-HPG11A05100PB	39.5	42	40	60×60	46	70	40.0	39.5	29	27	2.2	15	
	1/11	R88G-HPG14A11100PB	64.0	58	60	60×60	70	70	56.0	55.5	40	37	2.5	21	
	1/21	R88G-HPG14A21100PB	64.0	58	60	60×60	70	70	56.0	55.5	40	37	2.5	21	
	1/33	R88G-HPG20A33100PB	71.0	80	90	89 dia.	105	70	85.0	84.0	59	53	7.5	27	
	1/45	R88G-HPG20A45100PB	71.0	80	90	89 dia.	105	70	85.0	84.0	59	53	7.5	27	
200 W	1/5	R88G-HPG14A05200PB	65.0	58	60	80×80	70	90	56.0	55.5	40	37	2.5	21	
	1/11	R88G-HPG20A11200PB	78.0	80	90	80×80	105	90	85.0	84.0	59	53	7.5	27	
	1/21	R88G-HPG20A21200PB	78.0	80	90	80×80	105	90	85.0	84.0	59	53	7.5	27	
	1/33	R88G-HPG20A33200PB	78.0	80	90	80×80	105	90	85.0	84.0	59	53	7.5	27	
	1/45	R88G-HPG20A45200PB	78.0	80	90	80×80	105	90	85.0	84.0	59	53	7.5	27	
400 W	1/5	R88G-HPG20A05400PB	78.0	80	90	80×80	105	90	85.0	84.0	59	53	7.5	27	
	1/11	R88G-HPG20A11400PB	78.0	80	90	80×80	105	90	85.0	84.0	59	53	7.5	27	
	1/21	R88G-HPG20A21400PB	78.0	80	90	80×80	105	90	85.0	84.0	59	53	7.5	27	
	1/33	R88G-HPG32A33400PB	104.0	133	120	122 dia.	135	90	115.0	114.0	84	98	12.5	35	
	1/45	R88G-HPG32A45400PB	104.0	133	120	122 dia.	135	90	115.0	114.0	84	98	12.5	35	

Note: 1. The standard models have a straight shaft.
A model with a key and tap is indicated by adding "J" to the end of the model number.
Note: 2. Applicable for the servomotors with key, if the key is removed.

Outline Drawings

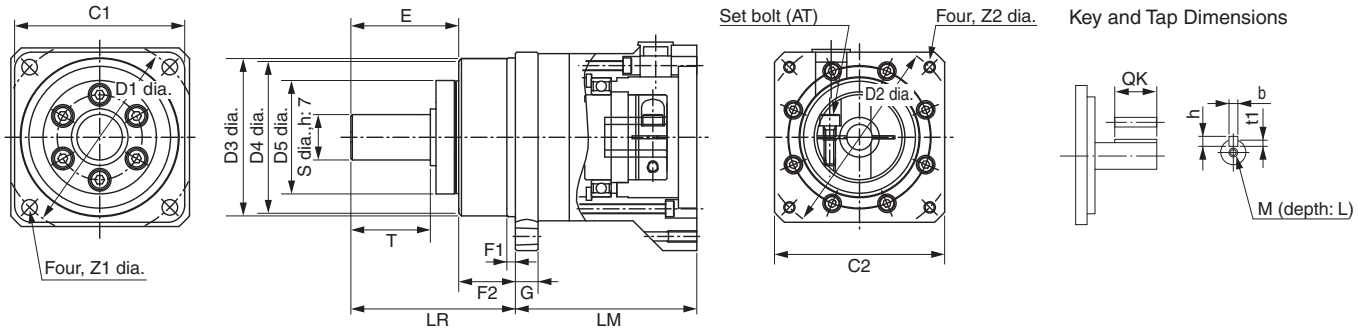

	Dimensions (mm)											Model		
	G	S	T	Z1	Z2	AT*1	Key dimensions				Tap dimensions				
							QK	b	h	t1	M	L			
	5	8	20	3.4	M4×9	M3	15	3	3	1.8	M3	6	R88G-HPG11A05100PB	1/5	
	8	16	28	5.5	M4×10	M3	25	5	5	3.0	M4	8	R88G-HPG14A11100PB	1/11	
	8	16	28	5.5	M4×10	M3	25	5	5	3.0	M4	8	R88G-HPG14A21100PB	1/21	100 W
	10	25	42	9.0	M4×10	M3	36	8	7	4.0	M6	12	R88G-HPG20A33100PB	1/33	
	10	25	42	9.0	M4×10	M3	36	8	7	4.0	M6	12	R88G-HPG20A45100PB	1/45	
	8	16	28	5.5	M5×12	M4	25	5	5	3.0	M4	8	R88G-HPG14A05200PB	1/5	
	10	25	42	9.0	M5×12	M4	36	8	7	4.0	M6	12	R88G-HPG20A11200PB	1/11	
	10	25	42	9.0	M5×12	M4	36	8	7	4.0	M6	12	R88G-HPG20A21200PB	1/21	200 W
	10	25	42	9.0	M5×12	M4	36	8	7	4.0	M6	12	R88G-HPG20A33200PB	1/33	
	10	25	42	9.0	M5×12	M4	36	8	7	4.0	M6	12	R88G-HPG20A45200PB	1/45	
	10	25	42	9.0	M5×12	M4	36	8	7	4.0	M6	12	R88G-HPG20A05400PB	1/5	
	10	25	42	9.0	M5×12	M4	36	8	7	4.0	M6	12	R88G-HPG20A11400PB	1/11	
	10	25	42	9.0	M5×12	M4	36	8	7	4.0	M6	12	R88G-HPG20A21400PB	1/21	400 W
	13	40	82	11.0	M5×12	M6	70	12	8	5.0	M10	20	R88G-HPG32A33400PB	1/33	
	13	40	82	11.0	M5×12	M6	70	12	8	5.0	M10	20	R88G-HPG32A45400PB	1/45	

*1. This is the set bolt.

Backlash: 3 Arcminutes Max.

<Cylinder Type>

● 2,000-r/min Servomotors (1 to 7.5 kW)

Model			Outline Drawings	Dimensions (mm)											
				LM	LR	C1	C2	D1	D2	D3	D4	D5	E	F1	F2
1kW	1/5	R88G-HPG32A053K0B□	1	107	133	120	130 × 130	135	145	115	114	84	98	12.5	35
	1/11	R88G-HPG32A112K0SB□	1	107	133	120	130 × 130	135	145	115	114	84	98	12.5	35
	1/21	R88G-HPG32A211K0SB□	1	107	133	120	130 × 130	135	145	115	114	84	98	12.5	35
	1/33	R88G-HPG50A332K0SB□	2	123	156	170	170 dia.	190	145	165	163	122	103	12	53
	1/45	R88G-HPG50A451K0SB□	2	123	156	170	170 dia.	190	145	165	163	122	103	12	53
1.5kW	1/5	R88G-HPG32A053K0B□	1	107	133	120	130 × 130	135	145	115	114	84	98	12.5	35
	1/11	R88G-HPG32A112K0SB□	1	107	133	120	130 × 130	135	145	115	114	84	98	12.5	35
	1/21	R88G-HPG50A213K0B□	2	123	156	170	170 dia.	190	145	165	163	122	103	12	53
	1/33	R88G-HPG50A332K0SB□	2	123	156	170	170 dia.	190	145	165	163	122	103	12	53
2kW	1/5	R88G-HPG32A053K0B□	1	107	133	120	130 × 130	135	145	115	114	84	98	12.5	35
	1/11	R88G-HPG32A112K0SB□	1	107	133	120	130 × 130	135	145	115	114	84	98	12.5	35
	1/21	R88G-HPG50A213K0B□	2	123	156	170	170 dia.	190	145	165	163	122	103	12	53
	1/33	R88G-HPG50A332K0SB□	2	123	156	170	170 dia.	190	145	165	163	122	103	12	53
3kW	1/5	R88G-HPG32A054K0B□	1	129	133	120	130 × 130	135	145	115	114	84	98	12.5	35
	1/11	R88G-HPG50A115K0B□	1	149	156	170	130 × 130	190	145	165	163	122	103	12	53
	1/21	R88G-HPG50A213K0SB□	1	149	156	170	130 × 130	190	145	165	163	122	103	12	53
	1/25	R88G-HPG65A253K0SB□	1	231	222	230	130 × 130	260	145	220	214	168	165	12	57
4kW	1/5	R88G-HPG50A055K0SB□	1	149	156	170	180 × 180	190	200	165	163	122	103	12	53
	1/11	R88G-HPG50A115K0SB□	1	149	156	170	180 × 180	190	200	165	163	122	103	12	53
	1/20	R88G-HPG65A205K0SB□	1	231	222	230	180 × 180	260	200	220	214	168	165	12	57
	1/25	R88G-HPG65A255K0SB□	1	231	222	230	180 × 180	260	200	220	214	168	165	12	57
5kW	1/5	R88G-HPG50A055K0SB□	1	149	156	170	180 × 180	190	200	165	163	122	103	12	53
	1/11	R88G-HPG50A115K0SB□	1	149	156	170	180 × 180	190	200	165	163	122	103	12	53
	1/20	R88G-HPG65A205K0SB□	1	231	222	230	180 × 180	260	200	220	214	168	165	12	57
	1/25	R88G-HPG65A255K0SB□	1	231	222	230	180 × 180	260	200	220	214	168	165	12	57
7.5kW	1/5	R88G-HPG65A057K5SB□	1	184.5	222	230	180 × 180	260	200	220	214	168	165	12.0	57
	1/12	R88G-HPG65A127K5SB□	1	254.5	222	230	180 × 180	260	200	220	214	168	165	12.0	57

Note: 1. The standard models have a straight shaft.
Note: 2. To order a Decelerator with a straight shaft with key and tap, add "J" to the end of the model number, in the place indicated by the box. (e.g., R88G-HPG32A053K0BJ)
Note: 3. The diameter of the motor shaft insertion portion is the same as the diameter of the shaft of the corresponding motor.
Note: 4. Applicable for the servomotors with key, if the key is removed.
Note: 5. The dimensional drawings in this document are designed to indicate only the main dimensions. They do not necessarily represent the detailed shapes of the products.

Outline Drawings 1

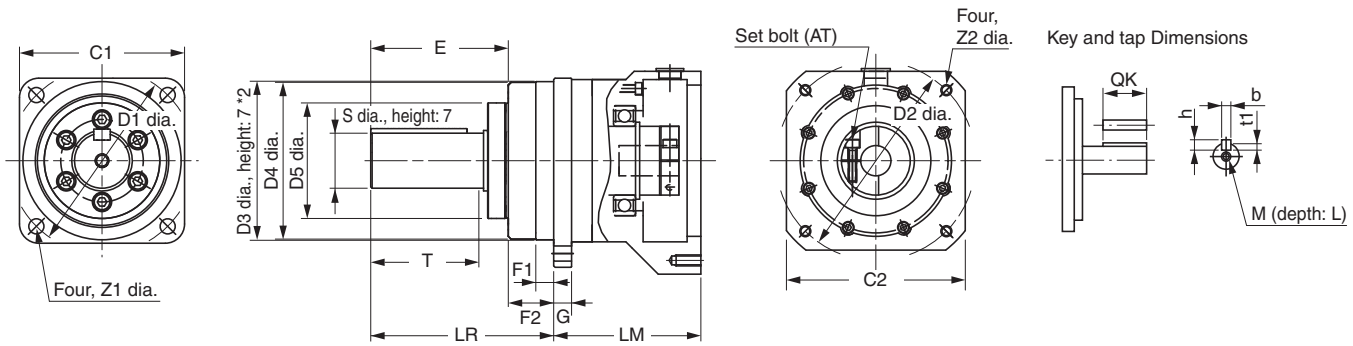

*2. The tolerance for the R88G-HPG50□ and R88G-HPG65□ is h8.

Dimensions (mm)											Model		
G	S	T	Z1	Z2	AT*1	Key Dimensions				Tap Dimensions				
						QK	b	h	t1	M	L			
13	40	82	11	M8 × 18	M6	70	12	8	5	M10	20	R88G-HPG32A053K0B□	1/5	1kW
13	40	82	11	M8 × 18	M6	70	12	8	5	M10	20	R88G-HPG32A112K0SB□	1/11	
13	40	82	11	M8 × 18	M6	70	12	8	5	M10	20	R88G-HPG32A211K0SB□	1/21	
16	50	82	14	M8 × 16	M6	70	14	9	5.5	M10	20	R88G-HPG50A332K0SB□	1/33	
16	50	82	14	M8 × 16	M6	70	14	9	5.5	M10	20	R88G-HPG50A451K0SB□	1/45	
13	40	82	11	M8 × 18	M6	70	12	8	5	M10	20	R88G-HPG32A053K0B□	1/5	1.5kW
13	40	82	11	M8 × 18	M6	70	12	8	5	M10	20	R88G-HPG32A112K0SB□	1/11	
16	50	82	14	M8 × 16	M6	70	14	9	5.5	M10	20	R88G-HPG50A213K0B□	1/21	
16	50	82	14	M8Å~16	M6	70	14	9	5.5	M10	20	R88G-HPG50A332K0SB□	1/33	
13	40	82	11	M8 × 18	M6	70	12	8	5	M10	20	R88G-HPG32A053K0B□	1/5	2kW
13	40	82	11	M8 × 18	M6	70	12	8	5	M10	20	R88G-HPG32A112K0SB□	1/11	
16	50	82	14	M8 × 16	M6	70	14	9	5.5	M10	20	R88G-HPG50A213K0B□	1/21	
16	50	82	14	M8 × 16	M6	70	14	9	5.5	M10	20	R88G-HPG50A332K0SB□	1/33	
13	40	82	11	M8 × 25	M6	70	12	8	5	M10	20	R88G-HPG32A054K0B□	1/5	3kW
16	50	82	14	M8 × 25	M6	70	14	9	5.5	M10	20	R88G-HPG50A115K0B□	1/11	
16	50	82	14	M8 × 25	M6	70	14	9	5.5	M10	20	R88G-HPG50A213K0SB□	1/21	
25	80	130	18	M8 × 25	M8	110	22	14	9	M16	35	R88G-HPG65A253K0SB□	1/25	
16	50	82	14	M12 × 25	M6	70	14	9	5.5	M10	20	R88G-HPG50A055K0SB□	1/5	4kW
16	50	82	14	M12 × 25	M6	70	14	9	5.5	M10	20	R88G-HPG50A115K0SB□	1/11	
25	80	130	18	M12 × 25	M8	110	22	14	9	M16	35	R88G-HPG65A205K0SB□	1/20	
25	80	130	18	M12 × 25	M8	110	22	14	9	M16	35	R88G-HPG65A255K0SB□	1/25	
16	50	82	14	M12 × 25	M6	70	14	9	5.5	M10	20	R88G-HPG50A055K0SB□	1/5	5kW
16	50	82	14	M12 × 25	M6	70	14	9	5.5	M10	20	R88G-HPG50A115K0SB□	1/11	
25	80	130	18	M12 × 25	M8	110	22	14	9	M16	35	R88G-HPG65A205K0SB□	1/20	
25	80	130	18	M12 × 25	M8	110	22	14	9	M16	35	R88G-HPG65A255K0SB□	1/25	
25	80	130	18	M12 × 25	M8	110	22	14	9.0	M16	35	R88G-HPG65A057K5SB□	1/5	7.5kW
25	80	130	18	M12 × 25	M8	110	22	14	9.0	M16	35	R88G-HPG65A127K5SB□	1/12	

*1. This is the set bolt.

Outline Drawings 2

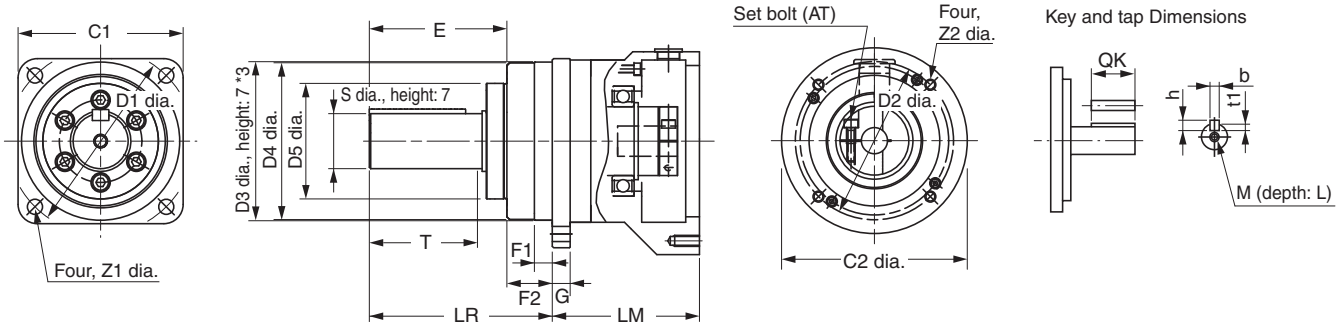

*3. The tolerance for the R88G-HPG50□ and R88G-HPG65□ is h8.

Backlash: 3 Arcminutes Max.

<Cylinder Type>

● 1,000-r/min Servomotors (900 W to 6 kW)

Model			Outline Drawings	Dimensions (mm)											
				LM	LR	C1	C2	D1	D2	D3	D4	D5	E	F1	F2
900W	1/5	R88G-HPG32A05900TB□	1	129	133	120	130 × 130	135	145	115	114	84	98	12.5	35
	1/11	R88G-HPG32A11900TB□	1	129	133	120	130 × 130	135	145	115	114	84	98	12.5	35
	1/21	R88G-HPG50A21900TB□	1	149	156	170	130 × 130	190	145	165	163	122	103	12	53
	1/33	R88G-HPG50A33900TB□	1	149	156	170	130 × 130	190	145	165	163	122	103	12	53
2kW	1/5	R88G-HPG32A052K0TB□	1	129	133	120	180 × 180	135	200	115	114	84	98	12.5	35
	1/11	R88G-HPG50A112K0TB□	1	149	156	170	180 × 180	190	200	165	163	122	103	12	53
	1/21	R88G-HPG50A212K0TB□	1	231	222	230	180 × 180	260	200	220	214	168	165	12	53
	1/25	R88G-HPG65A255K0SB□	1	231	222	230	180 × 180	260	200	220	214	168	165	12	57
3kW	1/5	R88G-HPG50A055K0SB□	1	149	156	170	180 × 180	190	200	165	163	122	103	12	53
	1/11	R88G-HPG50A115K0SB□	1	149	156	170	180 × 180	190	200	165	163	122	103	12	53
	1/20	R88G-HPG65A205K0SB□	1	231	222	230	180 × 180	260	200	220	214	168	165	12	57
	1/25	R88G-HPG65A255K0SB□	1	231	222	230	180 × 180	260	200	220	214	168	165	12	57
4.5kW	1/5	R88G-HPG50A054K5TB□	1	149	156	170	180 × 180	190	200	165	163	122	103	12.0	53
	1/12	R88G-HPG65A127K5SB□	1	254.5	222	230	180 × 180	260	200	220	214	168	165	12.0	57
	1/20	R88G-HPG65A204K5TB□	1	254.5	222	230	180 × 180	260	200	220	214	168	165	12.0	57
6kW	1/5	R88G-HPG65A057K5SB□	1	184.5	222	230	180 × 180	260	200	220	214	168	165	12.0	57
	1/12	R88G-HPG65A127K5SB□	1	254.5	222	230	180 × 180	260	200	220	214	168	165	12.0	57

Note: 1. The standard models have a straight shaft.
Note: 2. To order a Decelerator with a straight shaft with key and tap, add "J" to the end of the model number, in the place indicated by the box.
(e.g., R88G-HPG32A05900TBJ)
Note: 3. The diameter of the motor shaft insertion portion is the same as the diameter of the shaft of the corresponding motor.
Note: 4. Applicable for the servomotors with key, if the key is removed.
Note: 5. The dimensional drawings in this document are designed to indicate only the main dimensions. They do not necessarily represent the detailed shapes of the products.

Outline Drawings 1

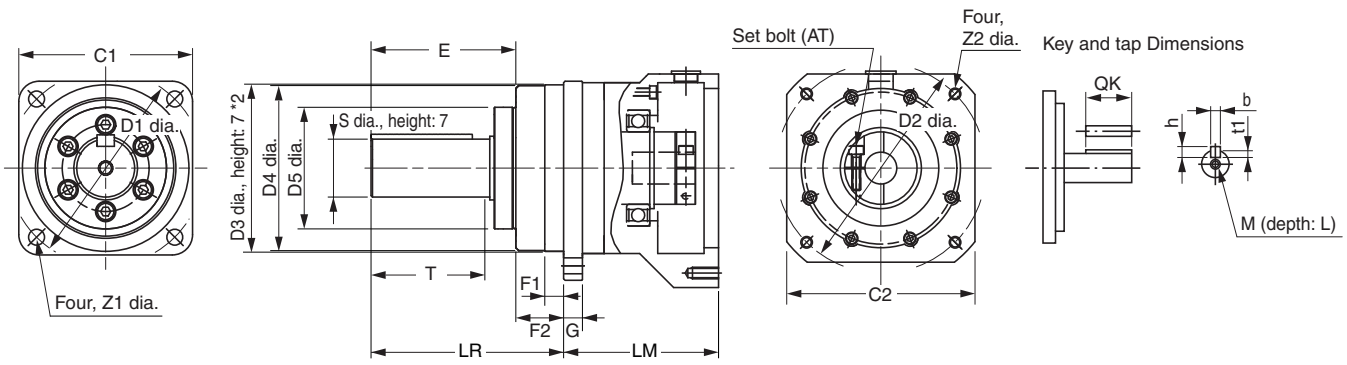

*2. The tolerance for the R88G-HPG50□ and R88G-HPG65□ is h8.

Dimensions (mm)											Model		
G	S	T	Z1	Z2	AT*1	Key Dimensions				Tap Dimensions				
						QK	b	h	t1	M	L			
13	40	82	11	M8 × 25	M6	70	12	8	5	M10	20	R88G-HPG32A05900TB□	1/5	900W
13	40	82	11	M8 × 25	M6	70	12	8	5	M10	20	R88G-HPG32A11900TB□	1/11	
16	50	82	14	M8 × 25	M6	70	14	9	5.5	M10	20	R88G-HPG50A21900TB□	1/21	
16	50	82	14	M8 × 25	M6	70	14	9	5.5	M10	20	R88G-HPG50A33900TB□	1/33	
13	40	82	11	M12 × 25	M6	70	12	8	5	M10	20	R88G-HPG32A052K0TB□	1/5	2kW
16	50	82	14	M12 × 25	M6	70	14	9	5.5	M10	20	R88G-HPG50A112K0TB□	1/11	
25	80	130	18	M12 × 25	M8	110	22	14	9	M16	35	R88G-HPG50A212K0TB□	1/21	
25	80	130	18	M12 × 25	M8	110	22	14	9	M16	35	R88G-HPG65A255K0SB□	1/25	
16	50	82	14	M12 × 25	M6	70	14	9	5.5	M10	20	R88G-HPG50A055K0SB□	1/5	3kW
16	50	82	14	M12 × 25	M6	70	14	9	5.5	M10	20	R88G-HPG50A115K0SB□	1/11	
25	80	130	18	M12 × 25	M8	110	22	14	9	M16	35	R88G-HPG65A205K0SB□	1/20	
25	80	130	18	M12 × 25	M8	110	22	14	9	M16	35	R88G-HPG65A255K0SB□	1/25	
16	50	82	14	M12 × 25	M6	70	14	9	5.5	M10	20	R88G-HPG50A054K5TB□	1/5	4.5kW
25	80	130	18	M12 × 25	M8	110	22	14	9	M16	35	R88G-HPG65A127K5SB□	1/12	
25	80	130	18	M12 × 25	M8	110	22	14	9	M16	35	R88G-HPG65A204K5TB□	1/20	
25	80	130	18	M12 × 25	M8	110	22	14	9	M16	35	R88G-HPG65A057K5SB□	1/5	6kW
25	80	130	18	M12 × 25	M8	110	22	14	9	M16	35	R88G-HPG65A127K5SB□	1/12	

*1. This is the set bolt.

Backlash: 15 Arcminutes Max.

<Cylinder Type>

● 3,000-r/min Servomotors (50 to 750 W)

Model			Dimensions (mm)											
			LM	LR	C1	C2	D1	D2	D3	D4	E3	F	G	
50 W	1/5	R88G-VRSF05B100CJ	67.5	32	52	40	46	60	50	45	10	3	6	
	1/9	R88G-VRSF09B100CJ	67.5	32	52	40	46	60	50	45	10	3	6	
	1/15	R88G-VRSF15B100CJ	78.0	32	52	40	46	60	50	45	10	3	6	
	1/25	R88G-VRSF25B050CJ	78.0	32	52	40	46	60	50	45	10	3	6	
100 W	1/5	R88G-VRSF05B100CJ	67.5	32	52	40	46	60	50	45	10	3	6	
	1/9	R88G-VRSF09B100CJ	67.5	32	52	40	46	60	50	45	10	3	6	
	1/15	R88G-VRSF15B100CJ	78.0	32	52	40	46	60	50	45	10	3	6	
	1/25	R88G-VRSF25B100CJ	78.0	32	52	40	46	60	50	45	10	3	6	
200 W	1/5	R88G-VRSF05B200CJ	72.5	32	52	60	70	60	50	45	10	3	10	
	1/9	R88G-VRSF09C200CJ	89.5	50	78	60	70	90	70	62	17	3	8	
	1/15	R88G-VRSF15C200CJ	100.0	50	78	60	70	90	70	62	17	3	8	
	1/25	R88G-VRSF25C200CJ	100.0	50	78	60	70	90	70	62	17	3	8	
400 W	1/5	R88G-VRSF05C400CJ	89.5	50	78	60	70	90	70	62	17	3	8	
	1/9	R88G-VRSF09C400CJ	89.5	50	78	60	70	90	70	62	17	3	8	
	1/15	R88G-VRSF15C400CJ	100.0	50	78	60	70	90	70	62	17	3	8	
	1/25	R88G-VRSF25C400CJ	100.0	50	78	60	70	90	70	62	17	3	8	
750 W	1/5	R88G-VRSF05C750CJ	93.5	50	78	80	90	90	70	62	17	3	10	
	1/9	R88G-VRSF09D750CJ	97.5	61	98	80	90	115	90	75	18	5	10	
	1/15	R88G-VRSF15D750CJ	110.0	61	98	80	90	115	90	75	18	5	10	
	1/25	R88G-VRSF25D750CJ	110.0	61	98	80	90	115	90	75	18	5	10	

Note: 1. The standard models have a straight shaft with a key.
Note: 2. The diameter of the motor shaft insertion portion is the same as the diameter of the shaft of the corresponding motor.
Note: 3. Applicable for the servomotors with key, if the key is removed.

Outline Drawings

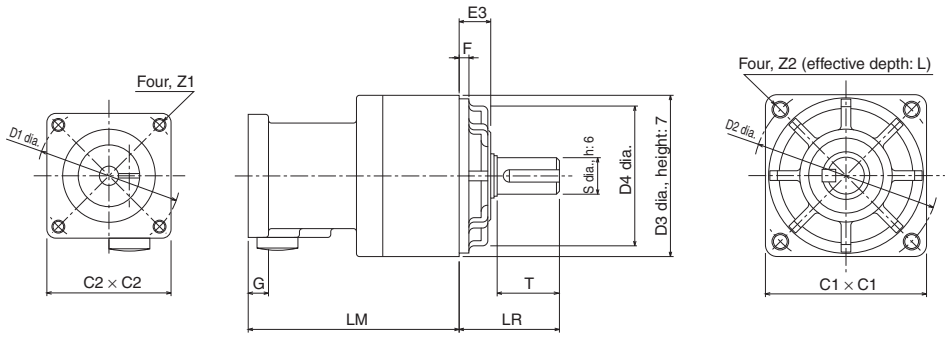

	Dimensions (mm)										Model		
	S	T	Z1	Z2	AT	L	Key dimensions						
							QK	b	h	t1			
	12	20	M4	M5	M3	12	16	4	4	2.5	**R88G-VRSF05B100CJ**	1/5	50 W
	12	20	M4	M5	M3	12	16	4	4	2.5	**R88G-VRSF09B100CJ**	1/9	
	12	20	M4	M5	M3	12	16	4	4	2.5	**R88G-VRSF15B100CJ**	1/15	
	12	20	M4	M5	M3	12	16	4	4	2.5	**R88G-VRSF25B050CJ**	1/25	
	12	20	M4	M5	M3	12	16	4	4	2.5	**R88G-VRSF05B100CJ**	1/5	100 W
	12	20	M4	M5	M3	12	16	4	4	2.5	**R88G-VRSF09B100CJ**	1/9	
	12	20	M4	M5	M3	12	16	4	4	2.5	**R88G-VRSF15B100CJ**	1/15	
	12	20	M4	M5	M3	12	16	4	4	2.5	**R88G-VRSF25B100CJ**	1/25	
	12	20	M5	M5	M4	12	16	4	4	2.5	**R88G-VRSF05B200CJ**	1/5	200 W
	19	30	M5	M6	M4	20	22	6	6	3.5	**R88G-VRSF09C200CJ**	1/9	
	19	30	M5	M6	M4	20	22	6	6	3.5	**R88G-VRSF15C200CJ**	1/15	
	19	30	M5	M6	M4	20	22	6	6	3.5	**R88G-VRSF25C200CJ**	1/25	
	19	30	M5	M6	M4	20	22	6	6	3.5	**R88G-VRSF05C400CJ**	1/5	400 W
	19	30	M5	M6	M4	20	22	6	6	3.5	**R88G-VRSF09C400CJ**	1/9	
	19	30	M5	M6	M4	20	22	6	6	3.5	**R88G-VRSF15C400CJ**	1/15	
	19	30	M5	M6	M4	20	22	6	6	3.5	**R88G-VRSF25C400CJ**	1/25	
	19	30	M5	M6	M4	20	22	6	6	3.5	**R88G-VRSF05C750CJ**	1/5	750 W
	24	40	M5	M8	M4	20	30	8	7	4	**R88G-VRSF09D750CJ**	1/9	
	24	40	M5	M8	M4	20	30	8	7	4	**R88G-VRSF15D750CJ**	1/15	
	24	40	M5	M8	M4	20	30	8	7	4	**R88G-VRSF25D750CJ**	1/25	

Outline Drawings

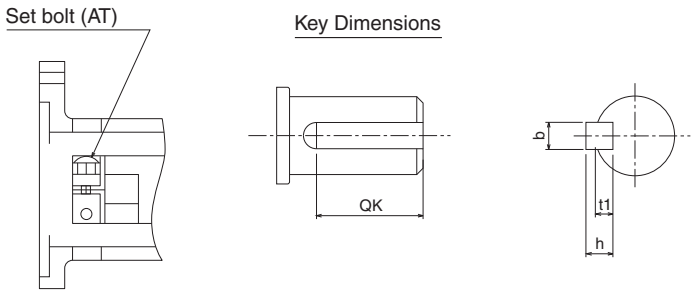

Backlash: 15 Arcminutes Max.

<Flat Servomotors>

● 3,000-r/min Servomotors (100 to 400 W)

Model			Dimensions (mm)											
			LM	LR	C1	C2	D1	D2	D3	D4	E3	F	G	
100 W	1/5	**R88G-VRSF05B100PCJ**	67.5	32	52	60	70	60	50	45	10	3	8	
	1/9	**R88G-VRSF09B100PCJ**	67.5	32	52	60	70	60	50	45	10	3	8	
	1/15	**R88G-VRSF15B100PCJ**	78.0	32	52	60	70	60	50	45	10	3	8	
	1/25	**R88G-VRSF25B100PCJ**	78.0	32	52	60	70	60	50	45	10	3	8	
200 W	1/5	**R88G-VRSF05B200PCJ**	72.5	32	52	80	90	60	50	45	10	3	12	
	1/9	**R88G-VRSF09C200PCJ**	89.5	50	78	80	90	90	70	62	17	3	12	
	1/15	**R88G-VRSF15C200PCJ**	100.0	50	78	80	90	90	70	62	17	3	12	
	1/25	**R88G-VRSF25C200PCJ**	100.0	50	78	80	90	90	70	62	17	3	12	
400 W	1/5	**R88G-VRSF05C400PCJ**	89.5	50	78	80	90	90	70	62	17	3	12	
	1/9	**R88G-VRSF09C400PCJ**	89.5	50	78	80	90	90	70	62	17	3	12	
	1/15	**R88G-VRSF15C400PCJ**	100.0	50	78	80	90	90	70	62	17	3	12	
	1/25	**R88G-VRSF25C400PCJ**	100.0	50	78	80	90	90	70	62	17	3	12	

Note: 1. The standard models have a straight shaft with a key.
Note: 2. Applicable for the servomotors with key, if the key is removed.

Outline Drawings

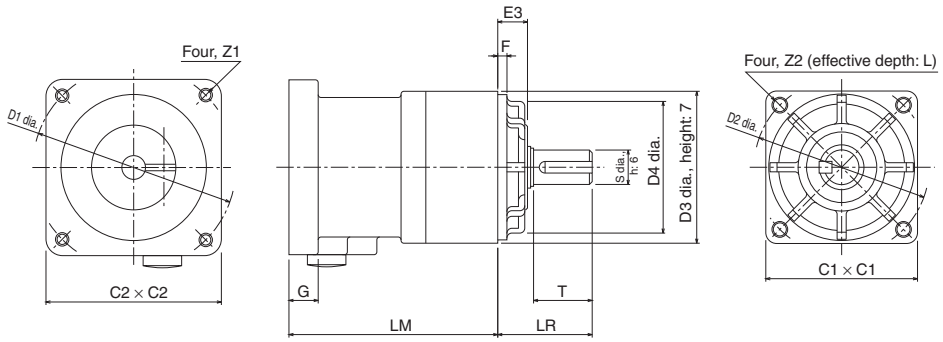

	Dimensions (mm)										Model		
	S	T	Z1	Z2	AT	L	Key dimensions						
							QK	b	h	t1			
	12	20	M4	M5	M3	12	16	4	4	2.5	**R88G-VRSF05B100PCJ**	1/5	100 W
	12	20	M4	M5	M3	12	16	4	4	2.5	**R88G-VRSF09B100PCJ**	1/9	
	12	20	M4	M5	M3	12	16	4	4	2.5	**R88G-VRSF15B100PCJ**	1/15	
	12	20	M4	M5	M3	12	16	4	4	2.5	**R88G-VRSF25B100PCJ**	1/25	
	12	20	M5	M5	M4	12	16	4	4	2.5	**R88G-VRSF05B200PCJ**	1/5	200 W
	19	30	M5	M6	M4	20	22	6	6	3.5	**R88G-VRSF09C200PCJ**	1/9	
	19	30	M5	M6	M4	20	22	6	6	3.5	**R88G-VRSF15C200PCJ**	1/15	
	19	30	M5	M6	M4	20	22	6	6	3.5	**R88G-VRSF25C200PCJ**	1/25	
	19	30	M5	M6	M4	20	22	6	6	3.5	**R88G-VRSF05C400PCJ**	1/5	400 W
	19	30	M5	M6	M4	20	22	6	6	3.5	**R88G-VRSF09C400PCJ**	1/9	
	19	30	M5	M6	M4	20	22	6	6	3.5	**R88G-VRSF15C400PCJ**	1/15	
	19	30	M5	M6	M4	20	22	6	6	3.5	**R88G-VRSF25C400PCJ**	1/25	

Outline Drawings

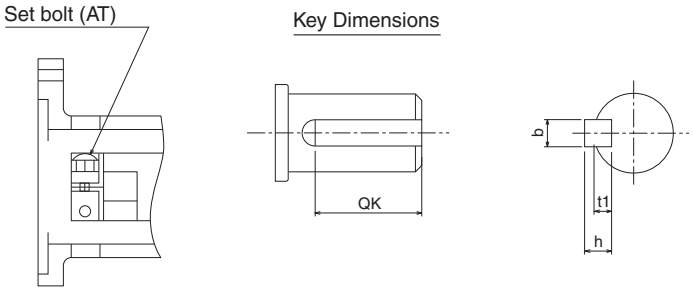

● Parameter Unit

R88A-PR02G

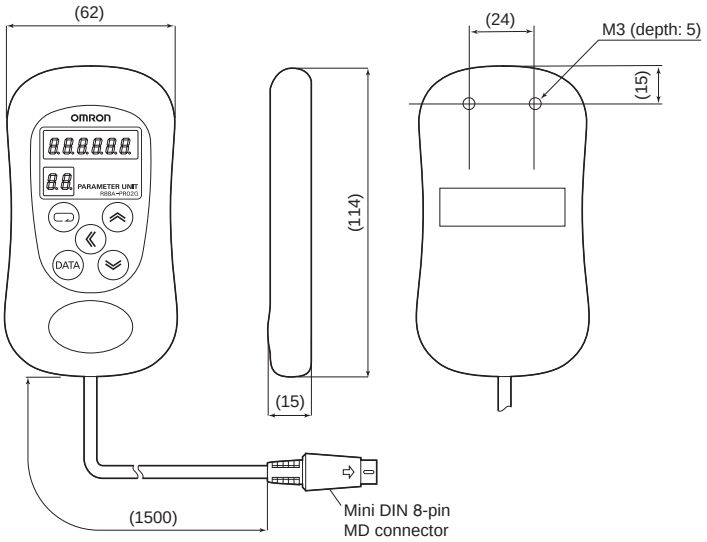

● External Regeneration Resistor

R88A-RR22047S1

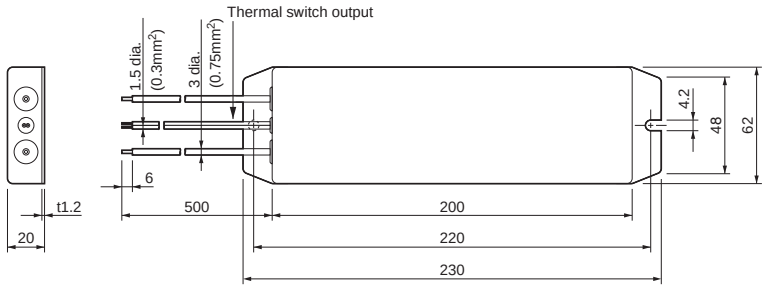

R88A-RR08050S/-RR080100S

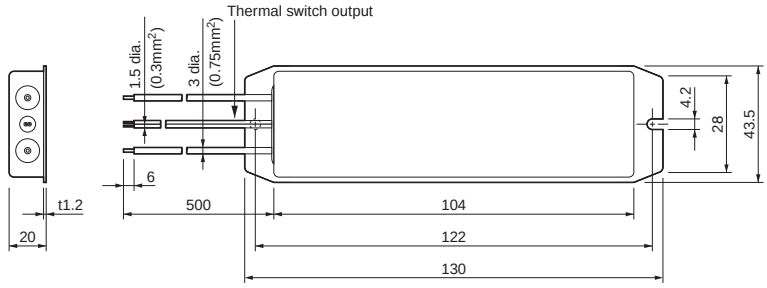

R88A-RR50020S

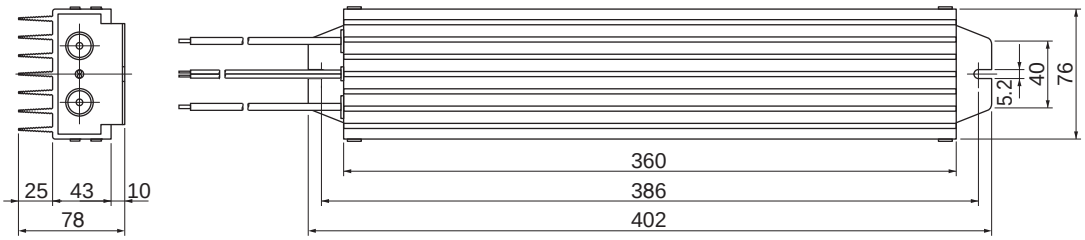

Reactor

3G3AX-DL2002
3G3AX-DL2004

Model	L
3G3AX-DL2002	85
3G3AX-DL2004	95

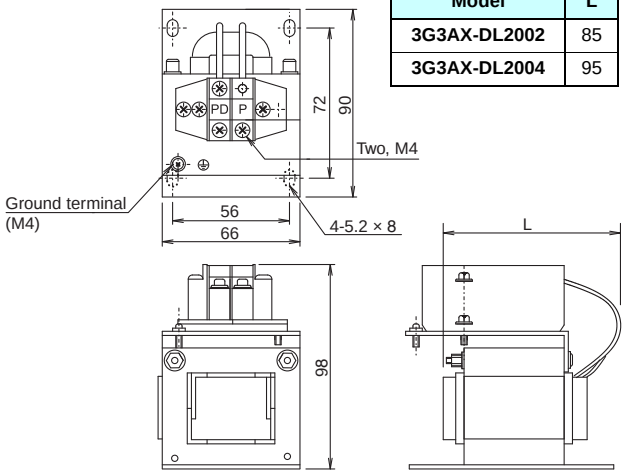

3G3AX-DL2007
3G3AX-DL2015

Model	L
3G3AX-DL2007	105
3G3AX-DL2015	115

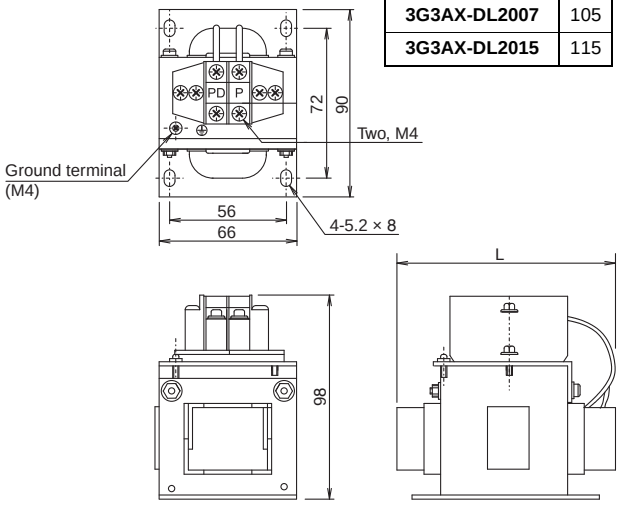

3G3AX-DL2022

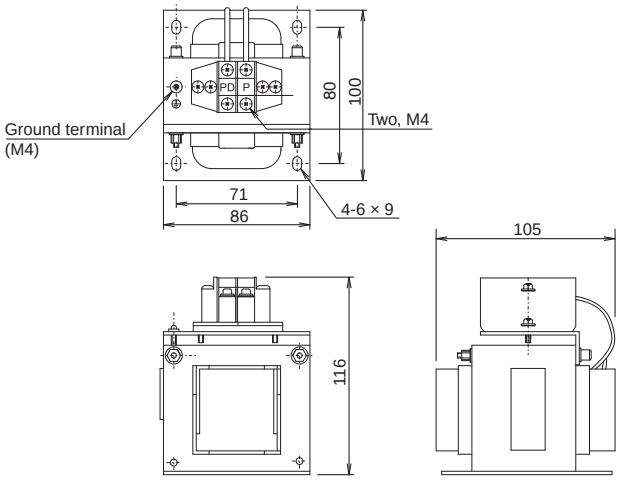

3G3AX-AL2025
3G3AX-AL2055

Model	A	C	Y
3G3AX-AL2025	120	82	67
3G3AX-AL2055	120	98	75

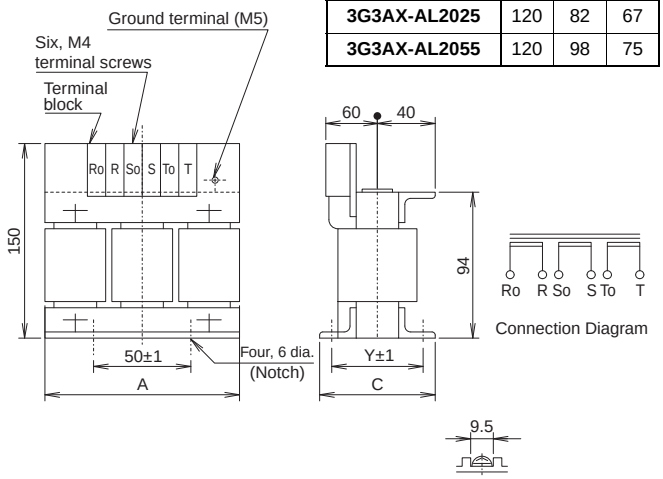

3G3AX-AL2110
3G3AX-AL2220

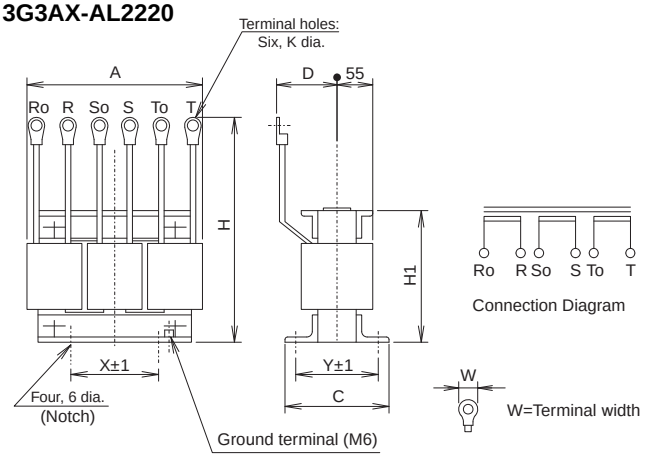

Model	A	C	D	H	H1	X	Y	K	W
3G3AX-AL2110	150	103	70	170	108	60	80	5.3	12
3G3AX-AL2220	180	113	75	190	140	90	90	8.4	16.5

About Manuals

English Cat. No.	Japanese Cat. No.	Type	Name
I562	SBCE-349	R88M-G/R88D-GT	G-series AC Servomotors/Servo Drives with General-purpose Pulse-string or Analog Inputs User's Manual
W453	SBCE-337	CXONE-□□□□C-V□/ CXONE-□□□□D-V□	CX-Drive OPERATION MANUAL

G-series AC Servomotors/Servo Drives with Built-in MECHATROLINK-II Communications

R88M-G/R88D-GN□-ML2

Saves Space and Enables MECHATROLINK-II Communications with the Controller.

- Data transfer using MECHATROLINK-Ⅱ (See Note 1) Communications:
  All control data that can be interfaced between the Servo Driver and the Controller is transmitted using data communications. This enables maximizing the Servomotor performance without restricting the transmission performance of the control signals.
- Having a communications module built into the Servo Driver significantly saves space in the control panel.

Note: 1. MECHATROLINK-II is a registered trademark of the MECHATROLINK Members Association.
Note: 2. CX-Drive (version 1.62) support for G-series Servo Drivers with MECHATROLINK-II Communications can be obtained by using the CX-One V2/V3 auto-update function from July 31, 2008.

System Configuration

Controllers

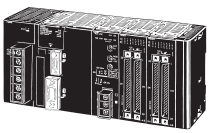

CJ-series PLC

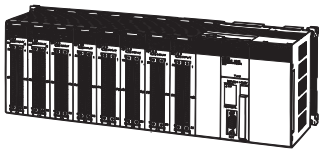

CS-series PLC

- **Position Control Unit**



CJ1W-NCF71



CS1W-NCF71

Monitor Software

CX-Drive
See Note 2



Parameter Unit

R88A-PR02G

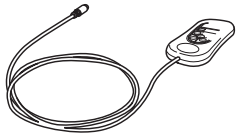

Personal Computer Monitor Cable

R88A-CCG002P2

MECHATROLINK-Ⅱ

MECHATROLINK-Ⅱ Cables

(With ring core and USB connector on both ends)
FNY-W6003-□□ (OMRON model number)

MECHATROLINK-Ⅱ Repeater

Number of connected devices	Maximum transmission distance		
	0 to 30 m	30 to 50 m	50 to 100 m
1 to 15	Repeater not required.	Repeater not required.	Repeater required.
16	Repeater not required.	Repeater required.	Repeater required.

Support Software

- **CX-One FA Integrated Tool Package (for Ver.2.0) (Including CX-Motion-NCF** (See Note 3) **and CX-Drive)**



Note 3. The CX-Motion-NCF is supported from version 1.6.



AC Servo Drives

● G-series
AC Servo Drive
R88D-GN□□-ML2

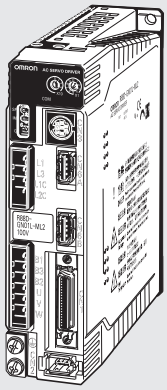

Peripheral Devices

● Reactors
3G3AX-DL
3G3AX-AL
● External Regeneration Resistors
R88A-RR

I/O signals

Power Cables

● Standard Cables
Without Brake
R88A-CAG□□□□S
With Brake
R88A-CAG□□□□B
● Robot Cable
Without Brakes
R88A-CAG□□□□SR
With Brake
R88A-CAG□□□□BR

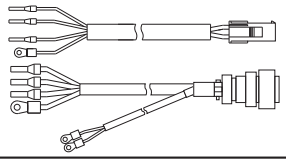

Motor power signals

feedback signals

Encoder Cables

● Standard Cables
50 W to 750 W
R88A-CRG□□□□C
900 W to 7.5 kW
R88A-CRGC□□□N
● Robot Cables
50 W to 750 W
R88A-CRG□□□□CR
900 W to 7.5 kW
R88A-CRGC□□□NR

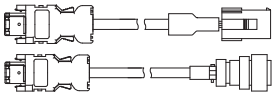

Absolute Encoder Battery Cable

R88A-CRGD0R3C (-BS)

(One Battery is included with Servo Drivers with model numbers ending in "BS.")

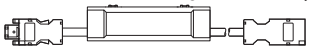

*Not required if a battery is connected to the control connector (CN1).

Connector-Terminal Block Conversion Units and Cable

● Connector-Terminal Block Conversion Unit
XW2□-20G□

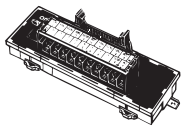

● Cable
XW2Z-□□□J-B33

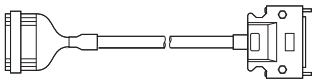

AC Servomotors

● Model without Decelerators
R88M-G

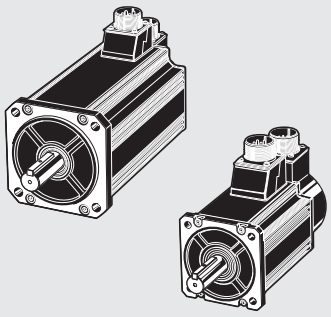

Decelerators

● Backlash: 3 Arcminutes Max.
R88G-HPG
Backlash: 15 Arcminutes Max.
R88G-VRSF

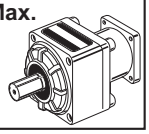

Interpreting Model Numbers

● Servo Driver Model Numbers

The model number provides information such as the Servo Drive type, the applicable Servomotor capacity, and the power supply voltage.

R88D-GN01H-ML2

G-series
Servo Drive

Drive Type
N: Network type

Applicable Servomotor Capacity
A5: 50 W
01: 100 W
02: 200 W
04: 400 W
08: 750 W
10: 1 kW
15: 1.5 kW
20: 2 kW
30: 3 kW
50: 5 kW
75: 7.5 kW

Power Supply Voltage
L: 100 VAC
H: 200 VAC

Network type
ML2: MECHATROLINK-II Communications

● Servomotor Model Numbers

R88M-GP100 30 H-B O S2

G-series
Servomotor

Motor Type
Blank: Cylinder type
P: Flat type

Servomotor Capacity
050: 50 W
100: 100 W
200: 200 W
400: 400 W
750: 750 W
900: 900 W
1K0: 1 kW
1K5: 1.5 kW
2K0: 2 kW
3K0: 3 kW
4K0: 4 kW
4K5: 4.5 kW
5K0: 5 kW
6K0: 6 kW
7K5: 7.5 kW

Rated Rotation Speed
10: 1,000 r/min
15: 1,500 r/min
20: 2,000 r/min
30: 3,000 r/min

Applied Voltage
H: 200 VAC with incremental encoder specifications
L: 100 VAC with incremental encoder specifications
T: 200 VAC with absolute encoder specifications
S: 100 VAC with absolute encoder specifications

Option
Blank: Straight shaft
B: With brake
O: With oil seal
S2: Withkey and tap

● Understanding Decelerator Model Numbers

Backlash = 3' Max.

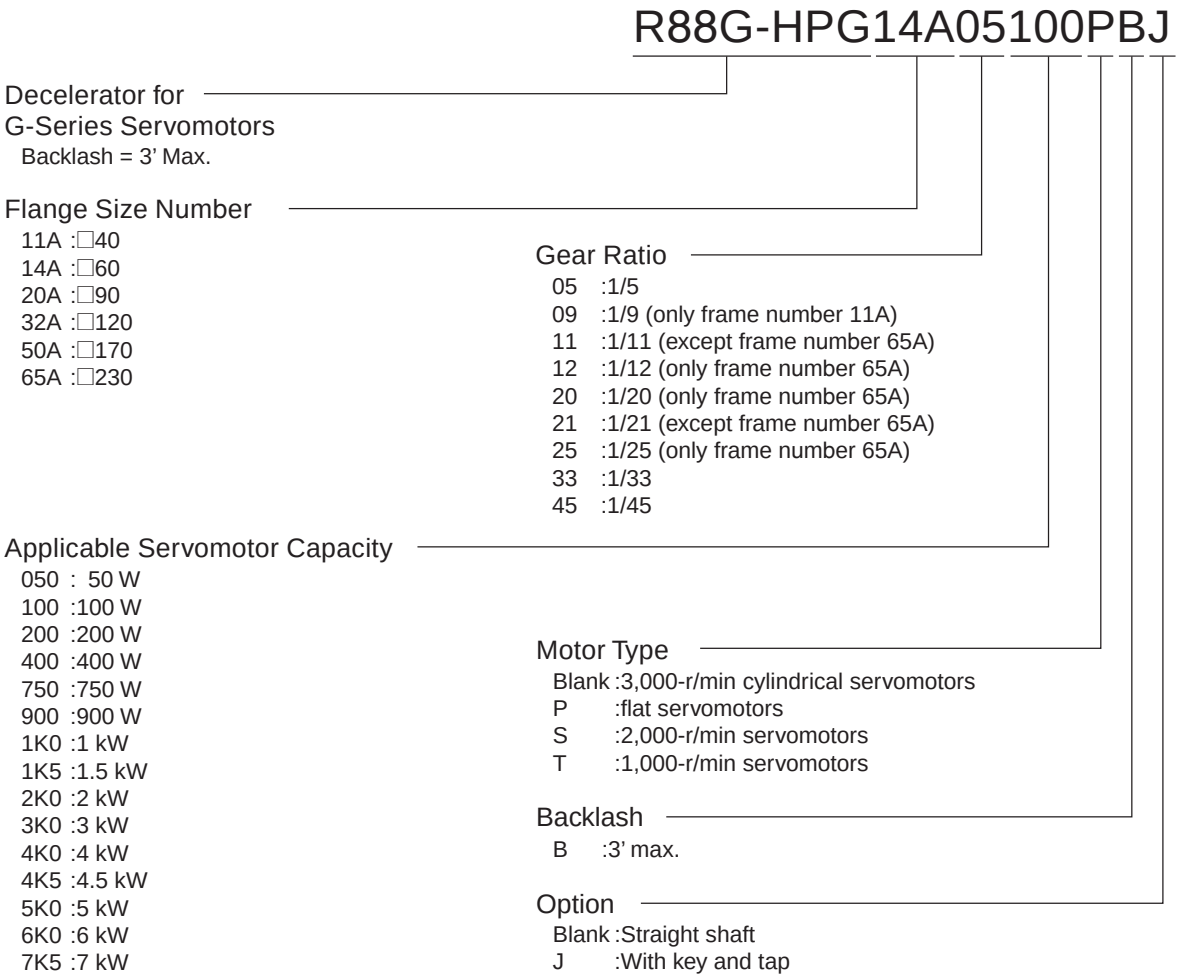

Backlash = 15' Max.

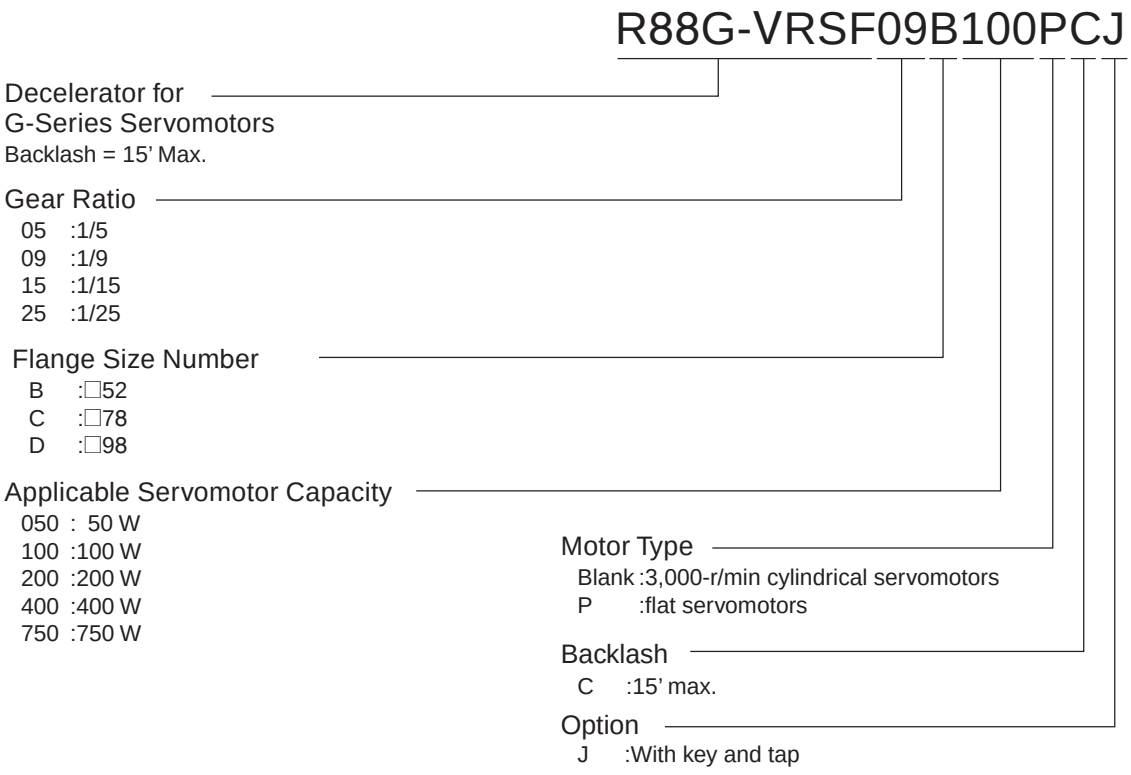

Ordering Information

● Servo Drives

Specifications		Model
Single-phase 100 VAC	50 W	**R88D-GNA5L-ML2**
	100 W	**R88D-GN01L-ML2**
	200 W	**R88D-GN02L-ML2**
	400 W	**R88D-GN04L-ML2**
Single-phase 200 VAC	50 W	**R88D-GN01H-ML2**
	100 W	
	200 W	**R88D-GN02H-ML2**
	400 W	**R88D-GN04H-ML2**
Single-phase/three-phase 200 VAC	750 W	**R88D-GN08H-ML2**
	1 kW	**R88D-GN10H-ML2**
	900 W	**R88D-GN15H-ML2**
	1 kW	
	1.5 kW	
Three-phase 200 VAC	2 kW	**R88D-GN20H-ML2**
	2 kW	**R88D-GN30H-ML2**
	3 kW	
	3 kW	**R88D-GN50H-ML2**
	4 kW	
	4.5 kW	
	5 kW	
	6 kW	**R88D-GN75H-ML2**
	7.5 kW	

Servomotors

INC 3,000-r/min Cylindrical Servomotors

Specifications			Model	
			Straight shaft	Straight shaft with key and tap
Without brake	100 V	50 W	R88M-G05030H	R88M-G05030H-S2
		100 W	R88M-G10030L	R88M-G10030L-S2
		200 W	R88M-G20030L	R88M-G20030L-S2
		400 W	R88M-G40030L	R88M-G40030L-S2
	200 V	50 W	R88M-G05030H	R88M-G05030H-S2
		100 W	R88M-G10030H	R88M-G10030H-S2
		200 W	R88M-G20030H	R88M-G20030H-S2
		400 W	R88M-G40030H	R88M-G40030H-S2
		750 W	R88M-G75030H	R88M-G75030H-S2
With brake	100 V	50 W	R88M-G05030H-B	R88M-G05030H-BS2
		100 W	R88M-G10030L-B	R88M-G10030L-BS2
		200 W	R88M-G20030L-B	R88M-G20030L-BS2
		400 W	R88M-G40030L-B	R88M-G40030L-BS2
	200 V	50 W	R88M-G05030H-B	R88M-G05030H-BS2
		100 W	R88M-G10030H-B	R88M-G10030H-BS2
		200 W	R88M-G20030H-B	R88M-G20030H-BS2
		400 W	R88M-G40030H-B	R88M-G40030H-BS2
		750 W	R88M-G75030H-B	R88M-G75030H-BS2

Note: Models with oil seals are also available.

ABS/INC 3,000-r/min Cylindrical Servomotors

Specifications			Model	
			Straight shaft	Straight shaft with key and tap
Without brake	100 V	50 W	R88M-G05030T	R88M-G05030T-S2
		100 W	R88M-G10030S	R88M-G10030S-S2
		200 W	R88M-G20030S	R88M-G20030S-S2
		400 W	R88M-G40030S	R88M-G40030S-S2
	200 V	50 W	R88M-G05030T	R88M-G05030T-S2
		100 W	R88M-G10030T	R88M-G10030T-S2
		200 W	R88M-G20030T	R88M-G20030T-S2
		400 W	R88M-G40030T	R88M-G40030T-S2
		750 W	R88M-G75030T	R88M-G75030T-S2
		1 kW	R88M-G1K030T	R88M-G1K030T-S2
		1.5 kW	R88M-G1K530T	R88M-G1K530T-S2
		2 kW	R88M-G2K030T	R88M-G2K030T-S2
		3 kW	R88M-G3K030T	R88M-G3K030T-S2
		4 kW	R88M-G4K030T	R88M-G4K030T-S2
		5 kW	R88M-G5K030T	R88M-G5K030T-S2
With brake	100 V	50 W	R88M-G05030T-B	R88M-G05030T-BS2
		100 W	R88M-G10030S-B	R88M-G10030S-BS2
		200 W	R88M-G20030S-B	R88M-G20030S-BS2
		400 W	R88M-G40030S-B	R88M-G40030S-BS2
	200 V	50 W	R88M-G05030T-B	R88M-G05030T-BS2
		100 W	R88M-G10030T-B	R88M-G10030T-BS2
		200 W	R88M-G20030T-B	R88M-G20030T-BS2
		400 W	R88M-G40030T-B	R88M-G40030T-BS2
		750 W	R88M-G75030T-B	R88M-G75030T-BS2
		1 kW	R88M-G1K030T-B	R88M-G1K030T-BS2
		1.5 kW	R88M-G1K530T-B	R88M-G1K530T-BS2
		2 kW	R88M-G2K030T-B	R88M-G2K030T-BS2
		3 kW	R88M-G3K030T-B	R88M-G3K030T-BS2
		4 kW	R88M-G4K030T-B	R88M-G4K030T-BS2
		5 kW	R88M-G5K030T-B	R88M-G5K030T-BS2

Note: Models with oil seals are also available.

INC 3,000-r/min Flat Servomotors

Specifications			Model	
			Straight shaft	Straight shaft with key and tap
Without brake	100 V	100 W	R88M-GP10030L	R88M-GP10030L-S2
		200 W	R88M-GP20030L	R88M-GP20030L-S2
		400 W	R88M-GP40030L	R88M-GP40030L-S2
	200 V	100 W	R88M-GP10030H	R88M-GP10030H-S2
		200 W	R88M-GP20030H	R88M-GP20030H-S2
		400 W	R88M-GP40030H	R88M-GP40030H-S2
With brake	100 V	100 W	R88M-GP10030L-B	R88M-GP10030L-BS2
		200 W	R88M-GP20030L-B	R88M-GP20030L-BS2
		400 W	R88M-GP40030L-B	R88M-GP40030L-BS2
	200 V	100 W	R88M-GP10030H-B	R88M-GP10030H-BS2
		200 W	R88M-GP20030H-B	R88M-GP20030H-BS2
		400 W	R88M-GP40030H-B	R88M-GP40030H-BS2

Note: Models with oil seals are also available.

ABS/INC 3,000-r/min Flat Servomotors

Specifications			Model	
			Straight shaft	Straight shaft with key and tap
Without brake	100 V	100 W	R88M-GP10030S	R88M-GP10030S-S2
		200 W	R88M-GP20030S	R88M-GP20030S-S2
		400 W	R88M-GP40030S	R88M-GP40030S-S2
	200 V	100 W	R88M-GP10030T	R88M-GP10030T-S2
		200 W	R88M-GP20030T	R88M-GP20030T-S2
		400 W	R88M-GP40030T	R88M-GP40030T-S2
With brake	100 V	100 W	R88M-GP10030S-B	R88M-GP10030S-BS2
		200 W	R88M-GP20030S-B	R88M-GP20030S-BS2
		400 W	R88M-GP40030S-B	R88M-GP40030S-BS2
	200 V	100 W	R88M-GP10030T-B	R88M-GP10030T-BS2
		200 W	R88M-GP20030T-B	R88M-GP20030T-BS2
		400 W	R88M-GP40030T-B	R88M-GP40030T-BS2

Note: Models with oil seals are also available.

ABS/INC 2,000-r/min Cylindrical Servomotors

Specifications			Model	
			Straight shaft	Straight shaft with key and tap
Without brake	200 V	1 kW	R88M-G1K020T	R88M-G1K020T-S2
		1.5 kW	R88M-G1K520T	R88M-G1K520T-S2
		2 kW	R88M-G2K020T	R88M-G2K020T-S2
		3 kW	R88M-G3K020T	R88M-G3K020T-S2
		4 kW	R88M-G4K020T	R88M-G4K020T-S2
		5 kW	R88M-G5K020T	R88M-G5K020T-S2
		7.5 kW	R88M-G7K515T	R88M-G7K515T-S2
With brake	200 V	1 kW	R88M-G1K020T-B	R88M-G1K020T-BS2
		1.5 kW	R88M-G1K520T-B	R88M-G1K520T-BS2
		2 kW	R88M-G2K020T-B	R88M-G2K020T-BS2
		3 kW	R88M-G3K020T-B	R88M-G3K020T-BS2
		4 kW	R88M-G4K020T-B	R88M-G4K020T-BS2
		5 kW	R88M-G5K020T-B	R88M-G5K020T-BS2
		7.5 kW	R88M-G7K515T-B	R88M-G7K515T-BS2

Note: 1. Models with oil seals are also available.
Note: 2. The rated rotation speed for 7.5-kW Servomotors is 1,500 r/min.

ABS/INC 1,000-r/min Cylindrical Servomotors

Specifications			Model	
			Straight shaft	Straight shaft with key and tap
Without brake	200 V	900 W	**R88M-G90010T**	**R88M-G90010T-S2**
		2 kW	**R88M-G2K010T**	**R88M-G2K010T-S2**
		3 kW	**R88M-G3K010T**	**R88M-G3K010T-S2**
		4.5 kW	**R88M-G4K510T**	**R88M-G4K510T-S2**
		6 kW	**R88M-G6K010T**	**R88M-G6K010T-S2**
With brake	200 V	900 W	**R88M-G90010T-B**	**R88M-G90010T-BS2**
		2 kW	**R88M-G2K010T-B**	**R88M-G2K010T-BS2**
		3 kW	**R88M-G3K010T-B**	**R88M-G3K010T-BS2**
		4.5 kW	**R88M-G4K510T-B**	**R88M-G4K510T-BS2**
		6 kW	**R88M-G6K010T-B**	**R88M-G6K010T-BS2**

Note: Models with oil seals are also available.

● Decelerators

Backlash: 3 Arcminutes Max.

Decelerators for 3,000-r/min Cylindrical Servomotors

Straight shaft

Specifications		Model
Motor capacity	Gear ratio	
50 W	1/5	R88G-HPG11A05100B
	1/9	R88G-HPG11A09050B
	1/21	R88G-HPG14A21100B
	1/33	R88G-HPG14A33050B
	1/45	R88G-HPG14A45050B
100 W	1/5	R88G-HPG11A05100B
	1/11	R88G-HPG14A11100B
	1/21	R88G-HPG14A21100B
	1/33	R88G-HPG20A33100B
	1/45	R88G-HPG20A45100B
200 W	1/5	R88G-HPG14A05200B
	1/11	R88G-HPG14A11200B
	1/21	R88G-HPG20A21200B
	1/33	R88G-HPG20A33200B
	1/45	R88G-HPG20A45200B
400 W	1/5	R88G-HPG14A05400B
	1/11	R88G-HPG20A11400B
	1/21	R88G-HPG20A21400B
	1/33	R88G-HPG32A33400B
	1/45	R88G-HPG32A45400B
750 W	1/5	R88G-HPG20A05750B
	1/11	R88G-HPG20A11750B
	1/21	R88G-HPG32A21750B
	1/33	R88G-HPG32A33750B
	1/45	R88G-HPG32A45750B
1 kW	1/5	R88G-HPG32A051K0B
	1/11	R88G-HPG32A111K0B
	1/21	R88G-HPG32A211K0B
	1/33	R88G-HPG32A331K0B
	1/45	R88G-HPG50A451K0B
1.5 kW	1/5	R88G-HPG32A052K0B
	1/11	R88G-HPG32A112K0B
	1/21	R88G-HPG32A211K5B
	1/33	R88G-HPG50A332K0B
	1/45	R88G-HPG50A451K5B
2 kW	1/5	R88G-HPG32A052K0B
	1/11	R88G-HPG32A112K0B
	1/21	R88G-HPG50A212K0B
	1/33	R88G-HPG50A332K0B
3 kW	1/5	R88G-HPG32A053K0B
	1/11	R88G-HPG50A113K0B
	1/21	R88G-HPG50A213K0B
4 kW	1/5	R88G-HPG32A054K0B
	1/11	R88G-HPG50A115K0B
5 kW	1/5	R88G-HPG50A055K0B
	1/11	R88G-HPG50A115K0B

Note: 1. The standard models have a straight shaft.
Note: 2. To order a Servomotor with a straight shaft with key, add "J" to the end of the model number.

Backlash: 3 Arcminutes Max.

Decelerators for 3,000-r/min Flat Servomotors

Straight shaft

Specifications		Model
Motor capacity	Gear ratio	
100 W	1/5	R88G-HPG11A05100PB
	1/11	R88G-HPG14A11100PB
	1/21	R88G-HPG14A21100PB
	1/33	R88G-HPG20A33100PB
	1/45	R88G-HPG20A45100PB
200 W	1/5	R88G-HPG14A05200PB
	1/11	R88G-HPG20A11200PB
	1/21	R88G-HPG20A21200PB
	1/33	R88G-HPG20A33200PB
	1/45	R88G-HPG20A45200PB
400 W	1/5	R88G-HPG20A05400PB
	1/11	R88G-HPG20A11400PB
	1/21	R88G-HPG20A21400PB
	1/33	R88G-HPG32A33400PB
	1/45	R88G-HPG32A45400PB

Note: 1. The standard models have a straight shaft.
Note: 2. To order a Servomotor with a straight shaft with key, add "J" to the end of the model number.

Backlash: 3 Arcminutes Max.
Decelerators for 2,000-r/min Cylindrical Servomotors
Straight shaft

Specifications		Model
Motor capacity	Gear ratio	
1 kW	1/5	R88G-HPG32A053K0B
	1/11	R88G-HPG32A112K0SB
	1/21	R88G-HPG32A211K0SB
	1/33	R88G-HPG50A332K0SB
	1/45	R88G-HPG50A451K0SB
1.5 kW	1/5	R88G-HPG32A053K0B
	1/11	R88G-HPG32A112K0SB
	1/21	R88G-HPG50A213K0B
	1/33	R88G-HPG50A332K0SB
2 kW	1/5	R88G-HPG32A053K0B
	1/11	R88G-HPG32A112K0SB
	1/21	R88G-HPG50A213K0B
	1/33	R88G-HPG50A332K0SB
3 kW	1/5	R88G-HPG32A054K0B
	1/11	R88G-HPG50A115K0B
	1/21	R88G-HPG50A213K0SB
	1/25	R88G-HPG65A253K0SB
4 kW	1/5	R88G-HPG50A054K0SB
	1/11	R88G-HPG50A114K0SB
	1/20	R88G-HPG65A204K0SB
	1/25	R88G-HPG65A254K0SB
5 kW	1/5	R88G-HPG50A055K0SB
	1/11	R88G-HPG50A115K0SB
	1/20	R88G-HPG65A205K0SB
	1/25	R88G-HPG65A255K0SB
7.5 kW	1/5	R88G-HPG65A057K5SB
	1/12	R88G-HPG65A127K5SB

Note: 1. The standard models have a straight shaft.
Note: 2. To order a Servomotor with a straight shaft with key, add “J” to the end of the model number.

Backlash: 3 Arcminutes Max.
Decelerators for 1,000-r/min Cylindrical Servomotors
Straight shaft

Specifications		Model
Motor capacity	Gear ratio	
900 W	1/5	R88G-HPG32A05900TB
	1/11	R88G-HPG32A11900TB
	1/21	R88G-HPG50A21900TB
	1/33	R88G-HPG50A33900TB
2 kW	1/5	R88G-HPG32A052K0TB
	1/11	R88G-HPG50A112K0TB
	1/21	R88G-HPG50A212K0TB
	1/25	R88G-HPG65A255K0SB
3 kW	1/5	R88G-HPG50A055K0SB
	1/11	R88G-HPG50A115K0SB
	1/20	R88G-HPG65A205K0SB
	1/25	R88G-HPG65A255K0SB
4.5 kW	1/5	R88G-HPG50A054K5TB
	1/12	R88G-HPG65A127K5SB
	1/20	R88G-HPG65A204K5TB
6 kW	1/5	R88G-HPG65A057K5SB
	1/12	R88G-HPG65A127K5SB

Note: 1. The standard models have a straight shaft.
Note: 2. Models with a key and tap are indicated with "J" at the end of the model number.

Backlash: 15 Arcminutes Max.
Decelerators for 3,000-r/min Cylindrical Servomotors
Straight shaft with key and tap

Specifications		Model
Motor capacity	Gear ratio	
50 W	1/5	R88G-VRSF05B100CJ
	1/9	R88G-VRSF09B100CJ
	1/15	R88G-VRSF15B100CJ
	1/25	R88G-VRSF25B100CJ
100 W	1/5	R88G-VRSF05B100CJ
	1/9	R88G-VRSF09B100CJ
	1/15	R88G-VRSF15B100CJ
	1/25	R88G-VRSF25B100CJ
200 W	1/5	R88G-VRSF05B200CJ
	1/9	R88G-VRSF09C200CJ
	1/15	R88G-VRSF15C200CJ
	1/25	R88G-VRSF25C200CJ
400 W	1/5	R88G-VRSF05C400CJ
	1/9	R88G-VRSF09C400CJ
	1/15	R88G-VRSF15C400CJ
	1/25	R88G-VRSF25C400CJ
750 W	1/5	R88G-VRSF05C750CJ
	1/9	R88G-VRSF09D750CJ
	1/15	R88G-VRSF15D750CJ
	1/25	R88G-VRSF25D750CJ

Backlash: 15 Arcminutes Max.
Decelerators for 3,000-r/min Flat Servomotors
Straight shaft with key and tap

Specifications		Model
Motor capacity	Gear ratio	
100 W	1/5	R88G-VRSF05B100PCJ
	1/9	R88G-VRSF09B100PCJ
	1/15	R88G-VRSF15B100PCJ
	1/25	R88G-VRSF25B100PCJ
200 W	1/5	R88G-VRSF05B200PCJ
	1/9	R88G-VRSF09C200PCJ
	1/15	R88G-VRSF15C200PCJ
	1/25	R88G-VRSF25C200PCJ
400 W	1/5	R88G-VRSF05C400PCJ
	1/9	R88G-VRSF09C400PCJ
	1/15	R88G-VRSF15C400PCJ
	1/25	R88G-VRSF25C400PCJ

● Accessories and Cables

• Servomotor Power Cables (Standard Cables)
For Servomotor without brake

Specifications		Model
3,000-r/min Servomotors of 50 to 750 W, 3,000-r/min Flat Servomotors of 100 to 400 W	3 m	R88A-CAGA003S
	5 m	R88A-CAGA005S
	10 m	R88A-CAGA010S
	15 m	R88A-CAGA015S
	20 m	R88A-CAGA020S
	30 m	R88A-CAGA030S
	40 m	R88A-CAGA040S
	50 m	R88A-CAGA050S
3,000-r/min Servomotors of 1 to 1.5 kW, 2,000-r/min Servomotors of 1 to 1.5 kW, 1,000-r/min Servomotors of 900 W	3 m	R88A-CAGB003S
	5 m	R88A-CAGB005S
	10 m	R88A-CAGB010S
	15 m	R88A-CAGB015S
	20 m	R88A-CAGB020S
	30 m	R88A-CAGB030S
	40 m	R88A-CAGB040S
	50 m	R88A-CAGB050S
3,000-r/min Servomotors of 2 kW, 2,000-r/min Servomotors of 2 kW	3 m	R88A-CAGC003S
	5 m	R88A-CAGC005S
	10 m	R88A-CAGC010S
	15 m	R88A-CAGC015S
	20 m	R88A-CAGC020S
	30 m	R88A-CAGC030S
	40 m	R88A-CAGC040S
	50 m	R88A-CAGC050S
3,000-r/min Servomotors of 3 to 5 kW, 2,000-r/min Servomotors of 3 to 5 kW, 1,000-r/min Servomotors of 2 to 4.5 kW	3 m	R88A-CAGD003S
	5 m	R88A-CAGD005S
	10 m	R88A-CAGD010S
	15 m	R88A-CAGD015S
	20 m	R88A-CAGD020S
	30 m	R88A-CAGD030S
	40 m	R88A-CAGD040S
	50 m	R88A-CAGD050S
1,500-r/min Servomotors of 7.5 kW, 1,000-r/min Servomotors of 6 kW	3 m	R88A-CAGE003S
	5 m	R88A-CAGE005S
	10 m	R88A-CAGE010S
	15 m	R88A-CAGE015S
	20 m	R88A-CAGE020S
	30 m	R88A-CAGE030S
	40 m	R88A-CAGE040S
	50 m	R88A-CAGE050S

Note: There are separate connectors for power and brakes for 3,000-r/min Servomotors of 50 to 750 W, Flat Servomotors, and Servomotors of 6 kW or higher. When a Servomotor with a brake is used, it is necessary to use both a Power Cable for Servomotors without brakes and a Power Cable.

• Servomotor Power Cables (Standard Cables)
For Servomotor with brake

Specifications		Model
3,000-r/min Servomotors of 1 to 1.5 kW, 2,000-r/min Servomotors of 1 to 1.5 kW, 1,000-r/min Servomotors of 900 W	3 m	R88A-CAGB003B
	5 m	R88A-CAGB005B
	10 m	R88A-CAGB010B
	15 m	R88A-CAGB015B
	20 m	R88A-CAGB020B
	30 m	R88A-CAGB030B
	40 m	R88A-CAGB040B
	50 m	R88A-CAGB050B
3,000-r/min Servomotors of 2 kW, 2,000-r/min Servomotors of 2 kW	3 m	R88A-CAGC003B
	5 m	R88A-CAGC005B
	10 m	R88A-CAGC010B
	15 m	R88A-CAGC015B
	20 m	R88A-CAGC020B
	30 m	R88A-CAGC030B
	40 m	R88A-CAGC040B
	50 m	R88A-CAGC050B
3,000-r/min Servomotors of 3 to 5 kW, 2,000-r/min Servomotors of 3 to 5 kW, 1,000-r/min Servomotors of 2 to 4.5 kW	3 m	R88A-CAGD003B
	5 m	R88A-CAGD005B
	10 m	R88A-CAGD010B
	15 m	R88A-CAGD015B
	20 m	R88A-CAGD020B
	30 m	R88A-CAGD030B
	40 m	R88A-CAGD040B
	50 m	R88A-CAGD050B

• Brake Cables (Standard Cables)

Specifications		Model
3,000-r/min Servomotors of 50 to 750 W, 3,000-r/min Flat Servomotors of 100 to 400 W	3 m	R88A-CAGA003B
	5 m	R88A-CAGA005B
	10 m	R88A-CAGA010B
	15 m	R88A-CAGA015B
	20 m	R88A-CAGA020B
	30 m	R88A-CAGA030B
	40 m	R88A-CAGA040B
	50 m	R88A-CAGA050B
1,500-r/min Servomotors of 7.5 kW, 1,000-r/min Servomotors of 6 kW	3 m	R88A-CAGE003B
	5 m	R88A-CAGE005B
	10 m	R88A-CAGE010B
	15 m	R88A-CAGE015B
	20 m	R88A-CAGE020B
	30 m	R88A-CAGE030B
	40 m	R88A-CAGE040B
	50 m	R88A-CAGE050B

• Encoder Cables (Standard Cables)

Specifications		Model
3,000-r/min Servomotors of 50 to 750 W with an absolute encoder, 3,000-r/min Flat Servomotors of 100 to 400 W with an absolute encoder	3 m	**R88A-CRGA003C**
	5 m	**R88A-CRGA005C**
	10 m	**R88A-CRGA010C**
	15 m	**R88A-CRGA015C**
	20 m	**R88A-CRGA020C**
	30 m	**R88A-CRGA030C**
	40 m	**R88A-CRGA040C**
	50 m	**R88A-CRGA050C**
3,000-r/min Servomotors of 50 to 750 W with an incremental encoder, 3,000-r/min Flat Servomotors of 100 to 400 W with an incremental encoder	3 m	**R88A-CRGB003C**
	5 m	**R88A-CRGB005C**
	10 m	**R88A-CRGB010C**
	15 m	**R88A-CRGB015C**
	20 m	**R88A-CRGB020C**
	30 m	**R88A-CRGB030C**
	40 m	**R88A-CRGB040C**
	50 m	**R88A-CRGB050C**
3,000-r/min Servomotors of 1 to 5 kW, 2,000-r/min Servomotors of 1 to 5 kW, 1,500-r/min Servomotors of 7.5 kW, 1,000-r/min Servomotors of 900 W to 6 kW	3 m	**R88A-CRGC003N**
	5 m	**R88A-CRGC005N**
	10 m	**R88A-CRGC010N**
	15 m	**R88A-CRGC015N**
	20 m	**R88A-CRGC020N**
	30 m	**R88A-CRGC030N**
	40 m	**R88A-CRGC040N**
	50 m	**R88A-CRGC050N**

• Absolute Encoder Battery Cable

Specifications		Model
Absolute Encoder Battery Cable (Battery not included.)	0.3 m	**R88A-CRGD0R3C**
Absolute Encoder Battery Cable (One R88A-BAT01G Battery included.)	0.3 m	**R88A-CRGD0R3C-BS**

• Absolute Encoder Backup Battery

Specifications	Model
2,000 mA·h 3.6 V	**R88A-BAT01G**

• Servomotor Power Cables (Robot Cables)

For Servomotor without brake

Specifications		Model
3,000-r/min Servomotors of 50 to 750 W, 3,000-r/min Flat Servomotors of 100 to 400 W	3 m	**R88A-CAGA003SR**
	5 m	**R88A-CAGA005SR**
	10 m	**R88A-CAGA010SR**
	15 m	**R88A-CAGA015SR**
	20 m	**R88A-CAGA020SR**
	30 m	**R88A-CAGA030SR**
	40 m	**R88A-CAGA040SR**
	50 m	**R88A-CAGA050SR**
3,000-r/min Servomotors of 1 to 1.5 kW, 2,000-r/min Servomotors of 1 to 1.5 kW, 1,000-r/min Servomotors of 900 W	3 m	**R88A-CAGB003SR**
	5 m	**R88A-CAGB005SR**
	10 m	**R88A-CAGB010SR**
	15 m	**R88A-CAGB015SR**
	20 m	**R88A-CAGB020SR**
	30 m	**R88A-CAGB030SR**
	40 m	**R88A-CAGB040SR**
	50 m	**R88A-CAGB050SR**
3,000-r/min Servomotors of 2 kW, 2,000-r/min Servomotors of 2 kW	3 m	**R88A-CAGC003SR**
	5 m	**R88A-CAGC005SR**
	10 m	**R88A-CAGC010SR**
	15 m	**R88A-CAGC015SR**
	20 m	**R88A-CAGC020SR**
	30 m	**R88A-CAGC030SR**
	40 m	**R88A-CAGC040SR**
	50 m	**R88A-CAGC050SR**
3,000-r/min Servomotors of 3 to 5 kW, 2,000-r/min Servomotors of 3 to 5 kW, 1,000-r/min Servomotors of 2 to 4.5 kW	3 m	**R88A-CAGD003SR**
	5 m	**R88A-CAGD005SR**
	10 m	**R88A-CAGD010SR**
	15 m	**R88A-CAGD015SR**
	20 m	**R88A-CAGD020SR**
	30 m	**R88A-CAGD030SR**
	40 m	**R88A-CAGD040SR**
	50 m	**R88A-CAGD050SR**

• Servomotor Power Cables (Robot Cables)
For Servomotor with brake

Specifications		Model
3,000-r/min Servomotors of 1 to 1.5 kW, 2,000-r/min Servomotors of 1 to 1.5 kW, 1,000-r/min Servomotors of 900 W	3 m	**R88A-CAGB003BR**
	5 m	**R88A-CAGB005BR**
	10 m	**R88A-CAGB010BR**
	15 m	**R88A-CAGB015BR**
	20 m	**R88A-CAGB020BR**
	30 m	**R88A-CAGB030BR**
	40 m	**R88A-CAGB040BR**
	50 m	**R88A-CAGB050BR**
3,000-r/min Servomotors of 2 kW, 2,000-r/min Servomotors of 2 kW	3 m	**R88A-CAGC003BR**
	5 m	**R88A-CAGC005BR**
	10 m	**R88A-CAGC010BR**
	15 m	**R88A-CAGC015BR**
	20 m	**R88A-CAGC020BR**
	30 m	**R88A-CAGC030BR**
	40 m	**R88A-CAGC040BR**
	50 m	**R88A-CAGC050BR**
3,000-r/min Servomotors of 3 to 5 kW, 2,000-r/min Servomotors of 3 to 5 kW, 1,000-r/min Servomotors of 2 to 4.5 kW	3 m	**R88A-CAGD003BR**
	5 m	**R88A-CAGD005BR**
	10 m	**R88A-CAGD010BR**
	15 m	**R88A-CAGD015BR**
	20 m	**R88A-CAGD020BR**
	30 m	**R88A-CAGD030BR**
	40 m	**R88A-CAGD040BR**
	50 m	**R88A-CAGD050BR**

• Brake Cables (Robot Cables)

Specifications		Model
3,000-r/min Servomotors of 50 to 750 W, 3,000-r/min Flat Servomotors of 100 to 400 W	3 m	**R88A-CAGA003BR**
	5 m	**R88A-CAGA005BR**
	10 m	**R88A-CAGA010BR**
	15 m	**R88A-CAGA015BR**
	20 m	**R88A-CAGA020BR**
	30 m	**R88A-CAGA030BR**
	40 m	**R88A-CAGA040BR**
	50 m	**R88A-CAGA050BR**

• Encoder Cables (Robot Cables)

Specifications		Model
3,000-r/min Servomotors of 50 to 750 W with an absolute encoder, 3,000-r/min Flat Servomotors of 100 to 400 W with an absolute encoder	3 m	**R88A-CRGA003CR**
	5 m	**R88A-CRGA005CR**
	10 m	**R88A-CRGA010CR**
	15 m	**R88A-CRGA015CR**
	20 m	**R88A-CRGA020CR**
	30 m	**R88A-CRGA030CR**
	40 m	**R88A-CRGA040CR**
	50 m	**R88A-CRGA050CR**
3,000-r/min Servomotors of 50 to 750 W with an incremental encoder, 3,000-r/min Flat Servomotors of 100 to 400 W with an incremental encoder	3 m	**R88A-CRGB003CR**
	5 m	**R88A-CRGB005CR**
	10 m	**R88A-CRGB010CR**
	15 m	**R88A-CRGB015CR**
	20 m	**R88A-CRGB020CR**
	30 m	**R88A-CRGB030CR**
	40 m	**R88A-CRGB040CR**
	50 m	**R88A-CRGB050CR**
3,000-r/min Servomotors of 1 to 5 kW, 2,000-r/min Servomotors of 1 to 5 kW, 1,500-r/min Servomotors of 7.5 kW, 1,000-r/min Servomotors of 900 W to 6 kW	3 m	**R88A-CRGC003NR**
	5 m	**R88A-CRGC005NR**
	10 m	**R88A-CRGC010NR**
	15 m	**R88A-CRGC015NR**
	20 m	**R88A-CRGC020NR**
	30 m	**R88A-CRGC030NR**
	40 m	**R88A-CRGC040NR**
	50 m	**R88A-CRGC050NR**

• Communications Cables

Specifications		Model
RS-232 Communications Cable (Personal Computer Monitor Cable)	2 m	**R88A-CCG002P2**

• Connectors

Specifications		Model
Servomotor Connector for Encoder Cable	Absolute Encoder	**R88A-CNG01R**
	Incremental Encoder	**R88A-CNG02R**
Control I/O Connector (CN1)		**R88A-CNU01C**
Encoder Connector (CN2)		**R88A-CNW01R**
Power Cable Connector (750 W max.)		**R88A-CNG01A**
Brake Cable Connector (750 W max.)		**R88A-CNG01B**

• Control Cables

Specifications		Model
Connector Terminal Block Cables	1 m	**XW2Z-100J-B33**
	2 m	**XW2Z-200J-B33**
Connector Terminal Block	M3 screw type	**XW2B-20G4**
	M3.5 screw type	**XW2B-20G5**
	M3 screw type	**XW2D-20G6**

• External Regeneration Resistors

Specifications	Model
20 W, 50 Ω	**R88A-RR08050S**
20 W, 100 Ω	**R88A-RR080100S**
70 W, 47 Ω	**R88A-RR22047S1**
500 W, 20 Ω	**R88A-RR50020S**

• Reactors

Specifications	Model
R88D-GNA5L-ML2/-GN01H-ML2	**3G3AX-DL2002**
R88D-GN01L-ML2/-GN02H-ML2	**3G3AX-DL2004**
R88D-GN02L-ML2/-GN04H-ML2	**3G3AX-DL2007**
R88D-GN04L-ML2/-GN08H-ML2/-GT10H-ML2	**3G3AX-DL2015**
R88D-GN15H-ML2	**3G3AX-DL2022**
R88D-GN08H-ML2/-GN10H-ML2/-GN15H-ML2	**3G3AX-AL2025**
R88D-GN20H-ML2/-GN30H-ML2	**3G3AX-AL2055**
R88D-GN50H-ML2	**3G3AX-AL2110**
R88D-GN75H-ML2	**3G3AX-AL2220**

• Mounting Brackets (L Brackets for Rack Mounting)

Specifications	Model
R88D-GNA5L-ML2/-GN01L-ML2/-GN01H-ML2/-GN02H-ML2	**R88A-TK01G**
R88D-GN02L-ML2/-GN04H-ML2	**R88A-TK02G**
R88D-GN04L-ML2/-GN08H-ML2	**R88A-TK03G**
R88D-GN10H-ML2/-GN15H-ML2	**R88A-TK04G**

• Parameter Unit

Specifications	Model
Parameter Unit	**R88A-PR02G**

• MECHATROLINK-related Devices and Cables (Manufactured by Yaskawa Corporation)

Name		OMRON model number	Yaskawa model number
MECHATROLINK-II Cables (without ring core and USB connector on both ends) Can be connected to R88D-GN and R88D-KN only.	0.5 m	**FNY-W6002-A5**	**JEPMC-W6002-A5-E**
	1.0 m	**FNY-W6002-01**	**JEPMC-W6002-01-E**
	3.0 m	**FNY-W6002-03**	**JEPMC-W6002-03-E**
	5.0 m	**FNY-W6002-05**	**JEPMC-W6002-05-E**
MECHATROLINK-II Cables (with ring core and USB connector on both ends)	0.5 m	**FNY-W6003-A5**	**JEPMC-W6003-A5**
	1.0 m	**FNY-W6003-01**	**JEPMC-W6003-01**
	3.0 m	**FNY-W6003-03**	**JEPMC-W6003-03**
	5.0 m	**FNY-W6003-05**	**JEPMC-W6003-05**
	10.0 m	**FNY-W6003-10**	**JEPMC-W6003-10**
	20.0 m	**FNY-W6003-20**	**JEPMC-W6003-20**
	30.0 m	**FNY-W6003-30**	**JEPMC-W6003-30**
MECHATROLINK-II Terminating Resistor	Terminating resistance	**FNY-W6022**	**JEPMC-W6022**
MECHATROLINK-II Repeater	Communications Repeater	**FNY-REP2000**	**JEPMC-REP2000**

Note: MECHATROLINK-related Devices and Cables are manufactured by Yaskawa Corporation, but they can be ordered directly from OMRON using the OMRON model numbers. (Yaskawa-brand products will be delivered even when they are ordered from OMRON.)

Servo Drive-Servomotor Combinations

Only the Servomotor and Servo Drive combinations listed here can be used. Do not use other combinations.

● 3,000-r/min Sylindrical Servomotors and Servo Drives

Voltage	Servo Drive	Servomotor		
		Rated output	With incremental encoder	With absolute encoder
100 V	R88D-GNA5L-ML2	50 W	R88M-G05030H-□	R88M-G05030T-□
	R88D-GN01L-ML2	100 W	R88M-G10030L-□	R88M-G10030S-□
	R88D-GN02L-ML2	200 W	R88M-G20030L-□	R88M-G20030S-□
	R88D-GN04L-ML2	400 W	R88M-G40030L-□	R88M-G40030S-□
Single-phase 200 V	R88D-GN01H-ML2	50 W	R88M-G05030H-□	R88M-G05030T-□
	R88D-GN01H-ML2	100 W	R88M-G10030H-□	R88M-G10030T-□
	R88D-GN02H-ML2	200 W	R88M-G20030H-□	R88M-G20030T-□
	R88D-GN04H-ML2	400 W	R88M-G40030H-□	R88M-G40030T-□
Single-phase/ three-phase 200 V	R88D-GN08H-ML2	750 W	R88M-G75030H-□	R88M-G75030T-□
	R88D-GN15H-ML2	1 kW	–	R88M-G1K030T-□
	R88D-GN15H-ML2	1.5 kW	–	R88M-G1K530T-□
Three-phase 200 V	R88D-GN20H-ML2	2 kW	–	R88M-G2K030T-□
	R88D-GN30H-ML2	3 kW	–	R88M-G3K030T-□
	R88D-GN50H-ML2	4 kW	–	R88M-G4K030T-□
	R88D-GN50H-ML2	5 kW	–	R88M-G5K030T-□

● 3,000-r/min Flat Servomotors and Servo Drives

Voltage	Servo Drive	Servomotor		
		Rated output	With incremental encoder	With absolute encoder
100 V	R88D-GN01L-ML2	100 W	R88M-GP10030L-□	R88M-GP10030S-□
	R88D-GN02L-ML2	200 W	R88M-GP20030L-□	R88M-GP20030S-□
	R88D-GN04L-ML2	400 W	R88M-GP40030L-□	R88M-GP40030S-□
Single-phase 200 V	R88D-GN01H-ML2	100 W	R88M-GP10030H-□	R88M-GP10030T-□
	R88D-GN02H-ML2	200 W	R88M-GP20030H-□	R88M-GP20030T-□
	R88D-GN04H-ML2	400 W	R88M-GP40030H-□	R88M-GP40030T-□

● 2,000-r/min Sylindrical Servomotors and Servo Drives

Voltage	Servo Drive	Servomotor	
		Rated output	With absolute encoder
Single-phase/ three-phase 200 V	R88D-GN10H-ML2	1 kW	R88M-G1K020T-□
	R88D-GN15H-ML2	1.5 kW	R88M-G1K520T-□
Three-phase 200 V	R88D-GN20H-ML2	2 kW	R88M-G2K020T-□
	R88D-GN30H-ML2	3 kW	R88M-G3K020T-□
	R88D-GN50H-ML2	4 kW	R88M-G4K020T-□
	R88D-GN50H-ML2	5 kW	R88M-G5K020T-□
	R88D-GN75H-ML2	7.5 kW	R88M-G7K515T-□

● 1,000-r/min Sylindrical Servomotors and Servo Drives

Voltage	Servo Drive	Servomotor	
		Rated output	With absolute encoder
Single-phase/ three-phase 200 V	R88D-GN15H-ML2	900 W	R88M-G90010T-□
Three-phase 200 V	R88D-GN30H-ML2	2 kW	R88M-G2K010T-□
	R88D-GN50H-ML2	3 kW	R88M-G3K010T-□
	R88D-GN50H-ML2	4.5 kW	R88M-G4K510T-□
	R88D-GN75H-ML2	6 kW	R88M-G6K010T-□

Servomotor and Decelerator Combinations

● 3,000-r/min Cylindrical Servomotors

Motor model	1/5	1/11 (1/9 for flange size No.11)	1/21	1/33	1/45
R88M-G05030□	R88G-HPG11A05100B□ (Also used with R88M-G10030□)	R88G-HPG11A09050B□ (Gear ratio 1/9)	R88G-HPG14A21100B□ (Also used with R88M-G10030□)	R88G-HPG14A33050B□	R88G-HPG14A45050B□
R88M-G10030□	R88G-HPG11A05100B□	R88G-HPG14A11100B□	R88G-HPG14A21100B□	R88G-HPG20A33100B□	R88G-HPG20A45100B□
R88M-G20030□	R88G-HPG14A05200B□	R88G-HPG14A11200B□	R88G-HPG20A21200B□	R88G-HPG20A33200B□	R88G-HPG20A45200B□
R88M-G40030□	R88G-HPG14A05400B□	R88G-HPG20A11400B□	R88G-HPG20A21400B□	R88G-HPG32A33400B□	R88G-HPG32A45400B□
R88M-G75030□	R88G-HPG20A05750B□	R88G-HPG20A11750B□	R88G-HPG32A21750B□	R88G-HPG32A33750B□	R88G-HPG32A45750B□
R88M-G1K030T	R88G-HPG32A051K0B□	R88G-HPG32A111K0B□	R88G-HPG32A211K0B□	R88G-HPG32A331K0B□	R88G-HPG50A451K0B□
R88M-G1K530T	R88G-HPG32A052K0B□ (Also used with R88M-G2K030T)	R88G-HPG32A112K0B□ (Also used with R88M-G2K030T)	R88G-HPG32A211K5B□	R88G-HPG50A332K0B□ (Also used with R88M-G2K030T)	R88G-HPG50A451K5B□
R88M-G2K030T	R88G-HPG32A052K0B□	R88G-HPG32A112K0B□	R88G-HPG50A212K0B□	R88G-HPG50A332K0B□	–
R88M-G3K030T	R88G-HPG32A053K0B□	R88G-HPG50A113K0B□	R88G-HPG50A213K0B□	–	–
R88M-G4K030T	R88G-HPG32A054K0B□	R88G-HPG50A115K0B□ (Also used with R88M-G5K030T)	–	–	–
R88M-G5K030T	R88G-HPG50A055K0B□	R88G-HPG50A115K0B□	–	–	–

● 3,000-r/min Flat Servomotors

Motor model	1/5	1/11	1/21	1/33	1/45
R88M-GP10030□	R88G-HPG11A05100PB□	R88G-HPG14A11100PB□	R88G-HPG14A21100PB□	R88G-HPG20A33100PB□	R88G-HPG20A45100PB□
R88M-GP20030□	R88G-HPG14A05200PB□	R88G-HPG20A11200PB□	R88G-HPG20A21200PB□	R88G-HPG20A33200PB□	R88G-HPG20A45200PB□
R88M-GP40030□	R88G-HPG20A05400PB□	R88G-HPG20A11400PB□	R88G-HPG20A21400PB□	R88G-HPG32A33400PB□	R88G-HPG32A45400PB□

● 2,000-r/min Cylindrical Servomotors

Motor model	1/5	1/11 (1/12 for flange size No.65)	1/21 (1/20 for flange size No.65)	1/33 (1/25 for flange size No.65)	1/45
R88M-G1K020T	R88G-HPG32A053K0B□ (Also used with R88M-G3K030T)	R88G-HPG32A112K0SB□ (Also used with R88M-G2K020T)	R88G-HPG32A211K0SB□	R88G-HPG50A332K0SB□ (Also used with R88M-G2K020T)	R88G-HPG50A451K0SB□
R88M-G1K520T	R88G-HPG32A053K0B□ (Also used with R88M-G3K030T)	R88G-HPG32A112K0SB□ (Also used with R88M-G2K020T)	R88G-HPG50A213K0B□ (Also used with R88M-G3K030T)	R88G-HPG50A332K0SB□ (Also used with R88M-G2K020T)	–
R88M-G2K020T	R88G-HPG32A053K0B□ (Also used with R88M-G3K030T)	R88G-HPG32A112K0SB□	R88G-HPG50A213K0B□ (Also used with R88M-G3K030T)	R88G-HPG50A332K0SB□	–
R88M-G3K020T	R88G-HPG32A054K0B□ (Also used with R88M-G4K030T)	R88G-HPG50A115K0B□ (Also used with R88M-G5K030T)	R88G-HPG50A213K0SB□	R88G-HPG65A253K0SB□	–
R88M-G4K020T	R88G-HPG50A054K0SB□	R88G-HPG50A114K0SB□	R88G-HPG65A204K0SB□	R88G-HPG65A254K0SB□	–
R88M-G5K020T	R88G-HPG50A055K0SB□	R88G-HPG50A115K0SB□	R88G-HPG65A205K0SB□	R88G-HPG65A255K0SB□	–
R88M-G7K515T	R88G-HPG65A057K5SB□	R88G-HPG65A127K5SB□	–	–	–

● 1,000-r/min Cylindrical Servomotors

Motor model	1/5	1/11 (1/12 for flange size No.65)	1/21 (1/20 for flange size No.65)	1/33 (1/25 for flange size No.65)
R88M-G90010T	R88G-HPG32A05900TB□	R88G-HPG32A11900TB□	R88G-HPG50A21900TB□	R88G-HPG50A33900TB□
R88M-G2K010T	R88G-HPG32A052K0TB□	R88G-HPG50A112K0TB□	R88G-HPG50A212K0TB□	R88G-HPG65A255K0SB□ (Also used with R88M-G5K020T)
R88M-G3K010T	R88G-HPG50A055K0SB□ (Also used with R88M-G5K020T)	R88G-HPG50A115K0SB□ (Also used with R88M-G5K020T)	R88G-HPG65A205K0SB□ (Also used with R88M-G5K020T)	R88G-HPG65A255K0SB□ (Also used with R88M-G5K020T)
R88M-G4K510T	R88G-HPG50A054K5TB□	R88G-HPG65A127K5SB□ (Also used with R88M-G7K515T)	R88G-HPG65A204K5TB□	–
R88M-G6K010T	R88G-HPG65A057K5SB□ (Also used with R88M-G7K515T)	R88G-HPG65A127K5SB□ (Also used with R88M-G7K515T)	–	–

Cable Combinations

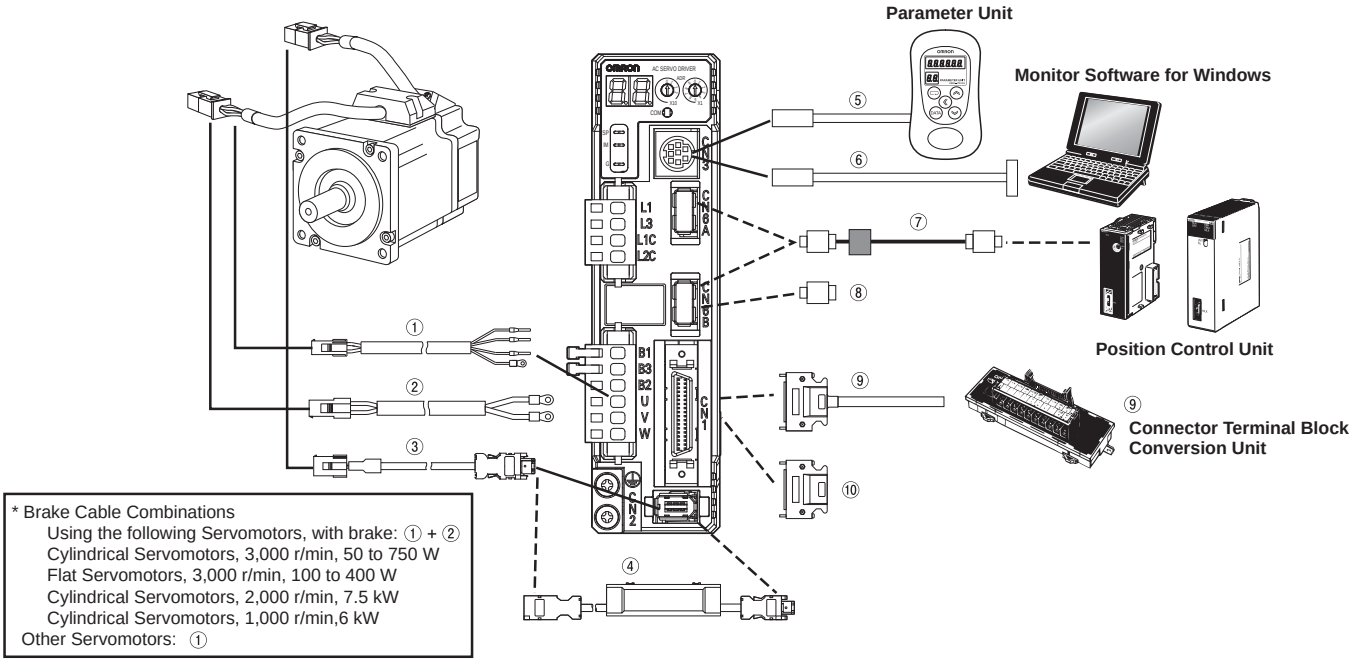

* Brake Cable Combinations
Using the following Servomotors, with brake: ① + ②
Cylindrical Servomotors, 3,000 r/min, 50 to 750 W
Flat Servomotors, 3,000 r/min, 100 to 400 W
Cylindrical Servomotors, 2,000 r/min, 7.5 kW
Cylindrical Servomotors, 1,000 r/min,6 kW
Other Servomotors: ①

● Power Supply Cables (for CNB) (SR Connection Cables)

Symbol	Name	Connected to	Model	Description
①	Standard Servomotor Power Cables for Servomotors without Brakes	Cylindrical Servomotors, 3,000 r/min, 50 to 750 W Flat Servomotors, 3,000 r/min, 100 to 400 W	R88A-CAGA□□□S The empty boxes in the model number are for the cable length. The cable can be 3, 5, 10, 15, 20, 30, 40, or 50 m long.	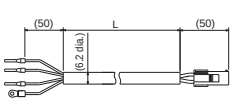 **[Servomotor Connector]** Connector: 172159-1 (Tyco Electronics AMP KK) Connector pins: 170362-1 (Tyco Electronics AMP KK) 170366-1 (Tyco Electronics AMP KK)
		Cylindrical Servomotors, 3,000 r/min, 1 to 1.5 kW Cylindrical Servomotors, 2,000 r/min, 1 to 1.5 kW Cylindrical Servomotors, 1,000 r/min, 900 W	R88A-CAGB□□□S The empty boxes in the model number are for the cable length. The cable can be 3, 5, 10, 15, 20, 30, 40, or 50 m long.	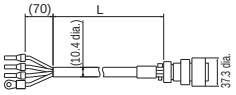 **[Servomotor Connector]** Straight plug: N/MS3106B20-4S (Japan Aviation Electronics Industry, Ltd.) Cable clamp: N/MS3057-12A (Japan Aviation Electronics Industry, Ltd.)
		Cylindrical Servomotors, 3,000 r/min, 2 kW Cylindrical Servomotors, 2,000 r/min, 2 kW	R88A-CAGC□□□S The empty boxes in the model number are for the cable length. The cable can be 3, 5, 10, 15, 20, 30, 40, or 50 m long.	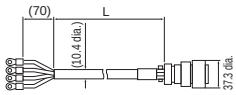 **[Servomotor Connector]** Straight plug: N/MS3106B20-4S (Japan Aviation Electronics Industry, Ltd.) Cable clamp: N/MS3057-12A (Japan Aviation Electronics Industry, Ltd.)
		Cylindrical Servomotors, 3,000 r/min, 3 to 5 kW Cylindrical Servomotors, 2,000 r/min, 3 to 5 kW Cylindrical Servomotors, 1,000 r/min, 2 to 4.5 kW	R88A-CAGD□□□S The empty boxes in the model number are for the cable length. The cable can be 3, 5, 10, 15, 20, 30, 40, or 50 m long.	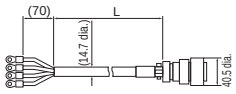 **[Servomotor Connector]** Straight plug: N/MS3106B22-22S (Japan Aviation Electronics Industry, Ltd.) Cable clamp: N/MS3057-12A (Japan Aviation Electronics Industry, Ltd.)
		Cylindrical Servomotors, 1,500 r/min, 7.5 kW Cylindrical Servomotors, 1,000 r/min, 6 kW	R88A-CAGE□□□S The empty boxes in the model number are for the cable length. The cable can be 3, 5, 10, 15, 20, 30, 40, or 50 m long.	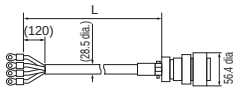 **[Servomotor Connector]** Straight plug: N/MS3106B32-17S (Japan Aviation Electronics Industry, Ltd.) Cable clamp: N/MS3057-20A (Japan Aviation Electronics Industry, Ltd.)

Symbol	Name	Connected to	Model	Description
①	Standard Servomotor Power Cables for Servomotors with Brakes	Cylindrical Servomotors, 3,000 r/min, 1 to 1.5 kW Cylindrical Servomotors, 2,000 r/min, 1 to 1.5 kW Cylindrical Servomotors, 1,000 r/min, 900 W	R88A-CAGB□□□B The empty boxes in the model number are for the cable length. The cable can be 3, 5, 10, 15, 20, 30, 40, or 50 m long.	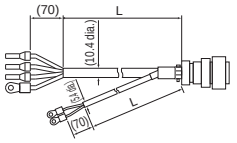 **[Servomotor Connector]** Straight plug: N/MS3106B20-18S (Japan Aviation Electronics Industry, Ltd.) Cable clamp: N/MS3057-12A (Japan Aviation Electronics Industry, Ltd.)
		Cylindrical Servomotors, 3,000 r/min, 2 kW Cylindrical Servomotors, 2,000 r/min, 2 kW	R88A-CAGC□□□B The empty boxes in the model number are for the cable length. The cable can be 3, 5, 10, 15, 20, 30, 40, or 50 m long.	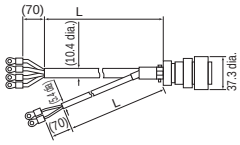 **[Servomotor Connector]** Straight plug: N/MS3106B20-18S (Japan Aviation Electronics Industry, Ltd.) Cable clamp: N/MS3057-12A (Japan Aviation Electronics Industry, Ltd.)
		Cylindrical Servomotors, 3,000 r/min, 3 to 5 kW Cylindrical Servomotors, 2,000 r/min, 3 to 5 kW Cylindrical Servomotors, 1,000 r/min, 2 to 4.5 kW	R88A-CAGD□□□B The empty boxes in the model number are for the cable length. The cable can be 3, 5, 10, 15, 20, 30, 40, or 50 m long.	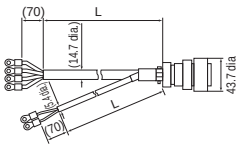 **[Servomotor Connector]** Straight plug: N/MS3106B24-11S (Japan Aviation Electronics Industry, Ltd.) Cable clamp: N/MS3057-16A (Japan Aviation Electronics Industry, Ltd.)
	Robot Servomotor Power Cables for Servomotors without Brakes	Cylindrical Servomotors, 3,000 r/min, 50 to 750 W Flat Servomotors, 3,000 r/min, 100 to 400 W	R88A-CAGA□□□SR The empty boxes in the model number are for the cable length. The cable can be 3, 5, 10, 15, 20, 30, 40, or 50 m long.	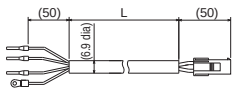 **[Servomotor Connector]** Connector: 172159-1 (Tyco Electronics AMP KK) Connector pins: 170362-1 (Tyco Electronics AMP KK) 170366-1 (Tyco Electronics AMP KK)
		Cylindrical Servomotors, 3,000 r/min, 1 to 1.5 kW Cylindrical Servomotors, 2,000 r/min, 1 to 1.5 kW Cylindrical Servomotors, 1,000 r/min, 900 W	R88A-CAGB□□□SR The empty boxes in the model number are for the cable length. The cable can be 3, 5, 10, 15, 20, 30, 40, or 50 m long.	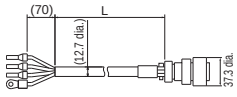 **[Servomotor Connector]** Straight plug: N/MS3106B20-4S (Japan Aviation Electronics Industry, Ltd.) Cable clamp: N/MS3057-12A (Japan Aviation Electronics Industry, Ltd.)
		Cylindrical Servomotors, 3,000 r/min, 2 kW Cylindrical Servomotors, 2,000 r/min, 2 kW	R88A-CAGC□□□SR The empty boxes in the model number are for the cable length. The cable can be 3, 5, 10, 15, 20, 30, 40, or 50 m long.	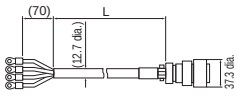 **[Servomotor Connector]** Straight plug: N/MS3106B20-4S (Japan Aviation Electronics Industry, Ltd.) Cable clamp: N/MS3057-12A (Japan Aviation Electronics Industry, Ltd.)
		Cylindrical Servomotors, 3,000 r/min, 3 to 5 kW Cylindrical Servomotors, 2,000 r/min, 3 to 5 kW Cylindrical Servomotors, 1,000 r/min, 2 to 4.5 kW	R88A-CAGD□□□SR The empty boxes in the model number are for the cable length. The cable can be 3, 5, 10, 15, 20, 30, 40, or 50 m long.	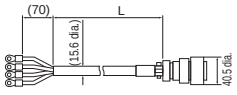 **[Servomotor Connector]** Straight plug: N/MS3106B22-22S (Japan Aviation Electronics Industry, Ltd.) Cable clamp: N/MS3057-12A (Japan Aviation Electronics Industry, Ltd.)
	Robot Servomotor Power Cables for Servomotors with Brakes	Cylindrical Servomotors, 3,000 r/min, 1 to 1.5 kW Cylindrical Servomotors, 2,000 r/min, 1 to 1.5 kW Cylindrical Servomotors, 1,000 r/min, 900 W	R88A-CAGB□□□BR The empty boxes in the model number are for the cable length. The cable can be 3, 5, 10, 15, 20, 30, 40, or 50 m long.	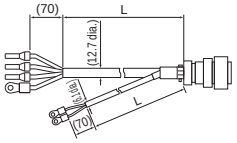 **[Servomotor Connector]** Straight plug: N/MS3106B20-18S (Japan Aviation Electronics Industry, Ltd.) Cable clamp: N/MS3057-12A (Japan Aviation Electronics Industry, Ltd.)
		Cylindrical Servomotors, 3,000 r/min, 2 kW Cylindrical Servomotors, 2,000 r/min, 2 kW	R88A-CAGC□□□BR The empty boxes in the model number are for the cable length. The cable can be 3, 5, 10, 15, 20, 30, 40, or 50 m long.	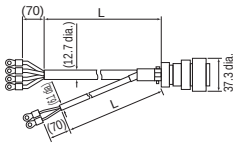 **[Servomotor Connector]** Straight plug: N/MS3106B20-18S (Japan Aviation Electronics Industry, Ltd.) Cable clamp: N/MS3057-12A (Japan Aviation Electronics Industry, Ltd.)
		Cylindrical Servomotors, 3,000 r/min, 3 to 5 kW Cylindrical Servomotors, 2,000 r/min, 3 to 5 kW Cylindrical Servomotors, 1,000 r/min, 2 to 4.5 kW	R88A-CAGD□□□BR The empty boxes in the model number are for the cable length. The cable can be 3, 5, 10, 15, 20, 30, 40, or 50 m long.	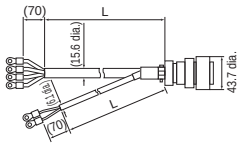 **[Servomotor Connector]** Straight plug: N/MS3106B24-11S (Japan Aviation Electronics Industry, Ltd.) Cable clamp: N/MS3057-16A (Japan Aviation Electronics Industry, Ltd.)

● Brake Cables

Symbol	Name	Connected to	Model	Description
②	Standard Brake Cables	Cylindrical Servomotors, 3,000 r/min, 50 to 750 W Flat Servomotors, 3,000 r/min, 100 to 400 W	R88A-CAGA□□□B The empty boxes in the model number are for the cable length. The cable can be 3, 5, 10, 15, 20, 30, 40, or 50 m long.	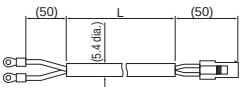 **[Servomotor Connector]** Connector: 172157-1 (Tyco Electronics AMP KK) Connector pins: 170362-1 (Tyco Electronics AMP KK) 170366-1 (Tyco Electronics AMP KK)
		Cylindrical Servomotors, 1,500 r/min, 7.5 kW Cylindrical Servomotors, 1,000 r/min, 6 kW	R88A-CAGE□□□B The empty boxes in the model number are for the cable length. The cable can be 3, 5, 10, 15, 20, 30, 40, or 50 m long.	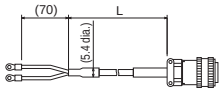 **[Servomotor Connector]** Straight plug: N/MS3106B14-2S (Japan Aviation Electronics Industry, Ltd.) Cable clamp: N/MS3057-6A (Japan Aviation Electronics Industry, Ltd.)
	Robot Brake Cables	Cylindrical Servomotors, 3,000 r/min, 50 to 750 W Flat Servomotors, 3,000 r/min, 100 to 400 W	R88A-CAGA□□□BR The empty boxes in the model number are for the cable length. The cable can be 3, 5, 10, 15, 20, 30, 40, or 50 m long.	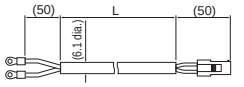 **[Servomotor Connector]** Connector: 172157-1 (Tyco Electronics AMP KK) Connector pins: 170362-1 (Tyco Electronics AMP KK) 170366-1 (Tyco Electronics AMP KK)

● Encoder Cables (for CN2)

Symbol	Name	Connected to	Model	Description
③	Standard Encoder Cables with Connectors	Cylindrical Servomotors, 3,000 r/min, 50 to 750 W, absolute encoder Flat Servomotors, 3,000 r/min, 100 to 400 W, absolute encoder	R88A-CRGA□□□C The empty boxes in the model number are for the cable length. The cable can be 3, 5, 10, 15, 20, 30, 40, or 50 m long.	**[Servo Drive Connector]** Connector: 3 to 20 m: Crimped I/O connector: (Molex Japan Co., Ltd.) 30 to 50 m: 55100-0670 (Molex Japan Co., Ltd.) Connector pins: 50639-8028 (Molex Japan Co., Ltd.) 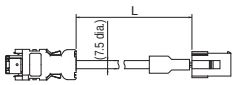 **[Servomotor Connector]** Connector: 172161-1 (Tyco Electronics AMP KK) Connector pins: 170365-1 (Tyco Electronics AMP KK) 171639-1 (Tyco Electronics AMP KK)
		Cylindrical Servomotors, 3,000 r/min, 50 to 750 W, incremental encoder Flat Servomotors, 3,000 r/min, 100 to 400 W, incremental encoder	R88A-CRGB□□□C The empty boxes in the model number are for the cable length. The cable can be 3, 5, 10, 15, 20, 30, 40, or 50 m long.	**[Servo Drive Connector]** Connector: 3 to 20 m: Crimped I/O connector: (Molex Japan Co., Ltd.) 30 to 50 m: 55100-0670 (Molex Japan Co., Ltd.) Connector pins: 50639-8028 (Molex Japan Co., Ltd.) 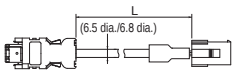 **[Servomotor Connector]** Connector: 172160-1 (Tyco Electronics AMP KK) Connector pins: 170365-1 (Tyco Electronics AMP KK) 171639-1 (Tyco Electronics AMP KK)
		Cylindrical Servomotors, 3,000 r/min,1 to 1.5 kW Cylindrical Servomotors, 2,000 r/min,1 to 5 kW Cylindrical Servomotors, 1,500 r/min, 7.5 kW Cylindrical Servomotors, 1,000 r/min, 900 W to 6 kW	R88A-CRGC□□□N The empty boxes in the model number are for the cable length. The cable can be 3, 5, 10, 15, 20, 30, 40, or 50 m long.	**[Servo Drive Connector]** Connector: 3 to 20 m: Crimped I/O connector: (Molex Japan Co., Ltd.) 30 to 50 m: 55100-0670 (Molex Japan Co., Ltd.) Connector pins: 50639-8028 (Molex Japan Co., Ltd.)  **[Servomotor Connector]** Straight plug: N/MS3106B20-29S (Japan Aviation Electronics Industry, Ltd.) Cable clamp: N/MS3057-12A (Japan Aviation Electronics Industry, Ltd.)
	Robot Encoder Cables with Connectors	Cylindrical Servomotors, 3,000 r/min,50 to 750 W, absolute encoder Flat Servomotors, 3,000 r/min, 100 to 400 W, absolute encoder	R88A-CRGA□□□CR The empty boxes in the model number are for the cable length. The cable can be 3, 5, 10, 15, 20, 30, 40, or 50 m long.	**[Servo Drive Connector]** Connector: Crimped I/O connector: (Molex Japan Co., Ltd.) Connector pins: 50639-8028 (Molex Japan Co., Ltd.) 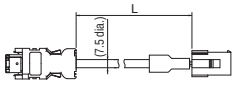 **[Servomotor Connector]** Connector: 172161-1 (Tyco Electronics AMP KK) Connector pins: 170365-1 (Tyco Electronics AMP KK)
		Cylindrical Servomotors, 3,000 r/min, 50 to 750 W, incremental encoder Flat Servomotors, 3,000 r/min, 100 to 400 W, incremental encoder	R88A-CRGB□□□CR The empty boxes in the model number are for the cable length. The cable can be 3, 5, 10, 15, 20, 30, 40, or 50 m long.	**[Servo Drive Connector]** Connector: Crimped I/O connector: (Molex Japan Co., Ltd.) Connector pins: 50639-8028 (Molex Japan Co., Ltd.) 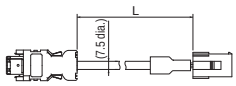 **[Servomotor Connector]** Connector: 172160-1 (Tyco Electronics AMP KK) Connector pins: 170365-1 (Tyco Electronics AMP KK)
		Cylindrical Servomotors, 3,000 r/min,1 to 1.5 kW Cylindrical Servomotors, 2,000 r/min,1 to 5 kW Cylindrical Servomotors, 1,500 r/min, 7.5 kW Cylindrical Servomotors, 1,000 r/min, 900 W to 6 kW	R88A-CRGC□□□NR The empty boxes in the model number are for the cable length. The cable can be 3, 5, 10, 15, 20, 30, 40, or 50 m long.	**[Servo Drive Connector]** Connector: Crimped I/O connector: (Molex Japan Co., Ltd.) Connector pins: 50639-8028 (Molex Japan Co., Ltd.) 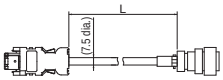 **[Servomotor Connector]** Straight plug: N/MS3106B20-29S (Japan Aviation Electronics Industry, Ltd.) Cable clamp: N/MS3057-12A (Japan Aviation Electronics Industry, Ltd.)

● Absolute Encoder Backup Battery and Absolute Encoder Battery Cable

Symbol	Name	Contents	Length (m)	Model	Description
④	Absolute Encoder Battery Cable	Battery not included.	0.3 m	R88A-CRGD0R3C	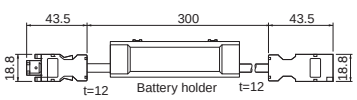
		One R88A-BAT01G Battery included.	0.3 m	R88A-CRGD0R3C-BS	
	Absolute Encoder Backup Battery	–	–	R88A-BAT01G	–

● RS-232 Communications Connector (for CN3)

Symbol	Name	Contents	Length (m)	Model
⑤	Parameter Unit	—	1.5 m	R88A-PR02G
⑥	Personal Computer Monitor Cable	for Windows RS232 Communications	2 m	R88A-CCG002P2

● MECHATROLINK-II Cable (for CN6)

Symbol	Name	Length (m)	OMRON model Number	Yasukawa model Nunber	Description
⑦	MECHATROLINK-II Communication Cable *Can be connected to R88D-GN and R88D-KN only.	0.5 m	FNY-W6002-A5	JEPMC-W6002-A5-E	(without ring core and USB connector on both ends) 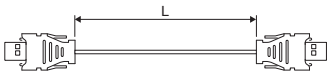
		1 m	FNY-W6002-01	JEPMC-W6002-01-E	
		3 m	FNY-W6002-03	JEPMC-W6002-03-E	
		5 m	FNY-W6002-05	JEPMC-W6002-05-E	
	MECHATROLINK-II Communication Cable	0.5 m	FNY-W6003-A5	JEPMC-W6003-A5	(without ring core and USB connector on both ends) 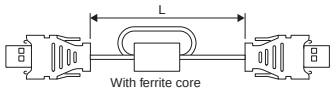
		1.0 m	FNY-W6003-01	JEPMC-W6003-01	
		3.0 m	FNY-W6003-03	JEPMC-W6003-03	
		5.0 m	FNY-W6003-05	JEPMC-W6003-05	
		10 m	FNY-W6003-10	JEPMC-W6003-10	
		20 m	FNY-W6003-20	JEPMC-W6003-20	
		30 m	FNY-W6003-30	JEPMC-W6003-30	
⑧	MECHATROLINK-II Termination resistor	—	FNY-W6022	JEPMC-W6022	—

● Control Cables (for CN1)

Symbol	Name	Connected to	Model	Description
⑨	Connector Termial Block Cables	—	XW2Z-□□□J-B33 The empty boxes in the model number are for the cable length. The cable can be 1, or 2 m long.	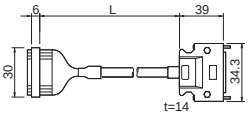
	Connector Terminal Block Conversion Unit	M3 screw type	XW2B-20G4	—
		M3.5 screw type	XW2B-20G5	
		M3 screw type	XW2D-20G6	

● Control Cables

Symbol	Name	Connected to	Model
—	Servomoteor Connector for Encoder Cable, absolute Encoder	for moter	R88A-CNG01R
—	Servomoteor Connector for Encoder Cable, Incremental Encoder	for moter	R88A-CNG02R
⑩	Control I/O Connector (CN1)	for drive	R88A-CNU01C
—	Encoder Connector (CN2)	—	R88A-CNW01R
—	Power Cable Connector (750 W max.)	—	R88A-CNG01A
—	Brake Cable Connector (750 W max.)	—	R88A-CNG01B

Servo Drive Specifications (R88D-GN□-ML2)

● General Specifications

Item			Specifications
Ambient operating temperature and humidity			0 to 55°C, 90% RH max. (with no condensation)
Ambient storage temperature and humidity			–20 to 65°C, 90% RH max. (with no condensation)
Operating and storage atmosphere			No corrosive gases
Vibration resistance			Smaller of either 10 to 60 Hz with double amplitude of 0.1 mm or acceleration of 5.88 m/s² max. in X, Y, and Z directions.
Impact resistance			Acceleration of 19.6m/s² max. 2 times each in X, Y, and Z directions
Insulation resistance			Between power supply/power line terminals and frame ground: 0.5 MΩ min. (at 500 VDC)
Dielectric strength			Between power supply/power line terminals and frame ground: 1,500 VAC for 1 min at 50/60 Hz Between each control signal and frame ground: 500 VAC for 1 min
Protective structure			Built into panel (IP10).
International standards	EC Directives	EMC Directive	EN 55011 Class A Group 1
			EN 61000-6-2, IEC 61000-4-2/-3/-4/-5/-6/-11
		Low Voltage Directive	EN 50178
	UL standards		UL 508C
	CSA standards		CSA C22.2 No.14
	Korean Radio Regulations (KC)		Certified

Note: 1. The above items reflect individual evaluation testing. The results may differ under compound conditions.
Note: 2. Always disconnect all connections to the Servo Drive before you perform insulation resistance tests on it. If you perform an insulation resistance test while the Servo Drive is connected, the Servo Drive may be damaged.
Never perform dielectric strength tests on the Servo Drive. Failure to follow this precaution may result in damaging internal elements.
Note: 3. Depending on the operating conditions, some Servo Drive parts will require maintenance.
Note: 4. The service life of the Servo Drive is 28,000 hours at an average ambient temperature of 55°C at 100% of the rated torque.

● Characteristics

Servo Drives with 100-VAC Input Power

Item				R88D-GNA5L-ML2	R88D-GN01L-ML2	R88D-GN02L-ML2	R88D-GN04L-ML2
Continuous output current (rms)				1.3 A	1.8 A	2.4 A	4.9 A
Momentary maximum output current (rms)				3.9 A	5.4 A	7.2 A	14.7 A
Input power supply	Main circuit	Power supply capacity		0.4 KVA	0.4 KVA	0.5 KVA	0.9 KVA
		Power supply voltage		Single-phase 100 to 115 VAC (85 to 127 V), 50/60 Hz			
		Rated current		1.4 A	2.2 A	3.7 A	6.6 A
	Control circuit	Power supply voltage		Single-phase 100 to 115 VAC (85 to 127 V), 50/60 Hz			
		Rated current		0.09 A	0.09 A	0.09 A	0.09 A
Heat generated	Main circuit			10.1 W	14.4 W	18.4 W	41.4 W
	Control circuit			4.4 W	4.4 W	4.4 W	4.4 W
Control method				All-digital servo			
Inverter method				IGBT-driven PWM method			
PWM frequency				12.0 kHz		6.0 kHz	
Weight				Approx. 0.8 kg	Approx. 0.8 kg	Approx. 1.1 kg	Approx. 1.5 kg
Maximum applicable motor capacity				50 W	100 W	200 W	400 W
Applicable Servomotors (R88M-)	3,000-r/min Servomotors		INC	G05030H	G10030L	G20030L	G40030L
			ABS	G05030T	G10030S	G20030S	G40030S
	3,000-r/min Flat Servomotors		INC	–	GP10030L	GP20030L	GP40030L
			ABS	–	GP10030S	GP20030S	GP40030S
	2,000-r/min Servomotors		ABS	–	–	–	–
	1,000-r/min Servomotors		ABS	–	–	–	–
Performance	Speed control range			1:5000			
	Speed variability: Load characteristic			0.01% or less at 0% to 100% (at rated speed)			
	Speed variability: Voltage characteristic			0% at ±10% of rated voltage (at rated speed)			
	Speed variability: Temperature characteristic			±0.1% or less at 0 to 50°C (at rated speed)			
	Torque control reproducibility			±3%			

Servo Drives with Single-phase 200-VAC Input Power

Item				R88D-GN01H-ML2	R88D-GN02H-ML2	R88D-GN04H-ML2	R88D-GN08H-ML2	R88D-GN10H-ML2	R88D-GN15H-ML2
Continuous output current (rms)				1.16 A	1.6 A	2.7 A	4.0 A	5.9 A	9.8 A
Momentary maximum output current (rms)				3.5 A	5.3 A	7.1 A	14.1 A	21.2 A	28.3 A
Input power supply	Main circuit	Power supply capacity		0.5 KVA	0.5 KVA	0.9 KVA	1.3 KVA	1.8 KVA	2.3 KVA
		Power supply voltage		Single-phase 200 to 240 VAC (170 to 264 V), 50/60 Hz			Single-phase or Three-phase 200 to 240 VAC (170 to 264 V), 50/60 Hz		
		Rated current		1.3 A	2.0 A	3.7 A	5.0/3.3*1A	7.5/4.1*1A	11/8.0*1A
	Control circuit	Power supply voltage		Single-phase 200 to 240 VAC (170 to 264 V), 50/60 Hz					
		Rated current		0.05 A	0.05 A	0.05 A	0.05 A	0.07 A	0.07 A
Heat generated	Main circuit			14.3 W	14.8 W	23.6 W	38.7 W	52.9 W	105.9 W
	Control circuit			4.5 W	4.5 W	4.5 W	4.3 W	6.1 W	6.1 W
PWM frequency				12.0 kHz		6.0 kHz			
Weight				Approx. 0.8 kg	Approx. 0.8 kg	Approx. 1.1 kg	Approx. 1.5 kg	Approx. 1.7 kg	Approx. 1.7 kg
Maximum applicable motor capacity				100 W	200 W	400 W	750 W	1 kW	1.5 kW
Applicable Servomotors (R88M-)	3,000-r/min Servomotors		INC	G05030H G10030H	G20030H	G40030H	G75030H	—	—
			ABS	G05030T G10030T	G20030T	G40030T	G75030T	—	G1K030T G1K530T
	3,000-r/min Flat Servomotors		INC	GP10030H	GP20030H	GP40030H	—	—	—
			ABS	GP10030T	GP20030T	GP40030T	—	—	—
	2,000-r/min Servomotors		ABS	—	—	—	—	G1K020T	G1K520T
	1,000-r/min Servomotors		ABS	—	—	—	—	—	G90010T
Control method				All-digital servo					
Inverter method				IGBT-driven PWM method					
Performance	Speed control range			1:5000					
	Speed variability: Load characteristic			0.01% or less at 0% to 100% (at rated speed)					
	Speed variability: Voltage characteristic			0% at ±10% of rated voltage (at rated speed)					
	Speed variability: Temperature characteristic			±0.1% or less at 0 to 50°C (at rated speed)					
	Torque control reproducibility			±3%					

*1. The left value is for single-phase input power and the right value is for three-phase input power.

Servo Drives with Three-phase 200-VAC Input Power

Item				R88D-GN20H-ML2	R88D-GN30H-ML2	R88D-GN50H-ML2	R88D-GN75H-ML2
Continuous output current (rms)				14.3 A	17.4 A	31.0 A	45.4 A
Momentary maximum output current (rms)				45.3 A	63.6 A	84.8 A	170.0 A
Input power supply	Main circuit	Power supply capacity		3.3 KVA	4.5 KVA	7.5 KVA	11 KVA
		Power supply voltage		Three-phase 200 to 230 VAC (170 to 253 V), 50/60 Hz			
		Rated current		10.2 A	15.2 A	23.7 A	35.0 A
	Control circuit	Power supply voltage		Single-phase 200 to 230 VAC (170 to 253 V), 50/60 Hz			
		Rated current		0.1 A	0.12 A	0.12 A	0.14 A
Heat generated	Main circuit			112.3 W	219.6 W	391.7 W	376.2 W
	Control circuit			10.7 W	13.3 W	13.3 W	13.8 W
PWM frequency				6.0 kHz			
Weight				Approx. 3.2 kg	Approx. 6.0 kg	Approx. 6.0 kg	Approx. 16.4 kg
Maximum applicable motor capacity				2 kW	3 kW	5 kW	7.5 kW
Applicable Servomotors (R88M-)	3,000-r/min Servomotors		INC	–	–	–	–
			ABS	G2K030T	G3K030T	G4K030T G5K030T	–
	3,000-r/min Flat Servomotors		INC	–	–	–	–
			ABS	–	–	–	–
	2,000-r/min Servomotors		ABS	G2K020T	G3K020T	G4K020T G5K020T	G7K515T
	1,000-r/min Servomotors		ABS	–	G2K010T	G3K010T G4K510T	G6K010T
Control method				All-digital servo			
Inverter method				IGBT-driven PWM method			
Performance	Speed control range			1:5000			
	Speed variability: Load characteristic			0.01% or less at 0% to 100% (at rated speed)			
	Speed variability: Voltage characteristic			0% at ±10% of rated voltage (at rated speed)			
	Speed variability: Temperature characteristic			±0.1% or less at 0 to 50°C (at rated speed)			
	Torque control reproducibility			±3%			

Servomotor Specifications (R88M-G)

● General Specifications

Item			3,000-r/min Servomotors		3,000-r/min Flat Servomotors	1,000-r/min Servomotors 2,000-r/min Servomotors	
			50 to 750 W	1 to 5 kW	100 to 400 W	900 W to 5 kW	6 to 7.5 kW
Ambient operating temperature and humidity			0 to 40°C, 85% RH max. (with no condensation)				
Ambient storage temperature and humidity			−20 to 65°C, 85% RH max. (with no condensation)	−20 to 80°C, 85% max. (with no condensation)			
Operating and storage atmosphere			No corrosive gases				
Vibration resistance *1			10 to 2,500 Hz Acceleration of 49 m/s² max. in the X, Y, and Z directions	10 to 2,500 Hz Acceleration of 24.5 m/s² max. in the X, Y, and Z directions	10 to 2,500 Hz Acceleration of 49 m/s² max. in the X, Y, and Z directions	10 to 2,500 Hz Acceleration of 24.5 m/s² max. in the X, Y, and Z directions	
Impact resistance			Acceleration of 98 m/s² max. 3 times each in the X, Y, and Z directions			Acceleration of 98 m/s²max. 2 times vertically	
Insulation resistance			20 MΩ min. at 500 VDC between the power terminals and FG terminal				
Dielectric strength			1,500 VAC (50 or 60 Hz) for 1 minute between the power terminals and FG terminal				
Operating position			All directions				
Insulation grade			Type B	Type F	Type B	Type F	
Structure			Totally enclosed, self-cooling				
Protective structure			IP65 (excluding the output shaft rotating section and lead wire ends)				
Vibration grade			V-15				
Mounting method			Flange-mounting				
International standards	EC Directives	Low-voltage Directive	IEC 60034-1/-5				
	UL standards		UL1004-1				–
	CSA standards		CSA 22.2 No.100				

*1. The amplitude may be amplified by mechanical resonance. Do not exceed 80% of the specified value for extended periods of time.

Note: 1. Do not use the cable when it is laid in oil or water.
Note: 2. Do not expose the cable outlet or connections to stress due to bending or the weight of the cable itself.
Note: 3. Always disconnect all connections to the Servo Drive before you perform insulation resistance tests on it. If you perform an insulation resistance test while the Servo Drive is connected, the Servo Drive may be damaged.
Never perform dielectric strength tests on the Servo Drive. Failure to follow this precaution may result in damaging internal elements.

Servomotor Specifications (R88M-G)

● Characteristics

3,000-r/min Cylindrical Servomotors

100-VAC Input Power

Item		Unit	Model (R88M-) G05030H / G05030T	G10030L / G10030S	G20030L / G20030S	G40030L / G40030S
Rated output *1		W	50	100	200	400
Rated torque *1		N·m	0.16	0.32	0.64	1.3
Rated rotation speed		r/min	3000			
Max. momentary rotation speed		r/min	5000			
Max. momentary torque *1		N·m	0.45	0.93	1.78	3.6
Rated current *1		A (rms)	1.1	1.7	2.5	4.6
Max. momentary current *1		A (rms)	3.4	5.1	7.6	13.9
Rotor inertia		kg·m² (GD²/4)	2.5×10^{-6}	5.1×10^{-6}	1.4×10^{-5}	2.6×10^{-5}
Applicable load inertia		—	30 times the rotor inertia max.*2			
Torque constant *1		N·m/A	0.14	0.19	0.26	0.28
Power rate *1		kW/s	10.4	20.1	30.3	62.5
Mechanical time constant		ms	1.56	1.11	0.72	0.55
Electrical time constant		ms	0.7	0.8	2.5	2.9
Allowable radial load *3		N	68	68	245	245
Allowable thrust load *3		N	58	58	98	98
Weight	Without brake	kg	Approx. 0.3	Approx. 0.5	Approx. 0.8	Approx. 1.2
	With brake	kg	Approx. 0.5	Approx. 0.7	Approx. 1.3	Approx. 1.7
Radiation shield dimensions (material)			100 × 80 × t10 (Al)		130 × 120 × t12 (Al)	
Applicable Servo Drives (R88D-)			GNA5L-ML2	GN01L-ML2	GN02L-ML2	GN04L-ML2
Brake specifications	Brake inertia	kg·m² (GD²/4)	2×10^{-7}	2×10^{-7}	1.8×10^{-6}	1.8×10^{-6}
	Excitation voltage *4	V	24 VDC ±5%			
	Power consumption (at 20°C)	W	7	7	9	9
	Current consumption (at 20°C)	A	0.3	0.3	0.36	0.36
	Static friction torque	N·m	0.29 min.	0.29 min.	1.27 min.	1.27 min.
	Attraction time *5	ms	35 max.	35 max.	50 max.	50 max.
	Release time *5	ms	20 max.	20 max.	15 max.	15 max.
	Backlash		±1°			
	Allowable work per braking	J	39.2	39.2	137	137
	Allowable total work	J	4.9×10^{3}	4.9×10^{3}	44.1×10^{3}	44.1×10^{3}
	Allowable angular acceleration	rad/s²	30,000 max. (Speed of 2,800 r/min or more must not be changed in less than 10 ms)			
	Brake life	—	10,000,000 operations			
	Rating	—	Continuous			
	Insulation grade	—	Type F			

*1. These are the values when the Servomotor is combined with a Servo Drive at room temperature (20°C, 65%). The maximum momentary torque shown above indicates the standard value.

*2. Applicable Load Inertia:
- The operable load inertia ratio (load inertia/rotor inertia) depends on the mechanical configuration and its rigidity. For a machine with high rigidity, operation is possible even with high load inertia. Select an appropriate motor and confirm that operation is possible.
- If the dynamic brake is activated frequently with high load inertia, the dynamic brake resistor may burn. Do not repeatedly turn the Servomotor ON and OFF while the dynamic brake is enabled.
- The dynamic brake is designed only for emergency stops. Design the system so that the Servomotor remains stopped for at least 3 minutes after applying the dynamic brake. Otherwise the dynamic brake circuits may fail.

*3. The allowable radial and thrust loads are the values determined for a service life of 20,000 hours at normal operating temperatures. The allowable radial loads are applied as shown in the following diagram.

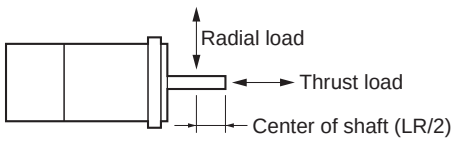

*4. This is an OFF brake. (It is reset when excitation voltage is applied).

*5. The operation time is the value (reference value) measured with a surge suppressor (CR50500 manufactured by Okaya Electric Industries Co., Ltd.).

Torque and Rotation Speed Characteristics

3,000-r/min Cylindrical Servomotors

- **3,000-r/min Servomotors with 100-VAC Power Input**

The following graphs show the characteristics with a 3-m standard cable and a 100-VAC input.

R88M-G05030H/T (50 W)

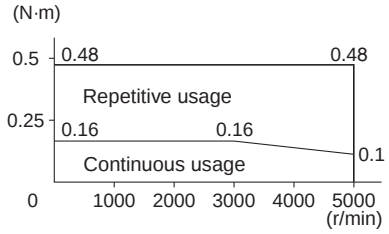

R88M-G10030L/S (100 W)

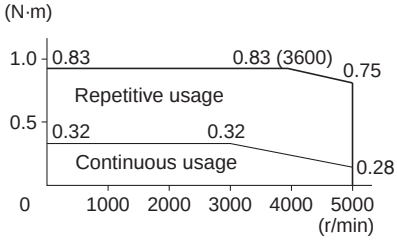

R88M-G20030L/S (200 W)

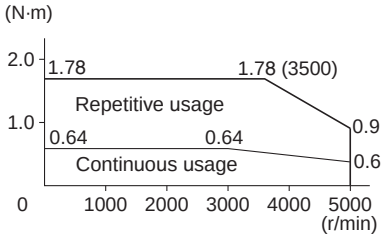

R88M-G40030L/S (400 W)

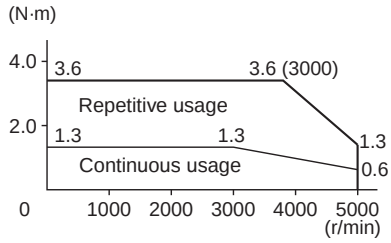

Servomotor Specifications (R88M-G)

● Characteristics

3,000-r/min Cylindrical Servomotors

200-VAC Input Power

Item		Unit	Model (R88M-) G05030H / G05030T	G10030H / G10030T	G20030H / G20030T	G40030H / G40030T	G75030H / G75030T	– / G1K030T	– / G1K530T	– / G2K030T	– / G3K030T	– / G4K030T	– / G5K030T
Rated output *1		W	50	100	200	400	750	1000	1500	2000	3000	4000	5000
Rated torque *1		N·m	0.16	0.32	0.64	1.3	2.4	3.18	4.77	6.36	9.54	12.6	15.8
Rated rotation speed		r/min	3000										
Max. momentary rotation speed		r/min	5000				4500	5000				4500	
Max. momentary torque *1		N·m	0.45	0.90	1.78	3.67	7.05	9.1	12.8	18.4	27.0	36.3	45.1
Rated current *1		A (rms)	1.1	1.1	1.6	2.6	4	7.2	9.4	13	18.6	24.7	28.5
Max. momentary current *1		A (rms)	3.4	3.4	4.9	7.9	12.1	21.4	28.5	40	57.1	75	85.7
Rotor inertia		kg·m² (GD²/4)	2.5×10^{-6}	5.1×10^{-6}	1.4×10^{-5}	2.6×10^{-5}	8.7×10^{-5}	1.69×10^{-4}	2.59×10^{-4}	3.46×10^{-4}	6.77×10^{-4}	1.27×10^{-3}	1.78×10^{-3}
Applicable load inertia		–	30 times the rotor inertia max.*2				20 times the rotor inertia max.*2	15 times the rotor inertia max.*2					
Torque constant *1		N·m/A	0.14	0.19	0.41	0.51	0.64	0.44	0.51	0.48	0.51	0.51	0.57
Power rate *1		kW/s	10.4	20.1	30.3	62.5	66	60	88	117	134	125	140
Mechanical time constant		ms	1.56	1.1	0.71	0.52	0.45	0.78	0.54	0.53	0.46	0.51	0.46
Electrical time constant		ms	0.7	0.79	2.6	3	4.6	6.7	10	10.8	20	20	20
Allowable radial load *3		N	68	68	245	245	392	392	490	490	490	784	784
Allowable thrust load *3		N	58	58	98	98	147	147	196	196	196	343	343
Weight	Without brake	kg	Approx. 0.3	Approx. 0.5	Approx. 0.8	Approx. 1.2	Approx. 2.3	Approx. 4.5	Approx. 5.1	Approx. 6.5	Approx. 9.3	Approx. 12.9	Approx. 17.3
	With brake	kg	Approx. 0.5	Approx. 0.7	Approx. 1.3	Approx. 1.7	Approx. 3.1	Approx. 5.1	Approx. 6.5	Approx. 7.9	Approx. 11	Approx. 14.8	Approx. 19.2
Radiation shield dimensions (material)			100 × 80 × t10 (Al)		130 × 120 × t12 (Al)		170 × 160 × t12 (Al)		320 × 300 × t30 (Al)	320 × 300 × t20 (Al)	380 × 350 × t30 (Al)		
Applicable Servo Drives (R88D-)			GN01H-ML2	GN01H-ML2	GN02H-ML2	GN04H-ML2	GN08H-ML2	GN15H-ML2	GN15H-ML2	GN20H-ML2	GN30H-ML2	GN50H-ML2	GN50H-ML2
Brake specifications	Brake inertia	kg·m² (GD²/4)	2×10^{-7}	2×10^{-7}	1.8×10^{-6}	1.8×10^{-6}	7.5×10^{-6}	2.5×10^{-5}	3.3×10^{-5}	3.3×10^{-5}	3.3×10^{-5}	1.35×10^{-4}	1.35×10^{-4}
	Excitation voltage *4	V	24 VDC ±5%					24 VDC ±10%					
	Power consumption (at 20°C)	W	7	7	9	9	10	18	19	19	19	22	22
	Current consumption (at 20°C)	A	0.3	0.3	0.36	0.36	0.42	0.74	0.81	0.81	0.81	0.9	0.9
	Static friction torque	N·m	0.29 min.	0.29 min.	1.27 min.	1.27 min.	2.45 min.	4.9 min.	7.8 min.	7.8 min.	11.8 min.	16.1 min.	16.1 min.
	Attraction time *5	ms	35 max.	35 max.	50 max.	50 max.	70 max.	50 max.	50 max.	50 max.	80 max.	110 max.	110 max.
	Release time *5	ms	20 max.	20 max.	15 max.	15 max.	20 max.	15 max.	15 max.	15 max.	15 max.	50 max.	50 max.
	Backlash		±1°										
	Allowable work per braking	J	39.2	39.2	137	137	196	392	392	392	392	1470	1470
	Allowable total work	J	4.9×10^{3}	4.9×10^{3}	44.1×10^{3}	44.1×10^{3}	147×10^{3}	2.0×10^{5}	4.9×10^{5}	4.9×10^{5}	4.9×10^{5}	2.2×10^{6}	2.2×10^{6}
	Allowable angular acceleration	rad/s²	30,000 max. (Speed of 2,800 r/min or more must not be changed in less than 10 ms)					10,000 max. (Speed of 900 r/min or more must not be changed in less than 10 ms)					
	Brake life	–	10,000,000 operations										
	Rating	–	Continuous										
	Insulation grade	–	Type F										

*1. These are the values when the Servomotor is combined with a Servo Drive at room temperature (20°C, 65%). The maximum momentary torque shown above indicates the standard value.

*2. Applicable Load Inertia:
- The operable load inertia ratio (load inertia/rotor inertia) depends on the mechanical configuration and its rigidity. For a machine with high rigidity, operation is possible even with high load inertia. Select an appropriate motor and confirm that operation is possible.
- If the dynamic brake is activated frequently with high load inertia, the dynamic brake resistor may burn. Do not repeatedly turn the Servomotor ON and OFF while the dynamic brake is enabled.
- The dynamic brake is designed only for emergency stops. Design the system so that the Servomotor remains stopped for at least 3 minutes after applying the dynamic brake. Otherwise the dynamic brake circuits may fail.

*3. The allowable radial and thrust loads are the values determined for a service life of 20,000 hours at normal operating temperatures. The allowable radial loads are applied as shown in the following diagram.

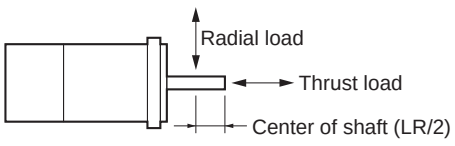

*4. This is an OFF brake. (It is reset when excitation voltage is applied).

*5. The operation time is the value (reference value) measured with a surge suppressor (CR50500 manufactured by Okaya Electric Industries Co., Ltd.).

Torque and Rotation Speed Characteristics

3,000-r/min Cylindrical Servomotors

- **3,000-r/min Servomotors with 200-VAC Power Input**

The following graphs show the characteristics with a 3-m standard cable and a 200-VAC input.

R88M-G05030H/T (50 W)

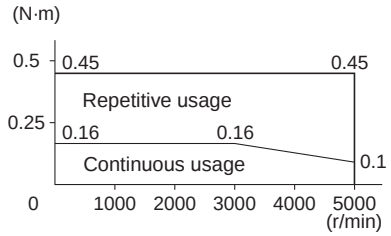

R88M-G10030H/T (100 W)

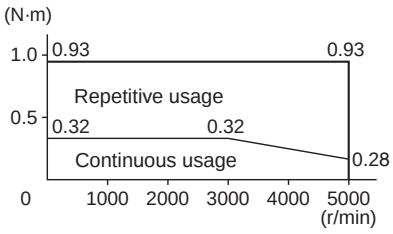

R88M-G20030H/T (200 W)

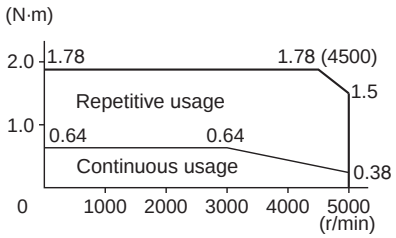

R88M-G40030H/T (400 W)

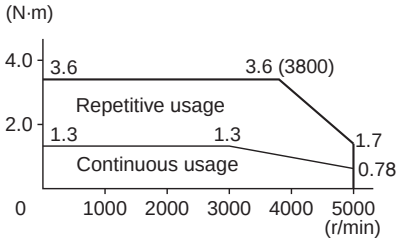

R88M-G75030H/T (750 W)

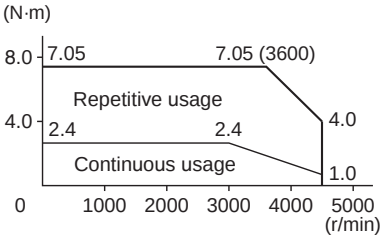

R88M-G1K030T (1 kW)

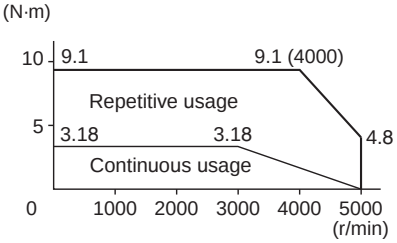

R88M-G1K530T (1.5 kW)

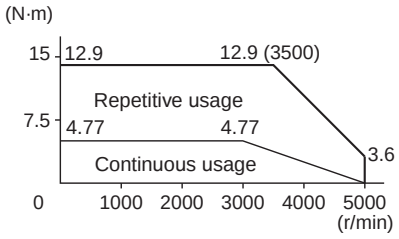

R88M-G2K030T (2 kW)

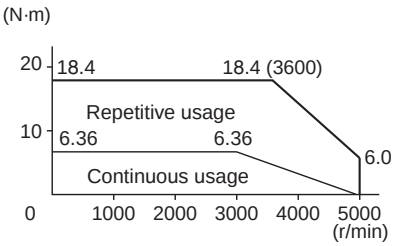

R88M-G3K030T (3 kW)

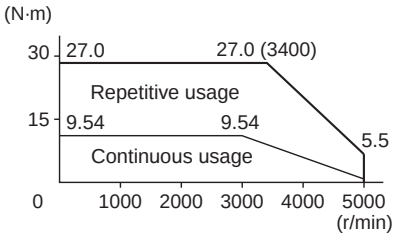

R88M-G4K030T (4 kW)

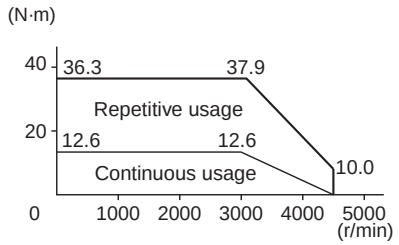

R88M-G5K030T (5 kW)

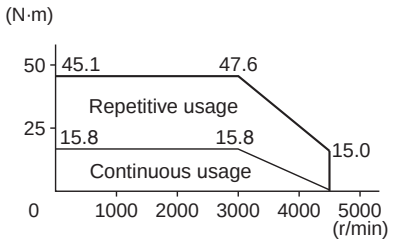

Servomotor Specifications (R88M-GP)

● Characteristics

3,000-r/min Flat Servomotors

100-VAC/200-VAC Input Powers

Item	Unit	Model (R88M-)	100 VAC			200 VAC		
			GP10030L	GP20030L	GP40030L	GP10030H	GP20030H	GP40030H
			GP10030S	GP20030S	GP40030S	GP10030T	GP20030T	GP40030T
Rated output *1	W		100	200	400	100	200	400
Rated torque *1	N·m		0.32	0.64	1.3	0.32	0.64	1.3
Rated rotation speed	r/min		3000					
Max. momentary rotation speed	r/min		5000		4500	5000		
Max. momentary torque *1	N·m		0.84	1.8	3.6	0.86	1.8	3.65
Rated current *1	A (rms)		1.6	2.5	4.4	1	1.6	2.5
Max. momentary current *1	A (rms)		4.9	7.5	13.3	3.1	4.9	7.5
Rotor inertia	kg·m² (GD²/4)		1.0×10^{-5}	3.5×10^{-5}	6.5×10^{-5}	1.0×10^{-5}	3.5×10^{-5}	6.4×10^{-5}
Applicable load inertia	—		20 times the rotor inertia max.*2					
Torque constant *1	N·m/A		0.21	0.27	0.3	0.34	0.42	0.54
Power rate *1	kW/s		10.2	11.7	26.0	10.2	11.5	25.5
Mechanical time constant	ms		0.87	0.75	0.55	1.05	0.81	0.59
Electrical time constant	ms		3.4	6.7	6.7	2.9	5.6	6.6
Allowable radial load *3	N		68	245	245	68	245	245
Allowable thrust load *3	N		58	98	98	58	98	98
Weight	kg	Without brake	Approx. 0.7	Approx. 1.3	Approx. 1.8	Approx. 0.7	Approx. 1.3	Approx. 1.8
	kg	With brake	Approx. 0.9	Approx. 2	Approx. 2.5	Approx. 0.9	Approx. 2	Approx. 2.5
Radiation shield dimensions (material)			130 × 120 × t10 (Al)	170 × 160 × t12(Al)		130 × 120 × t10 (Al)	170 × 160 × t12 (Al)	
Applicable Servo Drives (R88D-)			GN01L-ML2	GN02L-ML2	GN04L-ML2	GN01H-ML2	GN02H-ML2	GN04H-ML2
Brake specifications: Brake inertia	kg·m² (GD²/4)		3×10^{-6}	9×10^{-6}		3×10^{-6}	9×10^{-6}	
Brake specifications: Excitation voltage *4	V		24 VDC ±10%					
Brake specifications: Power consumption (at 20°C)	W		7	10	10	7	10	10
Brake specifications: Current consumption (at 20°C)	A		0.29	0.41	0.41	0.29	0.41	0.41
Brake specifications: Static friction torque	N·m		0.29 min.	1.27 min.	1.27 min.	0.29 min.	1.27 min.	1.27 min.
Brake specifications: Attraction time *5	ms		50 max.	60 max.	60 max.	50 max.	60 max.	60 max.
Brake specifications: Release time *5	ms		15 max.	15 max.	15 max.	15 max.	15 max.	15 max.
Brake specifications: Backlash			±1°					
Brake specifications: Allowable work per braking	J		137	196	196	137	196	196
Brake specifications: Allowable total work	J		44.1×10^3	147×10^3	147×10^3	44.1×10^3	147×10^3	147×10^3
Brake specifications: Allowable angular acceleration	rad/s²		10,000 max. (Speed of 900 r/min or more must not be changed in less than 10 ms)					
Brake specifications: Brake life	—		10,000,000 operations					
Brake specifications: Rating	—		Continuous					
Brake specifications: Insulation grade	—		Type F					

*1. These are the values when the Servomotor is combined with a Servo Drive at room temperature (20°C, 65%). The maximum momentary torque shown above indicates the standard value.

*2. Applicable Load Inertia:
- The operable load inertia ratio (load inertia/rotor inertia) depends on the mechanical configuration and its rigidity. For a machine with high rigidity, operation is possible even with high load inertia. Select an appropriate motor and confirm that operation is possible.
- If the dynamic brake is activated frequently with high load inertia, the dynamic brake resistor may burn. Do not repeatedly turn the Servomotor ON and OFF while the dynamic brake is enabled.
- The dynamic brake is designed only for emergency stops. Design the system so that the Servomotor remains stopped for at least 3 minutes after applying the dynamic brake. Otherwise the dynamic brake circuits may fail.

*3. The allowable radial and thrust loads are the values determined for a service life of 20,000 hours at normal operating temperatures. The allowable radial loads are applied as shown in the following diagram.

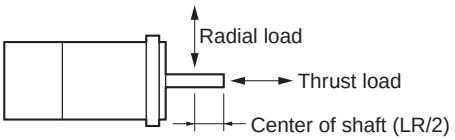

*4. This is an OFF brake. (It is reset when excitation voltage is applied).

*5. The operation time is the value (reference value) measured with a surge suppressor (CR50500 manufactured by Okaya Electric Industries Co., Ltd.).

Torque and Rotation Speed Characteristics

3,000-r/min Flat Servomotors

- **3,000-r/min Servomotors with 100-VAC Power Input**

The following graphs show the characteristics with a 3-m standard cable and a 100-VAC input.

R88M-GP10030L/S (100 W)

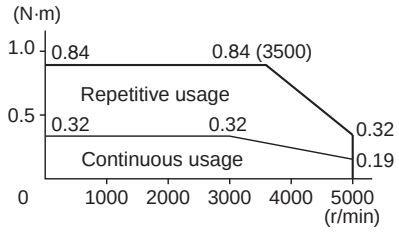

R88M-GP20030L/S (200 W)

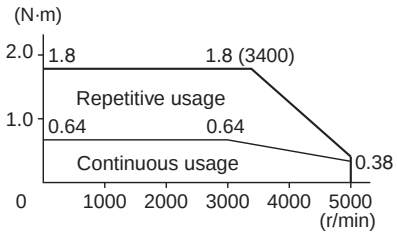

R88M-GP40030L/S (400 W)

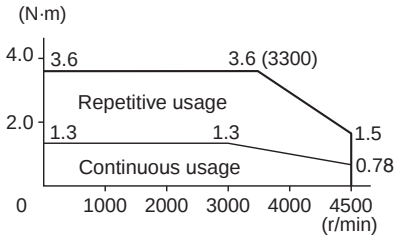

- **3,000-r/min Servomotors with 200-VAC Power Input**

The following graphs show the characteristics with a 3-m standard cable and a 200-VAC input.

R88M-GP10030H/T (100 W)

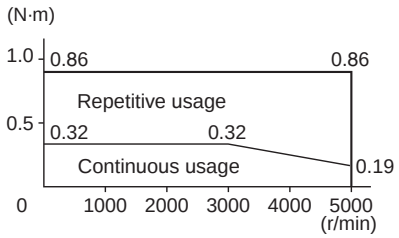

R88M-GP20030H/T (200 W)

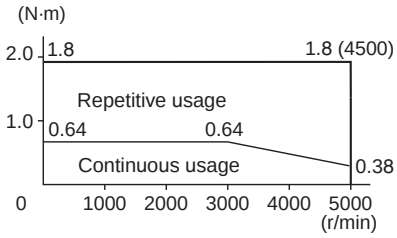

R88M-GP40030H/T (400 W)

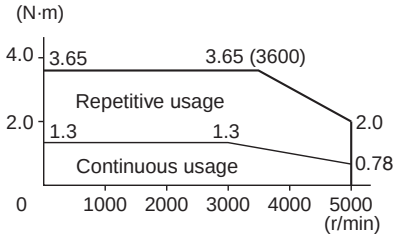

Servomotor Specifications (R88M-G)

● Characteristics

2,000-r/min Cylindrical Servomotors

200-VAC Input Power

Item		Unit	Model (R88M-) G1K020T	G1K520T	G2K020T	G3K020T	G4K020T	G5K020T	G7K515T
Rated output *1		W	1000	1500	2000	3000	4000	5000	7500
Rated torque *1		N·m	4.8	7.15	9.54	14.3	18.8	23.8	48
Rated rotation speed		r/min	2000						1500
Max. momentary rotation speed		r/min	3000						2000
Max. momentary torque *1		N·m	13.5	19.6	26.5	41.2	54.9	70.6	111
Rated current *1		A (rms)	5.6	9.4	12.3	17.8	23.4	28	46.6
Max. momentary current *1		A (rms)	17.1	28.5	37.1	54.2	71.4	85.7	117.8
Rotor inertia		kg·m² (GD²/4)	6.17×10^{-4}	1.12×10^{-3}	1.52×10^{-3}	2.23×10^{-3}	4.25×10^{-3}	6.07×10^{-3}	9.9×10^{-3}
Applicable load inertia		—	10 times the rotor inertia max.*2						
Torque constant *1		N·m/A	0.88	0.76	0.78	0.81	0.81	0.85	1.03
Power rate *1		kW/s	37.3	45.8	60	91.6	83.2	93.5	230
Mechanical time constant		ms	0.7	0.81	0.75	0.72	1	0.9	0.71
Electrical time constant		ms	18	19	21	20	24	32	34
Allowable radial load *3		N	490	490	490	784	784	784	1176
Allowable thrust load *3		N	196	196	196	343	343	343	490
Weight	Without brake	kg	Approx. 6.8	Approx. 8.5	Approx. 10.6	Approx. 14.6	Approx. 18.8	Approx. 25	Approx. 41
	With brake	kg	Approx. 8.7	Approx. 10.1	Approx. 12.5	Approx. 16.5	Approx. 21.3	Approx. 28.5	Approx. 45
Radiation shield dimensions (material)			275 × 260 × t15 (Al)			380 × 350 × t30 (Al)	470 × 440 × t30 (Al)		
Applicable Servo Drives (R88D-)			GN10H-ML2	GN15H-ML2	GN20H-ML2	GN30H-ML2	GN50H-ML2	GN50H-ML2	GN75H-ML2
Brake specifications	Brake inertia	kg·m² (GD²/4)	1.35×10^{-4}				4.25×10^{-4}	4.7×10^{-4}	4.7×10^{-4}
	Excitation voltage *4	V	24 VDC ±10%						
	Power consumption(at 20°C)	W	14	19	19	22	26	31	34
	Current consumption (at 20°C)	A	0.59	0.79	0.79	0.9	1.1	1.3	1.4
	Static friction torque	N·m	4.9 min.	13.7 min.	13.7 min.	16.1 min.	21.5 min.	24.5 min.	58.8 min.
	Attraction time *5	ms	80 max.	100 max.	100 max.	110 max.	90 max.	80 max.	150 max.
	Release time *5	ms	70 max.	50 max.	50 max.	50 max.	35 min.	25 min.	50 max.
	Backlash		±1°						
	Allowable work per braking	J	588	1176	1176	1170	1078	1372	1372
	Allowable total work	J	7.8×10^{5}	1.5×10^{6}	1.5×10^{6}	2.2×10^{6}	2.5×10^{6}	2.9×10^{6}	2.9×10^{6}
	Allowable angular acceleration	rad/s²	10,000 max. (Speed of 900 r/min or more must not be changed in less than 10 ms)						
	Brake life	—	10,000,000 operations						
	Rating	—	Continuous						
	Insulation grade	—	Type F						

*1. These are the values when the Servomotor is combined with a Servo Drive at room temperature (20°C, 65%). The maximum momentary torque shown above indicates the standard value.

*2. Applicable Load Inertia:
- The operable load inertia ratio (load inertia/rotor inertia) depends on the mechanical configuration and its rigidity. For a machine with high rigidity, operation is possible even with high load inertia. Select an appropriate motor and confirm that operation is possible.
- If the dynamic brake is activated frequently with high load inertia, the dynamic brake resistor may burn. Do not repeatedly turn the Servomotor ON and OFF while the dynamic brake is enabled.
- The dynamic brake is designed only for emergency stops. Design the system so that the Servomotor remains stopped for at least 3 minutes after applying the dynamic brake. Otherwise the dynamic brake circuits may fail.

*3. The allowable radial and thrust loads are the values determined for a service life of 20,000 hours at normal operating temperatures. The allowable radial loads are applied as shown in the following diagram.

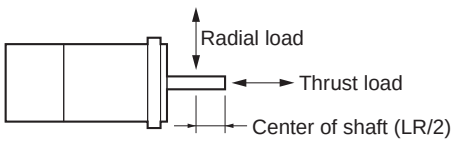

*4. This is an OFF brake. (It is reset when excitation voltage is applied).

*5. The operation time is the value (reference value) measured with a surge suppressor (CR50500 manufactured by Okaya Electric Industries Co., Ltd.).

Torque and Rotation Speed Characteristics

2,000-r/min Cylindrical Servomotors

- **2,000-r/min Servomotors with 200-VAC Power Input**

The following graphs show the characteristics with a 3-m standard cable and a 200-VAC input.

R88M-G1K020T (1 kW)

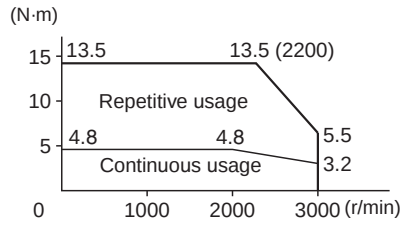

R88M-G1K520T (1.5 kW)

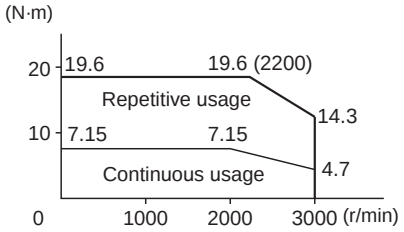

R88M-G2K020T (2 kW)

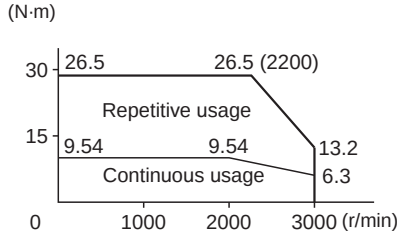

R88M-G3K020T (3 kW)

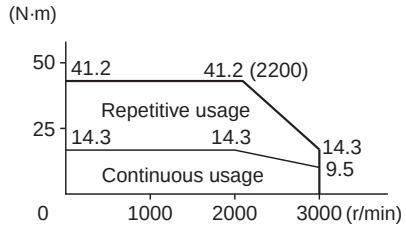

R88M-G4K020T (4 kW)

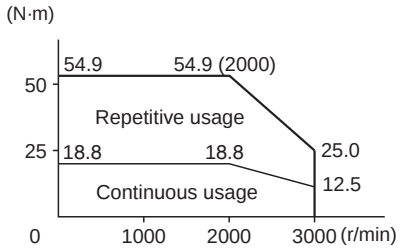

R88M-G5K020T (5 kW)

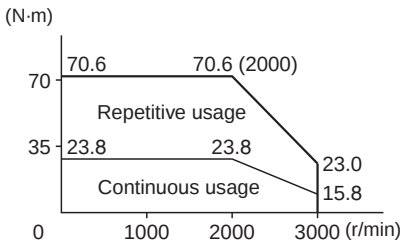

R88M-G7K515T (7.5 kW)

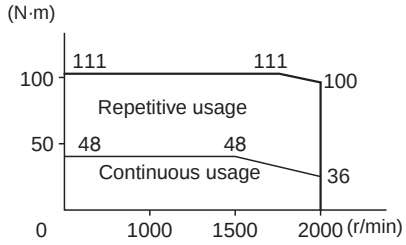

Servomotor Specifications (R88M-G)

● Characteristics

1,000-r/min Cylindrical Servomotors

200-VAC Input Power

Item		Model (R88M-) / Unit	G90010T	G2K010T	G3K010T	G4K510T	G6K010T
Rated output *1		W	900	2000	3000	4500	6000
Rated torque *1		N·m	8.62	19.1	28.4	42.9	57.2
Rated rotation speed		r/min	1000				
Max. momentary rotation speed		r/min	2000				
Max. momentary torque *1		N·m	18.4	41.5	60	101	130
Rated current *1		A (rms)	7.6	18.5	24	33	57.2
Max. momentary current *1		A (rms)	17.1	44	57.1	84.2	121.4
Rotor inertia		kg·m² (GD²/4)	1.12×10^{-3}	3.55×10^{-3}	5.57×10^{-3}	8.09×10^{-3}	9.9×10^{-3}
Applicable load inertia		—	10 times the rotor inertia max.*2				
Torque constant *1		N·m/A	1.13	1	1.1	1.3	1.22
Power rate *1		kW/s	66.3	103	145	228	331
Mechanical time constant		ms	0.88	0.97	0.74	0.7	0.65
Electrical time constant		ms	20	25	30	31	46.2
Allowable radial load *3		N	686	1176	1470	1470	1764
Allowable thrust load *3		N	196	490	490	490	588
Weight	Without brake	kg	Approx. 8.5	Approx. 17.5	Approx. 25	Approx. 34	Approx. 41
	With brake	kg	Approx. 10	Approx. 21	Approx. 28.5	Approx. 39.5	Approx. 45
Radiation shield dimensions (material)			275 × 260 × t15 (Al)	470 × 440 × t30 (Al)			
Applicable Servo Drives (R88D-)			GN15H-ML2	GN30H-ML2	GN50H-ML2	GN50H-ML2	GN75H-ML2
Brake specifications	Brake inertia	kg·m² (GD²/4)	1.35×10^{-4}	4.7×10^{-4}			
	Excitation voltage *4	V	24 VDC ±10%				
	Power consumption (at 20°C)	W	19	31	34	34	34
	Current consumption (at 20°C)	A	0.79	1.3	1.4	1.4	1.4
	Static friction torque	N·m	13.7 min.	24.5 min.	58.8 min.	58.8 min.	58.8 min.
	Attraction time *5	ms	100 max.	80 max.	150 max.	150 max.	150 max.
	Release time *5	ms	50 max.	25 max.	50 max.	50 max.	50 max.
	Backlash		±1°				
	Allowable work per braking	J	1176	1372	1372	1372	1372
	Allowable total work	J	1.6×10^6	2.9×10^6	2.9×10^6	2.9×10^6	2.9×10^6
	Allowable angular acceleration	rad/s²	10,000 max. (Speed of 900 r/min or more must not be changed in less than 10 ms)				
	Brake life	—	10,000,000 operations				
	Rating	—	Continuous				
	Insulation grade	—	Type F				

*1. These are the values when the Servomotor is combined with a Servo Drive at room temperature (20°C, 65%). The maximum momentary torque shown above indicates the standard value.

*2. Applicable Load Inertia:
- The operable load inertia ratio (load inertia/rotor inertia) depends on the mechanical configuration and its rigidity. For a machine with high rigidity, operation is possible even with high load inertia. Select an appropriate motor and confirm that operation is possible.
- If the dynamic brake is activated frequently with high load inertia, the dynamic brake resistor may burn. Do not repeatedly turn the Servomotor ON and OFF while the dynamic brake is enabled.
- The dynamic brake is designed only for emergency stops. Design the system so that the Servomotor remains stopped for at least 3 minutes after applying the dynamic brake. Otherwise the dynamic brake circuits may fail.

*3. The allowable radial and thrust loads are the values determined for a service life of 20,000 hours at normal operating temperatures. The allowable radial loads are applied as shown in the following diagram.

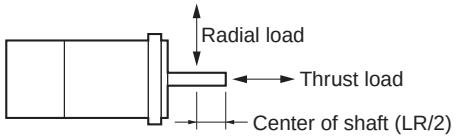

*4. This is an OFF brake. (It is reset when excitation voltage is applied).

*5. The operation time is the value (reference value) measured with a surge suppressor (CR50500 manufactured by Okaya Electric Industries Co., Ltd.).

Torque and Rotation Speed Characteristics

1,000-r/min Cylindrical Servomotors

- **1,000-r/min Servomotors with 200-VAC Power Input**

The following graphs show the characteristics with a 3-m standard cable and a 200-VAC input.

R88M-G90010T (900 W)

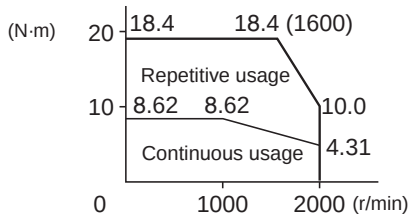

R88M-G2K010T (2 kW)

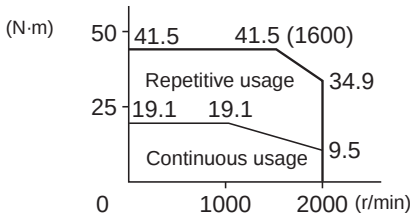

R88M-G3K010T (3 kW)

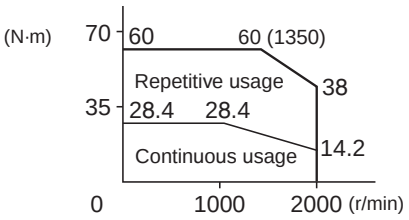

R88M-G4K510 (4.5 kW)

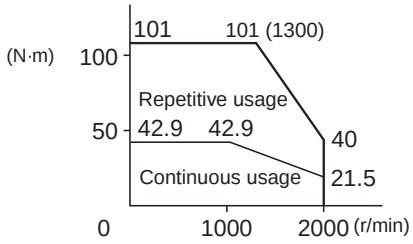

R88M-G6K010T (6 kW)

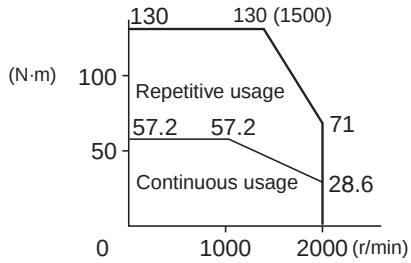

Decelerator Specifications (R88G-HPG/VRSF)

● Backlash: 3 Arcminutes Max.

Decelerators for 3,000-r/min Servomotors

Model			Rated rotation speed	Rated torque	Efficiency	Maximum momentary rotation speed	Maximum momentary torque	Decelerator inertia	Allowable radial load	Allowable thrust load	Weight
			r/min	N·m	%	r/min	N·m	kg·m²	N	N	kg
50 W	1/5	R88G-HPG11A05100B	600	0.60	75	1000	1.68	5.00×10^{-7}	135	538	0.29
	1/9	R88G-HPG11A09050B	333	1.17	81	555	3.29	3.00×10^{-7}	161	642	0.29
	1/21	R88G-HPG14A21100B	143	2.18	65	238	6.13	5.00×10^{-6}	340	1358	1.04
	1/33	R88G-HPG14A33050B	91	3.73	71	151	10.5	4.40×10^{-6}	389	1555	1.04
	1/45	R88G-HPG14A45050B	67	5.09	71	111	14.3	4.40×10^{-6}	427	1707	1.04
100 W	1/5	R88G-HPG11A05100B	600	1.37	86	1000	3.8	5.00×10^{-7}	135	538	0.29
	1/11	R88G-HPG14A11100B	273	2.63	75	454	7.39	6.00×10^{-6}	280	1119	1.04
	1/21	R88G-HPG14A21100B	143	5.40	80	238	15.2	5.00×10^{-6}	340	1358	1.04
	1/33	R88G-HPG20A33100B	91	6.91	65	151	19.4	6.50×10^{-5}	916	3226	2.4
	1/45	R88G-HPG20A45100B	67	9.42	65	111	26.5	6.50×10^{-5}	1006	3541	2.4
200 W	1/5	R88G-HPG14A05200B	600	2.49	78	1000	6.93	2.07×10^{-5}	221	883	1.02
	1/11	R88G-HPG14A11200B	273	6.01	85	454	16.7	1.93×10^{-5}	280	1119	1.09
	1/21	R88G-HPG20A21200B	143	10.2	76	238	28.5	4.90×10^{-5}	800	2817	2.9
	1/33	R88G-HPG20A33200B	91	17.0	81	151	47.4	4.50×10^{-5}	916	3226	2.9
	1/45	R88G-HPG20A45200B	67	23.2	81	111	64.6	4.50×10^{-5}	1006	3541	2.9
400 W	1/5	R88G-HPG14A05400B	600	5.66	87	1000	16.0 (15.7)	2.07×10^{-5}	221	883	1.09
	1/11	R88G-HPG20A11400B	273	11.7	82	454	33.1 (32.5)	5.70×10^{-5}	659	2320	2.9
	1/21	R88G-HPG20A21400B	143	23.5	86	238	66.5 (65.2)	4.90×10^{-5}	800	2547	2.9
	1/33	R88G-HPG32A33400B	91	34.7	81	151	98.2 (96.3)	6.20×10^{-5}	1565	6240	7.5
	1/45	R88G-HPG32A45400B	67	47.4	81	111	133.9 (131.4)	6.10×10^{-5}	1718	6848	7.5
750 W	1/5	R88G-HPG20A05750B	600	9.94	83	1000	29.2	6.80×10^{-5}	520	1832	2.9
	1/11	R88G-HPG20A11750B	273	23.2	88	454	68.1	6.00×10^{-5}	659	2320	3.1
	1/21	R88G-HPG32A21750B	143	42.3	84	238	124.3	3.00×10^{-4}	1367	5448	7.8
	1/33	R88G-HPG32A33750B	91	69.7	88	151	204.7	2.70×10^{-4}	1565	6240	7.8
	1/45	R88G-HPG32A45750B	67	95.0	88	111	279.2	2.70×10^{-4}	1718	6848	7.8
1 kW	1/5	R88G-HPG32A051K0B	600	11.5	72	1000	32.9	3.90×10^{-4}	889	3542	7.3
	1/11	R88G-HPG32A111K0B	273	28.9	83	454	82.6	3.40×10^{-4}	1126	4488	7.8
	1/21	R88G-HPG32A211K0B	143	58.1	87	238	166.1	3.00×10^{-4}	1367	5488	7.8
	1/33	R88G-HPG32A331K0B	91	94.3	90	151	270.0	2.80×10^{-4}	1565	6240	7.8
	1/45	R88G-HPG50A451K0B	67	124.2	87	100*1	355.4	4.70×10^{-4}	4538	15694	19.0
1.5 kW	1/5	R88G-HPG32A052K0B	600	19.1	80	1000	51.3	3.90×10^{-4}	889	3542	7.4
	1/11	R88G-HPG32A112K0B	273	45.7	87	454	122.5	3.40×10^{-4}	1126	4488	7.9
	1/21	R88G-HPG32A211K5B	143	90.1	90	238	241.9	3.00×10^{-4}	1367	5448	7.9
	1/33	R88G-HPG50A332K0B	91	141.5	90	136*1	379.7	4.80×10^{-4}	4135	14300	19.0
	1/45	R88G-HPG50A451K5B	67	192.9	90	100*1	517.8	4.70×10^{-4}	4538	15694	19.0
2 kW	1/5	R88G-HPG32A052K0B	600	26.7	84	1000	77.4	3.90×10^{-4}	889	3542	7.4
	1/11	R88G-HPG32A112K0B	273	62.4	89	454	180.7	3.40×10^{-4}	1126	4488	7.9
	1/21	R88G-HPG50A212K0B	143	118.9	89	214*1	343.9	5.80×10^{-4}	3611	12486	19.0
	1/33	R88G-HPG50A332K0B	91	191.8	91	136*1	555.0	4.80×10^{-4}	4135	14300	19.0
3 kW	1/5	R88G-HPG32A053K0B	600	42.0	88	1000	118.9	3.80×10^{-4}	889	3542	7.3
	1/11	R88G-HPG50A113K0B	273	92.3	88	409*1	261.4	7.70×10^{-4}	2974	10285	19.0
	1/21	R88G-HPG50A213K0B	143	183.0	91	214*1	517.7	5.80×10^{-4}	3611	12486	19.0
4 kW	1/5	R88G-HPG32A054K0B	600	53.9	90	900*1	163.4	3.80×10^{-4}	889	3542	7.9
	1/11	R88G-HPG50A115K0B	273	124.6	90	409*1	359.0	8.80×10^{-4}	2974	10285	19.1
5 kW	1/5	R88G-HPG50A055K0B	600	69.3	88	900*1	197.8	1.20×10^{-3}	2347	8118	17.7
	1/11	R88G-HPG50A115K0B	273	158.4	91	409*1	451.9	8.80×10^{-4}	2974	10285	19.1

*1. Keep the maximum rotation speed at 4,500 r/min or less.

Note: 1. The values inside parentheses ( ) are for 100-V Servomotors.
Note: 2. The Decelerator inertia is the Servomotor shaft conversion value.
Note: 3. The protective structure for Servomotors with Decelerators satisfies IP44.
Note: 4. The allowable radial load is the value at the T/2 position.
Note: 5. The standard models have a straight shaft. Models with a key and tap are indicated with "J" at the end of the model number (the suffix in the box).

Decelerators for 3,000-r/min Flat Servomotors

Model			Rated rotation speed	Rated torque	Efficiency	Maximum momentary rotation speed	Maximum momentary torque	Decelerator inertia	Allowable radial load	Allowable thrust load	Weight
			r/min	N·m	%	r/min	N·m	kg·m²	N	N	kg
100 W	1/5	R88G-HPG11A05100PB	600	1.37	85	1000	3.67 (3.59)	5.00×10^{-7}	135	538	0.34
	1/11	R88G-HPG14A11100PB	273	2.63	75	454	7.06 (6.89)	6.00×10^{-6}	280	1119	1.04
	1/21	R88G-HPG14A21100PB	143	5.40	80	238	14.5 (14.2)	5.00×10^{-6}	340	1358	1.04
	1/33	R88G-HPG20A33100PB	91	6.91	65	151	18.6 (18.1)	4.50×10^{-5}	916	3226	2.9
	1/45	R88G-HPG20A45100PB	67	9.42	65	111	25.3 (24.7)	4.50×10^{-5}	1006	3541	2.9
200 W	1/5	R88G-HPG14A05200PB	600	2.49	78	1000	7.01	2.07×10^{-5}	221	883	0.99
	1/11	R88G-HPG20A11200PB	273	4.75	68	454	13.4	5.80×10^{-5}	659	2320	3.1
	1/21	R88G-HPG20A21200PB	143	10.2	76	238	28.8	4.90×10^{-5}	800	2817	3.1
	1/33	R88G-HPG20A33200PB	91	17.0	81	151	47.9	4.50×10^{-5}	916	3226	3.1
	1/45	R88G-HPG20A45200PB	67	23.2	81	111	65.4	4.50×10^{-5}	1006	3541	3.1
400 W	1/5	R88G-HPG20A05400PB	600	4.67	72	1000 (900)	13.1 (12.9)	7.10×10^{-5}	520	1832	3.1
	1/11	R88G-HPG20A11400PB	273	11.7	82	454 (409)	32.9 (32.4)	5.80×10^{-5}	659	2320	3.1
	1/21	R88G-HPG20A21400PB	143	23.5	86	238 (214)	66.2 (65.2)	4.90×10^{-5}	800	2817	3.1
	1/33	R88G-HPG32A33400PB	91	34.7	81	151 (136)	97.6 (96.2)	2.80×10^{-4}	1565	6240	7.8
	1/45	R88G-HPG32A45400PB	67	47.4	81	111 (100)	133.0 (131.2)	2.80×10^{-4}	1718	6848	7.8

Note: 1. The values inside parentheses ( ) are for 100-V Servomotors.
Note: 2. The Decelerator inertia is the Servomotor shaft conversion value.
Note: 3. The protective structure for Servomotors with Decelerators satisfies IP44.
Note: 4. The allowable radial load is the value at the T/2 position.
Note: 5. The standard models have a straight shaft. Models with a key and tap are indicated with "J" at the end of the model number (the suffix in the box).

Decelerators for 2,000-r/min Servomotors

Model			Rated rotation speed	Rated torque	Efficiency	Maximum momentary rotation speed	Maximum momentary torque	Decelerator inertia	Allowable radial load	Allowable thrust load	Weight
			r/min	N·m	%	r/min	N·m	kg·m²	N	N	kg
1 kW	1/5	R88G-HPG32A053K0B	400	20.4	85	600	57.4	3.80×10^{-4}	889	3542	7.3
	1/11	R88G-HPG32A112K0SB	182	47.3	90	273	133.1	3.40×10^{-4}	1126	4488	7.8
	1/21	R88G-HPG32A211K0SB	95	92.3	92	143	259.7	2.90×10^{-4}	1367	5448	7.8
	1/33	R88G-HPG50A332K0SB	60	144.9	92	91	407.6	4.70×10^{-4}	4135	14300	19.0
	1/45	R88G-HPG50A451K0SB	44	197.7	92	67	555.9	4.70×10^{-4}	4538	15694	19.0
1.5 kW	1/5	R88G-HPG32A053K0B	400	31.7	89	600	86.8	3.80×10^{-4}	889	3542	7.3
	1/11	R88G-HPG32A112K0SB	182	72.1	92	273	197.7	3.40×10^{-4}	1126	4488	7.8
	1/21	R88G-HPG50A213K0B	95	137.5	92	143	377.0	5.80×10^{-4}	3611	12486	19.0
	1/33	R88G-HPG50A332K0SB	60	219.4	93	91	601.5	4.70×10^{-4}	4135	14300	19.0
2 kW	1/5	R88G-HPG32A053K0B	400	43.2	91	600	119.9	3.80×10^{-4}	889	3542	7.3
	1/11	R88G-HPG32A112K0SB	182	97.4	93	273	270.5	3.40×10^{-4}	1126	4488	7.8
	1/21	R88G-HPG50A213K0B	95	185.6	93	143	515.9	5.80×10^{-4}	3611	12486	19.0
	1/33	R88G-HPG50A332K0SB	60	270.0*1	93	91	815.0	4.70×10^{-4}	4135	14300	19.0
3 kW	1/5	R88G-HPG32A054K0B	400	66.0	92	600	190.1	3.80×10^{-4}	889	3542	7.9
	1/11	R88G-HPG50A115K0B	182	145.2	92	273	418.3	8.80×10^{-4}	2974	10285	19.1
	1/21	R88G-HPG50A213K0SB	95	260.0*1	93	143	806.4	6.90×10^{-4}	3611	12486	19.1
	1/25	R88G-HPG65A253K0SB	80	322.9	90	120	930.1	3.00×10^{-3}	7846	28654	52.0
4 kW	1/5	R88G-HPG50A054K0SB	400	85.8	91	600	250.3	1.20×10^{-3}	2347	8118	18.6
	1/11	R88G-HPG50A114K0SB	182	192.7	93	273	562.8	8.70×10^{-4}	2974	10285	20.1
	1/20	R88G-HPG65A204K0SB	100	342.2	91	150	999.2	3.28×10^{-3}	7338	26799	52.0
	1/25	R88G-HPG65A254K0SB	80	430.9	92	120	1258.6	3.24×10^{-3}	7846	28654	52.0
5 kW	1/5	R88G-HPG50A055K0SB	400	109.8	92	600	325.5	1.10×10^{-3}	2347	8118	22.0
	1/11	R88G-HPG50A115K0SB	182	200.0*1	93	273	723.8	8.40×10^{-4}	2974	10285	23.5
	1/20	R88G-HPG65A205K0SB	100	438.2	92	150	1300.5	2.85×10^{-3}	7338	26799	55.4
	1/25	R88G-HPG65A255K0SB	80	550.9	93	120	1634.4	2.81×10^{-3}	7846	28654	55.4
7.5 kW	1/5	R88G-HPG65A057K5SB	300	221.1	92	400	511.2	2.07×10^{-2}	4841	17681	48.0
	1/12	R88G-HPG65A127K5SB	125	540.8	94	166	1250.7	2.02×10^{-2}	6295	22991	52.0

*1. "Rated torque" indicates the allowable rated torque for the decelerator. Do not exceed this value.

Note: 1. The Decelerator inertia is the Servomotor shaft conversion value.
Note: 2. The protective structure for Servomotors with Decelerators satisfies IP44.
Note: 3. The allowable radial load is the value at the T/2 position.
Note: 4. The standard models have a straight shaft. Models with a key and tap are indicated with "J" at the end of the model number (the suffix in the box).

Decelerators for 1,000-r/min Servomotors

Model			Rated rotation speed	Rated torque	Efficiency	Maximum momentary rotation speed	Maximum momentary torque	Decelerator inertia	Allowable radial load	Allowable thrust load	Weight
			r/min	N·m	%	r/min	N·m	kg·m²	N	N	kg
900 W	1/5	R88G-HPG32A05900TB	200	39.9	93	400	85.2	3.80×10^{-4}	889	3542	7.9
	1/11	R88G-HPG32A11900TB	90	89.0	94	182	190.1	3.40×10^{-4}	1126	4488	8.4
	1/21	R88G-HPG50A21900TB	47	169.8	94	95	362.4	7.00×10^{-4}	3611	12486	19.1
	1/33	R88G-HPG50A33900TB	30	268.5	94	60	573.2	5.90×10^{-4}	4135	14300	19.1
2 kW	1/5	R88G-HPG32A052K0TB	200	90.2	95	400	196.1	4.90×10^{-4}	889	3542	8.9
	1/11	R88G-HPG50A112K0TB	90	198.4	94	182	430.9	8.40×10^{-4}	2974	10285	20.1
	1/21	R88G-HPG50A212K0TB	47	320.0*1	95	95	786.8	6.50×10^{-4}	3611	12486	20.1
	1/25	R88G-HPG65A255K0SB	40	446.7	94	80	971.1	2.81×10^{-3}	7846	28654	55.4
3 kW	1/5	R88G-HPG50A055K0SB	200	133.9	94	400	282.9	1.10×10^{-3}	2347	8118	22.0
	1/11	R88G-HPG50A115K0SB	90	246.0*1	95	182	684.0	8.40×10^{-4}	2974	10285	23.5
	1/20	R88G-HPG65A205K0SB	50	534.7	94	100	1129.2	2.85×10^{-3}	7338	26799	55.4
	1/25	R88G-HPG65A255K0SB	40	669.9	94	80	1411.5	2.81×10^{-3}	7846	28654	55.4
4.5 kW	1/5	R88G-HPG50A054K5TB	200	203.5	95	400	479.2	1.20×10^{-3}	2347	8118	22.0
	1/12	R88G-HPG65A127K5SB	83	485.6	94	166	1142.9	2.02×10^{-2}	6295	22991	52.0
	1/20	R88G-HPG65A204K5TB	50	813.1	95	100	1915.0	1.92×10^{-2}	7338	26799	52.0
6 kW	1/5	R88G-HPG65A057K5SB	200	268.1	94	400	609.7	2.07×10^{-2}	4841	17681	48.0
	1/12	R88G-HPG65A127K5SB	83	650.3	95	166	1477.3	2.02×10^{-2}	6295	22991	52.0

*1. "Rated torque" indicates the allowable rated torque for the decelerator. Do not exceed this value.

Note: 1. The Decelerator inertia is the Servomotor shaft conversion value.
Note: 2. The protective structure for Servomotors with Decelerators satisfies IP44.
Note: 3. The allowable radial load is the value at the T/2 position.
Note: 4. The standard models have a straight shaft. Models with a key and tap are indicated with "J" at the end of the model number (the suffix in the box).

● **Backlash: 15 Arcminutes Max.**

Decelerators for 3,000-r/min Servomotors

Model			Rated rotation speed	Rated torque	Efficiency	Maximum momentary rotation speed	Maximum momentary torque	Decelerator inertia	Allowable radial load	Allowable thrust load	Weight
			r/min	N·m	%	r/min	N·m	kg·m²	N	N	kg
50 W	1/5	R88G-VRSF05B100CJ	600	0.52	65	1000	1.46	4.00×10^{-6}	392	196	0.55
	1/9	R88G-VRSF09B100CJ	333	0.93	65	556	2.63	3.50×10^{-6}	441	220	0.55
	1/15	R88G-VRSF15B100CJ	200	1.67	70	333	4.73	3.50×10^{-6}	588	294	0.70
	1/25	R88G-VRSF25B100CJ	120	2.78	70	200	7.88	3.25×10^{-6}	686	343	0.70
100 W	1/5	R88G-VRSF05B100CJ	600	1.19	75	1000	3.38	4.00×10^{-6}	392	196	0.55
	1/9	R88G-VRSF09B100CJ	333	2.29	80	556	6.48	3.50×10^{-6}	441	220	0.55
	1/15	R88G-VRSF15B100CJ	200	3.81	80	333	10.8	3.50×10^{-6}	588	294	0.70
	1/25	R88G-VRSF25B100CJ	120	6.36	80	200	18.0	3.25×10^{-6}	686	343	0.70
200 W	1/5	R88G-VRSF05B200CJ	600	2.70	85	1000	7.57	1.18×10^{-5}	392	196	0.72
	1/9	R88G-VRSF09C200CJ	333	3.77	66	556	10.6	2.75×10^{-5}	931	465	1.70
	1/15	R88G-VRSF15C200CJ	200	6.29	66	333	17.6	3.00×10^{-5}	1176	588	2.10
	1/25	R88G-VRSF25C200CJ	120	11.1	70	200	31.2	2.88×10^{-5}	1323	661	2.10
400 W	1/5	R88G-VRSF05C400CJ	600	5.40	85	1000	15.6 (15.3)	3.63×10^{-5}	784	392	1.70
	1/9	R88G-VRSF09C400CJ	333	9.50	83	556	27.4 (26.8)	2.75×10^{-5}	931	465	1.70
	1/15	R88G-VRSF15C400CJ	200	15.8	83	333	45.7 (44.8)	3.00×10^{-5}	1176	588	2.10
	1/25	R88G-VRSF25C400CJ	120	26.4	83	200	76.1 (74.7)	2.88×10^{-5}	1323	661	2.10
750 W	1/5	R88G-VRSF05C750CJ	600	10.7	90	1000	31.7	7.13×10^{-5}	784	392	2.10
	1/9	R88G-VRSF09D750CJ	333	18.2	85	556	53.9	6.50×10^{-5}	1176	588	3.40
	1/15	R88G-VRSF15D750CJ	200	30.4	85	333	89.9	7.00×10^{-5}	1372	686	3.80
	1/25	R88G-VRSF25D750CJ	120	50.7	85	200	149.8	6.80×10^{-5}	1617	808	3.80

Note: 1. The values inside parentheses ( ) are for 100-V Servomotors.
Note: 2. The Decelerator inertia is the Servomotor shaft conversion value.
Note: 3. The protective structure for Servomotors with Decelerators satisfies IP44.
Note: 4. The allowable radial load is the value at the T/2 position.
Note: 5. The standard models have a straight shaft with a key.

Decelerators for 3,000-r/min Flat Servomotor

Model			Rated rotation speed	Rated torque	Efficiency	Maximum momentary rotation speed	Maximum momentary torque	Decelerator inertia	Allowable radial load	Allowable thrust load	Weight
			r/min	N·m	%	r/min	N·m	kg·m²	N	N	kg
100 W	1/5	R88G-VRSF05B100PCJ	600	1.19	75	1000	3.15	4.00×10^{-6}	392	196	0.72
	1/9	R88G-VRSF09B100PCJ	333	2.29	80	556	6.048	3.50×10^{-6}	441	220	0.72
	1/15	R88G-VRSF15B100PCJ	200	3.81	80	333	10.08	3.50×10^{-6}	588	294	0.87
	1/25	R88G-VRSF25B100PCJ	120	6.36	80	200	16.8	3.25×10^{-6}	686	343	0.87
200 W	1/5	R88G-VRSF05B200PCJ	600	2.70	85	1000	7.65	1.18×10^{-5}	392	196	0.85
	1/9	R88G-VRSF09C200PCJ	333	3.77	66	556	10.692	2.75×10^{-5}	931	465	1.80
	1/15	R88G-VRSF15C200PCJ	200	6.29	66	333	17.82	3.00×10^{-5}	1176	588	2.20
	1/25	R88G-VRSF25C200PCJ	120	11.1	70	200	31.5	2.88×10^{-5}	1323	661	2.20
400 W	1/5	R88G-VRSF05C400PCJ	600	5.40	85	1000 (900)	15.5 (15.3)	3.63×10^{-5}	784	392	1.80
	1/9	R88G-VRSF09C400PCJ	333	9.50	83	556 (500)	27.3 (26.9)	2.75×10^{-5}	931	465	1.80
	1/15	R88G-VRSF15C400PCJ	200	15.8	83	333 (300)	45.4 (44.8)	3.00×10^{-5}	1176	588	2.20
	1/25	R88G-VRSF25C400PCJ	120	26.4	83	200 (180)	75.7 (74.7)	2.88×10^{-5}	1323	661	2.20

Note: 1. The values inside parentheses ( ) are for 100-V Servomotors.
Note: 2. The Decelerator inertia is the Servomotor shaft conversion value.
Note: 3. The protective structure for Servomotors with Decelerators satisfies IP44.
Note: 4. The allowable radial load is the value at the T/2 position.
Note: 5. The standard models have a straight shaft with a key.

Encoder, External Regeneration Resistors, Reactor and Parameter Unit Specifications

● Encoder Specifications

Incremental Encoders

Item	Specifications
Encoder system	Optical encoder
No. of output pulses	Phases A and B: 2,500 pulses/rotation, Phase Z: 1 pulse/rotation
Power supply voltage	5 VDC ±5%
Power supply current	180 mA (max.)
Output signals	+S, −S
Output interface	RS-485 compliance

Absolute Encoders

Item	Specifications
Encoder system	Optical encoder
	17 bits
No. of output pulses	Phases A and B: 32,768 pulses/rotation, Phase Z: 1 pulse/rotation
Maximum rotations	–32,768 to +32,767 rotations
Power supply voltage	5 VDC ±5%
Power supply current	110 mA (max.)
Applicable battery voltage	3.6 VDC
Current consumption of battery	180 μA for a maximum of 5 s right after power interruption 100 μA for operation during power interruption 3.6 μA when power is supplied to Servo Drive
Output signals	+S, −S
Output interface	RS-485 compliance

● External Regeneration Resistors Specifications

Model	Resistance	Nominal capacity	Regeneration absorption for 120°C temperature rise	Heat radiation condition	Thermal switch output specifications
R88A-RR08050S	50 Ω	80 W	20 W	Aluminum 250 × 250, Thickness: 3.0	Operating temperature: 150°C±5%, NC contact, Rated output: 30 VDC, 50 mA max.
R88A-RR080100S	100 Ω				
R88A-RR22047S1	47 Ω	220 W	70 W	Aluminum 350 × 350, Thickness: 3.0	Operating temperature: 170°C±5%, NC contact, Rated output: 250 VAC, 0.2 A max.
R88A-RR50020S	20 Ω	500 W	180 W	Aluminum 600 × 600, Thickness: 3.0	Operating temperature: 200°C±7%, NC contact, Rated output: 250 VAC, 0.2 A max. 24 VDC, 0.2 A max.

● Reactor Specifications

Servo Drive	Reactor				Reactor type
	Model	Rated current	Inductance	Weight	
R88D-GNA5L-ML2 R88D-GN01H-ML2	3G3AX-DL2002	1.6 A	21.4 mH	Approx. 0.8 kg	Single-phase
R88D-GN01L-ML2 R88D-GN02H-ML2	3G3AX-DL2004	3.2 A	10.7 mH	Approx. 1.0 kg	Single-phase
R88D-GN02L-ML2 R88D-GN04H-ML2	3G3AX-DL2007	6.1 A	6.75 mH	Approx. 1.3 kg	Single-phase
R88D-GN04L-ML2 R88D-GN08H-ML2 R88D-GN10H-ML2	3G3AX-DL2015	9.3 A	3.51 mH	Approx. 1.6 kg	Single-phase
R88D-GN15H-ML2	3G3AX-DL2022	13.8 A	2.51 mH	Approx. 2.1 kg	Single-phase
R88D-GN08H-ML2 R88D-GN10H-ML2 R88D-GN15H-ML2	3G3AX-AL2025	10.0 A	2.8 mH	Approx. 2.8 kg	Three-phase
R88D-GN20H-ML2 R88D-GN30H-ML2	3G3AX-AL2055	20.0 A	0.88 mH	Approx. 4.0 kg	Three-phase
R88D-GN50H-ML2	3G3AX-AL2110	34.0 A	0.35 mH	Approx. 5.0 kg	Three-phase
R88D-GN75H-ML2	3G3AX-AL2220	67.0 A	0.18 mH	Approx. 10.0 kg	Three-phase

● R88A-PR02G Parameter Unit Specifications

General Specifications

Item	Specifications
Operating ambient temperature **Operating ambient humidity**	0 to 55°C 90% max. (with no condensation)
Storage ambient temperature **Storage ambient humidity**	–20 to 80°C 90% max. (with no condensation)
Storage and operating atmosphere	No corrosive gases
Vibration resistance	5.9 m/s² max.

Performance Specifications

Item		Specifications
Type		Hand-held
Cable length		1.5 m
Connectors		Mini DIN 8-pin MD connector
Display		7-segment LED
External dimensions		62 × 114 × 15 mm (W × H × D)
Weight		Approx. 0.1 kg (including cable that is provided)
Communications specifications	**Standard**	RS-232
	Communications method	Asynchronous (ASYNC)
	Baud rate	9,600 bps
	Start bits	1 bit
	Data	8 bits
	Parity	None
	Stop bits	1 bit

Connections

● Control I/O Connector Specifications (CN1)

Control I/O Signal Connections and External Signal Processing

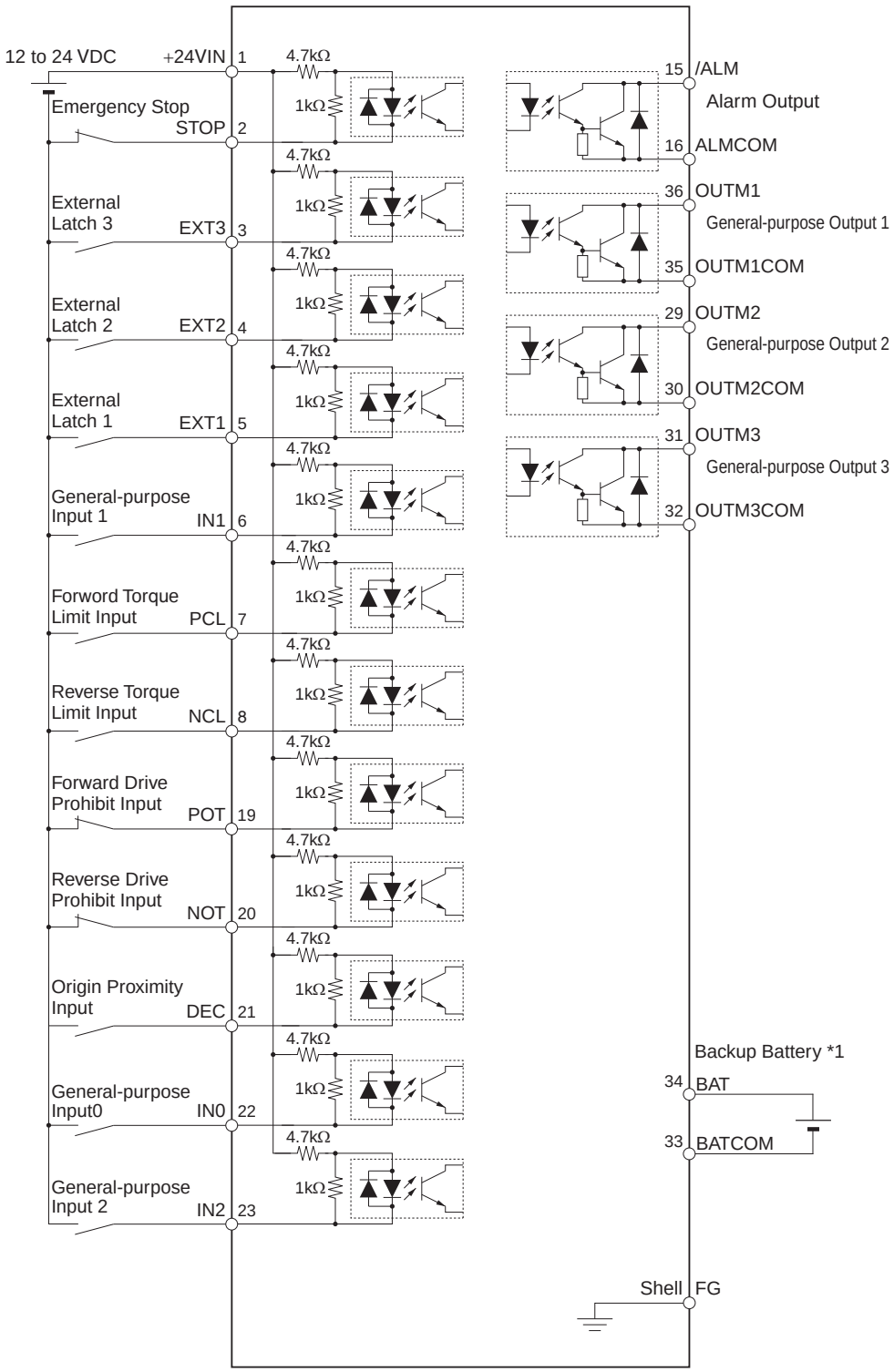

*1. If a backup battery is connected, a cable with a battery is not required.
*2. Inputs for pins 19 and 20 are determined by parameter settings. The diagram shows the default configuration.

● Peripheral Device Connection Examples

R88D-GNA5L-ML2/-GN01L-ML2/-GN02L-ML2/-GN04L-ML2

R88D-GN01H-ML2/-GN02H-ML2/-GN04H-ML2/-GN08H-ML2/-GN10H-ML2/-GN15H-ML2

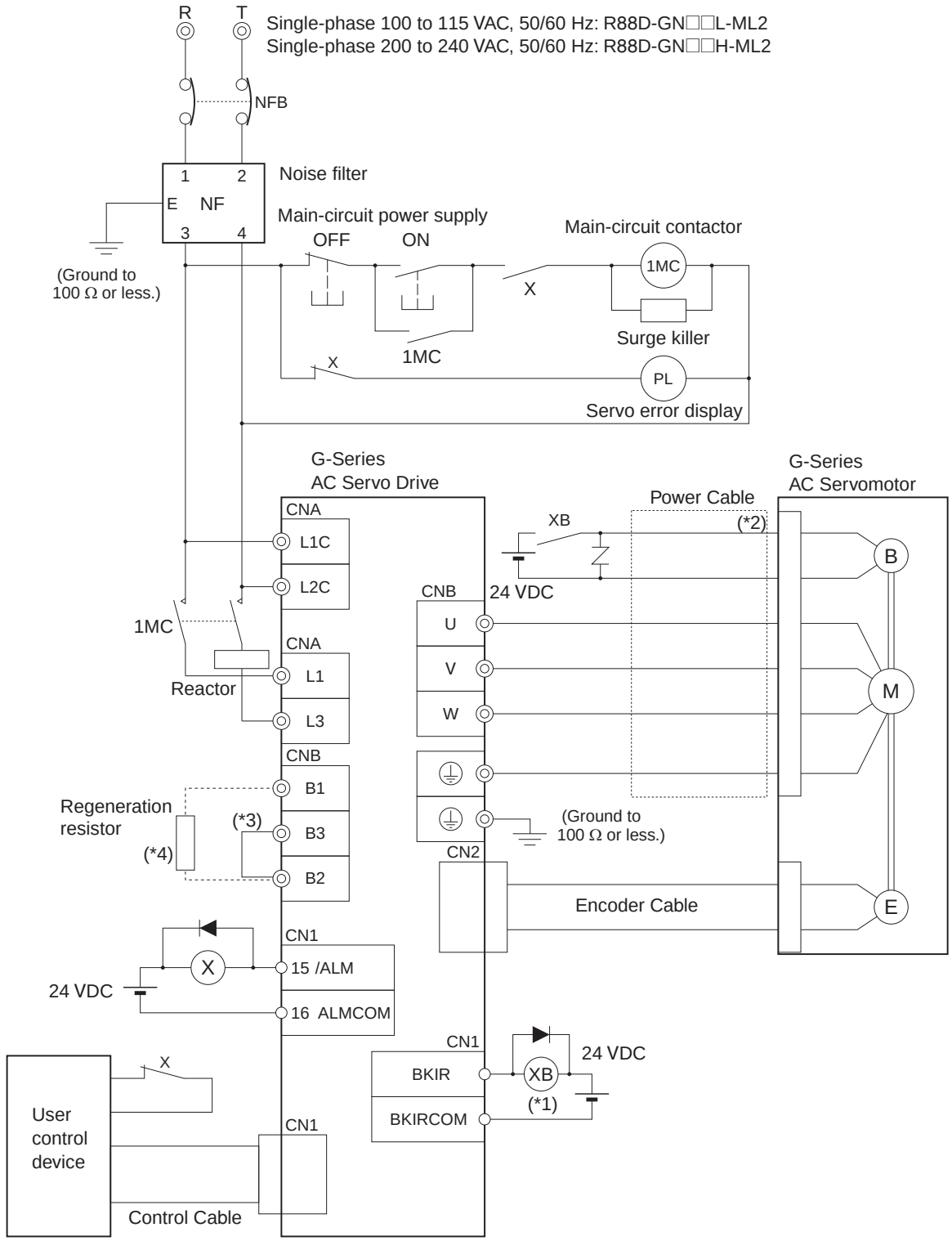

*1. Recommended relay: MY Relay (24 V), by OMRON. For example, the MY2 Relay's rated inductive load is 2 A at 24 VDC and applicable to all G-Series Servomotors with brakes.
*2. The brake is not affected by the polarity of the power supply.
*3. Connect B2-B3 for the models with a built-in regeneration resistor (GN04L-ML2, GN08H-ML2, GN10H-ML2, and GN15H-ML2). If the amount of regeneration is large, disconnect B2-B3 and connect an External Regeneration Resistor to B1-B2.
*4. The models GNA5L-ML2 to GN02L-ML2 and GN01H-ML2 to GN04H-ML2 do not have a built-in regeneration resistor. If the amount of regeneration is large, an External Regeneration Resistor must be connected to B1-B2.

R88D-GN08H-ML2/-GN10H-ML2/-GN15H-ML2

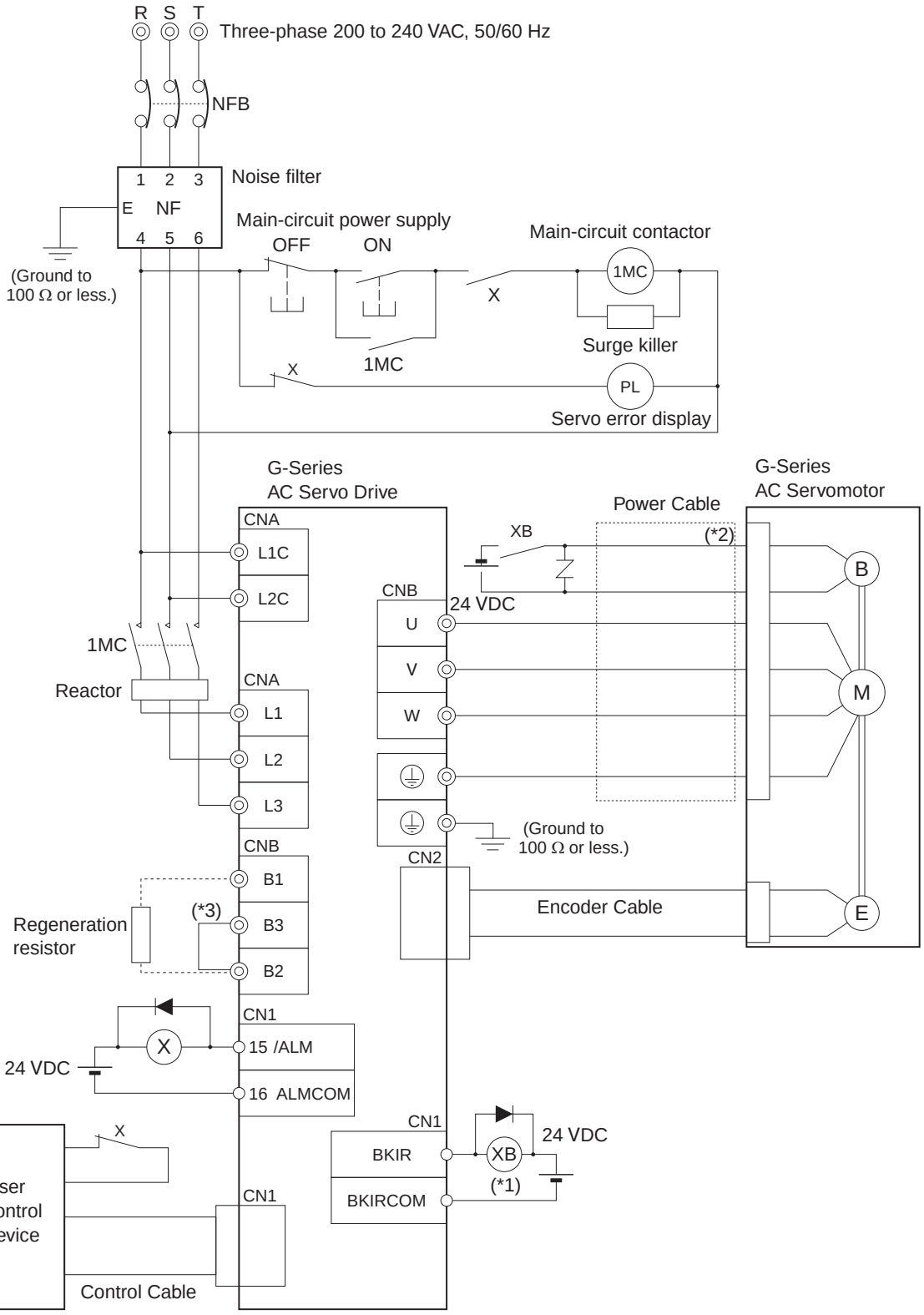

*1. Recommended relay: MY Relay (24 V), by OMRON. For example, the MY2 Relay's rated inductive load is 2 A at 24 VDC and applicable to all G-Series Servomotors with brakes.
*2. The brake is not affected by the polarity of the power supply.
*3. Connect B2-B3 for the models with a built-in regeneration resistor (GN08H-ML2 to GN15H-ML2).
If the amount of regeneration is large, disconnect B2-B3 and connect an External Regeneration Resistor to B1-B2.
*4. Connect B2-B3 for the models with a built-in regeneration resistor (GN08H-ML2 to GN15H-ML2).
If the amount of regeneration is large, disconnect B2-B3 and connect an External Regeneration Resistor to B1-B2.

R88D-GN20H-ML2/-GN30H-ML2/-GN50H-ML2

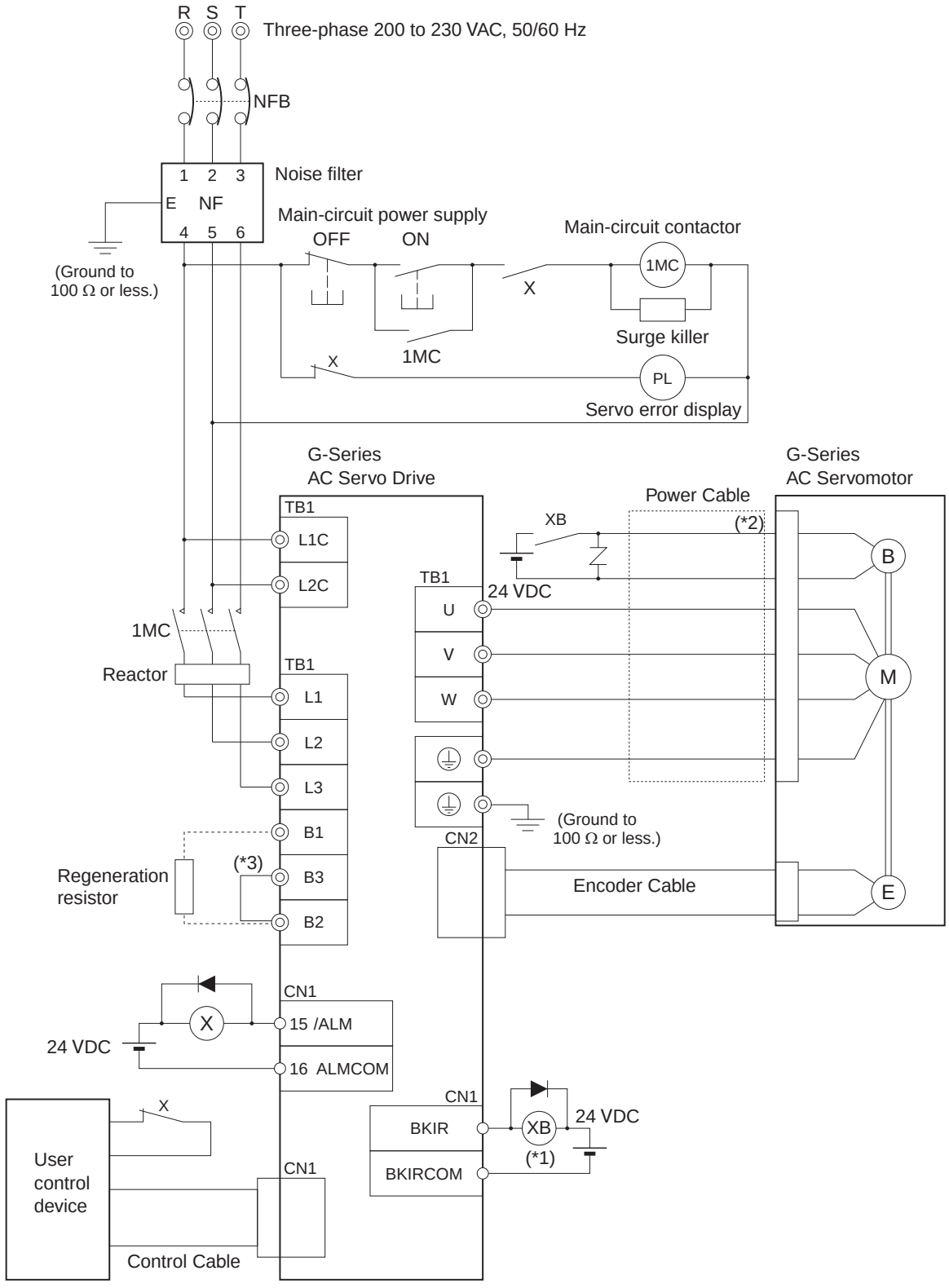

*1. Recommended relay: MY Relay (24 V), by OMRON. For example, the MY2 Relay's rated inductive load is 2 A at 24 VDC and applicable to all G-Series Servomotors with brakes.
*2. The brake is not affected by the polarity of the power supply.
*3. Connect B2-B3 for the models with a built-in regeneration resistor (GN08H-ML2 to GN15H-ML2).
If the amount of regeneration is large, disconnect B2-B3 and connect an External Regeneration Resistor to B1-B2.

R88D-GN75H-ML2

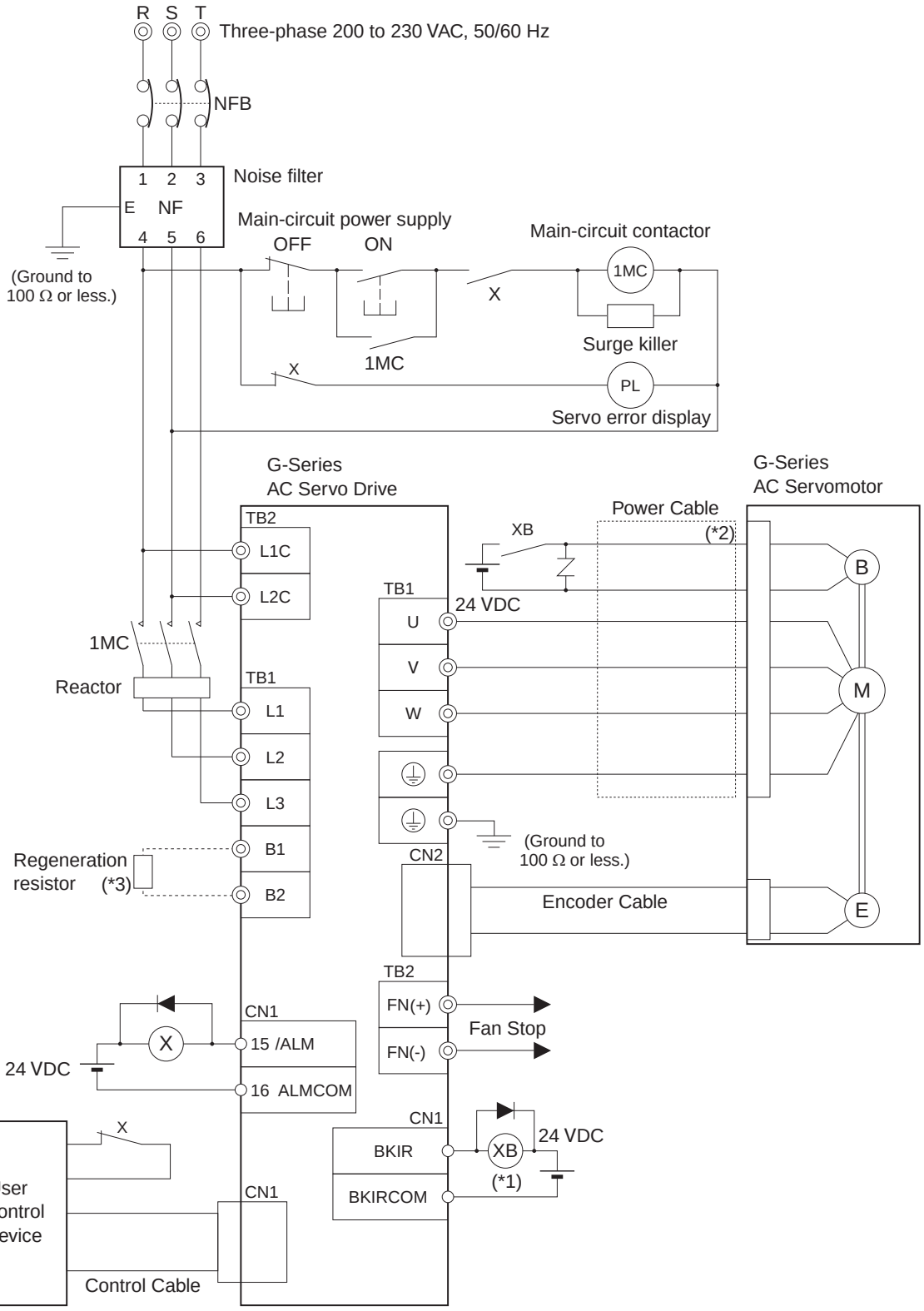

*1. Recommended relay: MY Relay (24 V), by OMRON. For example, the MY2 Relay's rated inductive load is 2 A at 24 VDC and applicable to all G-Series Servomotors with brakes.
*2. The brake is not affected by the polarity of the power supply.
*3. The model GN75H-ML2 does not have a built-in regeneration resistor.
If the amount of regeneration is large, an External Regeneration Resistor must be connected to B1-B2.

I/O Circuit Diagrams

Control Input Circuits

• Control Inputs

For the relay contact, use either a switch, or a transistor with an open-collector output.

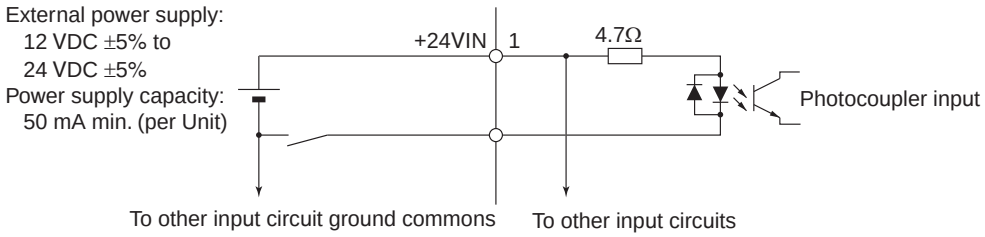

Signal Levels ON level: 10 V min.
OFF level: 3 V max.

Control Output Circuits

• Control Outputs

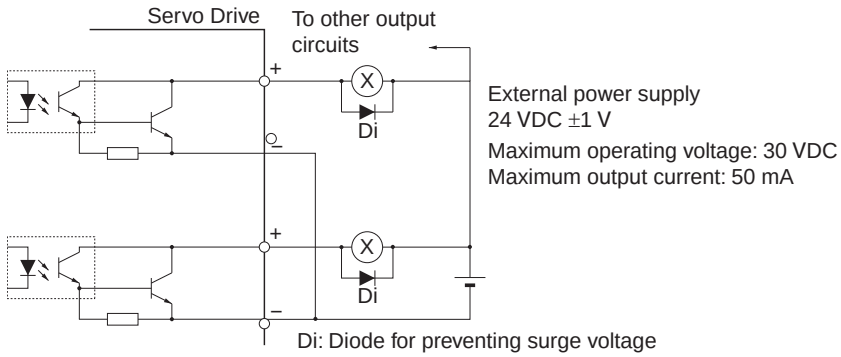

Di: Diode for preventing surge voltage
(Use high-speed diodes.)

Components and Functions

Servo Drive Part Names

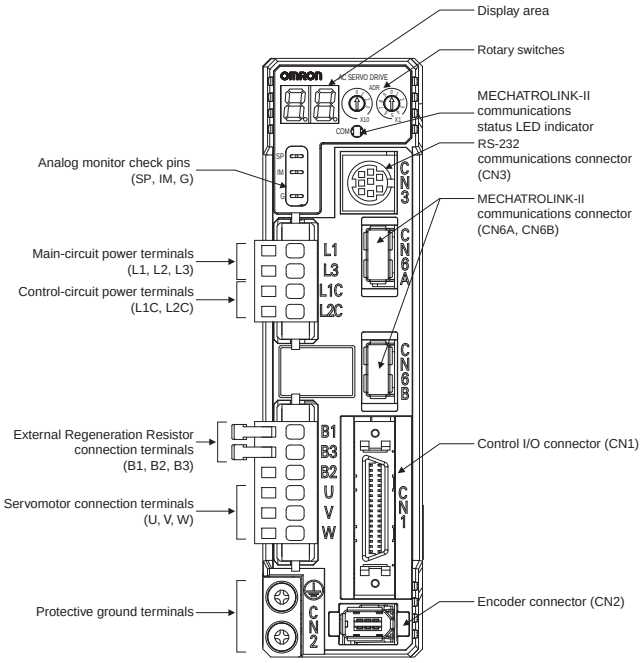

R88D-GNA5L-ML2/-GN01L-ML2/-GN02L-ML2 R88D-GN04L-ML2/-GN01H-ML2/-GN02H-ML2 R88D-GN04H-ML2/-GN08H-ML2/-GN10H-ML2 R88D-GN15H-ML2

• Main Circuit Connector (CNA)

Symbol	Name
L1	Main circuits power supply input
L2	
L3	
L1C	Control circuit power supply input
L2C	

• Servomotor Connector (CNB)

Symbol	Name
B1	External Regeneration Resistor connection terminals
B2	
B3	
U	Servomotor connection terminals
V	
W	
⏚	
⏚	Frame ground

R88D-GN20H-ML2/-GN30H-ML2/-GN50H-ML2

• Main Circuit Terminal Block Specifications

Symbol	Name
L1	Main circuit power supply input
L2	
L3	
L1C	Control circuit power supply input
L2C	
B1	External Regeneration Resistor connection terminals
B2	
B3	
U	Servomotor connection terminals
V	
W	
⏚	
⏚	Frame ground

R88D-GN75H-ML2

• Main Circuit Terminal Block Specifications (TB1)

Symbol	Name
L1	Main circuit power supply input
L2	
L3	
B1	External Regeneration Resistor connection terminals
B2	
U	Servomotor connection terminals
V	
W	
⏚	
⏚	Frame ground

• Main Circuit Terminal Block Specifications (TB2)

Symbol	Name
L1C	Control circuit power supply input
L2C	
⏚	Frame ground
FN (+)	Fan Stop Output
FN (–)	

Display Area

A 2-digit 7-segment LED display shows the Servo Drive status, alarm codes, parameters, and other information.

Analog Monitor Check Pins (SP, IM, and G)

The actual motor speed, command speed, torque, and number of accumulated pulses can be measured based on the analog voltage level by using an oscilloscope.
Set the type of signal to be output and the output voltage level by setting the Speed Monitor (SP) Selection (Pn007) and Torque Monitor (IM) Selection (Pn008).

MECHATROLINK-II Status LED Indicator

Indicates the communications status of the MECHATROLINK-II.

Rotary Switches

Sets the node address.

● CN1 Control Input Signals

Pin No.	Symbol	Name
1	+24VIN	12 to 24-VDC Power Supply Input
2	STOP	Emergency Stop Input
3	EXT3	External Latch Signal 3
4	EXT2	External Latch Signal 2
5	EXT1	External Latch Signal 1
6	IN1	External general-purpose Input 1
7	PCL	Forward Torque Limit Input
8	NCL	Reverse Torque Limit Input
19 to 20*	POT	Forward Drive Prohibit Input
	NOT	Reverse Drive Prohibit Input
21	DEC	Origin Proximity Input
22	IN0	External general-purpose Input 0
23	IN2	External general-purpose Input 2
34	BAT	Backup Battery Input ABS
33	BATCOM	

*Forward and reverse rotation over travel input.

● CN1 Control Output Signals

Pin No.	Symbol	Name
15	/ALM	Alarm Output
16	ALMCOM	
29	OUTM2	General-purpose Output 2 (READY)
30	OUTM2COM	
31	OUTM3	General-purpose Output 3 (CLIM)
32	OUTM3COM	
36	OUTM1	General-purpose Output 1 (BKIR)
35	OUTM1COM	

● Encoder Connector Specifications (CN2)

Pin No.	Symbol	Name
1	E5V	Encoder power supply +5 V
2	E0V	Encoder power supply GND
3	BAT+	Battery +
4	BAT–	Battery –
5	PS+	Encoder +phase S Input
6	PS–	Encoder –phase S Input
Shell	FG	Shield ground

● Parameter Unit Connector Specifications (CN3)

Pin No.	Symbol	Name
3	TXD	RS-232 send data
4	GND	Ground
5	RXD	RS-232 receive data

● Protective Functions

Error detection	
Control power supply undervoltage	
Overvoltage	
Undervoltage	
Overcurrent	
Overheating	
Overload	
Regeneration overload	
Encoder communications error	
Encoder communications data error	
Deviation counter overflow	
Overspeed	
Command error	
Internal deviation counter overflow	
Overrun limit error	
Parameter error	
Parameter corruption	
Drive prohibit input error	
Absolute encoder system down error	ABS
Absolute encoder counter overflow error	ABS
Absolute encoder overspeed error	ABS
Absolute encoder one-turn counter error	ABS
Absolute encoder multi-turn counter error	ABS
Absolute encoder status error	ABS
Encoder phase Z error	
Encoder PS signal error	
Node address setting error	
Communications error	
Transmission cycle error	
Watchdog data error	
Emergency stop input error	
Transmission cycle setting error	
SYNC command error	
Parameter setting error	
Servomotor non-conformity	

Parameter

● R88A-RP02G : Parameter Unit Part Names

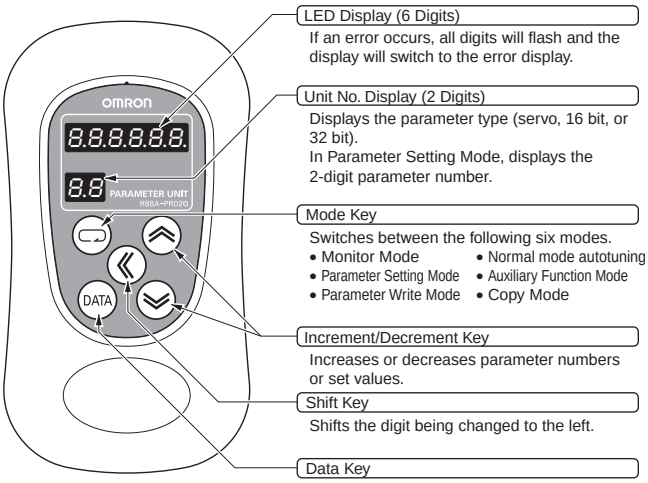

LED Display (6 Digits)
If an error occurs, all digits will flash and the display will switch to the error display.

Unit No. Display (2 Digits)
Displays the parameter type (servo, 16 bit, or 32 bit).
In Parameter Setting Mode, displays the 2-digit parameter number.

Mode Key
Switches between the following six modes.
- Monitor Mode
- Parameter Setting Mode
- Parameter Write Mode
- Normal mode autotuning
- Auxiliary Function Mode
- Copy Mode

Increment/Decrement Key
Increases or decreases parameter numbers or set values.

Shift Key
Shifts the digit being changed to the left.

Data Key
Switches between the parameter and setting displays, saves settings, etc.

● Servo Parameters

Parameter name	Explanation
Default Display	Selects the data to be displayed on the 7-segment LED display on the front panel.
Torque Limit Selection	Selects the torque limit function, or the torque feed-forward function during speed control.
Drive Prohibit Input Selection	Selects the function for the Forward and Reverse Drive Prohibit Inputs (CN1 POT: pin 19, NOT: pin 20).
Communications Control	Controls errors and warnings for MECHATROLINK-II communications.
Power ON Address Display Duration Setting	Sets the duration to display the node address when the control power is turned ON.
Speed Monitor (SP) Selection	Selects the output to the Analog Speed Monitor (SP on the front panel).
Torque Monitor (IM) Selection	Selects the output to the Analog Torque Monitor (IM on the front panel).
Prohibit Parameter Changes via Network	Allows/prohibits parameter changes via the network.
Operation Switch When Using Absolute Encoder	Selects how the absolute encoder is used.
RS-232 Baud Rate Setting	Sets the baud rate for RS-232 communications.
Position Loop Gain (RT)	Sets the position loop responsiveness.
Speed Loop Gain (RT)	Sets the speed loop responsiveness.
Speed Loop Integration Time Constant (RT)	Adjusts the speed loop integration time constant.
Speed Feedback Filter Time Constant (RT)	Sets the type of speed detection filter time constant. Normally, use a setting of 0.
Torque Command Filter Time Constant (RT)	Adjusts the first-order lag filter time constant for the torque command section.
Speed Feed-forward Amount (RT)	Sets the speed feed-forward amount.
Feed-forward Filter Time Constant (RT)	Sets the time constant for the speed feed-forward first-order lag filter.
Position Loop Gain 2 (RT)	Sets the position loop gain when using gain 2 switching.
Speed Loop Gain 2 (RT)	Sets the speed loop gain when using gain 2 switching.
Speed Loop Integration Time Constant 2 (RT)	Sets the speed loop integration time constant when using gain 2 switching.
Speed Feedback Filter Time Constant 2 (RT)	Sets the speed detection filter when using gain 2 switching.
Torque Command Filter Time Constant 2 (RT)	Sets the first-order lag filter time constant for the torque command section when using gain 2 switching.
Notch Filter 1 Frequency	Sets the notch frequency of notch filter 1 for resonance suppression.
Notch Filter 1 Width	Selects the notch width of notch filter 1 for resonance suppression.
Inertia Ratio (RT)	Selects the load inertia as a percentage of the Servomotor rotor inertia.
Realtime Autotuning Mode Selection	Sets the operating mode for realtime autotuning.
Realtime Autotuning Machine Rigidity Selection	Sets the machine rigidity for realtime autotuning.
Adaptive Filter Selection	Enables or disables the adaptive filter.
Vibration Filter Selection	Selects the vibration filter type and the switching mode.
Normal Mode Autotuning Operation Setting	Sets the operating pattern for normal mode autotuning.
Overrun Limit Setting	Sets the Servomotor's allowable operating range for the position command input range.
Instantaneous Speed Observer Setting (RT)	The Instantaneous Speed Observer improves speed detection accuracy, thereby improving responsiveness and reducing vibration when stopping.
Notch Filter 2 Frequency	Sets the notch frequency of notch filter 2 for resonance suppression.
Notch Filter 2 Width	Selects the notch width of notch filter 2 for resonance suppression.
Notch Filter 2 Depth	Selects the notch depth of notch filter 2 for resonance suppression.
Vibration Frequency 1	Sets the vibration frequency 1 for damping control to suppress vibration at the end of the load.
Vibration Filter 1 Setting	When setting Vibration Frequency 1 (Pn02B), reduce this setting if torque saturation occurs, or increase it to make the movement faster.
Vibration Frequency 2	Sets the vibration frequency 2 for damping control to suppress vibration at the end of the load.
Vibration Filter 2 Setting	Sets vibration filter 2 for damping control to suppress vibration at the end of the load.
Adaptive Filter Table Number Display	Displays the table entry number corresponding to the frequency of the adaptive filter.
Gain Switching Operating Mode Selection (RT)	Enables or disables gain switching.
Gain Switch Setting (RT)	Sets the trigger for gain switching. The details depend on the control mode.
Gain Switch Time (RT)	Enabled when the Gain Switch Setting (Pn031) is set to 3, or 5 to 10. Sets the lag time from the trigger detection to actual gain switching when switching from gain 2 to gain 1.
Gain Switch Level Setting (RT)	Sets the judgment level to switch between Gain 1 and Gain 2 when the Gain Switch Setting (Pn031) is set to 3, 5, 6, 9, or 10. The unit for the setting depends on the condition set in the Gain Switch Setting (Pn031).
Gain Switch Hysteresis Setting (RT)	Sets the hysteresis of the judgment level for the Gain Switch Level Setting (Pn033) when the Gain Switch Setting (Pn031) is set to 3, 5, 6, 9, or 10. The unit for the setting depends on the condition set for the Gain Switch Setting (Pn031).
Position Loop Gain Switching Time (RT)	This parameter can prevent the position loop gain from increasing suddenly when the position loop gain and position loop gain 2 differ by a large amount.
Jog Speed	Sets the jog operation speed with the Parameter Unit or CX-Drive.
Emergency Stop Input Setting	Enables the Emergency Stop Input (STOP).
Origin Proximity Input Logic Setting	Sets the logic for the Origin Proximity Input (DEC).

Parameter name	Explanation
Operating Direction Setting	Sets the relationship between polarity of operation data sent over the network and the direction of Servomotor rotation.
Input Signal Selection	Sets the terminal assignment for Drive Prohibit Input.
Speed Limit	Sets the speed limit for torque control mode.
Soft Start Acceleration Time	Sets the acceleration time for speed control mode.
Soft Start Deceleration Time	Sets the deceleration time for speed control mode.
Speed Limit Selection	Sets the speed limit for torque control mode.
No.1 Torque Limit	Sets the No.1 Torque Limit for the Servomotor output torque.
No.2 Torque Limit	Sets the No.2 Torque Limit for the Servomotor output torque.
Positioning Completion Range 1	Sets the positioning completion range when Positioning Completion 1 (INP1) Output is selected.
Speed Conformity Signal Output Width	Sets the detection width for the speed conformity detection (VCMP) signal.
Rotation Speed for Motor Rotation Detection	Sets the threshold level for the speed reached (TGON) signal.
Positioning Completion Range 2	Sets the positioning completion range when Positioning Completion 2 (INP2) is selected.
Motor Phase Current Offset Re-adjustment Setting	Enables or disables the offset component readjustment function of the Motor Phase Current Detector (CT) for Servo ON command inputs. The readjustment is made when control power is turned ON.
Undervoltage Alarm Selection	Selects whether to activate the main power supply undervoltage function (alarm code 13) when the main power supply is interrupted for the duration of the Momentary Hold Time (Pn06D) during Servo ON.
Stop Selection for Drive Prohibition Input	Sets the operation used to decelerate to a stop when the Forward Drive Prohibit Input (POT) or Reverse Drive Prohibit Input (NOT) is enabled.
Stop Selection with Main Power OFF	Sets the operation to be performed during deceleration and after stopping after the main power supply is turned OFF with the Undervoltage Alarm Selection (Pn065) set to 0. The deviation counter will be reset when the power OFF is detected.
Stop Selection for Alarm Generation	Sets the deceleration process and stop status after an alarm is issued by the protective function. The deviation counter will be reset when an alarm is issued.
Stop Selection with Servo OFF	Sets the operation after a Servo OFF. The relationship between set values, operation, and deviation counter processing for this parameter is the same as for the Stop Selection with Main Power OFF (Pn067).
Brake Timing when Stopped	Sets the duration from Brake Interlock (BKIR) signal detection to Servo OFF.
Brake Timing during Operation	Sets the duration from Servo OFF to when the Brake Interlock (BKIR) signal is turned OFF.
Regeneration Resistor Selection	Sets the regeneration resistor operation and the regeneration overload (alarm code 18) operation. Set this parameter to 0 if using the built-in regeneration resistor.
Momentary Hold Time	Sets the amount of time required to detect shutoff when the main power supply continues to shut off. The main power OFF detection will be disabled if this parameter is set to 1000.
Emergency Stop Torque	Sets the torque limit during deceleration because of the Drive Prohibition Input when the Stop Selection for Drive Prohibition Input (Pn066) is set to 2.
Overload Detection Level Setting	Sets the overload detection level.
Overspeed Detection Level Setting	Sets the overspeed detection level.

● 16-bit Positioning Parameters

Parameter name	Explanation
Backlash Compensation Selection	Enables or disables the backlash compensation for position control, and sets the compensation direction.
Backlash Compensation	Sets the backlash compensation amount for position control.
Backlash Compensation Time Constant	Sets the backlash compensation time constant for position control.
Soft Limit	Enables or disables the soft limit.
Origin Range	Sets the threshold for detecting the origin (ZPOINT) in absolute values.
Linear Acceleration Constant	Sets the acceleration for positioning operations.
Linear Deceleration Constant	Sets the deceleration for positioning operations.
Moving Average Time	Sets the moving average time for position commands.
Origin Return Mode Settings	Sets the direction for origin return.
Origin Return Approach Speed 1	Sets the operating speed for origin return, from when the origin proximity signal is turned ON, to when it is turned OFF and the latch signal is detected.
Origin Return Approach Speed 2	Sets the operating speed for origin return, from when the latch signal is detected, to when the Origin Return Final Distance (Pn204) is reached.
General-purpose Output 1 Function Selection	Selects the function for general-purpose output 1 (OUTM1).
General-purpose Output 2 Function Selection	Selects the function for general-purpose output 2 (OUTM2). The set values and the functions are the same as for general-purpose output 1 (OUTM1).
General-purpose Output 3 Function Selection	Selects the function for general-purpose output 3 (OUTM3). The set values and the functions are the same as for general-purpose output 1 (OUTM1).

● 32-bit Positioning Parameters

Parameter name	Explanation
Absolute Origin Offset	Sets the offset amount for the encoder position and the mechanical coordinate system position when using an absolute encoder.
Forward Software Limit	Sets the soft limit in the forward direction.
Reverse Software Limit	Sets the soft limit for the reverse direction.
Final Distance for External Input Positioning	Sets the distance to travel after detecting the latch signal input position when performing external input positioning.
Origin Return Final Distance	Sets the distance from the latch signal input position to the origin when performing origin return.
Electronic Gear Ratio 1 (Numerator)	Sets the numerator for the electronic gear ratio.
Electronic Gear Ratio 2 (Denominator)	Sets the denominator for the electronic gear ratio.
Deviation Counter Overflow Level	Sets the deviation counter overflow level.

Dimensions

(Unit: mm)

●Servo Drives

- **Single-phase 100 VAC (50 to 100 W)**
  R88D-GNA5L-ML2
  R88D-GN01L-ML2
- **Single-phase 200 VAC (50 to 200 W)**
  R88D-GN01H-ML2
  R88D-GN02H-ML2

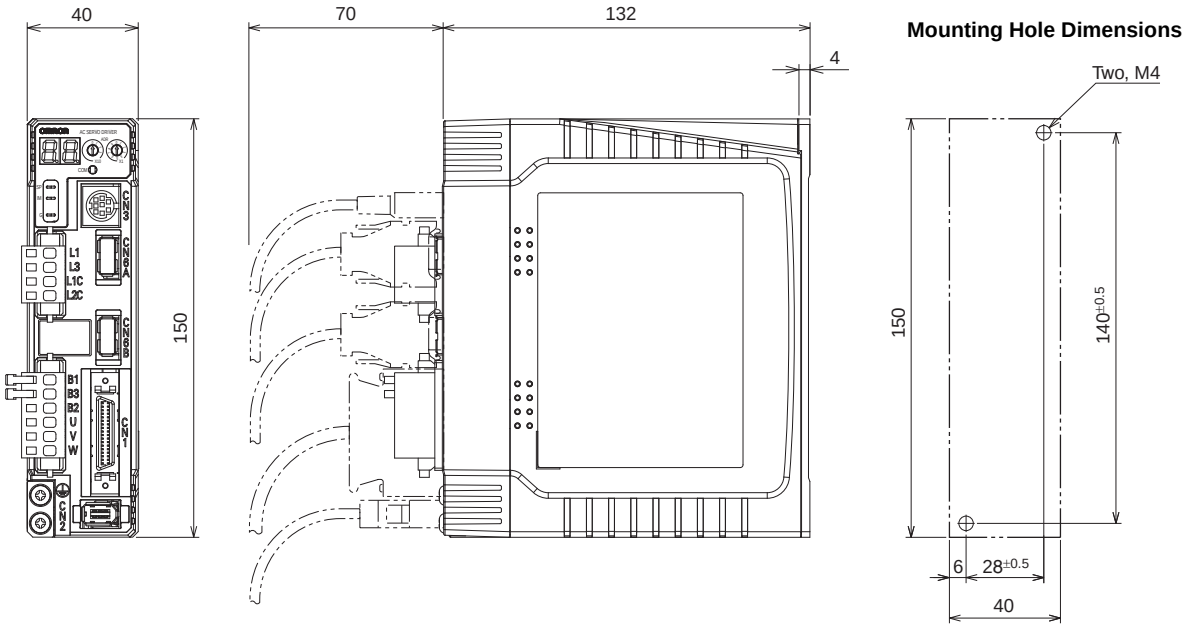

- **Single-phase 100 VAC (200 W)**
  R88D-GN02L-ML2
- **Single-phase 200 VAC (400 W)**
  R88D-GN04H-ML2

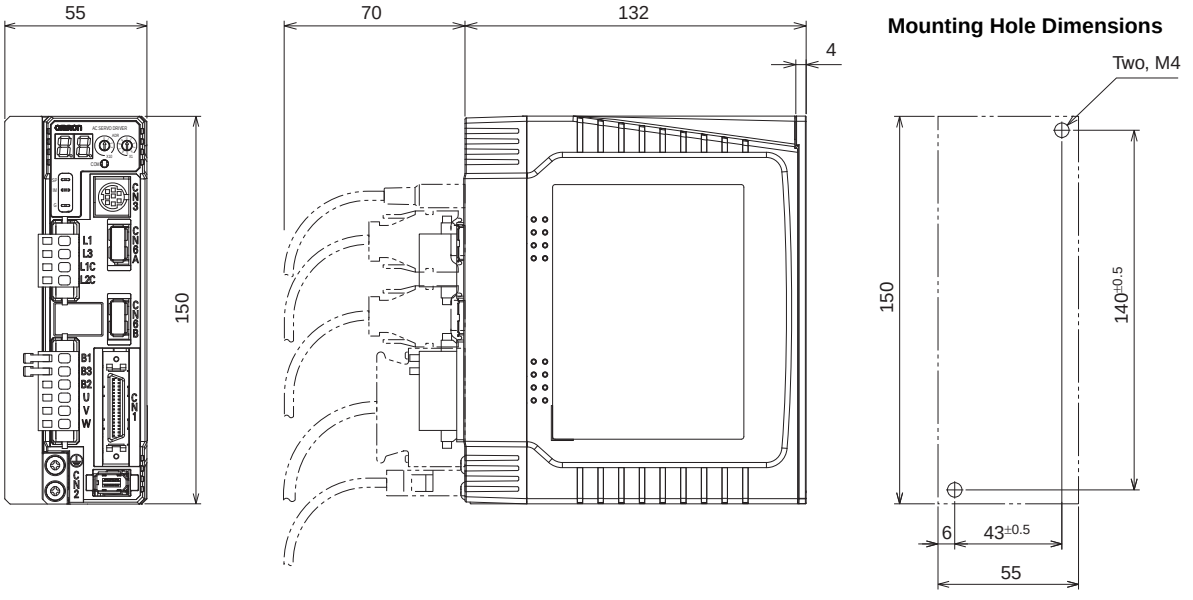

- **Single-phase 100 VAC (400 W)**
  R88D-GN04L-ML2
- **Single-phase/Three-phase 200 VAC (750 W)**
  R88D-GN08H-ML2

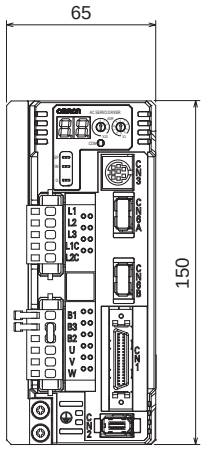

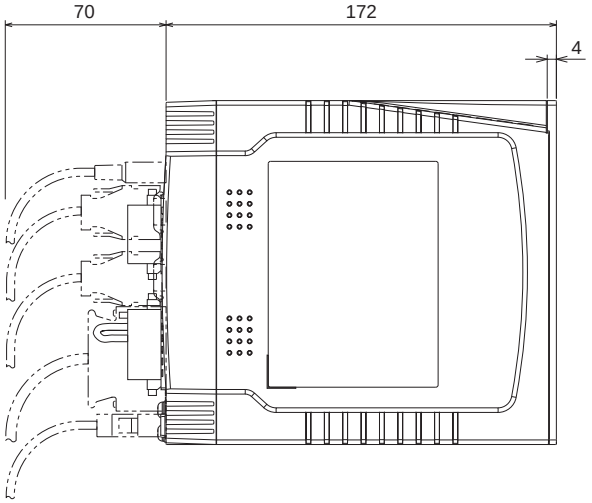

Mounting Hole Dimensions

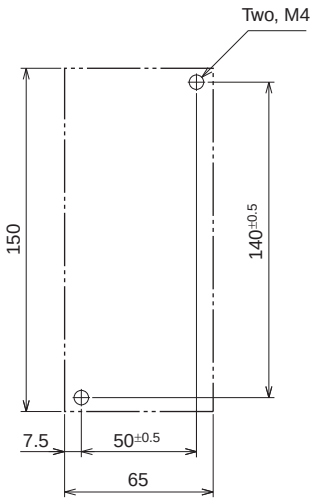

- **Single-phase/Three-phase 200 VAC (900 W to 1.5 kW)**
  R88D-GN10H-ML2
  R88D-GN15H-ML2

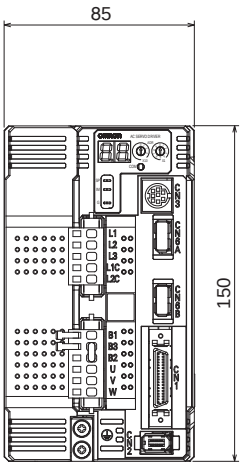

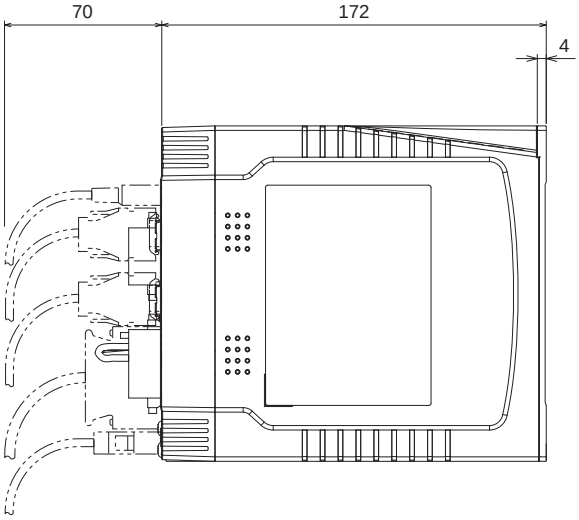

Mounting Hole Dimensions

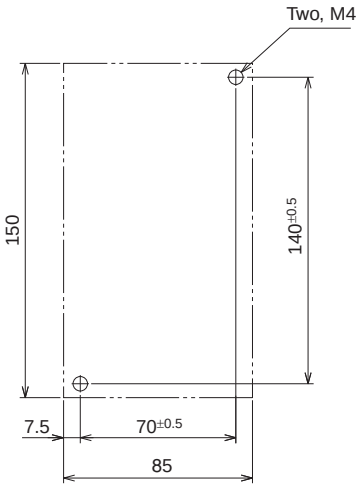

- **Three-phase 200 VAC (2 kW)**
  R88D-GN20H-ML2

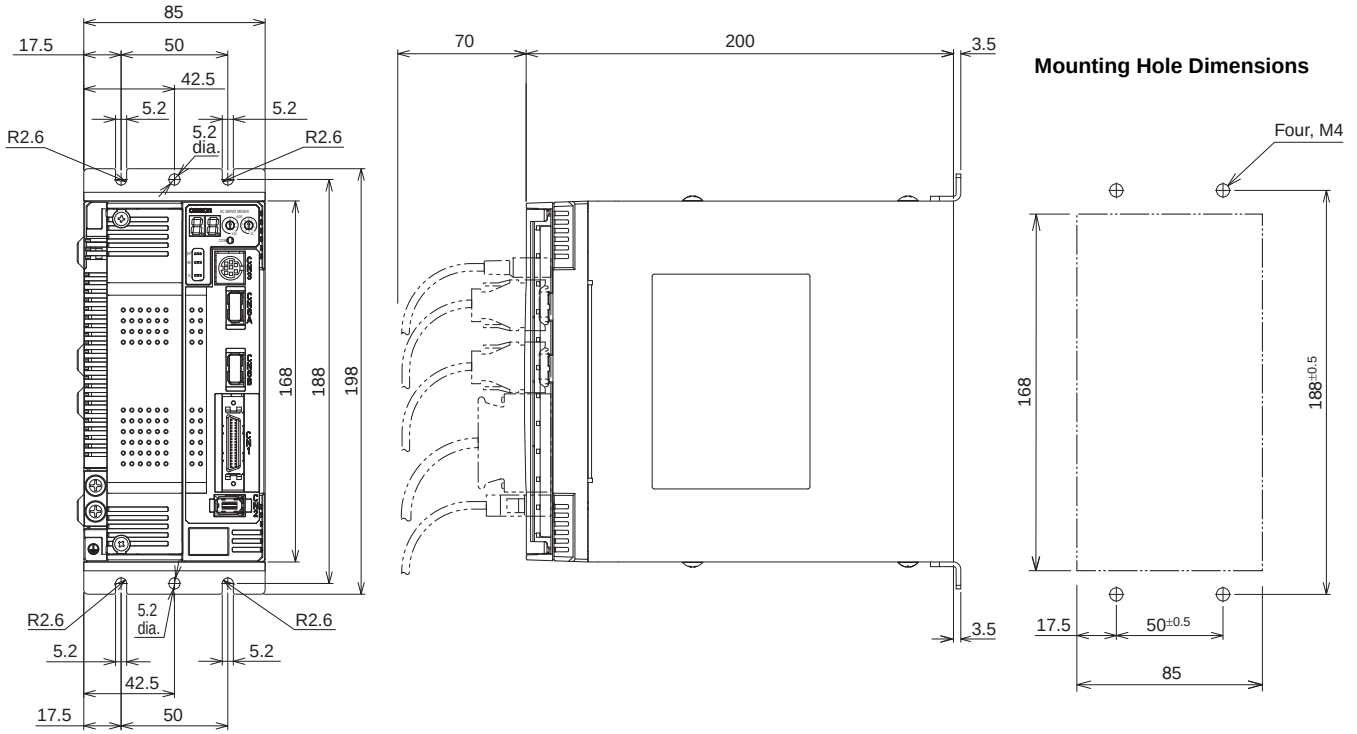

- **Three-phase 200 VAC (2 to 5 kW)**
  R88D-GN30H-ML2
  R88D-GN50H-ML2

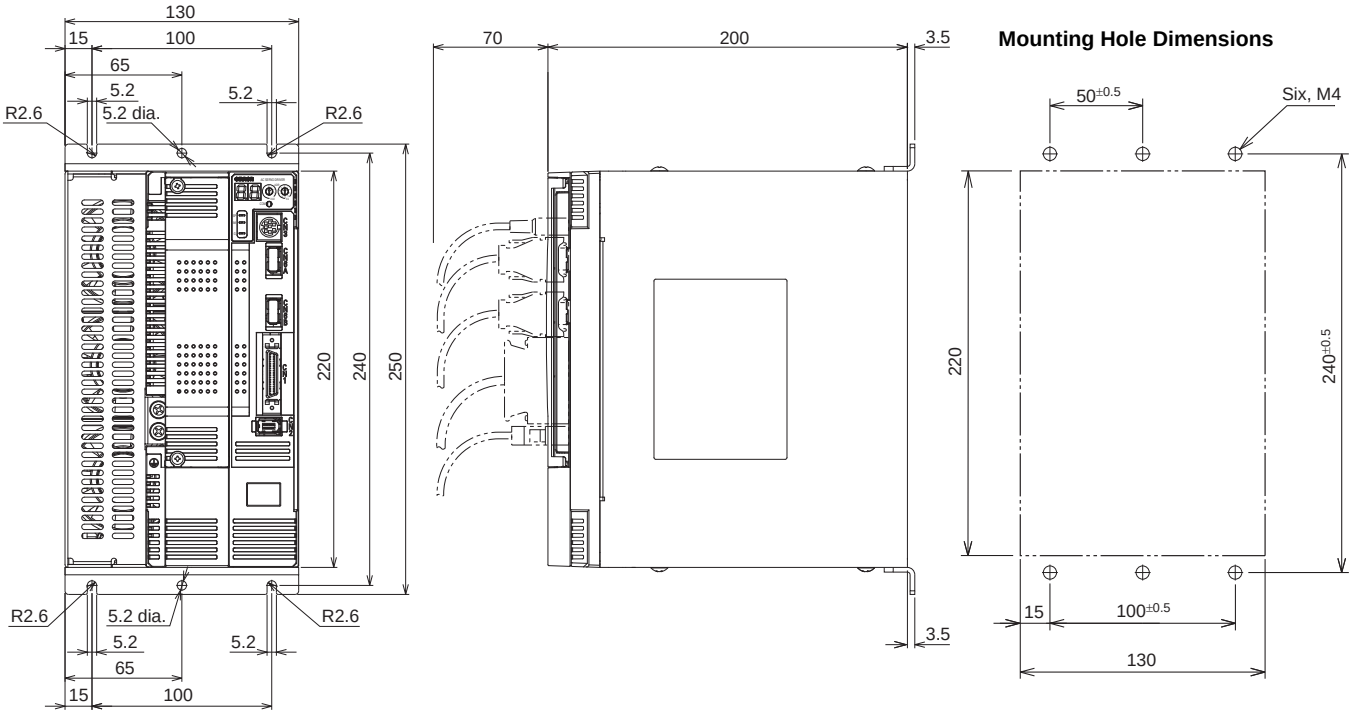

- **Three-phase 200 VAC (7.5 kW)**
  R88D-GN75H-ML2
  Front Panel Mounting (Using Mounting Brackets)

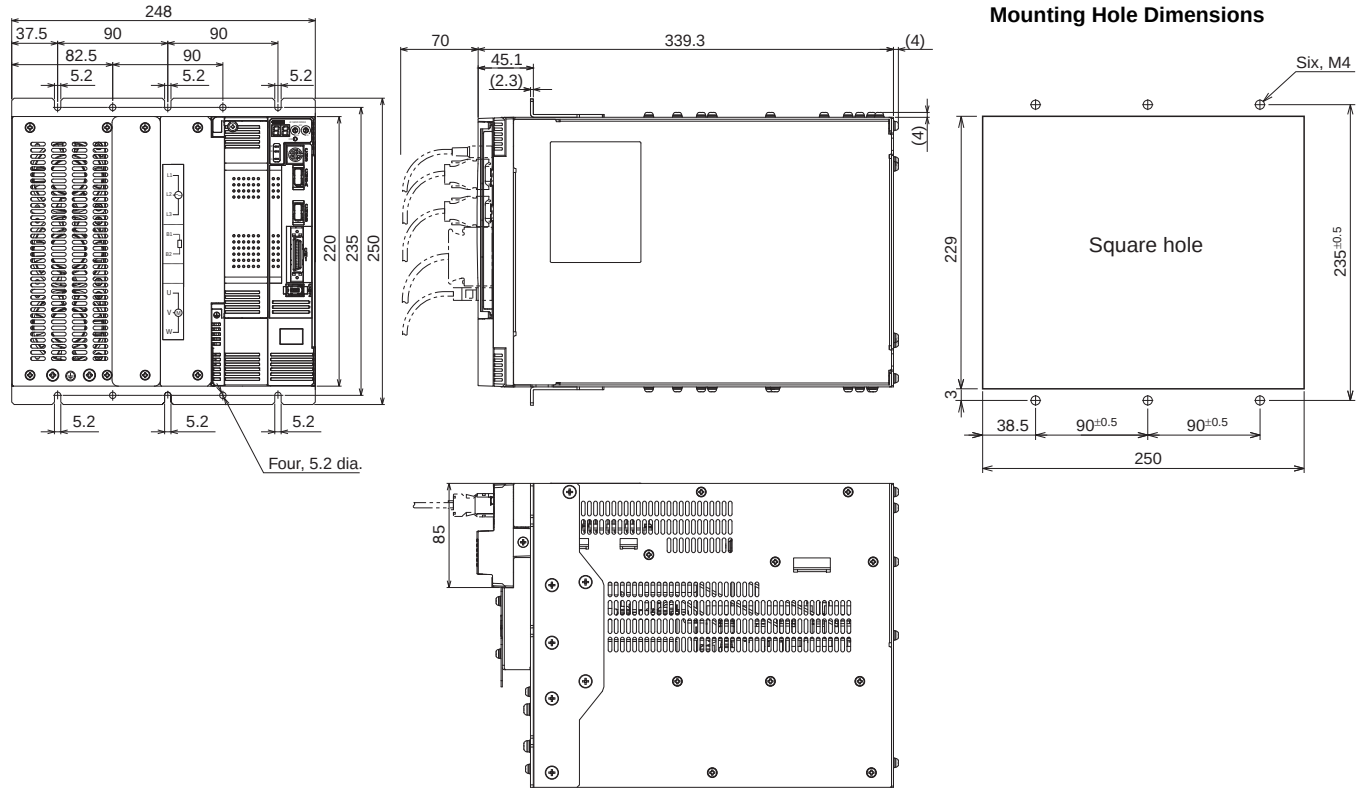

3,000-r/min Cylindrical Servomotors

• 50 W/100 W

INC

R88M-G05030H (-S2)
R88M-G10030L (-S2)
R88M-G10030H (-S2)
R88M-G05030H-B (S2)
R88M-G10030L-B (S2)
R88M-G10030H-B (S2)

ABS

R88M-G05030T (-S2)
R88M-G10030S (-S2)
R88M-G10030T (-S2)
R88M-G05030T-B (S2)
R88M-G10030S-B (S2)
R88M-G10030T-B (S2)

Model	LL	LN
R88M-G05030□	72	26.5
R88M-G10030□	92	46.5
R88M-G05030□-B	102	26.5
R88M-G10030□-B	122	46.5

*The empty bax in the L, H, L, T or S.
Note: The standard models have a straight shaft. A model with a key and tap is indicated by adding “S2” to the end of the model number.

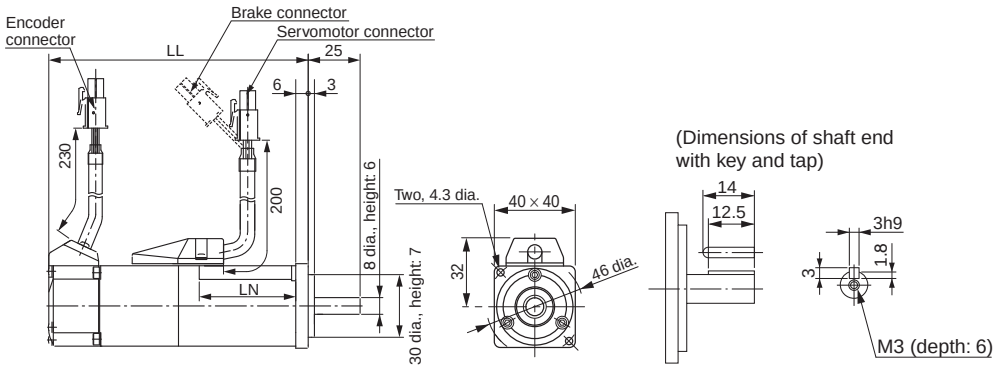

• 200 W/400 W/750 W

INC

R88M-G20030L (-S2)
R88M-G40030L (-S2)
R88M-G20030H (-S2)
R88M-G40030H (-S2)
R88M-G75030H (-S2)
R88M-G20030L-B (S2)
R88M-G40030L-B (S2)
R88M-G20030H-B (S2)
R88M-G40030H-B (S2)
R88M-G75030H-B (S2)

ABS

R88M-G20030S (-S2)
R88M-G40030S (-S2)
R88M-G20030T (-S2)
R88M-G40030T (-S2)
R88M-G75030T (-S2)
R88M-G20030S-B (S2)
R88M-G40030S-B (S2)
R88M-G20030T-B (S2)
R88M-G40030T-B (S2)
R88M-G75030T-B (S2)

Model	LL	LR	S	D1	D2	C	G	Z	KL1	QK	b	h	M	t1	L
R88M-G20030□	79.5	30	11	70	50	60	6.5	4.5	43	18	4h9	4	M4	2.5	8
R88M-G40030□	99		14							22.5	5h9	5	M5	3	10
R88M-G75030□	112.2	35	19	90	70	80	8	6	53	22	6h9	6		3.5	
R88M-G20030□-B	116	30	11	70	50	60	6.5	4.5	43	18	4h9	4	M4	2.5	8
R88M-G40030□-B	135.5		14							22.5	5h9	5	M5	3	10
R88M-G75030□-B	149.2	35	19	90	70	80	8	6	53	22	6h9	6		3.5	

*The empty bax in the L, H, L, T or S.
Note: The standard models have a straight shaft. A model with a key and tap is indicated by adding “S2” to the end of the model number.

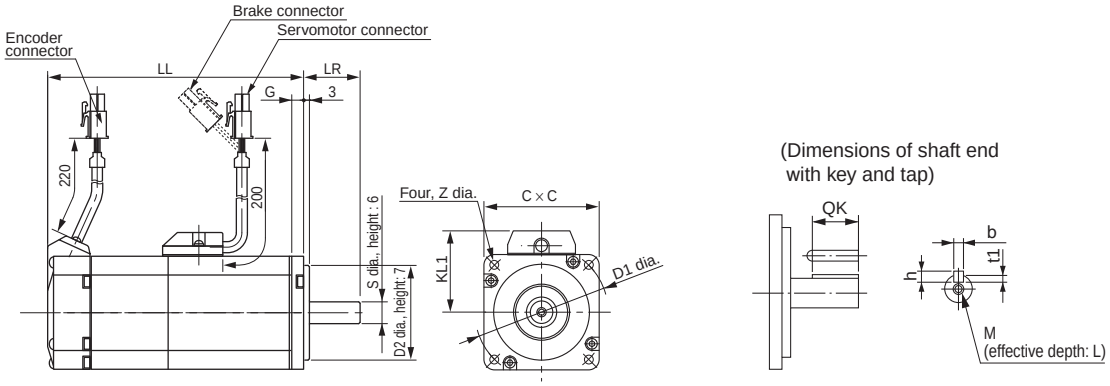

• **1 kW/1.5 kW/2 kW**

ABS

R88M-G1K030T (-S2)
R88M-G1K530T (-S2)
R88M-G2K030T (-S2)
R88M-G1K030T-B (S2)
R88M-G1K530T-B (S2)
R88M-G2K030T-B (S2)

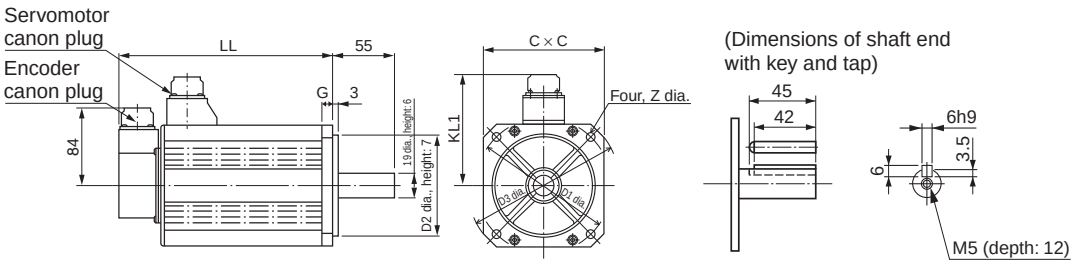

Model	LL	D1	D2	C	D3	G	KL1	Z
R88M-G1K030T	175	100	80	90	120	7	98	6.6
R88M-G1K530T	180	115	95	100	135	10	103	9
R88M-G2K030T	205							
R88M-G1K030T-B	200	100	80	90	120	7	98	6.6
R88M-G1K530T-B	205	115	95	100	135	10	103	9
R88M-G2K030T-B	230							

Note: The standard models have a straight shaft.
A model with a key and tap is indicated by adding “S2” to the end of the model number.

• **3 kW**

ABS

R88M-G3K030T (-S2)
R88M-G3K030T-B (S2)

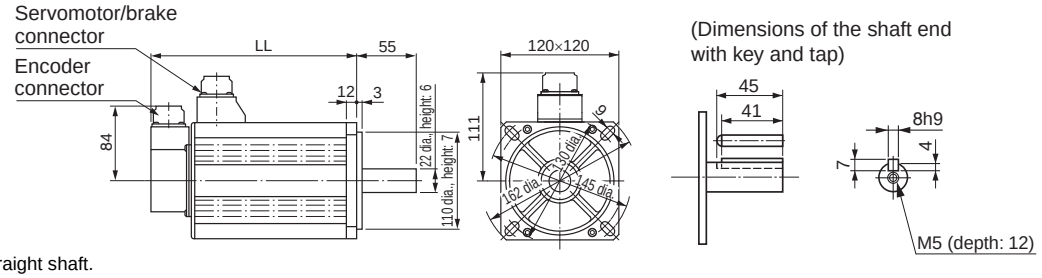

Model	LL
R88M-G3K030T	217
R88M-G3K030T-B	242

Note: The standard models have a straight shaft.
A model with a key and tap is indicated by adding “S2” to the end of the model number.

• **4 kW/5 kW**

ABS

R88M-G4K030T (-S2)
R88M-G5K030T (-S2)
R88M-G4K030T-B (S2)
R88M-G5K030T-B (S2)

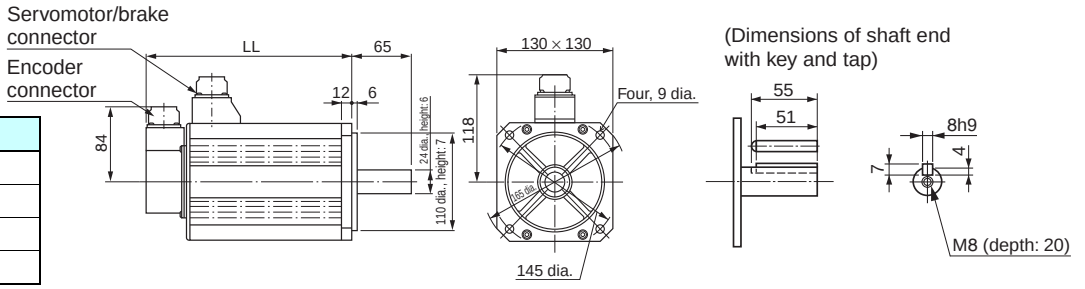

Model	LL
R88M-G4K030T	240
R88M-G5K030T	280
R88M-G4K030T-B	265
R88M-G5K030T-B	305

Note: The standard models have a straight shaft.
A model with a key and tap is indicated by adding “S2” to the end of the model number.

3,000-r/min Flat Servomotors

- **100 W/200 W/400 W**

INC	ABS
R88M-GP10030L (-S2)	R88M-GP10030S (-S2)
R88M-GP20030L (-S2)	R88M-GP20030S (-S2)
R88M-GP40030L (-S2)	R88M-GP40030S (-S2)
R88M-GP10030H (-S2)	R88M-GP10030T (-S2)
R88M-GP20030H (-S2)	R88M-GP20030T (-S2)
R88M-GP40030H (-S2)	R88M-GP40030T (-S2)
R88M-GP10030L-B (S2)	R88M-GP10030S-B (S2)
R88M-GP20030L-B (S2)	R88M-GP20030S-B (S2)
R88M-GP40030L-B (S2)	R88M-GP40030S-B (S2)
R88M-GP10030H-B (S2)	R88M-GP10030T-B (S2)
R88M-GP20030H-B (S2)	R88M-GP20030T-B (S2)
R88M-GP40030H-B (S2)	R88M-GP40030T-B (S2)

Model	LL	LR	S	D1	D2	C	F	G	KL1	Z	QK	b	h	t1	M	L
R88M-GP10030L R88M-GP10030H	60.5	25	8	70	50	60	3	7	43	4.5	12.5	3h9	3	1.8	M3	6
R88M-GP10030S R88M-GP10030T	87.5															
R88M-GP20030L R88M-GP20030H	67.5	30	11	90	70	80	5	8	53	5.5	18	4h9	4	2.5	M4	8
R88M-GP20030S R88M-GP20030T	94.5															
R88M-GP40030L R88M-GP40030H	82.5		14								22.5	5h9	5	3.0	M5	10
R88M-GP40030S R88M-GP40030T	109.5															
R88M-GP10030L-B R88M-GP10030H-B	84.5	25	8	70	50	60	3	7	43	4.5	12.5	3h9	3	1.8	M3	6
R88M-GP10030S-B R88M-GP10030T-B	111.5															
R88M-GP20030L-B R88M-GP20030H-B	100	30	11	90	70	80	5	8	53	5.5	18	4h9	4	2.5	M4	8
R88M-GP20030S-B R88M-GP20030T-B	127															
R88M-GP40030L-B R88M-GP40030H-B	115		14								22.5	5h9	5	3.0	M5	10
R88M-GP40030S-B R88M-GP40030T-B	142															

Note: The standard models have a straight shaft. A model with a key and tap is indicated by adding “S2” to the end of the model number.

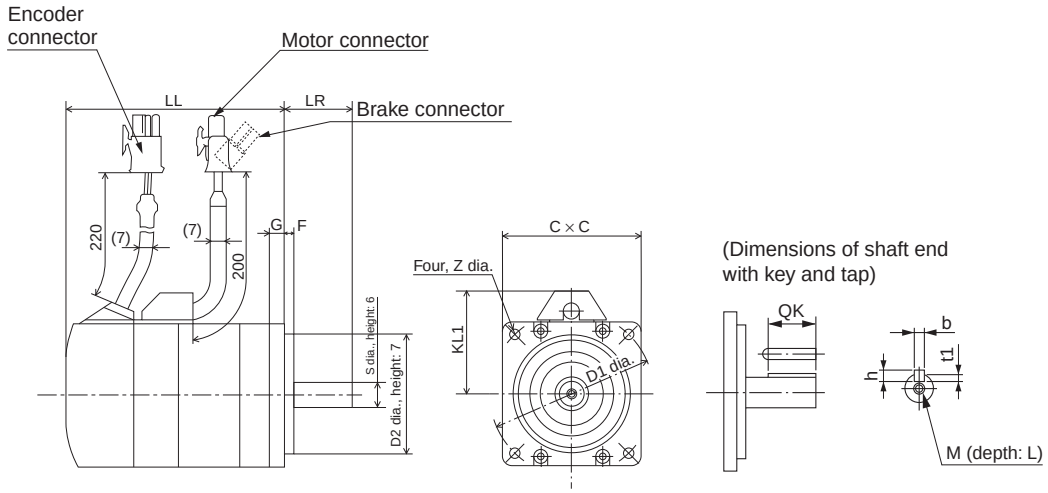

2,000-r/min Cylindrical Servomotors

• 200 VAC: 1 kW/1.5 kW

ABS

R88M-G1K020T (-S2)
R88M-G1K520T (-S2)
R88M-G1K020T-B (S2)
R88M-G1K520T-B (S2)

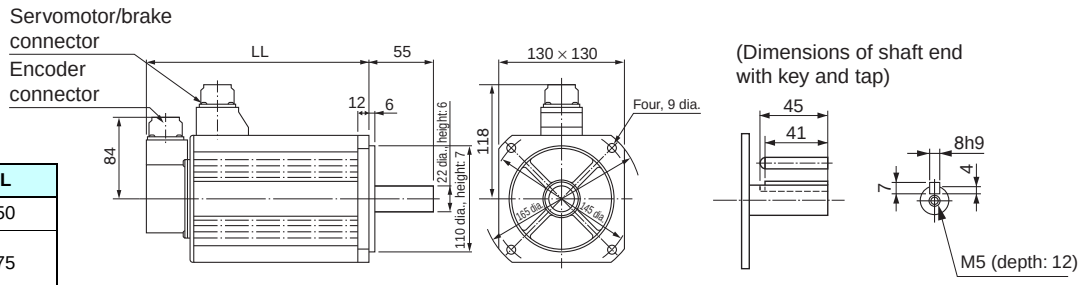

Model	LL
R88M-G1K020T	150
R88M-G1K520T	175
R88M-G1K020T-B	
R88M-G1K520T-B	200

Note: The standard models have a straight shaft.
A model with a key and tap is indicated by adding “S2” to the end of the model number.

• 200 VAC: 2 kW/3 kW

ABS

R88M-G2K020T (-S2)
R88M-G3K020T (-S2)
R88M-G2K020T-B (S2)
R88M-G3K020T-B (S2)

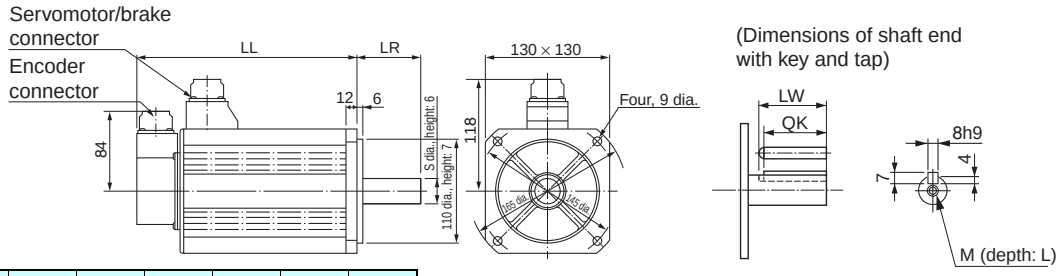

Model	LL	LR	S	LW	QK	M	L
R88M-G2K020T	200	55	22	45	41	M5	12
R88M-G3K020T	250	65	24	55	51	M8	20
R88M-G2K020T-B	225	55	22	45	41	M5	12
R88M-G3K020T-B	275	65	24	55	51	M8	20

Note: The standard models have a straight shaft.
A model with a key and tap is indicated by adding “S2” to the end of the model number.

• 200 VAC : 4 kW/5 kW

ABS

R88M-G4K020T (-S2)
R88M-G5K020T (-S2)
R88M-G4K020T-B (S2)
R88M-G5K020T-B (S2)

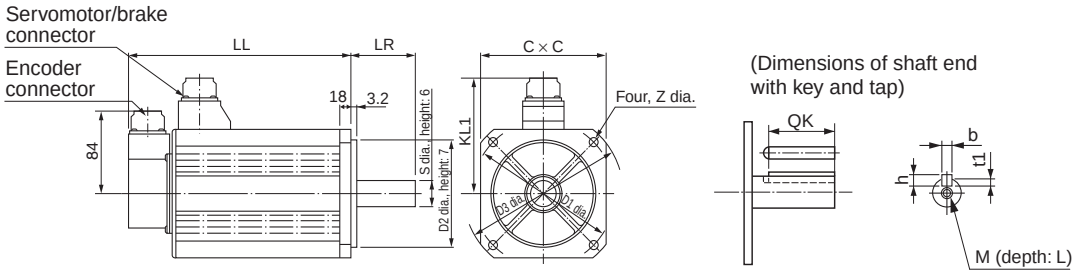

Model	LL	LR	S	D1	D2	C	D3	KL1	Z	QK	b	h	t1	M	L
R88M-G4K020T	242	65	28	165	130	150	190	128	11	51	8h9	7	4	M8	20
R88M-G5K020T	225	70	35	200	114.3	176	233	143	13.5	50	10h9	8	5	M12	25
R88M-G4K020T-B	267	65	28	165	130	150	190	128	11	51	8h9	7	4	M8	20
R88M-G5K020T-B	250	70	35	200	114.3	176	233	143	13.5	50	10h9	8	5	M12	25

Note: The standard models have a straight shaft. A model with a key and tap is indicated by adding “S2” to the end of the model number.

1,500-r/min Cylindrical Servomotors

- **7.5 kW**

ABS

R88M-G7K515T (-S2)
R88M-G7K515T-B (S2)

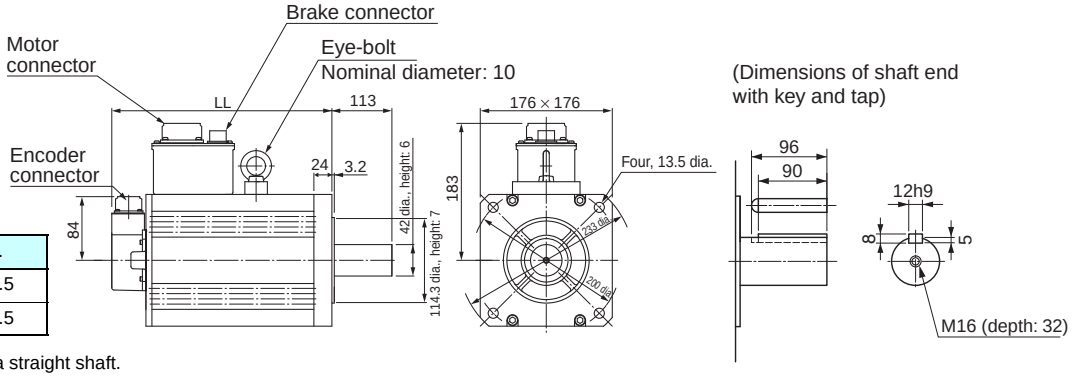

Model	LL
R88M-G7K515T	340.5
R88M-G7K515T-B	380.5

Note: The standard models have a straight shaft.
A model with a key and tap is indicated by adding “S2” to the end of the model number.

1,000-r/min Cylindrical Servomotors

- **900 W/2 kW**

ABS

R88M-G90010T (-S2)
R88M-G2K010T (-S2)
R88M-G90010T-B (S2)
R88M-G2K010T-B (S2)

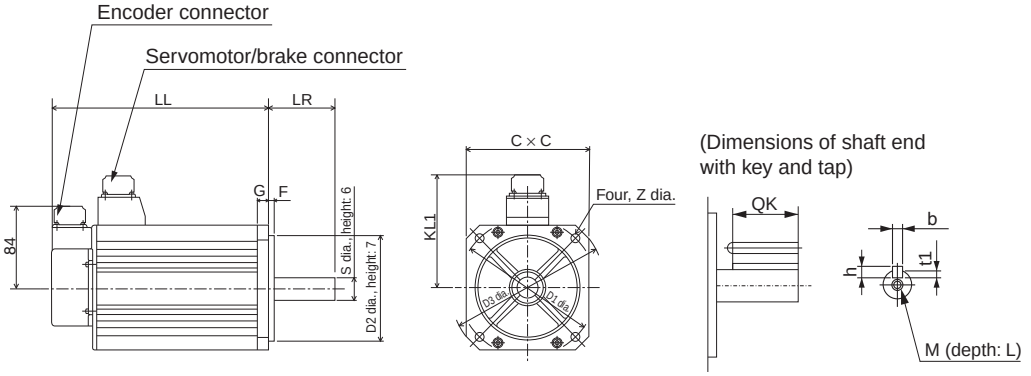

Model	LL	LR	S	D1	D2	C	D3	F	G	KL1	Z	QK	b	h	t1	M	L
R88M-G90010T	175	70	22	145	110	130	165	6	12	118	9	41	8h9	7	4	M5	12
R88M-G2K010T	182	80	35	200	114.3	176	233	3.2	18	143	13.5	50	10h9	8	5	M12	25
R88M-G90010T-B	200	70	22	145	110	130	165	6	12	118	9	41	8h9	7	4	M5	12
R88M-G2K010T-B	207	80	35	200	114.3	176	233	3.2	18	143	13.5	50	10h9	8	5	M12	25

Note: The standard models have a straight shaft. A model with a key and tap is indicated by adding “S2” to the end of the model number.

- **3 kW**

ABS

R88M-G3K010T (-S2)
R88M-G3K010T-B (S2)

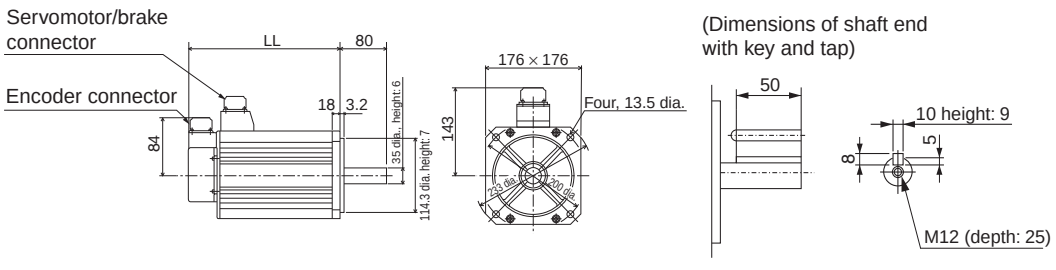

Model	LL
R88M-G3K010T	222
R88M-G3K010T-B	271

Note: The standard models have a straight shaft.
A model with a key and tap is indicated by adding “S2” to the end of the model number.

• **4.5 kW**

ABS

R88M-G4K510T (-S2)
R88M-G4K510T-B (S2)

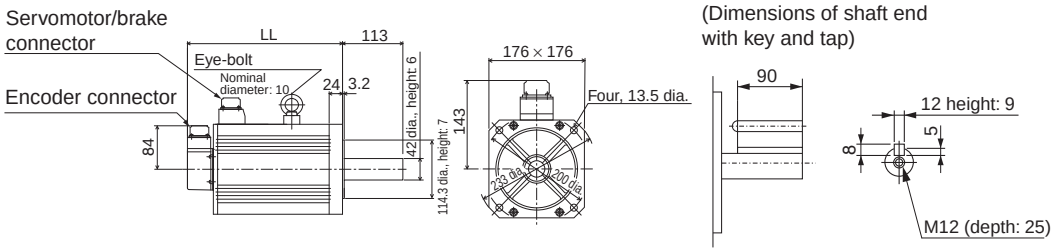

Model	LL
R88M-G4K510T	300.5
R88M-G4K510T-B	337.5

Note: The standard models have a straight shaft.
A model with a key and tap is indicated by adding “S2” to the end of the model number.

• **6 kW**

ABS

R88M-G6K010T (-S2)
R88M-G6K010T-B (S2)

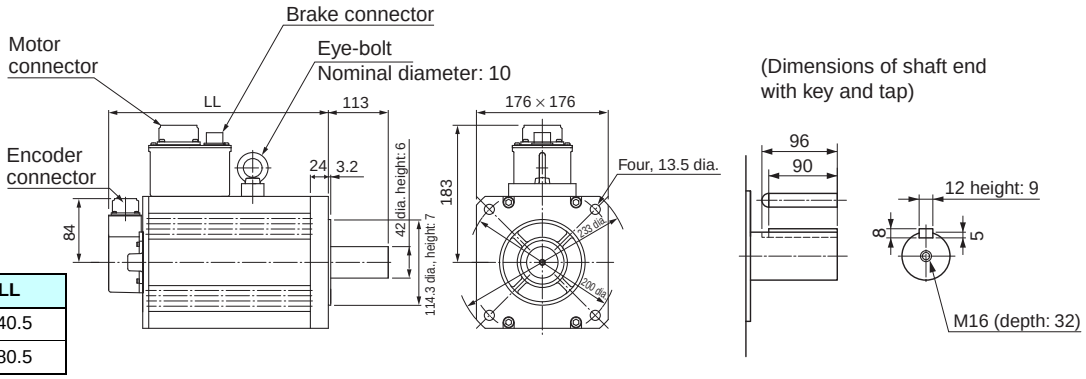

Model	LL
R88M-G6K010T	340.5
R88M-G6K010T-B	380.5

Note: The standard models have a straight shaft.
A model with a key and tap is indicated by adding “S2” to the end of the model number.

● Decelerators

Backlash: 3 Arcminutes Max.

<Cylinder Type>

● 3,000-r/min Servomotors (50 to 750 W)

Model			Outline Drawings	Dimensions (mm)											
				LM	LR	C1	C2	D1	D2	D3	D4	D5	E	F1	F2
50W	1/5	R88G-HPG11B05100B□	1 *4	39.5	42	40	40 × 40	46	46	40	39.5	29	27	2.2	15
	1/9	R88G-HPG11B09050B□	1 *4	39.5	42	40	40 × 40	46	46	40	39.5	29	27	2.2	15
	1/21	R88G-HPG14A21100B□	1	64.0	58	60	60 × 60	70	46	56	55.5	40	37	2.5	21
	1/33	R88G-HPG14A33050B□	1	64.0	58	60	60 × 60	70	46	56	55.5	40	37	2.5	21
	1/45	R88G-HPG14A45050B□	1	64.0	58	60	60 × 60	70	46	56	55.5	40	37	2.5	21
100W	1/5	R88G-HPG11B05100B□	1 *4	39.5	42	40	40 × 40	46	46	40	39.5	29	27	2.2	15
	1/11	R88G-HPG14A11100B□	1	64.0	58	60	60 × 60	70	46	56	55.5	40	37	2.5	21
	1/21	R88G-HPG14A21100B□	1	64.0	58	60	60 × 60	70	46	56	55.5	40	37	2.5	21
	1/33	R88G-HPG20A33100B□	2	66.5	80	90	55 dia.	105	46	85	84	59	53	7.5	27
	1/45	R88G-HPG20A45100B□	2	66.5	80	90	55 dia.	105	46	85	84	59	53	7.5	27
200W	1/5	R88G-HPG14A05200B□	1	64.0	58	60	60 × 60	70	70	56	55.5	40	37	2.5	21
	1/11	R88G-HPG14A11200B□	1	64.0	58	60	60 × 60	70	70	56	55.5	40	37	2.5	21
	1/21	R88G-HPG20A21200B□	1	71.0	80	90	90 × 90	105	70	85	84	59	53	7.5	27
	1/33	R88G-HPG20A33200B□	2	71.0	80	90	89 dia.	105	70	85	84	59	53	7.5	27
	1/45	R88G-HPG20A45200B□	2	71.0	80	90	89 dia.	105	70	85	84	59	53	7.5	27
400W	1/5	R88G-HPG14A05400B□	1	64	58	60	60 × 60	70	70	56	55.5	40	37	2.5	21
	1/11	R88G-HPG20A11400B□	2	71	80	90	89 dia.	105	70	85	84	59	53	7.5	27
	1/21	R88G-HPG20A21400B□	2	71	80	90	89 dia.	105	70	85	84	59	53	7.5	27
	1/33	R88G-HPG32A33400B□	2	104	133	120	122 dia.	135	70	115	114	84	98	12.5	35
	1/45	R88G-HPG32A45400B□	2	104	133	120	122 dia.	135	70	115	114	84	98	12.5	35
750W (200V)	1/5	R88G-HPG20A05750B□	1	78	80	90	80 × 80	105	90	85	84	59	53	7.5	27
	1/11	R88G-HPG20A11750B□	1	78	80	90	80 × 80	105	90	85	84	59	53	7.5	27
	1/21	R88G-HPG32A21750B□	2	104	133	120	122 dia.	135	90	115	114	84	98	12.5	35
	1/33	R88G-HPG32A33750B□	2	104	133	120	122 dia.	135	90	115	114	84	98	12.5	35
	1/45	R88G-HPG32A45750B□	2	104	133	120	122 dia.	135	90	115	114	84	98	12.5	35

Note: 1. The standard models have a straight shaft.
Note: 2. To order a Decelerator with a straight shaft with key and tap, add "J" to the end of the model number, in the place indicated by the box. (e.g., R88G-HPG11B05100BJ)
Note: 3. The diameter of the motor shaft insertion portion is the same as the diameter of the shaft of the corresponding motor.
Note: 4. Applicable for the servomotors with key, if the key is removed.
Note: 5. The dimensional drawings in this document are designed to indicate only the main dimensions. They do not necessarily represent the detailed shapes of the products.

Outline Drawings 1

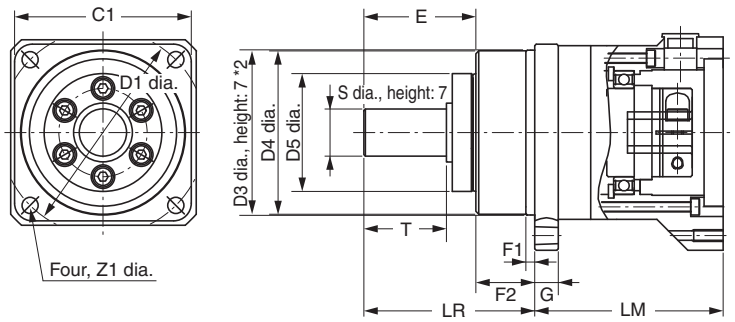

There is one set bolt.

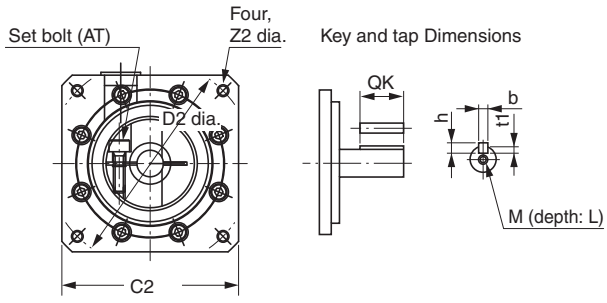

*2. The tolerance for the R88G-HPG50□ and R88G-HPG65□ is h8.

*4. For the R88G-HPG11B series, two set bolts are positioned at an angle of 90° from each other.

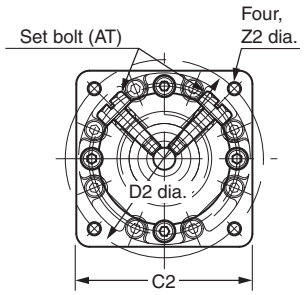

Dimensions (mm)												Model		
G	S	T	Z1	Z2	AT*1	Key Dimensions				Tap Dimensions				
						QK	b	h	t1	M	L			
5	8	20	3.4	M4 × 9	M3	15	3	3	1.8	M3	6	**R88G-HPG11B05100B□**	1/5	50W
5	8	20	3.4	M4 × 9	M3	15	3	3	1.8	M3	6	**R88G-HPG11B09050B□**	1/9	
8	16	28	5.5	M4 × 10	M3	25	5	5	3	M4	8	**R88G-HPG14A21100B□**	1/21	
8	16	28	5.5	M4 × 10	M3	25	5	5	3	M4	8	**R88G-HPG14A33050B□**	1/33	
8	16	28	5.5	M4 × 10	M3	25	5	5	3	M4	8	**R88G-HPG14A45050B□**	1/45	
5	8	20	3.4	M4 × 9	M3	15	3	3	1.8	M3	6	**R88G-HPG11B05100B□**	1/5	100W
8	16	28	5.5	M4 × 10	M3	25	5	5	3	M4	8	**R88G-HPG14A11100B□**	1/11	
8	16	28	5.5	M4 × 10	M3	25	5	5	3	M4	8	**R88G-HPG14A21100B□**	1/21	
10	25	42	9	M4 × 10	M4	36	8	7	4	M6	12	**R88G-HPG20A33100B□**	1/33	
10	25	42	9	M4 × 10	M4	36	8	7	4	M6	12	**R88G-HPG20A45100B□**	1/45	
8	16	28	5.5	M4 × 10	M4	25	5	5	3	M4	8	**R88G-HPG14A05200B□**	1/5	200W
8	16	28	5.5	M4 × 10	M4	25	5	5	3	M4	8	**R88G-HPG14A11200B□**	1/11	
10	25	42	9	M4 × 10	M4	36	8	7	4	M6	12	**R88G-HPG20A21200B□**	1/21	
10	25	42	9	M4 × 10	M4	36	8	7	4	M6	12	**R88G-HPG20A33200B□**	1/33	
10	25	42	9	M4 × 10	M4	36	8	7	4	M6	12	**R88G-HPG20A45200B□**	1/45	
8	16	28	5.5	M4 × 10	M4	25	5	5	3	M4	8	**R88G-HPG14A05400B□**	1/5	400W
10	25	42	9	M4 × 10	M4	36	8	7	4	M6	12	**R88G-HPG20A11400B□**	1/11	
10	25	42	9	M4 × 10	M4	36	8	7	4	M6	12	**R88G-HPG20A21400B□**	1/21	
13	40	82	11	M4 × 10	M4	70	12	8	5	M10	20	**R88G-HPG32A33400B□**	1/33	
13	40	82	11	M4 × 10	M4	70	12	8	5	M10	20	**R88G-HPG32A45400B□**	1/45	
10	25	42	9	M5 × 12	M4	36	8	7	4	M6	12	**R88G-HPG20A05750B□**	1/5	750W (200V)
10	25	42	9	M5 × 12	M4	36	8	7	4	M6	12	**R88G-HPG20A11750B□**	1/11	
13	40	82	11	M5 × 12	M6	70	12	8	5	M10	20	**R88G-HPG32A21750B□**	1/21	
13	40	82	11	M5 × 12	M6	70	12	8	5	M10	20	**R88G-HPG32A33750B□**	1/33	
13	40	82	11	M5 × 12	M6	70	12	8	5	M10	20	**R88G-HPG32A45750B□**	1/45	

*1. This is the set bolt.

Outline Drawings 2

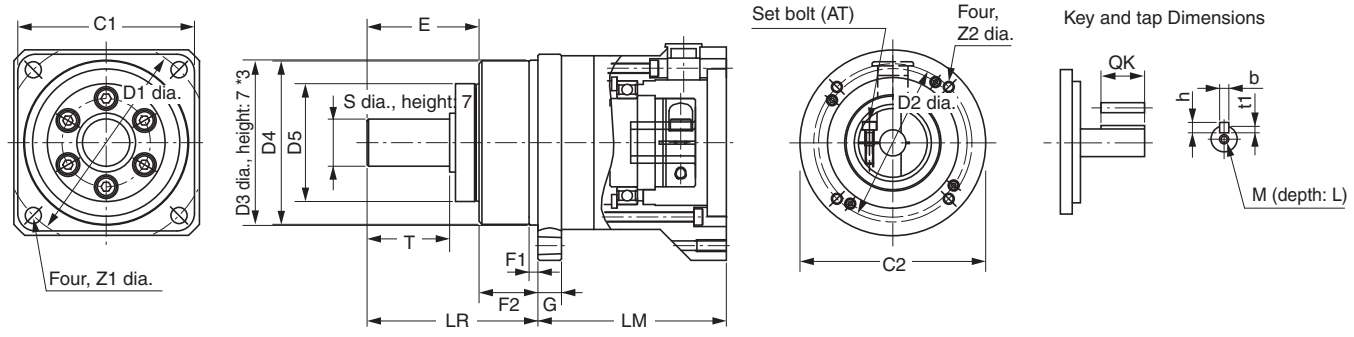

*3. The tolerance for the R88G-HPG50□ and R88G-HPG65□ is h8.

Backlash: 3 Arcminutes Max.

<Cylinder Type>

● 3,000-r/min Servomotors (1 to 5 kW)

Model			Outline Drawings	Dimensions (mm)											
				LM	LR	C1	C2	D1	D2	D3	D4	D5	E	F1	F2
1kW	1/5	R88G-HPG32A052K0B□	2	110	133	120	135 dia.	135	115	115	114	84	98	12.5	35
	1/11	R88G-HPG32A112K0B□	2	110	133	120	135 dia.	135	115	115	114	84	98	12.5	35
	1/21	R88G-HPG32A211K5B□	2	110	133	120	135 dia.	135	115	115	114	84	98	12.5	35
	1/33	R88G-HPG50A332K0B□	2	123	156	170	170 dia.	190	115	165	163	122	103	12	53
	1/45	R88G-HPG50A451K5B□	2	123	156	170	170 dia.	190	115	165	163	122	103	12	53
1.5kW	1/5	R88G-HPG32A052K0B□	2	110	133	120	135 dia.	135	115	115	114	84	98	12.5	35
	1/11	R88G-HPG32A112K0B□	2	110	133	120	135 dia.	135	115	115	114	84	98	12.5	35
	1/21	R88G-HPG32A211K5B□	2	110	133	120	135 dia.	135	115	115	114	84	98	12.5	35
	1/33	R88G-HPG50A332K0B□	2	123	156	170	170 dia.	190	115	165	163	122	103	12	53
	1/45	R88G-HPG50A451K5B□	2	123	156	170	170 dia.	190	115	165	163	122	103	12	53
2kW	1/5	R88G-HPG32A052K0B□	2	110	133	120	135 dia.	135	115	115	114	84	98	12.5	35
	1/11	R88G-HPG32A112K0B□	2	110	133	120	135 dia.	135	115	115	114	84	98	12.5	35
	1/21	R88G-HPG50A212K0B□	2	123	156	170	170 dia.	190	115	165	163	122	103	12	53
	1/33	R88G-HPG50A332K0B□	2	123	156	170	170 dia.	190	115	165	163	122	103	12	53
3kW	1/5	R88G-HPG32A053K0B□	1	107	133	120	130 × 130	135	145	115	114	84	98	12.5	35
	1/11	R88G-HPG50A113K0B□	2	123	156	170	170 dia.	190	145	165	163	122	103	12	53
	1/21	R88G-HPG50A213K0B□	2	123	156	170	170 dia.	190	145	165	163	122	103	12	53
4kW	1/5	R88G-HPG32A054K0B□	1	129	133	120	130 × 130	135	145	115	114	84	98	12.5	35
	1/11	R88G-HPG50A115K0B□	1	149	156	170	130 × 130	190	145	165	163	122	103	12	53
5kW	1/5	R88G-HPG50A055K0B□	1	149	156	170	130 × 130	190	145	165	163	122	103	12	53
	1/11	R88G-HPG50A115K0B□	1	149	156	170	130 × 130	190	145	165	163	122	103	12	53

Note: 1. The standard models have a straight shaft.
Note: 2. To order a Decelerator with a straight shaft with key and tap, add "J" to the end of the model number, in the place indicated by the box. (e.g., R88G-HPG32A051K0BJ)
Note: 3. The diameter of the motor shaft insertion portion is the same as the diameter of the shaft of the corresponding motor.
Note: 4. Applicable for the servomotors with key, if the key is removed.
Note: 5. The dimensional drawings in this document are designed to indicate only the main dimensions. They do not necessarily represent the detailed shapes of the products.

Outline Drawings 1

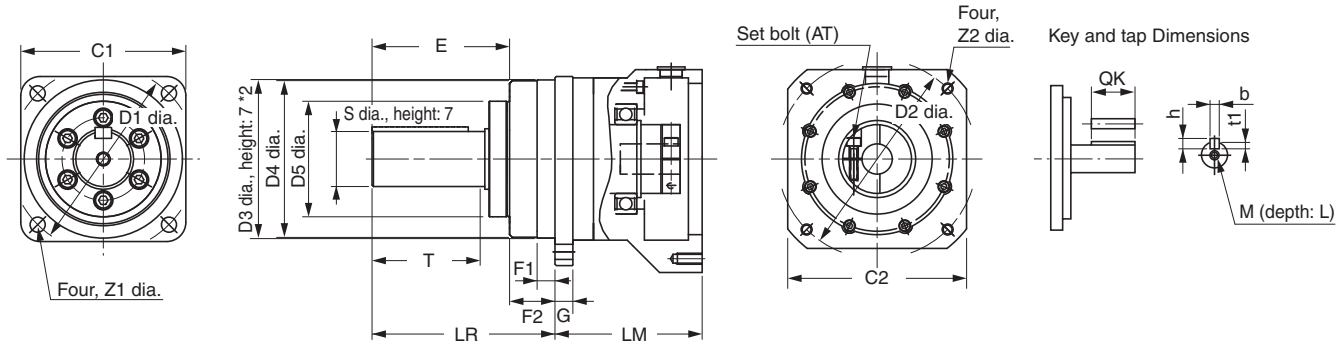

*2. The tolerance for the R88G-HPG50□ and R88G-HPG65□ is h8.

Dimensions (mm)											Model		
G	S	T	Z1	Z2	AT*1	Key Dimensions				Tap Dimensions				
						QK	b	h	t1	M	L			
13	40	82	11	M8 × 10	M6	70	12	8	5	M10	20	R88G-HPG32A052K0B□	1/5	
13	40	82	11	M8 × 10	M6	70	12	8	5	M10	20	R88G-HPG32A112K0B□	1/11	
13	40	82	11	M8 × 10	M6	70	12	8	5	M10	20	R88G-HPG32A211K5B□	1/21	1kW
16	50	82	14	M8 × 10	M6	70	14	9	5.5	M10	20	R88G-HPG50A332K0B□	1/33	
16	50	82	14	M8 × 10	M6	70	14	9	5.5	M10	20	R88G-HPG50A451K5B□	1/45	
13	40	82	11	M8 × 10	M6	70	12	8	5	M10	20	R88G-HPG32A052K0B□	1/5	
13	40	82	11	M8 × 10	M6	70	12	8	5	M10	20	R88G-HPG32A112K0B□	1/11	
13	40	82	11	M8 × 10	M6	70	12	8	5	M10	20	R88G-HPG32A211K5B□	1/21	1.5kW
16	50	82	14	M8 × 10	M6	70	14	9	5.5	M10	20	R88G-HPG50A332K0B□	1/33	
16	50	82	14	M8 × 10	M6	70	14	9	5.5	M10	20	R88G-HPG50A451K5B□	1/45	
13	40	82	11	M8 × 10	M6	70	12	8	5	M10	20	R88G-HPG32A052K0B□	1/5	
13	40	82	11	M8 × 10	M6	70	12	8	5	M10	20	R88G-HPG32A112K0B□	1/11	2kW
16	50	82	14	M8 × 10	M6	70	14	9	5.5	M10	20	R88G-HPG50A212K0B□	1/21	
16	50	82	14	M8 × 10	M6	70	14	9	5.5	M10	20	R88G-HPG50A332K0B□	1/33	
13	40	82	11	M8 × 18	M6	70	12	8	5	M10	20	R88G-HPG32A053K0B□	1/5	
16	50	82	14	M8 × 16	M6	70	14	9	5.5	M10	20	R88G-HPG50A113K0B□	1/11	3kW
16	50	82	14	M8 × 16	M6	70	14	9	5.5	M10	20	R88G-HPG50A213K0B□	1/21	
13	40	82	11	M8 × 25	M6	70	12	8	5	M10	20	R88G-HPG32A054K0B□	1/5	4kW
16	50	82	14	M8 × 25	M6	70	14	9	5.5	M10	20	R88G-HPG50A115K0B□	1/11	
16	50	82	14	M8 × 25	M6	70	14	9	5.5	M10	20	R88G-HPG50A055K0B□	1/5	5kW
16	50	82	14	M8 × 25	M6	70	14	9	5.5	M10	20	R88G-HPG50A115K0B□	1/11	

*1. This is the set bolt.

Outline Drawings 2

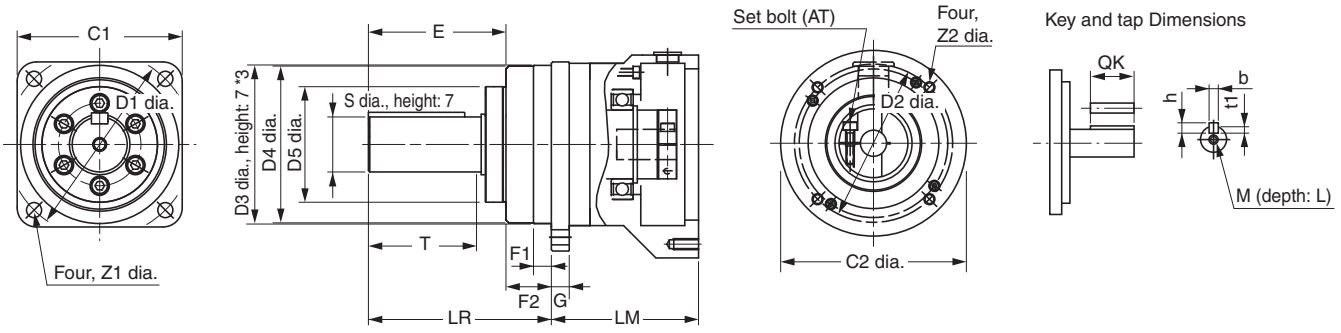

*3. The tolerance for the R88G-HPG50□ and R88G-HPG65□ is h8.

Backlash: 3 Arcminutes Max.

<Flat Servomotors>

● 3,000-r/min Servomotors (100 to 400 W)

Model			Dimensions (mm)												
			LM	LR	C1	C2	D1	D2	D3	D4	D5	E	F1	F2	
100 W	1/5	R88G-HPG11A05100PB	39.5	42	40	60×60	46	70	40.0	39.5	29	27	2.2	15	
	1/11	R88G-HPG14A11100PB	64.0	58	60	60×60	70	70	56.0	55.5	40	37	2.5	21	
	1/21	R88G-HPG14A21100PB	64.0	58	60	60×60	70	70	56.0	55.5	40	37	2.5	21	
	1/33	R88G-HPG20A33100PB	71.0	80	90	89 dia.	105	70	85.0	84.0	59	53	7.5	27	
	1/45	R88G-HPG20A45100PB	71.0	80	90	89 dia.	105	70	85.0	84.0	59	53	7.5	27	
200 W	1/5	R88G-HPG14A05200PB	65.0	58	60	80×80	70	90	56.0	55.5	40	37	2.5	21	
	1/11	R88G-HPG20A11200PB	78.0	80	90	80×80	105	90	85.0	84.0	59	53	7.5	27	
	1/21	R88G-HPG20A21200PB	78.0	80	90	80×80	105	90	85.0	84.0	59	53	7.5	27	
	1/33	R88G-HPG20A33200PB	78.0	80	90	80×80	105	90	85.0	84.0	59	53	7.5	27	
	1/45	R88G-HPG20A45200PB	78.0	80	90	80×80	105	90	85.0	84.0	59	53	7.5	27	
400 W	1/5	R88G-HPG20A05400PB	78.0	80	90	80×80	105	90	85.0	84.0	59	53	7.5	27	
	1/11	R88G-HPG20A11400PB	78.0	80	90	80×80	105	90	85.0	84.0	59	53	7.5	27	
	1/21	R88G-HPG20A21400PB	78.0	80	90	80×80	105	90	85.0	84.0	59	53	7.5	27	
	1/33	R88G-HPG32A33400PB	104.0	133	120	122 dia.	135	90	115.0	114.0	84	98	12.5	35	
	1/45	R88G-HPG32A45400PB	104.0	133	120	122 dia.	135	90	115.0	114.0	84	98	12.5	35	

Note: 1. The standard models have a straight shaft.
A model with a key and tap is indicated by adding "J" to the end of the model number.
Note: 2. Applicable for the servomotors with key, if the key is removed.

Outline Drawings

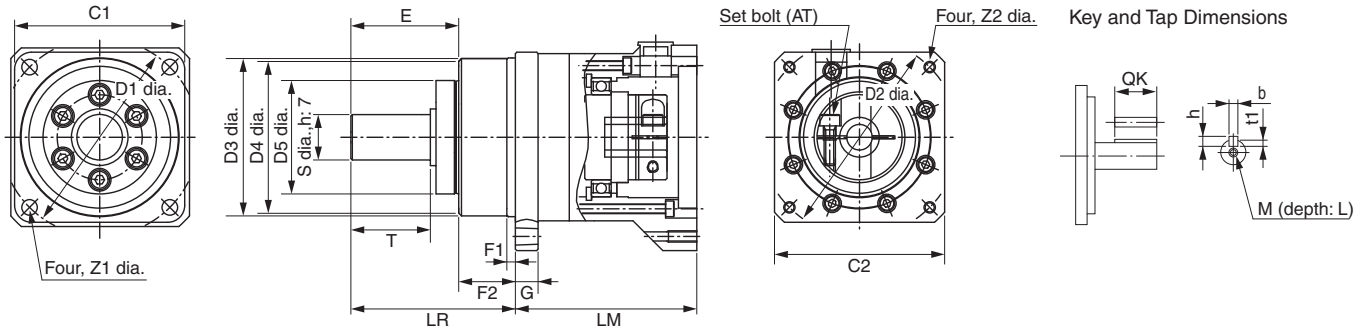

	Dimensions (mm)											Model		
	G	S	T	Z1	Z2	AT*1	Key dimensions				Tap dimensions				
							QK	b	h	t1	M	L			
	5	8	20	3.4	M4×9	M3	15	3	3	1.8	M3	6	R88G-HPG11A05100PB	1/5	
	8	16	28	5.5	M4×10	M3	25	5	5	3.0	M4	8	R88G-HPG14A11100PB	1/11	
	8	16	28	5.5	M4×10	M3	25	5	5	3.0	M4	8	R88G-HPG14A21100PB	1/21	100 W
	10	25	42	9.0	M4×10	M3	36	8	7	4.0	M6	12	R88G-HPG20A33100PB	1/33	
	10	25	42	9.0	M4×10	M3	36	8	7	4.0	M6	12	R88G-HPG20A45100PB	1/45	
	8	16	28	5.5	M5×12	M4	25	5	5	3.0	M4	8	R88G-HPG14A05200PB	1/5	
	10	25	42	9.0	M5×12	M4	36	8	7	4.0	M6	12	R88G-HPG20A11200PB	1/11	
	10	25	42	9.0	M5×12	M4	36	8	7	4.0	M6	12	R88G-HPG20A21200PB	1/21	200 W
	10	25	42	9.0	M5×12	M4	36	8	7	4.0	M6	12	R88G-HPG20A33200PB	1/33	
	10	25	42	9.0	M5×12	M4	36	8	7	4.0	M6	12	R88G-HPG20A45200PB	1/45	
	10	25	42	9.0	M5×12	M4	36	8	7	4.0	M6	12	R88G-HPG20A05400PB	1/5	
	10	25	42	9.0	M5×12	M4	36	8	7	4.0	M6	12	R88G-HPG20A11400PB	1/11	
	10	25	42	9.0	M5×12	M4	36	8	7	4.0	M6	12	R88G-HPG20A21400PB	1/21	400 W
	13	40	82	11.0	M5×12	M6	70	12	8	5.0	M10	20	R88G-HPG32A33400PB	1/33	
	13	40	82	11.0	M5×12	M6	70	12	8	5.0	M10	20	R88G-HPG32A45400PB	1/45	

*1. This is the set bolt.

Backlash: 3 Arcminutes Max.

<Cylinder Type>

● 2,000-r/min Servomotors (400 W to 5 kW)

Model			Outline Drawings	Dimensions (mm)											
				LM	LR	C1	C2	D1	D2	D3	D4	D5	E	F1	F2
1kW	1/5	R88G-HPG32A053K0B□	1	107	133	120	130 × 130	135	145	115	114	84	98	12.5	35
	1/11	R88G-HPG32A112K0SB□	1	107	133	120	130 × 130	135	145	115	114	84	98	12.5	35
	1/21	R88G-HPG32A211K0SB□	1	107	133	120	130 × 130	135	145	115	114	84	98	12.5	35
	1/33	R88G-HPG50A332K0SB□	2	123	156	170	170 dia.	190	145	165	163	122	103	12	53
	1/45	R88G-HPG50A451K0SB□	2	123	156	170	170 dia.	190	145	165	163	122	103	12	53
1.5kW	1/5	R88G-HPG32A053K0B□	1	107	133	120	130 × 130	135	145	115	114	84	98	12.5	35
	1/11	R88G-HPG32A112K0SB□	1	107	133	120	130 × 130	135	145	115	114	84	98	12.5	35
	1/21	R88G-HPG50A213K0B□	2	123	156	170	170 dia.	190	145	165	163	122	103	12	53
	1/33	R88G-HPG50A332K0SB□	2	123	156	170	170 dia.	190	145	165	163	122	103	12	53
2kW	1/5	R88G-HPG32A053K0B□	1	107	133	120	130 × 130	135	145	115	114	84	98	12.5	35
	1/11	R88G-HPG32A112K0SB□	1	107	133	120	130 × 130	135	145	115	114	84	98	12.5	35
	1/21	R88G-HPG50A213K0B□	2	123	156	170	170 dia.	190	145	165	163	122	103	12	53
	1/33	R88G-HPG50A332K0SB□	2	123	156	170	170 dia.	190	145	165	163	122	103	12	53
3kW	1/5	R88G-HPG32A054K0B□	1	129	133	120	130 × 130	135	145	115	114	84	98	12.5	35
	1/11	R88G-HPG50A115K0B□	1	149	156	170	130 × 130	190	145	165	163	122	103	12	53
	1/21	R88G-HPG50A213K0SB□	1	149	156	170	130 × 130	190	145	165	163	122	103	12	53
	1/25	R88G-HPG65A253K0SB□	1	231	222	230	130 × 130	260	145	220	214	168	165	12	57
4kW	1/5	R88G-HPG50A055K0SB□	1	149	156	170	180 × 180	190	200	165	163	122	103	12	53
	1/11	R88G-HPG50A115K0SB□	1	149	156	170	180 × 180	190	200	165	163	122	103	12	53
	1/20	R88G-HPG65A205K0SB□	1	231	222	230	180 × 180	260	200	220	214	168	165	12	57
	1/25	R88G-HPG65A255K0SB□	1	231	222	230	180 × 180	260	200	220	214	168	165	12	57
5kW	1/5	R88G-HPG50A055K0SB□	1	149	156	170	180 × 180	190	200	165	163	122	103	12	53
	1/11	R88G-HPG50A115K0SB□	1	149	156	170	180 × 180	190	200	165	163	122	103	12	53
	1/20	R88G-HPG65A205K0SB□	1	231	222	230	180 × 180	260	200	220	214	168	165	12	57
	1/25	R88G-HPG65A255K0SB□	1	231	222	230	180 × 180	260	200	220	214	168	165	12	57
7.5kW	1/5	R88G-HPG65A057K5SB□	1	184.5	222	230	180 × 180	260	200	220	214	168	165	12.0	57
	1/12	R88G-HPG65A127K5SB□	1	254.5	222	230	180 × 180	260	200	220	214	168	165	12.0	57

Note: 1. The standard models have a straight shaft.
Note: 2. To order a Decelerator with a straight shaft with key and tap, add "J" to the end of the model number, in the place indicated by the box. (e.g., R88G-HPG32A053K0BJ)
Note: 3. The diameter of the motor shaft insertion portion is the same as the diameter of the shaft of the corresponding motor.
Note: 4. Applicable for the servomotors with key, if the key is removed.
Note: 5. The dimensional drawings in this document are designed to indicate only the main dimensions. They do not necessarily represent the detailed shapes of the products.

Outline Drawings 1

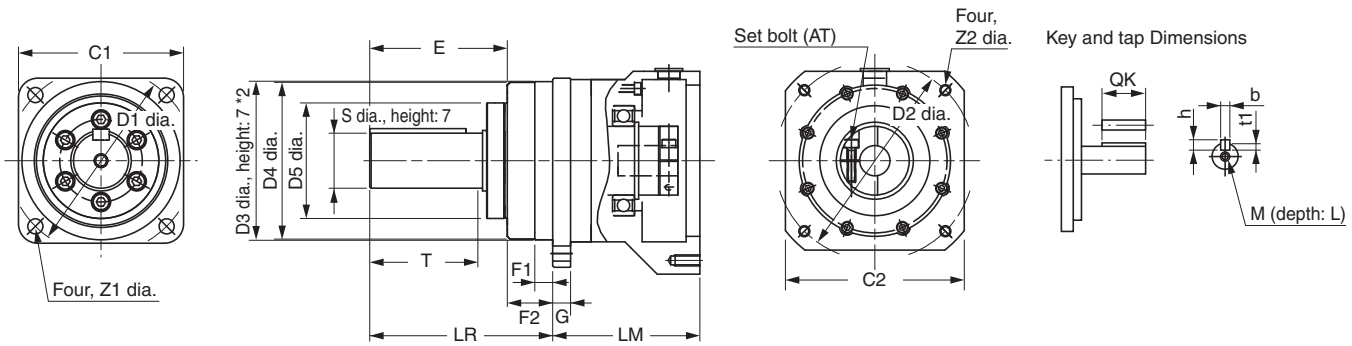

*2. The tolerance for the R88G-HPG50□ and R88G-HPG65□ is h8.

Dimensions (mm)											Model		
G	S	T	Z1	Z2	AT*1	Key Dimensions				Tap Dimensions				
						QK	b	h	t1	M	L			
13	40	82	11	M8 × 18	M6	70	12	8	5	M10	20	R88G-HPG32A053K0B□	1/5	1kW
13	40	82	11	M8 × 18	M6	70	12	8	5	M10	20	R88G-HPG32A112K0SB□	1/11	
13	40	82	11	M8 × 18	M6	70	12	8	5	M10	20	R88G-HPG32A211K0SB□	1/21	
16	50	82	14	M8 × 16	M6	70	14	9	5.5	M10	20	R88G-HPG50A332K0SB□	1/33	
16	50	82	14	M8 × 16	M6	70	14	9	5.5	M10	20	R88G-HPG50A451K0SB□	1/45	
13	40	82	11	M8 × 18	M6	70	12	8	5	M10	20	R88G-HPG32A053K0B□	1/5	1.5kW
13	40	82	11	M8 × 18	M6	70	12	8	5	M10	20	R88G-HPG32A112K0SB□	1/11	
16	50	82	14	M8 × 16	M6	70	14	9	5.5	M10	20	R88G-HPG50A213K0B□	1/21	
16	50	82	14	M8Å~16	M6	70	14	9	5.5	M10	20	R88G-HPG50A332K0SB□	1/33	
13	40	82	11	M8 × 18	M6	70	12	8	5	M10	20	R88G-HPG32A053K0B□	1/5	2kW
13	40	82	11	M8 × 18	M6	70	12	8	5	M10	20	R88G-HPG32A112K0SB□	1/11	
16	50	82	14	M8 × 16	M6	70	14	9	5.5	M10	20	R88G-HPG50A213K0B□	1/21	
16	50	82	14	M8 × 16	M6	70	14	9	5.5	M10	20	R88G-HPG50A332K0SB□	1/33	
13	40	82	11	M8 × 25	M6	70	12	8	5	M10	20	R88G-HPG32A054K0B□	1/5	3kW
16	50	82	14	M8 × 25	M6	70	14	9	5.5	M10	20	R88G-HPG50A115K0B□	1/11	
16	50	82	14	M8 × 25	M6	70	14	9	5.5	M10	20	R88G-HPG50A213K0SB□	1/21	
25	80	130	18	M8 × 25	M8	110	22	14	9	M16	35	R88G-HPG65A253K0SB□	1/25	
16	50	82	14	M12 × 25	M6	70	14	9	5.5	M10	20	R88G-HPG50A055K0SB□	1/5	4kW
16	50	82	14	M12 × 25	M6	70	14	9	5.5	M10	20	R88G-HPG50A115K0SB□	1/11	
25	80	130	18	M12 × 25	M8	110	22	14	9	M16	35	R88G-HPG65A205K0SB□	1/20	
25	80	130	18	M12 × 25	M8	110	22	14	9	M16	35	R88G-HPG65A255K0SB□	1/25	
16	50	82	14	M12 × 25	M6	70	14	9	5.5	M10	20	R88G-HPG50A055K0SB□	1/5	5kW
16	50	82	14	M12 × 25	M6	70	14	9	5.5	M10	20	R88G-HPG50A115K0SB□	1/11	
25	80	130	18	M12 × 25	M8	110	22	14	9	M16	35	R88G-HPG65A205K0SB□	1/20	
25	80	130	18	M12 × 25	M8	110	22	14	9	M16	35	R88G-HPG65A255K0SB□	1/25	
25	80	130	18	M12 × 25	M8	110	22	14	9.0	M16	35	R88G-HPG65A057K5SB□	1/5	7.5kW
25	80	130	18	M12 × 25	M8	110	22	14	9.0	M16	35	R88G-HPG65A127K5SB□	1/12	

*1. This is the set bolt.

Outline Drawings 2

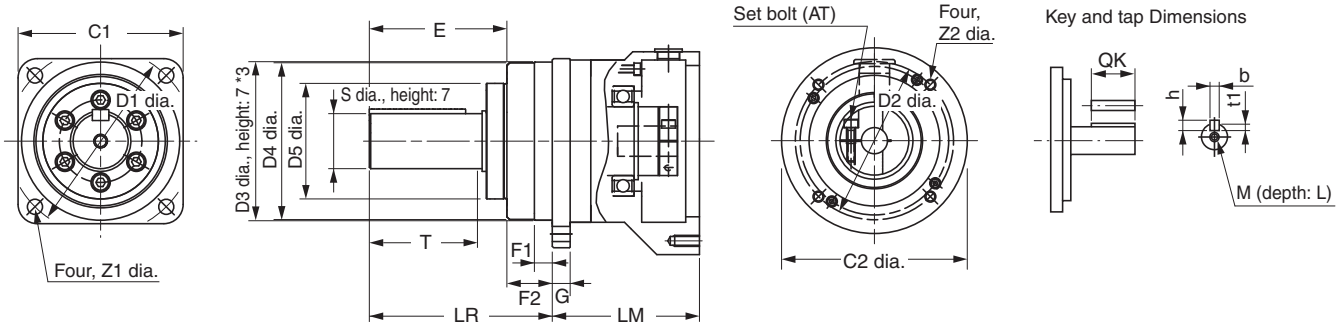

*3. The tolerance for the R88G-HPG50□ and R88G-HPG65□ is h8.

Backlash: 3 Arcminutes Max.

<Cylinder Type>

● 1,000-r/min Servomotors (900 W to 6 kW)

Model			Outline Drawings	Dimensions (mm)											
				LM	LR	C1	C2	D1	D2	D3	D4	D5	E	F1	F2
900W	1/5	R88G-HPG32A05900TB□	1	129	133	120	130 × 130	135	145	115	114	84	98	12.5	35
	1/11	R88G-HPG32A11900TB□	1	129	133	120	130 × 130	135	145	115	114	84	98	12.5	35
	1/21	R88G-HPG50A21900TB□	1	149	156	170	130 × 130	190	145	165	163	122	103	12	53
	1/33	R88G-HPG50A33900TB□	1	149	156	170	130 × 130	190	145	165	163	122	103	12	53
2kW	1/5	R88G-HPG32A052K0TB□	1	129	133	120	180 × 180	135	200	115	114	84	98	12.5	35
	1/11	R88G-HPG50A112K0TB□	1	149	156	170	180 × 180	190	200	165	163	122	103	12	53
	1/21	R88G-HPG50A212K0TB□	1	231	222	230	180 × 180	260	200	220	214	168	165	12	53
	1/25	R88G-HPG65A255K0SB□	1	231	222	230	180 × 180	260	200	220	214	168	165	12	57
3kW	1/5	R88G-HPG50A055K0SB□	1	149	156	170	180 × 180	190	200	165	163	122	103	12	53
	1/11	R88G-HPG50A115K0SB□	1	149	156	170	180 × 180	190	200	165	163	122	103	12	53
	1/20	R88G-HPG65A205K0SB□	1	231	222	230	180 × 180	260	200	220	214	168	165	12	57
	1/25	R88G-HPG65A255K0SB□	1	231	222	230	180 × 180	260	200	220	214	168	165	12	57
4.5kW	1/5	R88G-HPG50A054K5TB□	1	149	156	170	180 × 180	190	200	165	163	122	103	12.0	53
	1/12	R88G-HPG65A127K5SB□	1	254.5	222	230	180 × 180	260	200	220	214	168	165	12.0	57
	1/20	R88G-HPG65A204K5TB□	1	254.5	222	230	180 × 180	260	200	220	214	168	165	12.0	57
6kW	1/5	R88G-HPG65A057K5SB□	1	184.5	222	230	180 × 180	260	200	220	214	168	165	12.0	57
	1/12	R88G-HPG65A127K5SB□	1	254.5	222	230	180 × 180	260	200	220	214	168	165	12.0	57

Note: 1. The standard models have a straight shaft.
Note: 2. To order a Decelerator with a straight shaft with key and tap, add "J" to the end of the model number, in the place indicated by the box.
(e.g., R88G-HPG32A05900TBJ)
Note: 3. The diameter of the motor shaft insertion portion is the same as the diameter of the shaft of the corresponding motor.
Note: 4. Applicable for the servomotors with key, if the key is removed.
Note: 5. The dimensional drawings in this document are designed to indicate only the main dimensions. They do not necessarily represent the detailed shapes of the products.

Outline Drawings 1

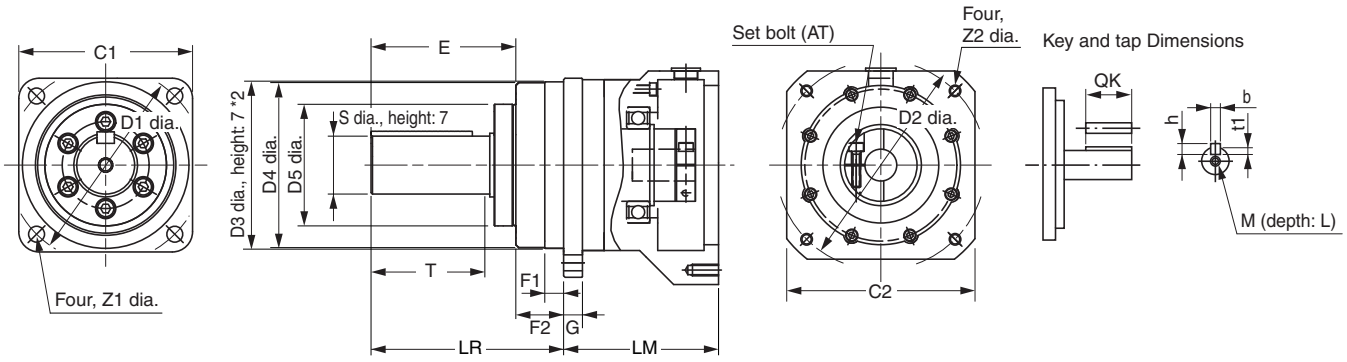

*2. The tolerance for the R88G-HPG50□ and R88G-HPG65□ is h8.

Dimensions (mm)											Model		
G	S	T	Z1	Z2	AT*1	Key Dimensions				Tap Dimensions				
						QK	b	h	t1	M	L			
13	40	82	11	M8 × 25	M6	70	12	8	5	M10	20	R88G-HPG32A05900TB□	1/5	900W
13	40	82	11	M8 × 25	M6	70	12	8	5	M10	20	R88G-HPG32A11900TB□	1/11	
16	50	82	14	M8 × 25	M6	70	14	9	5.5	M10	20	R88G-HPG50A21900TB□	1/21	
16	50	82	14	M8 × 25	M6	70	14	9	5.5	M10	20	R88G-HPG50A33900TB□	1/33	
13	40	82	11	M12 × 25	M6	70	12	8	5	M10	20	R88G-HPG32A052K0TB□	1/5	2kW
16	50	82	14	M12 × 25	M6	70	14	9	5.5	M10	20	R88G-HPG50A112K0TB□	1/11	
25	80	130	18	M12 × 25	M8	110	22	14	9	M16	35	R88G-HPG50A212K0TB□	1/21	
25	80	130	18	M12 × 25	M8	110	22	14	9	M16	35	R88G-HPG65A255K0SB□	1/25	
16	50	82	14	M12 × 25	M6	70	14	9	5.5	M10	20	R88G-HPG50A055K0SB□	1/5	3kW
16	50	82	14	M12 × 25	M6	70	14	9	5.5	M10	20	R88G-HPG50A115K0SB□	1/11	
25	80	130	18	M12 × 25	M8	110	22	14	9	M16	35	R88G-HPG65A205K0SB□	1/20	
25	80	130	18	M12 × 25	M8	110	22	14	9	M16	35	R88G-HPG65A255K0SB□	1/25	
16	50	82	14	M12 × 25	M6	70	14	9	5.5	M10	20	R88G-HPG50A054K5TB□	1/5	4.5kW
25	80	130	18	M12 × 25	M8	110	22	14	9	M16	35	R88G-HPG65A127K5SB□	1/12	
25	80	130	18	M12 × 25	M8	110	22	14	9	M16	35	R88G-HPG65A204K5TB□	1/20	
25	80	130	18	M12 × 25	M8	110	22	14	9	M16	35	R88G-HPG65A057K5SB□	1/5	6kW
25	80	130	18	M12 × 25	M8	110	22	14	9	M16	35	R88G-HPG65A127K5SB□	1/12	

*1. This is the set bolt.

Backlash: 15 Arcminutes Max.

<Cylinder Type>

● 3,000-r/min Servomotors (50 to 750 W)

Model			Dimensions (mm)											
			LM	LR	C1	C2	D1	D2	D3	D4	E3	F	G	
50 W	1/5	R88G-VRSF05B100CJ	67.5	32	52	40	46	60	50	45	10	3	6	
	1/9	R88G-VRSF09B100CJ	67.5	32	52	40	46	60	50	45	10	3	6	
	1/15	R88G-VRSF15B100CJ	78.0	32	52	40	46	60	50	45	10	3	6	
	1/25	R88G-VRSF25B050CJ	78.0	32	52	40	46	60	50	45	10	3	6	
100 W	1/5	R88G-VRSF05B100CJ	67.5	32	52	40	46	60	50	45	10	3	6	
	1/9	R88G-VRSF09B100CJ	67.5	32	52	40	46	60	50	45	10	3	6	
	1/15	R88G-VRSF15B100CJ	78.0	32	52	40	46	60	50	45	10	3	6	
	1/25	R88G-VRSF25B100CJ	78.0	32	52	40	46	60	50	45	10	3	6	
200 W	1/5	R88G-VRSF05B200CJ	72.5	32	52	60	70	60	50	45	10	3	10	
	1/9	R88G-VRSF09C200CJ	89.5	50	78	60	70	90	70	62	17	3	8	
	1/15	R88G-VRSF15C200CJ	100.0	50	78	60	70	90	70	62	17	3	8	
	1/25	R88G-VRSF25C200CJ	100.0	50	78	60	70	90	70	62	17	3	8	
400 W	1/5	R88G-VRSF05C400CJ	89.5	50	78	60	70	90	70	62	17	3	8	
	1/9	R88G-VRSF09C400CJ	89.5	50	78	60	70	90	70	62	17	3	8	
	1/15	R88G-VRSF15C400CJ	100.0	50	78	60	70	90	70	62	17	3	8	
	1/25	R88G-VRSF25C400CJ	100.0	50	78	60	70	90	70	62	17	3	8	
750 W	1/5	R88G-VRSF05C750CJ	93.5	50	78	80	90	90	70	62	17	3	10	
	1/9	R88G-VRSF09D750CJ	97.5	61	98	80	90	115	90	75	18	5	10	
	1/15	R88G-VRSF15D750CJ	110.0	61	98	80	90	115	90	75	18	5	10	
	1/25	R88G-VRSF25D750CJ	110.0	61	98	80	90	115	90	75	18	5	10	

Note: 1. The standard models have a straight shaft with a key.
Note: 2. The diameter of the motor shaft insertion portion is the same as the diameter of the shaft of the corresponding motor.
Note: 3. Applicable for the servomotors with key, if the key is removed.

Outline Drawings

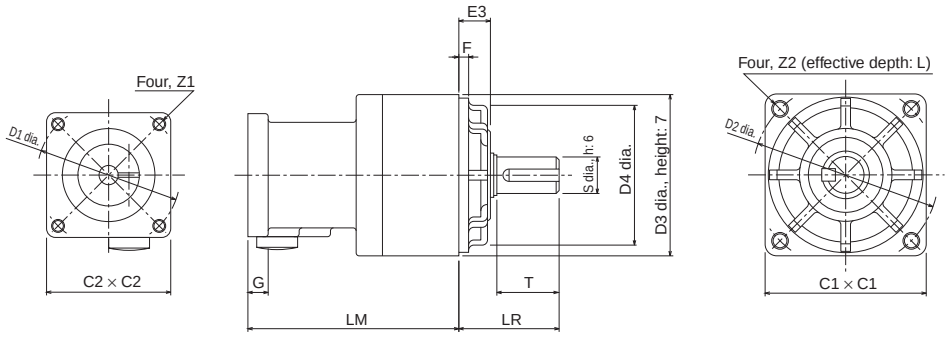

	Dimensions (mm)										Model		
	S	T	Z1	Z2	AT	L	Key dimensions						
							QK	b	h	t1			
	12	20	M4	M5	M3	12	16	4	4	2.5	**R88G-VRSF05B100CJ**	1/5	50 W
	12	20	M4	M5	M3	12	16	4	4	2.5	**R88G-VRSF09B100CJ**	1/9	
	12	20	M4	M5	M3	12	16	4	4	2.5	**R88G-VRSF15B100CJ**	1/15	
	12	20	M4	M5	M3	12	16	4	4	2.5	**R88G-VRSF25B050CJ**	1/25	
	12	20	M4	M5	M3	12	16	4	4	2.5	**R88G-VRSF05B100CJ**	1/5	100 W
	12	20	M4	M5	M3	12	16	4	4	2.5	**R88G-VRSF09B100CJ**	1/9	
	12	20	M4	M5	M3	12	16	4	4	2.5	**R88G-VRSF15B100CJ**	1/15	
	12	20	M4	M5	M3	12	16	4	4	2.5	**R88G-VRSF25B100CJ**	1/25	
	12	20	M5	M5	M4	12	16	4	4	2.5	**R88G-VRSF05B200CJ**	1/5	200 W
	19	30	M5	M6	M4	20	22	6	6	3.5	**R88G-VRSF09C200CJ**	1/9	
	19	30	M5	M6	M4	20	22	6	6	3.5	**R88G-VRSF15C200CJ**	1/15	
	19	30	M5	M6	M4	20	22	6	6	3.5	**R88G-VRSF25C200CJ**	1/25	
	19	30	M5	M6	M4	20	22	6	6	3.5	**R88G-VRSF05C400CJ**	1/5	400 W
	19	30	M5	M6	M4	20	22	6	6	3.5	**R88G-VRSF09C400CJ**	1/9	
	19	30	M5	M6	M4	20	22	6	6	3.5	**R88G-VRSF15C400CJ**	1/15	
	19	30	M5	M6	M4	20	22	6	6	3.5	**R88G-VRSF25C400CJ**	1/25	
	19	30	M5	M6	M4	20	22	6	6	3.5	**R88G-VRSF05C750CJ**	1/5	750 W
	24	40	M5	M8	M4	20	30	8	7	4	**R88G-VRSF09D750CJ**	1/9	
	24	40	M5	M8	M4	20	30	8	7	4	**R88G-VRSF15D750CJ**	1/15	
	24	40	M5	M8	M4	20	30	8	7	4	**R88G-VRSF25D750CJ**	1/25	

Outline Drawings

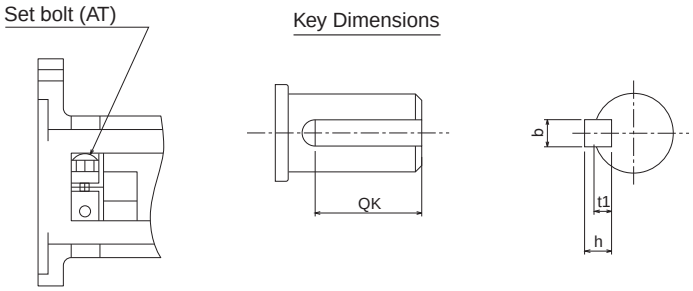

Backlash: 15 Arcminutes Max.

<Flat Servomotors>

● 3,000-r/min Servomotors (100 to 400 W)

Model			Dimensions (mm)											
			LM	LR	C1	C2	D1	D2	D3	D4	E3	F	G	
100 W	1/5	**R88G-VRSF05B100PCJ**	67.5	32	52	60	70	60	50	45	10	3	8	
	1/9	**R88G-VRSF09B100PCJ**	67.5	32	52	60	70	60	50	45	10	3	8	
	1/15	**R88G-VRSF15B100PCJ**	78.0	32	52	60	70	60	50	45	10	3	8	
	1/25	**R88G-VRSF25B100PCJ**	78.0	32	52	60	70	60	50	45	10	3	8	
200 W	1/5	**R88G-VRSF05B200PCJ**	72.5	32	52	80	90	60	50	45	10	3	12	
	1/9	**R88G-VRSF09C200PCJ**	89.5	50	78	80	90	90	70	62	17	3	12	
	1/15	**R88G-VRSF15C200PCJ**	100.0	50	78	80	90	90	70	62	17	3	12	
	1/25	**R88G-VRSF25C200PCJ**	100.0	50	78	80	90	90	70	62	17	3	12	
400 W	1/5	**R88G-VRSF05C400PCJ**	89.5	50	78	80	90	90	70	62	17	3	12	
	1/9	**R88G-VRSF09C400PCJ**	89.5	50	78	80	90	90	70	62	17	3	12	
	1/15	**R88G-VRSF15C400PCJ**	100.0	50	78	80	90	90	70	62	17	3	12	
	1/25	**R88G-VRSF25C400PCJ**	100.0	50	78	80	90	90	70	62	17	3	12	

Note: 1. The standard models have a straight shaft with a key.
Note: 2. The diameter of the motor shaft insertion portion is the same as the diameter of the shaft of the corresponding motor.
Note: 3. Applicable for the servomotors with key, if the key is removed.

Outline Drawings

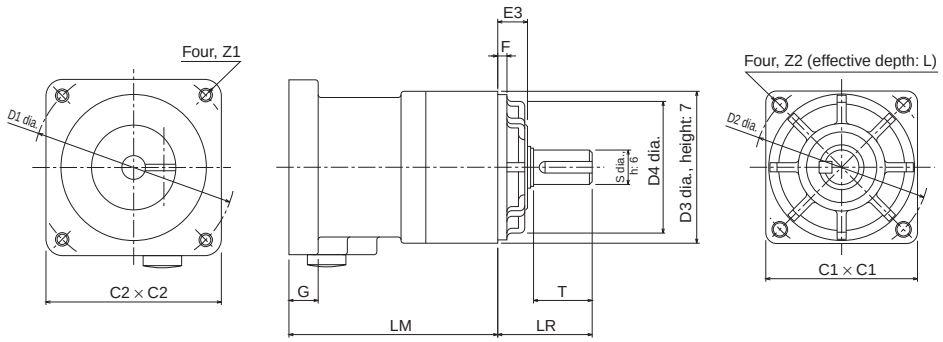

	Dimensions (mm)										Model		
	S	T	Z1	Z2	AT	L	Key dimensions						
							QK	b	h	t1			
	12	20	M4	M5	M3	12	16	4	4	2.5	**R88G-VRSF05B100PCJ**	1/5	100 W
	12	20	M4	M5	M3	12	16	4	4	2.5	**R88G-VRSF09B100PCJ**	1/9	
	12	20	M4	M5	M3	12	16	4	4	2.5	**R88G-VRSF15B100PCJ**	1/15	
	12	20	M4	M5	M3	12	16	4	4	2.5	**R88G-VRSF25B100PCJ**	1/25	
	12	20	M5	M5	M4	12	16	4	4	2.5	**R88G-VRSF05B200PCJ**	1/5	200 W
	19	30	M5	M6	M4	20	22	6	6	3.5	**R88G-VRSF09C200PCJ**	1/9	
	19	30	M5	M6	M4	20	22	6	6	3.5	**R88G-VRSF15C200PCJ**	1/15	
	19	30	M5	M6	M4	20	22	6	6	3.5	**R88G-VRSF25C200PCJ**	1/25	
	19	30	M5	M6	M4	20	22	6	6	3.5	**R88G-VRSF05C400PCJ**	1/5	400 W
	19	30	M5	M6	M4	20	22	6	6	3.5	**R88G-VRSF09C400PCJ**	1/9	
	19	30	M5	M6	M4	20	22	6	6	3.5	**R88G-VRSF15C400PCJ**	1/15	
	19	30	M5	M6	M4	20	22	6	6	3.5	**R88G-VRSF25C400PCJ**	1/25	

Outline Drawings

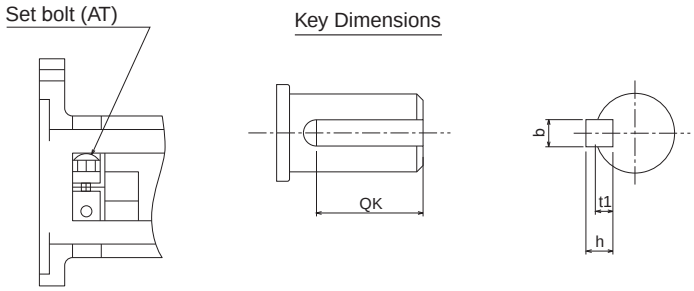

● Parameter Unit

R88A-PR02G

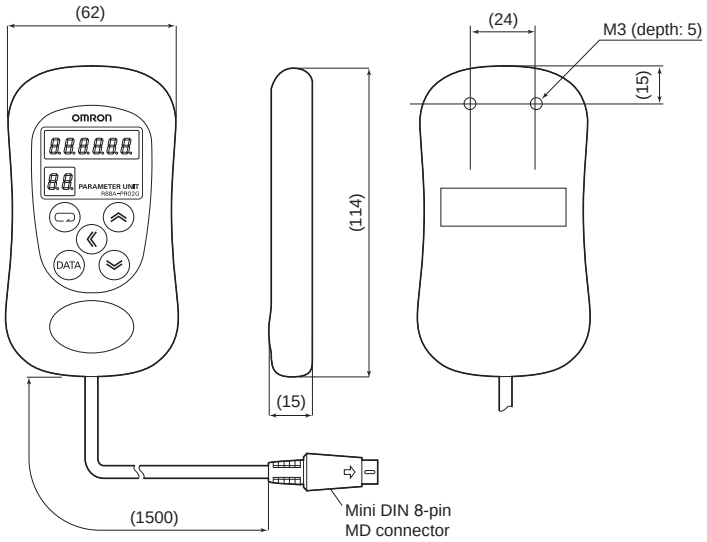

● External Regeneration Resistor

R88A-RR22047S1

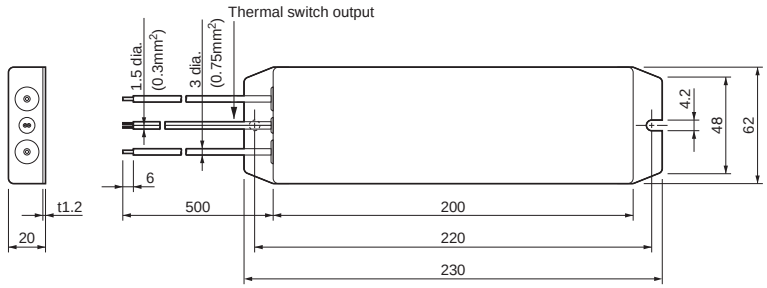

R88A-RR08050S/-RR080100S

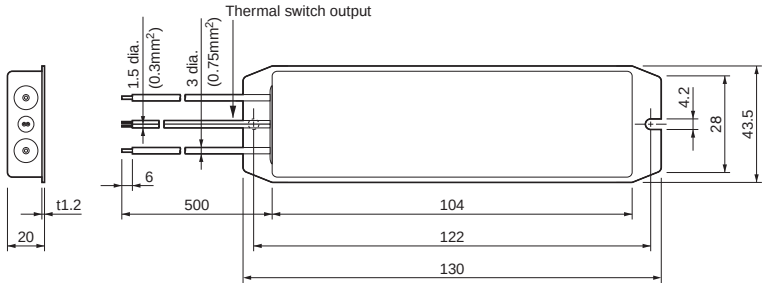

R88A-RR50020S

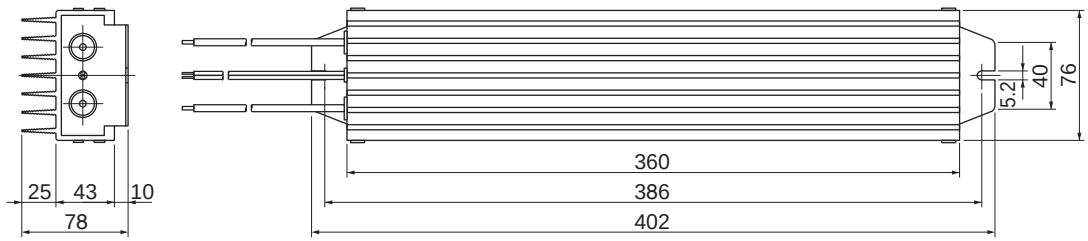

Reactor

3G3AX-DL2002
3G3AX-DL2004

Model	L
3G3AX-DL2002	85
3G3AX-DL2004	95

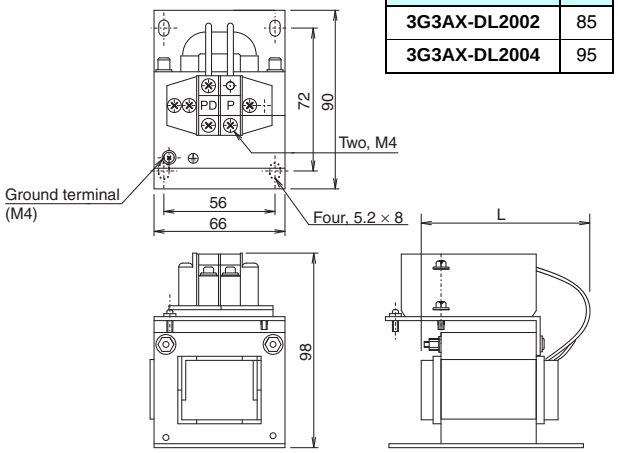

3G3AX-DL2007
3G3AX-DL2015

Model	L
3G3AX-DL2007	105
3G3AX-DL2015	115

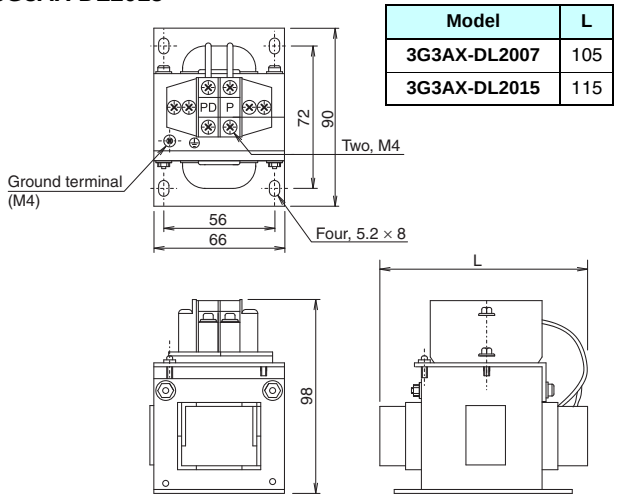

3G3AX-DL2022

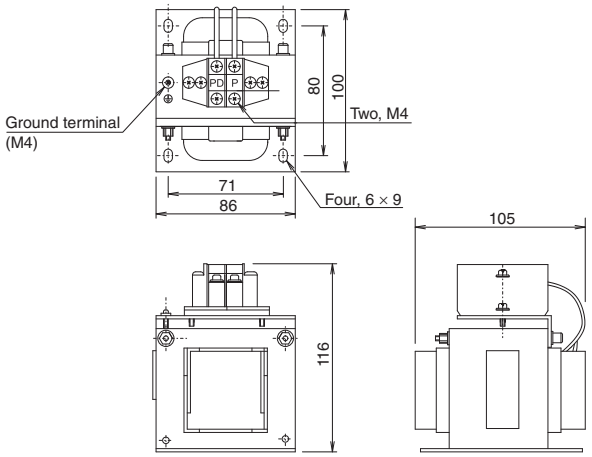

3G3AX-AL2025
3G3AX-AL2055

Model	A	C	Y
3G3AX-AL2025	120	82	67
3G3AX-AL2055	120	98	75

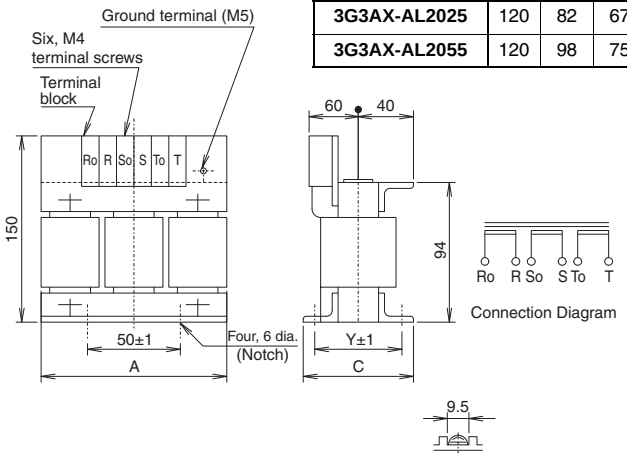

3G3AX-AL2110
3G3AX-AL2220

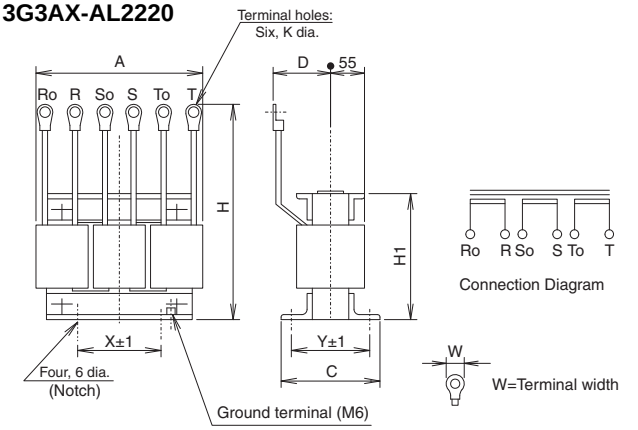

Model	A	C	D	H	H1	X	Y	K	W
3G3AX-AL2110	150	103	70	170	108	60	80	5.3	12
3G3AX-AL2220	180	113	75	190	140	90	90	8.4	16.5

About Manuals

English Cat. No.	Japanese Cat. No.	Type	Name
I566	SBCE-353	R88M-G/R88D-GN□-ML2	G-series AC Servomotors/Servo Drives with Built-in MECHATROLINK-II Communications User's Manual
W453	SBCE-375	CXONE-□□□□C-V□/ □□□□D-V□	CX-Drive OPERATION MANUAL

MEMO

MEMO

MEMO

Read and Understand this Catalog

Please read and understand this catalog before purchasing the product. Please consult your OMRON representative if you have any questions or comments.

Warranty and Limitations of Liability

WARRANTY

OMRON's exclusive warranty is that the products are free from defects in materials and workmanship for a period of one year (or other period if specified) from date of sale by OMRON.

OMRON MAKES NO WARRANTY OR REPRESENTATION, EXPRESS OR IMPLIED, REGARDING NON-INFRINGEMENT, MERCHANTABILITY, OR FITNESS FOR PARTICULAR PURPOSE OF THE PRODUCTS. ANY BUYER OR USER ACKNOWLEDGES THAT THE BUYER OR USER ALONE HAS DETERMINED THAT THE PRODUCTS WILL SUITABLY MEET THE REQUIREMENTS OF THEIR INTENDED USE. OMRON DISCLAIMS ALL OTHER WARRANTIES, EXPRESS OR IMPLIED.

LIMITATIONS OF LIABILITY

OMRON SHALL NOT BE RESPONSIBLE FOR SPECIAL, INDIRECT, OR CONSEQUENTIAL DAMAGES, LOSS OF PROFITS OR COMMERCIAL LOSS IN ANY WAY CONNECTED WITH THE PRODUCTS, WHETHER SUCH CLAIM IS BASED ON CONTRACT, WARRANTY, NEGLIGENCE, OR STRICT LIABILITY.

In no event shall the responsibility of OMRON for any act exceed the individual price of the product on which liability is asserted.

IN NO EVENT SHALL OMRON BE RESPONSIBLE FOR WARRANTY, REPAIR, OR OTHER CLAIMS REGARDING THE PRODUCTS UNLESS OMRON'S ANALYSIS CONFIRMS THAT THE PRODUCTS WERE PROPERLY HANDLED, STORED, INSTALLED, AND MAINTAINED AND NOT SUBJECT TO CONTAMINATION, ABUSE, MISUSE, OR INAPPROPRIATE MODIFICATION OR REPAIR.

Application Considerations

SUITABILITY FOR USE

OMRON shall not be responsible for conformity with any standards, codes, or regulations that apply to the combination of the product in the customer's application or use of the product.

Take all necessary steps to determine the suitability of the product for the systems, machines, and equipment with which it will be used.

Know and observe all prohibitions of use applicable to this product.

NEVER USE THE PRODUCT FOR AN APPLICATION INVOLVING SERIOUS RISK TO LIFE OR PROPERTY WITHOUT ENSURING THAT THE SYSTEM AS A WHOLE HAS BEEN DESIGNED TO ADDRESS THE RISKS, AND THAT THE OMRON PRODUCT IS PROPERLY RATED AND INSTALLED FOR THE INTENDED USE WITHIN THE OVERALL EQUIPMENT OR SYSTEM.

PROGRAMMABLE PRODUCTS

OMRON shall not be responsible for the user's programming of a programmable product, or any consequence thereof.

Disclaimers

CHANGE IN SPECIFICATIONS

Product specifications and accessories may be changed at any time based on improvements and other reasons. Consult with your OMRON representative at any time to confirm actual specifications of purchased product.

DIMENSIONS AND WEIGHTS

Dimensions and weights are nominal and are not to be used for manufacturing purposes, even when tolerances are shown.

PERFORMANCE DATA

Performance data given in this catalog is provided as a guide for the user in determining suitability and does not constitute a warranty. It may represent the result of OMRON's test conditions, and the users must correlate it to actual application requirements. Actual performance is subject to the OMRON Warranty and Limitations of Liability.

OMRON Corporation **Industrial Automation Company**
Tokyo, JAPAN
Contact: www.ia.omron.com

Regional Headquarters
OMRON EUROPE B.V.
Wegalaan 67-69-2132 JD Hoofddorp
The Netherlands
Tel: (31)2356-81-300/Fax: (31)2356-81-388

OMRON ELECTRONICS LLC
One Commerce Drive Schaumburg,
IL 60173-5302 U.S.A.
Tel: (1) 847-843-7900/Fax: (1) 847-843-7787

OMRON ASIA PACIFIC PTE. LTD.
No. 438A Alexandra Road # 05-05/08 (Lobby 2),
Alexandra Technopark,
Singapore 119967
Tel: (65) 6835-3011/Fax: (65) 6835-2711

OMRON (CHINA) CO., LTD.
Room 2211, Bank of China Tower,
200 Yin Cheng Zhong Road,
PuDong New Area, Shanghai, 200120, China
Tel: (86) 21-5037-2222/Fax: (86) 21-5037-2200

Authorized Distributor:

© OMRON Corporation 2009-2012 All Rights Reserved.
In the interest of product improvement,
specifications are subject to change without notice.

CSM_14_1_0514
Cat. No. I814-E1-04
Printed in Japan
0412 (0308)

Mouser Electronics

Authorized Distributor

Click to View Pricing, Inventory, Delivery & Lifecycle Information:

Omron:

R88D-GNA5L-ML2 R88A-CNG01R R88D-GT01L R88D-GN01H-ML2 R88D-GT04H R88D-GT50H R88D-GN02L-ML2 R88D-GT15H R88A-CCG002P2 R88D-GT01H R88D-GT04L R88D-GN01L-ML2 R88D-GT02L R88D-GN02H-ML2 R88D-GT75H R88D-GT10H R88D-GN75H-ML2 R88A-CCG0R5P4 R88D-GT08H R88D-GT20H R88D-GT30H R88A-CNG02R R88D-GN30H-ML2 R88D-GTA5L R88D-GN20H-ML2 R88D-GT02H R88A-CCG001P4 R88D-GN08H-ML2 R88D-GN04H-ML2 R88D-GN10H-ML2 R88D-GN15H-ML2 R88D-GN50H-ML2 R88D-GN04L-ML2 R88A-CRGB003C

Общество с ограниченной ответственностью «МосЧип» ИНН 7719860671 / КПП 771901001
Адрес: 105318, г.Москва, ул.Щербаковская д.3, офис 1107

Данный компонент на территории Российской Федерации

Вы можете приобрести в компании MosChip.

Для оперативного оформления запроса Вам необходимо перейти по данной ссылке:

http://moschip.ru/get-element

Вы можете разместить у нас заказ для любого Вашего проекта, будь то серийное производство или разработка единичного прибора.

В нашем ассортименте представлены ведущие мировые производители активных и пассивных электронных компонентов.

Нашей специализацией является поставка электронной компонентной базы двойного назначения, продукции таких производителей как XILINX, Intel (ex.ALTERA), Vicor, Microchip, Texas Instruments, Analog Devices, Mini-Circuits, Amphenol, Glenair.

Сотрудничество с глобальными дистрибьюторами электронных компонентов, предоставляет возможность заказывать и получать с международных складов практически любой перечень компонентов в оптимальные для Вас сроки.

На всех этапах разработки и производства наши партнеры могут получить квалифицированную поддержку опытных инженеров.

Система менеджмента качества компании отвечает требованиям в соответствии с ГОСТ Р ИСО 9001, ГОСТ РВ 0015-002 и ЭС РД 009

Офис по работе с юридическими лицами:

105318, г.Москва, ул.Щербаковская д.3, офис 1107, 1118, ДЦ «Щербаковский»

Телефон: +7 495 668-12-70 (многоканальный)

Факс: +7 495 668-12-70 (доб.304)

E-mail: info@moschip.ru

Skype отдела продаж:
moschip.ru
moschip.ru_4
moschip.ru_6
moschip.ru_9