Honeywell

# 2 W Conductive Plastic Potentiometers

**380 Series, RV4 Series, 485 Series, 53C Series, 385 Series**

Datasheet

# Conductive Plastic Potentiometers

Potentiometers convert rotary motion into a change of resistance, supplying a smooth transition of voltage or current levels. The resulting voltage output may be used to control position transducers in a wide variety of potential applications.

The five series listed below are all 2 W plastic potentiometers and are available in resistances from 100 Ohm to 5 MOhm, inclusive. Available tapers include linear, log, and antilog to meet a wide range of application requirements. These single turn devices have a 6,35 mm [0.250 in] diameter shaft that is available in a range of lengths. Most shafts are nickel-plated brass. Most configurations have a standard 3/8-32 NEF-2A bushing; a high torque version is also available. Termination types are solder lug (with or without a center tap), PC pin or fast-on, all are solder-dipped. Custom designs are available upon request.

- **380 Series:** 2 W conductive plastic potentiometer offering low contact resistance variation and a long rotational life
- **RV4 Series:** Military version of the 380 Series; meets MIL-R-94 requirements (non RoHS compliant)
- **485 Series:** Custom version of the 380 Series
- **53C Series:** Cost-effective version of the 380 Series
- **385 Series:** Custom version of the 53C Series

## Table of Contents


General Specifications . . . . . 3-6

General Configuration Guide . . . . . 7

380 Series:

Specific Configurations . . . . . 8

Order Guides . . . . . 9-15

RV4 Series:

Specific Configurations . . . . . 16

Order Guides . . . . . .17-18

485 Series:

Specific Configurations . . . . . 19-21

Order Guides . . . . . 22-31

53C Series:

Specific Configurations . . . . . 32

Order Guides . . . . . 33-37

385 Series:

Specific Configurations . . . . . 38-39

Order Guides . . . . . 40-46

Additional Information. . . . . back page


## Key Features and Benefits

- **Cost-effective:** Supplies good performance at a reasonable price
- **Wide range of resistance values (100 Ohm to 5 MOhm, inclusive):** Promotes flexibility in the applications
- **Wide variety of tapers:** Creates flexibility in output signal profile, allowing use in a wide variety of applications

## Potential Applications

### INDUSTRIAL/COMMERCIAL

- Audio and visual equipment (e.g., musical instruments, sound mixers, projectors, amplifiers)
- Foot pedal controls (e.g., guitars, sewing machines, woodworking equipment)
- Machine controls (e.g., joysticks)
- Welding equipment (e.g., MIG wire feed, foot pedal controls, adjustment knobs)

### TRANSPORTATION

- Foot pedal controls (e.g., golf carts)
- Gear shifter, joystick, and throttle position (e.g., construction/ agricultural vehicles)

COST-EFFECTIVE • MIL-R-94 • CUSTOMIZATION AVAILABLE

# General Specifications

**Table 1. Electrical Specifications**

| Characteristic | 380 Series | RV4 Series | 485 Series | 53C Series | 385 Series |
|---|---|---|---|---|---|
| Maximum working voltage:<br>linear tapers<br>log, reverse log tapers | 500 Vdc<br>350 Vdc | | | | |
| Dielectric strength | 1000 Vac for 60 s at 1 mPa [atm], 450 Vac for 60 s at 11,5 kPa [3.4 inHg] | | | | |
| Power rating | 2 W at 70 °C [158 °F], derated to 120 °C [248 °F] | | | | |
| Taper | See Order Guides under each series | | | | |
| CRV[1]:<br>linear tapers<br>log, reverse log tapers | 3% max. total resistance<br>3% max. total resistance | | | | |
| Resistance | 100 Ohm to 5 MOhm, inclusive. See individual Order Guides under each series. | | | | |
| Resistance tolerance | See Order Guides under each series. | | | | |
| End resistance | See Order Guides under each series. | | | | |
| Linearity | ±5% | | | | |
| Electrical rotation | See Order Guides under each series. | | | | |

[1]Contact resistance variation is the maximum momentary change in contact resistance that occurs when the wiper is moved from one location to another location. The larger this change, the more difficult it is to set the trimmer potentiometer and the more unstable the long term setting will be.

**Table 2. Mechanical Specifications**

| Characteristic | 380 Series | RV4 Series | 485 Series | 53C Series | 385 Series |
|---|---|---|---|---|---|
| Shaft:<br>material<br>diameter | nickel-plated brass[1]<br>6,35 mm [0.250 in] | | | | |
| Retaining ring material | nickel-plated brass | | nickel-plated beryllium copper | nickel-plated brass | |
| Bushing:<br>material<br>thread | nickel-plated brass<br>3/8-32 NEF-2A | | | | |
| Termination base material | thermoset | | | | |
| Terminal material | brass; solder (SAC305) dip finish | brass; solder (SAC305) dip or tin-lead finish | brass; solder (SAC305) dip finish | brass; solder (SAC305) dip or tin-lead finish | |
| Housing material | stainless steel | | | | |
| Base material | thermoset plastic | | | | |
| Mounting hardware material:<br>jam nut<br>mounting nut<br>lock washer<br>o-ring | nickel-plated brass<br>nickel-plated brass<br>nickel-plated brass phospher bronze[1]<br>silicone rubber | | | | |
| Operating torque | See Order Guides under each series. | | | | |
| Stop torque | See Order Guides under each series. | | | | |
| Weight (approx.) | 32.7 g [0.072 lb] | | | | |

[1]Unless otherwise specified on the Order Guides under each series.

# General Specifications

**Table 3. Environmental Specifcations**

| Characteristic | 380 Series | RV4 Series | 485 Series | 53C Series | 385 Series |
|---|---|---|---|---|---|
| Operating temperature | -55 °C to 120 °C [-67 °F to 248 °F] | | | | |
| Rotational life | tested to 25,000 cycles | | | | |

**Table 4. Maximum Percent Temporary Resistance from 25 °C [77 °F]**

| Nominal Resistance | Temperature | | | | | | |
|---|---|---|---|---|---|---|---|
| | -55 °C [-67 °F] | -40 °C [-40 °F] | 0 °C [32 °F] | 25 °C [77 °F] | 55 °C [131 °F] | 85 °C [185 °F] | 120 °C [248 °F] |
| 100 Ohm | ±5.0 | ±4.0 | ±1.5 | 0 | ±1.5 | ±2.0 | ±3.5 |
| 10 kOhm | +7.0 | +5.5 | +2.0 | 0 | ±1.5 | ±2.5 | ±5.5 |
| 100 kOhm | +8.0 | +6.0 | +2.5 | 0 | ±2.0 | ±3.5 | ±6.0 |
| 1 MOhm | +10.0 | +8.0 | +3.0 | 0 | ±2.5 | ±4.0 | ±7.5 |

**Figure 1. Electrical Taper Diagrams (For reference only.)**

**Log (Z)**

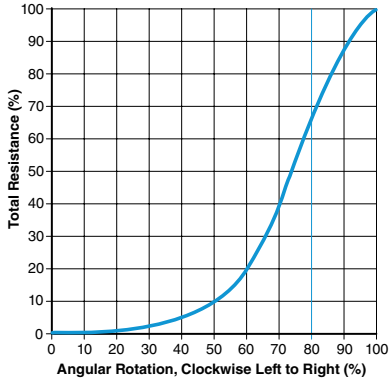


**Reverse Log (RZ)**

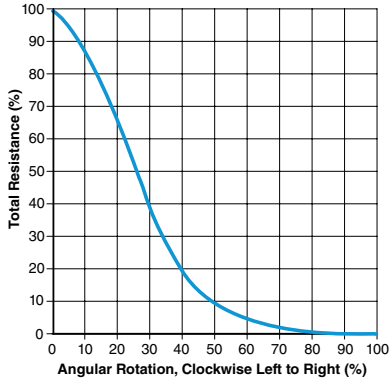


**Linear: 2.5% to 97.5% (S-1)**

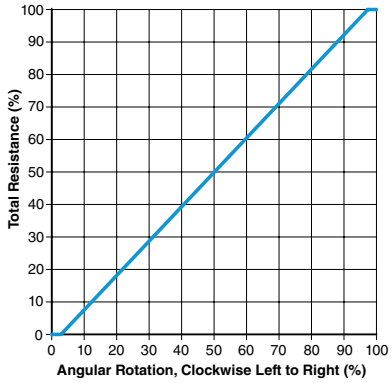


**Linear: 5% to 95% (S-2)**

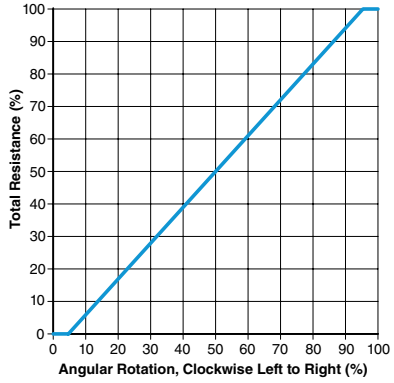


**Linear: 7.5% to 92.5% (S-3)**

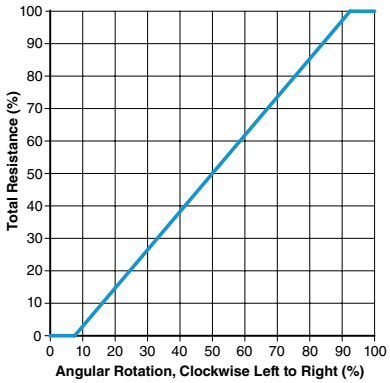


**Linear: 10% to 90% (S-4)**

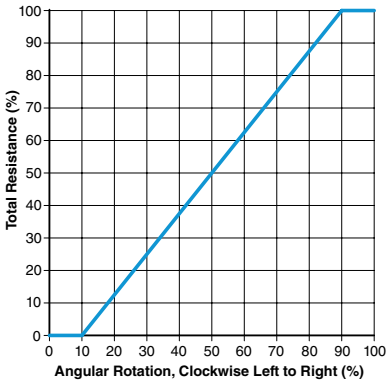

# General Specifications

**Figure 1. Electrical Taper Diagrams (continued)**

### Linear: 15% to 95% (S-5)

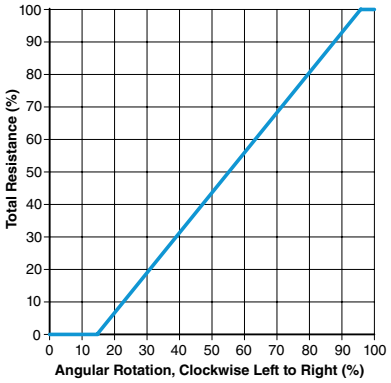


### Linear: 25% to 75% (S-6)

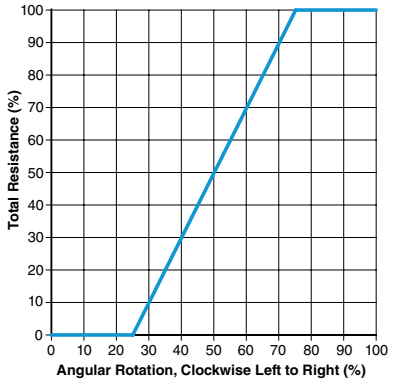


### Linear: 35% to 65% (S-7)

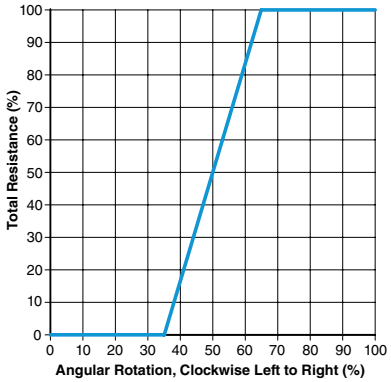


### Linear: 37.5% to 82.5% (S-8)

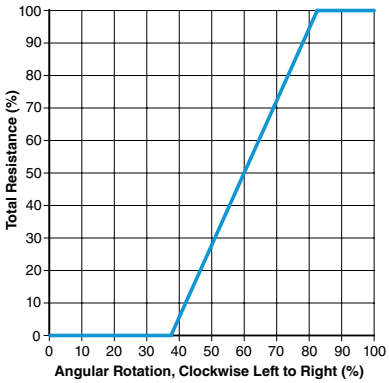


### Linear: 42.5% to 57.5% (S-9)

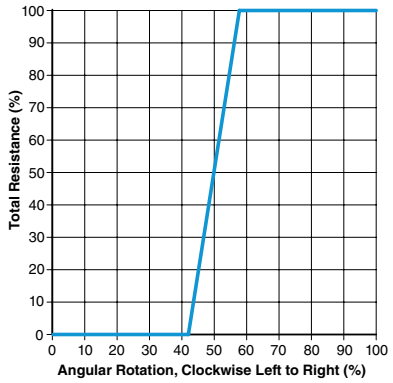


### Linear: 45% to 55% (S-10)

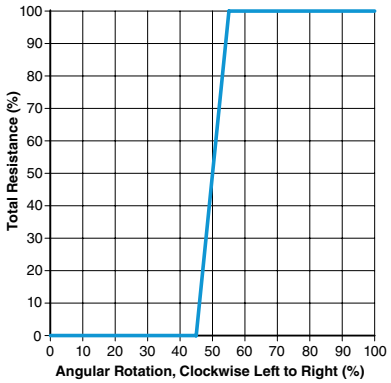


### Linear: 5% to 50%; 50% to 90% (S-11)

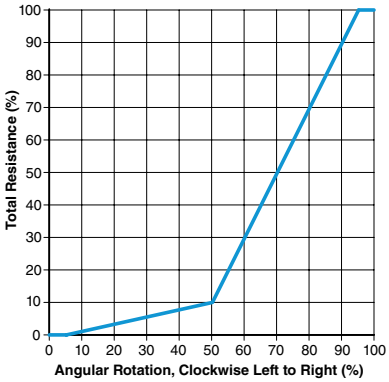


### Linear: 10% to 40%; 57.5% to 82.5% (S-12)

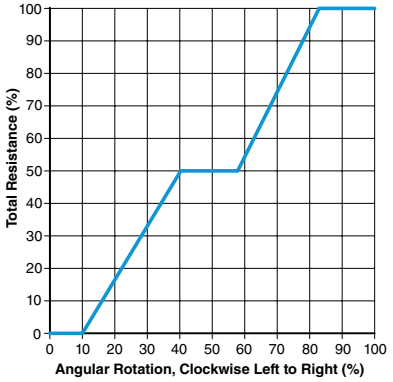


### Linear: 10% to 45%; 55% to 90% (S-13)

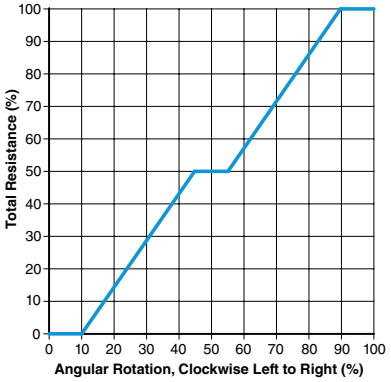


### Linear: 35% to 45%; 55% to 65% (S-14)

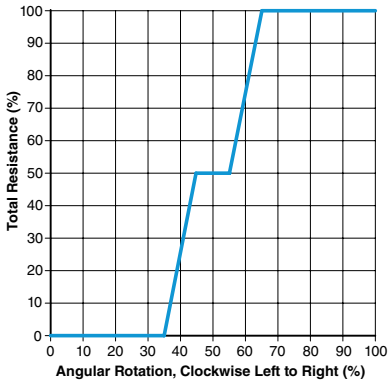


### Linear: 45% to 47.5%; 47.5% to 52.5%; 52.5% to 55% (S-15)

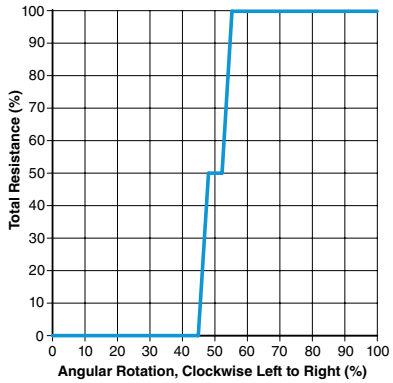


### Linear: 5% to 40%; 45% to 52.5%; 60% to 95% (S-16)

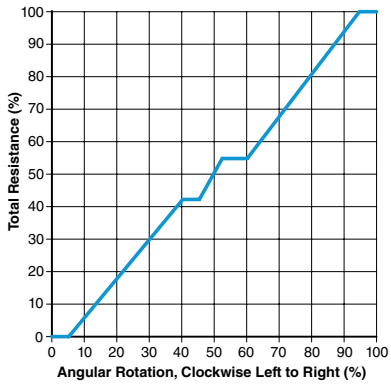

# General Specifications

**Figure 2. Power Derating Curve**

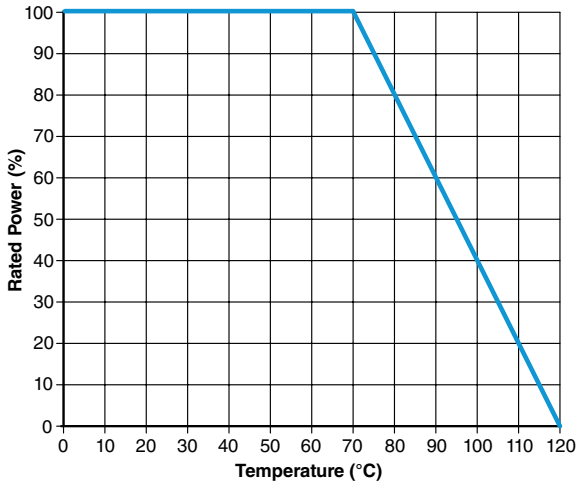


**Figure 3. Mounting Hardware**

| Jam Nut | Mounting Nut | Lock Washer | O-Ring |
|---|---|---|---|
| 7,94 mm [5/16 in] across flats<br>3,97 mm [5/32 in] thick | 1/4 x 32 thread<br>7,94 mm [5/16 in] across flats | 10,32 mm [5/16 in] outside diameter 0,64 mm [0.025 in] thick | 6,35 mm [0.25 in] outside diameter<br>1,78 mm [0.070 in] thick |
| 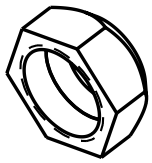 | 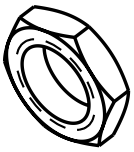 | | |

# General Configuration Guide

**Figure 4. General Configuration Guide**

This figure shows possible configurations. Not all combinations may be available, please contact Honeywell. See the Order Guides for each series on subsequent pages for currently available catalog listings.

**Product Series**

**380 Series, RV4 Series, 485 Series, 53C Series, 385 Series**
2 W Conductive Plastic Potentiometers

**Bushing Type and Length**

3/8-32 NEF-2A:
Standard:
6,35 mm [0.25 in]

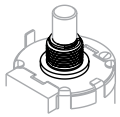

7,92 mm [0.312 in]

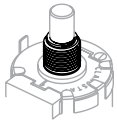

8,69 mm [0.342 in]

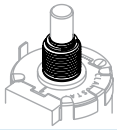

9,27 mm [0.365 in]

9,53 mm [0.375 in]

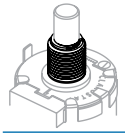

12,7 mm [0.500 in]

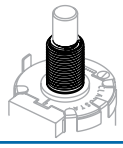

High Torque:
12,7 mm [0.500 in]

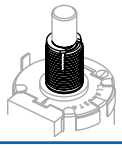

Custom

**Switch**

None

**Shaft Type**

Ø3,18 mm [0.125 in]:
Flatted

Round

Slotted

Straight Knurled

Custom

**Shaft Length**

9,53 mm [0.325][1]
12,7 mm [0.50 in][1]
15,88 mm [0.625 in]
19,05 mm [0.75 in]
22,23 mm [0.875 in]
31,75 mm [1.25 in]
50,8 mm [2.00 in]
63,5 mm [2.50 in]
Custom

[1]Applies to 6,25 mm [0.25 in] bushings only.

**Resistance**

| Significant Digit | Number of Zeros that Follow |
|---|---|
| 10 Ohm | 0 |
| 15 Ohm | 1 |
| 20 Ohm | 2 |
| 25 Ohm | 3 |
| 50 Ohm | 4 |
| | 5 |

**Electrical Taper**

Linear:
2.5% to 97.5%
5% to 95%
7.5% to 92.5%
10% to 90%
15% to 95%
25% to 75%
35% to 65%
37.5% to 82.5%
42.5% to 57.5%
45% to 55%
5% to 50%; 50% to 90%
10% to 40%; 57.5% to 82.5%
10% to 45%; 55% to 90%
10% to 45%; 55% to 90%
35% to 45%; 55% to 65%;
45% to 57.5%; 52.5% to 55%;
5% to 40%; 45% to 52.5%; 60% to 95%
Log
Reverse Log
Custom

**Anti-Rotation (AR) Locating Pin**

No locating pins

One locating pin:
9 o' clock

3 o' clock

Two locating pins

Custom

**Termination Type**

Solder lug

Solder lug with center tap

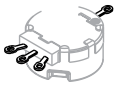

PC pin

Fast-on

Custom

## General 380 Series, RV4 Series, 485 Series, 53C Series, 385 Series Terminology

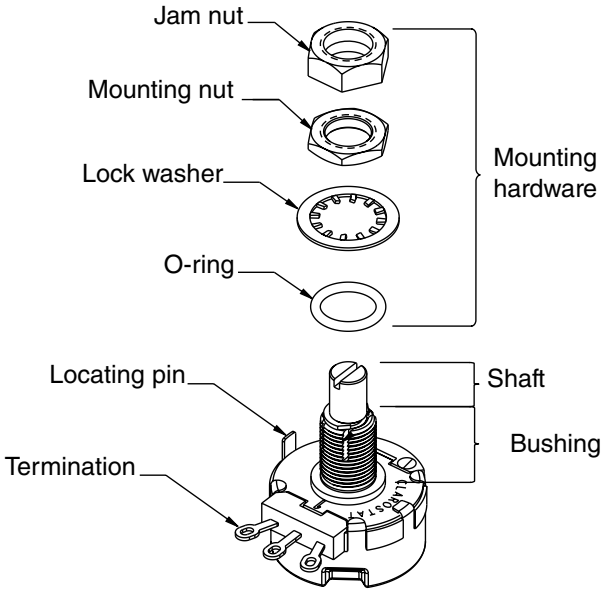

# 380 Series Specific Configurations

**Table 5. 380 Series Specific Configurations**

| Shaft Type | Bushing Type | AR Pin | Termin-ation | Configuration with Associated Hardware |
|---|---|---|---|---|
| **380-A (See Table 380-A on p. 9.)** | | | | 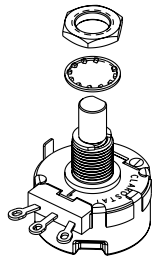 |
| flatted | standard, 9,53 mm [0.375 in] | 1 | solder lug | |
| **380-C (See Table 380-C on p. 10.)** | | | | 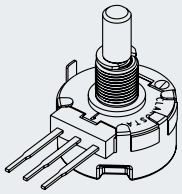 |
| flatted | standard, 9,53 mm [0.375 in] | 1 | PC pin | |
| **380-E (See Table 380-E on p. 12.)** | | | | 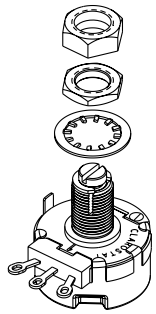 |
| slotted | high torque, 12,7 mm [0.500 in] | 1 | solder lug | |
| **380-G (See Table 380-G on p. 14.)** | | | | 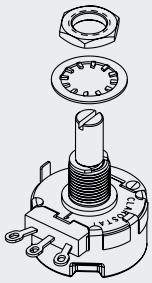 |
| slotted | standard, 9,53 mm [0.375] in | 1 | solder lug | |
| **380-I (See Table 380-I on p. 15.)** | | | | 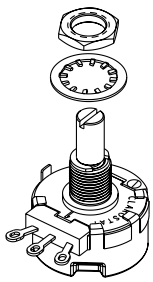 |
| slotted | standard, 9,53 mm [0.375] in | 2 | solder lug | |

| Shaft Type | Bushing Type | AR Pin | Termin-ation | Configuration with Associated Hardware |
|---|---|---|---|---|
| **380-B (See Table 380-B on p. 10.)** | | | | 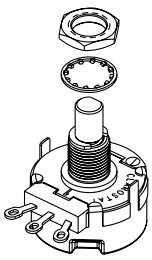 |
| slotted | standard, 9,53 mm [0.375 in] | 2 | solder lug | |
| **380-D (See Table 380-D on p. 11.)** | | | | 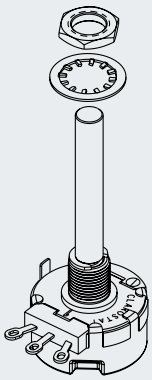 |
| round | standard, 9,53 mm [0.375 in] | 1 | solder lug | |
| **380-F (See Table 380-F on p. 13.)** | | | | 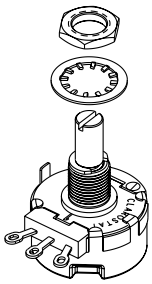 |
| slotted | standard, 9,53 mm [0.375 in] | 1 | solder lug | |
| **380-H (See Table 380-H on p. 14.)** | | | | 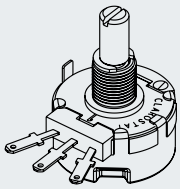 |
| slotted | standard, 9,53 mm [0.375] in | 1 | fast-on | |

# 380 Series Order Guides

**Table 380-A Order Guide**

| Catalog Listing | Electrical | | | | | | | Mechanical | | | | Dimensions | | | | RoHS Compliant | Mounting Hardware |
|---|---|---|---|---|---|---|---|---|---|---|---|---|---|---|---|---|---|
| | Resistance (Ohm) | Resistance Tolerance (±%) | End Resistance at CW, Max. (Ohm) | End Resistance at CCW, Max. (Ohm) | Effective Electrical Rotation, Typ. (Degree) | Electrical Rotation, ±3 (Degree) | Taper | Mechanical Rotation (Degree) | Operating Torque (mN m [in-oz]) | Stop Torque (N m [in-lb]) | Shaft Seal | A<br>Flat Length (mm [in]) | B<br>Flat Thickness (mm [in]) | C<br>Shaft Length (mm [in]) | D<br>Bushing Length (mm [in]) | | |
| 380000M8629 | 1 k | 10 | 4 | 4 | 274 | 312 | S-4 | 312 | 1-4 [7-28] | 12 [1.4] | no | 7,95 [0.313] | 5,54 [0.218] | 19,46 [0.766] | 9,53 [0.375] | yes | unassembled |
| 380000M8630 | 2.5 k | 10 | 4 | 4 | 274 | 312 | S-4 | 312 | 1-4 [7-28] | 12 [1.4] | no | 7,95 [0.313] | 5,54 [0.218] | 19,46 [0.766] | 9,53 [0.375] | yes | unassembled |
| 380000M8643 | 1 k | 10 | 4 | 4 | 274 | 312 | S-4 | 312 | 1-4 [7-28] | 12 [1.4] | no | 14,30 [0.563] | 5,54 [0.218] | 25,4 [1.000] | 9,53 [0.375] | yes | unassembled |
| 380000M8682 | 50 k | 10 | 4 | 4 | 274 | 312 | S-4 | 312 | 1-4 [7-28] | 12 [1.4] | no | 7,95 [0.313] | 5,54 [0.218] | 19,46 [0.766] | 9,53 [0.375] | yes | unassembled |
| 380017M0007[1,2] | 500 | 10 | 4 | 4 | 274 | 312 | S-4 | 312 | 6 [7-42] | 12 [1.4] | yes | 7,95 [0.313] | 5,54 [0.218] | 22,23 [0.875] | 9,53 [0.375] | no | unassembled |
| 380017M8606 | 10 k | 10 | 4 | 4 | 274 | 312 | S-4 | 312 | 6 [7-42] | 12 [1.4] | yes | 7,95 [0.313] | 5,54 [0.218] | 19,05 [0.750] | 9,53 [0.375] | yes | unassembled |
| 380017M8768[1] | 25 k | 10 | 4 | 4 | 274 | 312 | S-4 | 312 | 6 [7-42] | 12 [1.4] | yes | 7,95 [0.313] | 5,54 [0.218] | 19,05 [0.750] | 9,53 [0.375] | yes | unassembled |
| 380017M9550[1] | 5 k | 10 | 4 | 4 | 274 | 312 | S-4 | 312 | 6 [7-42] | 12 [1.4] | yes | 7,95 [0.313] | 5,54 [0.218] | 19,05 [0.750] | 9,53 [0.375] | yes | unassembled |

**Dimensional Drawings (For reference only: mm [in].)**

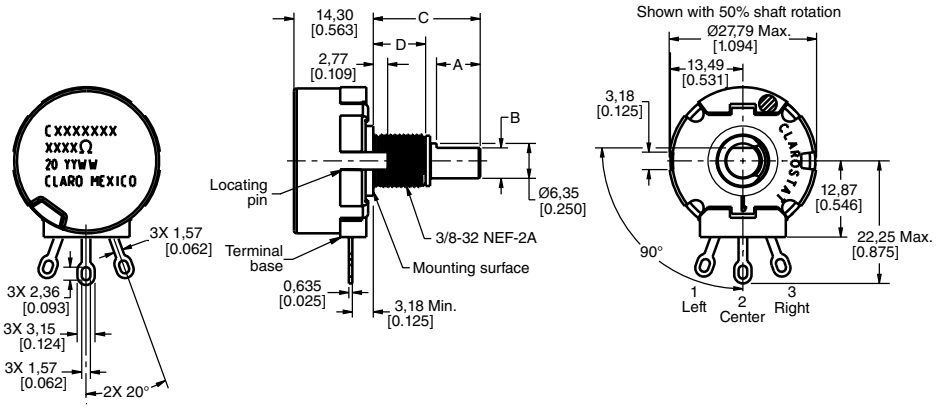


[1]Supplied with nickel-plated, phosphor bronze lock washer.
[2]Supplied with two mounting nuts.

# 380 Series Order Guides

### Table 380-B Order Guide

| Catalog Listing | Electrical | | | | | | | Mechanical | | | | Dimensions | | | | RoHS Compliant | Mounting Hardware |
|---|---|---|---|---|---|---|---|---|---|---|---|---|---|---|---|---|---|
| | Resistance (Ohm) | Resistance Tolerance (±%) | End Resistance at CW, Max. (Ohm) | End Resistance at CCW, Max. (Ohm) | Effective Electrical Rotation, Typ. (Degree) | Electrical Rotation, ±3 (Degree) | Taper | Mechanical Rotation (Degree) | Operating Torque (mN m [in-oz]) | Stop Torque (N m [in-lb]) | Shaft Seal | A<br>Flat Length (mm [in]) | B<br>Flat Thickness (mm [in]) | C<br>Shaft Length (mm [in]) | D<br>Bushing Length (mm [in]) | | |
| 3800017M8956 | 10 k | 10 | 4 | 4 | 274 | 312 | S-4 | 312 | 1-6 [7-42] | 12 [1.4] | yes | 7.95 [0.313] | 5,54 [0.218] | 19,05 [0.750] | 9,53 [0.375] | yes | unassembled |

### Dimensional Drawings (For reference only: mm [in].)

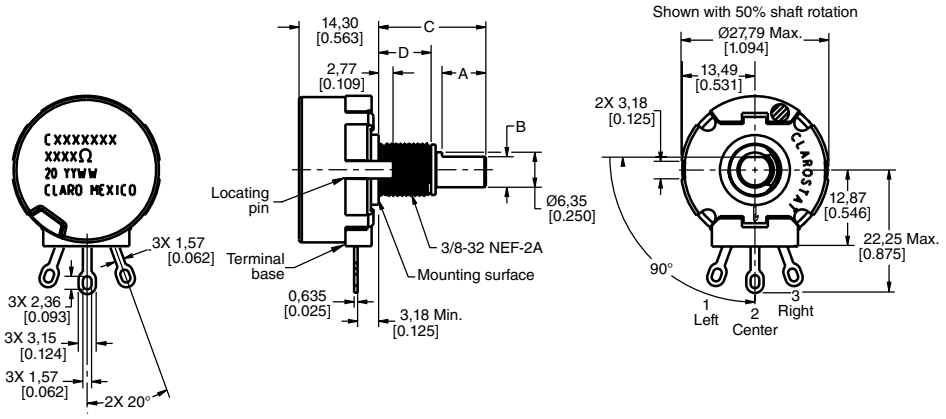


### Table 380-C Order Guide

| Catalog Listing | Electrical | | | | | | | Mechanical | | | | Dimensions | | | | RoHS Compliant | Mounting Hardware |
|---|---|---|---|---|---|---|---|---|---|---|---|---|---|---|---|---|---|
| | Resistance (Ohm) | Resistance Tolerance (±%) | End Resistance at CW, Max. (Ohm) | End Resistance at CCW, Max. (Ohm) | Effective Electrical Rotation, Typ. (Degree) | Electrical Rotation, ±3 (Degree) | Taper | Mechanical Rotation (Degree) | Operating Torque (mN m [in-oz]) | Stop Torque (N m [in-lb]) | Shaft Seal | A<br>Flat Length (mm [in]) | B<br>Flat Thickness (mm [in]) | C<br>Shaft Length (mm [in]) | D<br>Bushing Length (mm [in]) | | |
| 380096M9088 | 10 k | 10 | 4 | 4 | 288 | 312 | S-2 | 312 | 1-6 [7-42] | 12 [1.4] | yes | 9,53 [0.375] | 5,54 [0.218] | 22,23 [0.875] | 9,27 [0.365] | yes | none |

### Dimensional Drawings (For reference only: mm [in].)

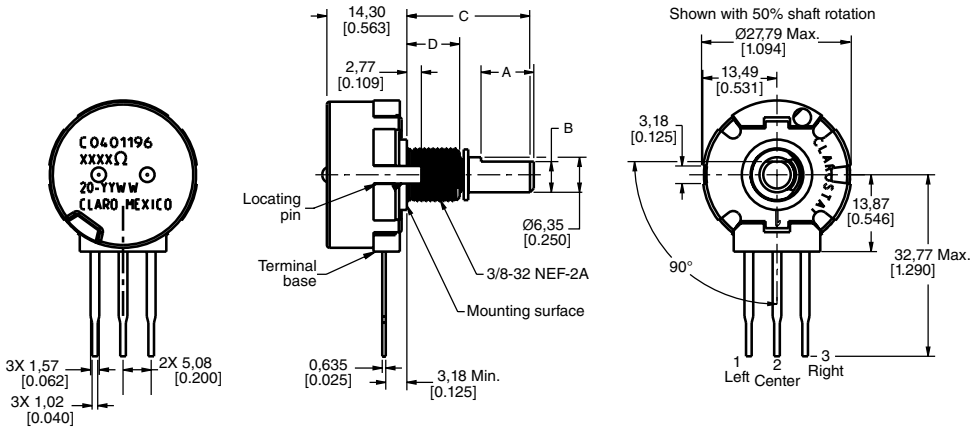

# 380 Series Order Guides

**Table 380-D Order Guide**

| Catalog Listing | Electrical | | | | | | | Mechanical | | | | Dimensions | | RoHS Compliant | Mounting Hardware |
|---|---|---|---|---|---|---|---|---|---|---|---|---|---|---|---|
| | Resistance (Ohm) | Resistance Tolerance (±%) | End Resistance at CW, Max. (Ohm) | End Resistance at CCW, Max. (Ohm) | Effective Electrical Rotation, Typ. (Degree) | Electrical Rotation, ±3 (Degree) | Taper | Mechanical Rotation (Degree) | Operating Torque (mN m [in-oz]) | Stop Torque (N m [in-lb]) | Shaft Seal | A<br>Shaft Length (mm [in]) | B<br>Bushing Length (mm [in]) | | |
| 380C1100 | 100 | 10 | 4 | 4 | 274 | 312 | S-4 | 312 | 1-4 [7-28] | 12 [1.4] | no | 50,8 [2.000] | 9,53 [0.375] | yes | unassembled |
| 380C11000 | 1000 | 10 | 4 | 4 | 274 | 312 | S-4 | 312 | 1-4 [7-28] | 12 [1.4] | no | 50,8 [2.000] | 9,53 [0.375] | yes | unassembled |
| 380C1100K | 100 k | 10 | 4 | 4 | 274 | 312 | S-4 | 312 | 1-4 [7-28] | 12 [1.4] | no | 50,8 [2.000] | 9,53 [0.375] | yes | unassembled |
| 380C110K | 10 k | 10 | 4 | 4 | 274 | 312 | S-4 | 312 | 1-4 [7-28] | 12 [1.4] | no | 50,8 [2.000] | 9,53 [0.375] | yes | unassembled |
| 380C11MEG | 1 M | 10 | 10 | 10 | 274 | 312 | S-4 | 312 | 1-4 [7-28] | 12 [1.4] | no | 50,8 [2.000] | 9,53 [0.375] | yes | unassembled |
| 380C12000 | 2 k | 10 | 4 | 4 | 274 | 312 | S-4 | 312 | 1-4 [7-28] | 12 [1.4] | no | 50,8 [2.000] | 9,53 [0.375] | yes | unassembled |
| 380C120K | 20 k | 10 | 4 | 4 | 274 | 312 | S-4 | 312 | 1-4 [7-28] | 12 [1.4] | no | 50,8 [2.000] | 9,53 [0.375] | no | unassembled |
| 380C1250 | 250 | 10 | 4 | 4 | 274 | 312 | S-4 | 312 | 1-4 [7-28] | 12 [1.4] | no | 50,8 [2.000] | 9,53 [0.375] | yes | unassembled |
| 380C12500 | 2.5 k | 10 | 4 | 4 | 274 | 312 | S-4 | 312 | 1-4 [7-28] | 12 [1.4] | no | 50,8 [2.000] | 9,53 [0.375] | yes | unassembled |
| 380C125K | 25 k | 10 | 4 | 4 | 274 | 312 | S-4 | 312 | 1-4 [7-28] | 12 [1.4] | no | 50,8 [2.000] | 9,53 [0.375] | yes | unassembled |
| 380C135K | 35 k | 10 | 4 | 4 | 274 | 312 | S-4 | 312 | 1-4 [7-28] | 12 [1.4] | no | 50,8 [2.000] | 9,53 [0.375] | yes | unassembled |
| 380C1500 | 500 | 10 | 4 | 4 | 274 | 312 | S-4 | 312 | 1-4 [7-28] | 12 [1.4] | no | 50,8 [2.000] | 9,53 [0.375] | yes | unassembled |
| 380C15000 | 5 k | 10 | 4 | 4 | 274 | 312 | S-4 | 312 | 1-4 [7-28] | 12 [1.4] | no | 50,8 [2.000] | 9,53 [0.375] | yes | unassembled |
| 380C1500K | 500 k | 10 | 10 | 10 | 274 | 312 | S-4 | 312 | 1-4 [7-28] | 12 [1.4] | no | 50,8 [2.000] | 9,53 [0.375] | yes | unassembled |
| 380C150K | 50 k | 10 | 4 | 4 | 274 | 312 | S-4 | 312 | 1-4 [7-28] | 12 [1.4] | no | 50,8 [2.000] | 9,53 [0.375] | yes | unassembled |

**Dimensional Drawings (For reference only: mm [in].)**

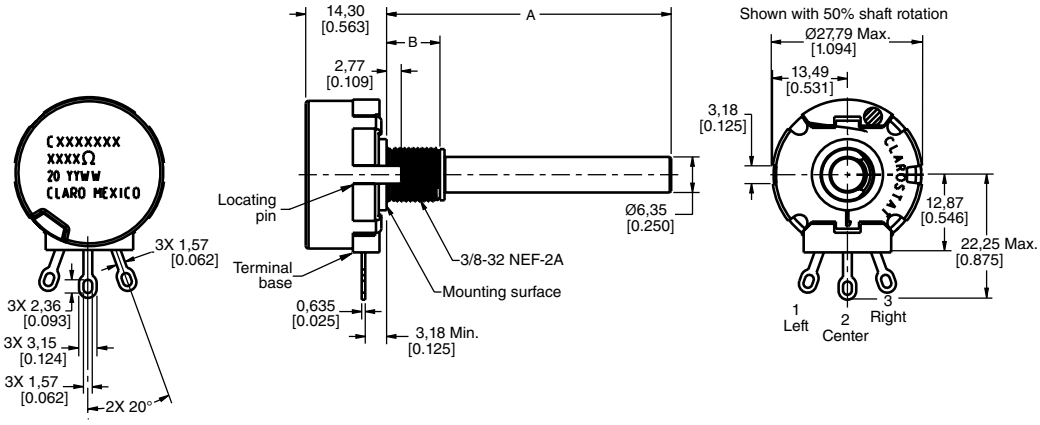

# 380 Series Order Guides

**Table 380-E Order Guide**

| Catalog Listing | Electrical | | | | | | | Mechanical | | | | Dimensions | | | | RoHS Compliant | Mounting Hardware |
|---|---|---|---|---|---|---|---|---|---|---|---|---|---|---|---|---|---|
| | Resistance (Ohm) | Resistance Tolerance (±%) | End Resistance at CW, Max. (Ohm) | End Resistance at CCW, Max. (Ohm) | Effective Electrical Rotation, Typ. (Degree) | Electrical Rotation, ±3 (Degree) | Taper | Mechanical Rotation (Degree) | Operating Torque (mN m [in-oz]) | Stop Torque (N m [in-lb]) | Shaft Seal | A<br>Slot Depth (mm [in]) | B<br>Slot Width (mm [in]) | C<br>Shaft Length (mm [in]) | D<br>Bushing Length (mm [in]) | | |
| 380C2000 | 1 k | 10 | 4 | 4 | 274 | 312 | S-4 | 312 | 1-4 [7-28] | 12 [1.4] | no | 1,60 [0.063] | 1,19 [0.047] | 15,88 [0.625] | 12,7 [0.500] | yes | unassembled |
| 380C210K | 10 k | 10 | 4 | 4 | 274 | 312 | S-4 | 312 | 1-4 [7-28 | 12 [1.4] | no | 1,60 [0.063] | 1,19 [0.047] | 15,88 [0.625] | 12,7 [0.500] | yes | unassembled |
| 380C225K | 25 k | 10 | 4 | 4 | 274 | 312 | S-4 | 312 | 1-4 [7-28] | 12 [1.4] | no | 1,60 [0.063] | 1,19 [0.047] | 15,88 [0.625] | 12,7 [0.500] | yes | unassembled |
| 380C25000 | 5 k | 10 | 4 | 4 | 274 | 312 | S-4 | 312 | 1-4 [7-28 | 12 [1.4] | no | 1,60 [0.063] | 1,19 [0.047] | 15,88 [0.625] | 12,7 [0.500] | yes | unassembled |

**Dimensional Drawings (For reference only: mm [in].)**

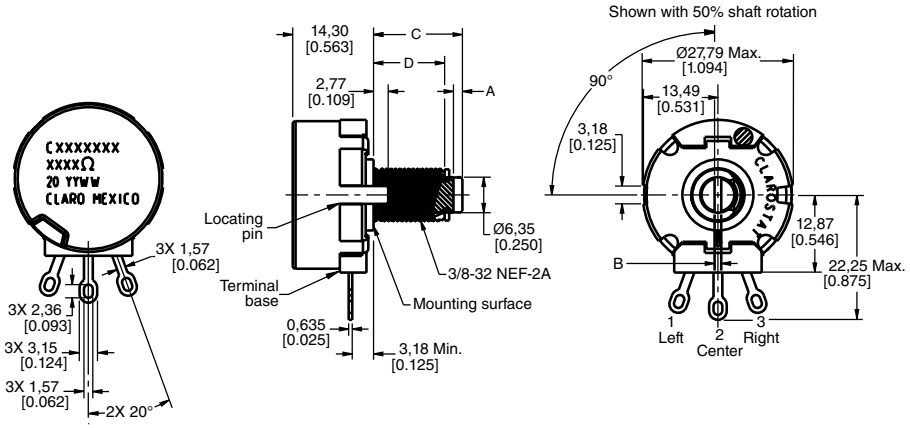

# 380 Series Order Guides

**Table 380-F Order Guide**

| Catalog Listing | Electrical | | | | | | | Mechanical | | | | Dimensions | | | | RoHS Compliant | Mounting Hardware |
|---|---|---|---|---|---|---|---|---|---|---|---|---|---|---|---|---|---|
| | Resistance (Ohm) | Resistance Tolerance (±%) | End Resistance at CW, Max. (Ohm) | End Resistance at CCW, Max. (Ohm) | Effective Electrical Rotation, Typ. (Degree) | Electrical Rotation, ±3 (Degree) | Taper | Mechanical Rotation (Degree) | Operating Torque (mN m [in-oz]) | Stop Torque (N m [in-lb]) | Shaft Seal | A<br>Slot Length (mm [in]) | B<br>Slot Width (mm [in]) | C<br>Shaft Length (mm [in]) | D<br>Bushing Length (mm [in]) | | |
| 380C3100 | 100 | 10 | 4 | 4 | 274 | 312 | S-4 | 312 | 1-4 [7-28] | 12 [1.4] | no | 1,60 [0.063] | 1,19 [0.047] | 22,23 [0.875] | 9,53 [0.375] | yes | unassembled |
| 380C31000 | 1 k | 10 | 4 | 4 | 274 | 312 | S-4 | 312 | 1-4 [7-28] | 12 [1.4] | no | 1,60 [0.063] | 1,19 [0.047] | 22,23 [0.875] | 9,53 [0.375] | yes | unassembled |
| 380C3100K | 100 k | 10 | 4 | 4 | 274 | 312 | S-4 | 312 | 1-4 [7-28] | 12 [1.4] | no | 1,60 [0.063] | 1,19 [0.047] | 22,23 [0.875] | 9,53 [0.375] | yes | unassembled |
| 380C310K | 10 k | 10 | 4 | 4 | 274 | 312 | S-4 | 312 | 1-4 [7-28] | 12 [1.4] | no | 1,60 [0.063] | 1,19 [0.047] | 22,23 [0.875] | 9,53 [0.375] | yes | unassembled |
| 380C31MEG | 1 M | 10 | 10 | 10 | 274 | 312 | S-4 | 312 | 1-4 [7-28] | 12 [1.4] | no | 1,60 [0.063] | 1,19 [0.047] | 22,23 [0.875] | 9,53 [0.375] | yes | unassembled |
| 380C32000 | 2 k | 10 | 4 | 4 | 274 | 312 | S-4 | 312 | 1-4 [7-28] | 12 [1.4] | no | 1,60 [0.063] | 1,19 [0.047] | 22,23 [0.875] | 9,53 [0.375] | yes | unassembled |
| 380C3200K | 200 k | 10 | 4 | 4 | 274 | 312 | S-4 | 312 | 1-4 [7-28] | 12 [1.4] | no | 1,60 [0.063] | 1,19 [0.047] | 22,23 [0.875] | 9,53 [0.375] | no | unassembled |
| 380C3250 | 250 | 10 | 4 | 4 | 274 | 312 | S-4 | 312 | 1-4 [7-28] | 12 [1.4] | no | 1,60 [0.063] | 1,19 [0.047] | 22,23 [0.875] | 9,53 [0.375] | no | unassembled |
| 380C32500 | 2.5 k | 10 | 4 | 4 | 274 | 312 | S-4 | 312 | 1-4 [7-28] | 12 [1.4] | no | 1,60 [0.063] | 1,19 [0.047] | 22,23 [0.875] | 9,53 [0.375] | yes | unassembled |
| 380C3250K | 250 k | 10 | 10 | 10 | 274 | 312 | S-4 | 312 | 1-4 [7-28] | 12 [1.4] | no | 1,60 [0.063] | 1,19 [0.047] | 22,23 [0.875] | 9,53 [0.375] | yes | unassembled |
| 380C325K | 25 k | 10 | 4 | 4 | 274 | 312 | S-4 | 312 | 1-4 [7-28] | 12 [1.4] | no | 1,60 [0.063] | 1,19 [0.047] | 22,23 [0.875] | 9,53 [0.375] | yes | unassembled |
| 380C3500 | 500 | 10 | 4 | 4 | 274 | 312 | S-4 | 312 | 1-4 [7-28] | 12 [1.4] | no | 1,60 [0.063] | 1,19 [0.047] | 22,23 [0.875] | 9,53 [0.375] | yes | unassembled |
| 380C35000 | 5 k | 10 | 4 | 4 | 274 | 312 | S-4 | 312 | 1-4 [7-28] | 12 [1.4] | no | 1,60 [0.063] | 1,19 [0.047] | 22,23 [0.875] | 9,53 [0.375] | yes | unassembled |
| 380C3500K | 500 k | 10 | 10 | 10 | 274 | 312 | S-4 | 312 | 1-4 [7-28] | 12 [1.4] | no | 1,60 [0.063] | 1,19 [0.047] | 22,23 [0.875] | 9,53 [0.375] | yes | unassembled |
| 380C350K | 50 k | 10 | 4 | 4 | 274 | 312 | S-4 | 312 | 1-4 [7-28] | 12 [1.4] | no | 1,60 [0.063] | 1,19 [0.047] | 22,23 [0.875] | 9,53 [0.375] | yes | unassembled |

**Dimensional Drawings (For reference only: mm [in].)**

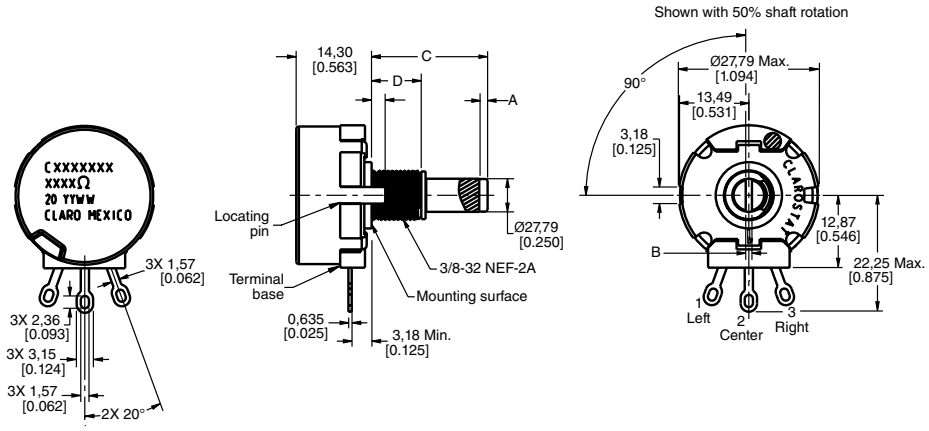

# 380 Series Order Guides

### Table 380-G Order Guide

| Catalog Listing | Electrical | | | | | | | Mechanical | | | | Dimensions | | | | RoHS Compliant | Mounting Hardware |
|---|---|---|---|---|---|---|---|---|---|---|---|---|---|---|---|---|---|
| | Resistance (Ohm) | Resistance Tolerance (±%) | End Resistance at CW, Max. (Ohm) | End Resistance at CCW, Max. (Ohm) | Effective Electrical Rotation, Typ. (Degree) | Electrical Rotation, ±3 (Degree) | Taper | Mechanical Rotation (Degree) | Operating Torque (mN m [in-oz]) | Stop Torque (N m [in-lb]) | Shaft Seal | A<br>Slot Depth (mm [in]) | B<br>Slot Width (mm [in]) | C<br>Shaft Length (mm [in]) | D<br>BusingLength (mm [in]) | | |
| 380000074850005 8 | 500 k | 10 | 5 | 10 | 274 | 312 | Z | 312 | 1-6 [7-42] | 12 [1.4] | no | 1,60 [0.063] | 1,19 [0.047] | 22,23 [0.875] | 9,53 [0.375] | yes | unassembled |
| 380101M9699[1,2] | 2.5 M | 10 | 25 | 10 | 274 | 312 | Z | 312 | 1-6 [7-42] | 12 [1.4] | yes | 1,60 [0.063] | 1,19 [0.047] | 22,23 [0.875] | 9,53 [0.375] | yes | unassembled |

**Dimensional Drawings (For reference only: mm [in].)**

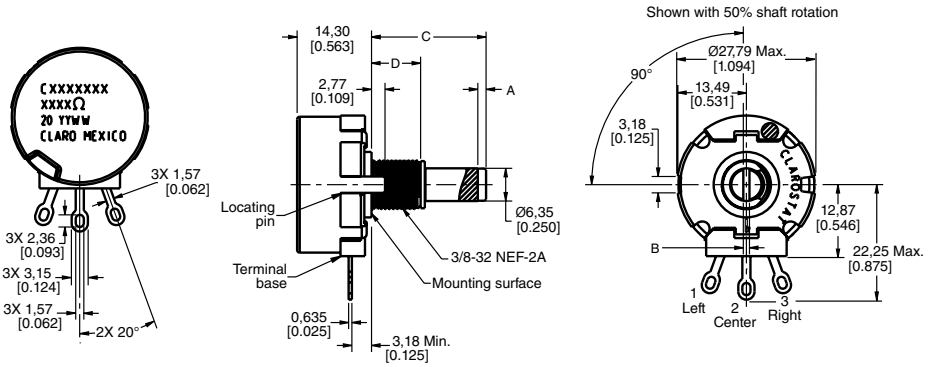


[1]Supplied with stainless-steel shaft.
[2]Supplied with nickel-plated beryllium copper retaining ring.

### Table 380-H Order Guide

| Catalog Listing | Electrical | | | | | | | Mechanical | | | | Dimensions | | | | RoHS Compliant | Mounting Hardware |
|---|---|---|---|---|---|---|---|---|---|---|---|---|---|---|---|---|---|
| | Resistance (Ohm) | Resistance Tolerance (±%) | End Resistance at CW, Max. (Ohm) | End Resistance at CCW, Max. (Ohm) | Effective Electrical Rotation, Typ. (Degree) | Electrical Rotation, ±3 (Degree) | Taper | Mechanical Rotation (Degree) | Operating Torque (mN m [in-oz]) | Stop Torque (N m [in-lb]) | Shaft Seal | A<br>Slot Length (mm [in]) | B<br>Slot Width (mm [in]) | C<br>Shaft Length (mm [in]) | D<br>Bushing Length (mm [in]) | | |
| 380099M9425 | 1 k | 10 | 4 | 4 | 288 | 312 | S-2 | 312 | 6-20 [42-141] | 12 [1.4] | no | 1,60 [0.063] | 1,19 [0.047] | 22,23 [0.875] | 9,53 [0.375] | yes | unassembled |

**Dimensional Drawings (For reference only: mm [in].)**

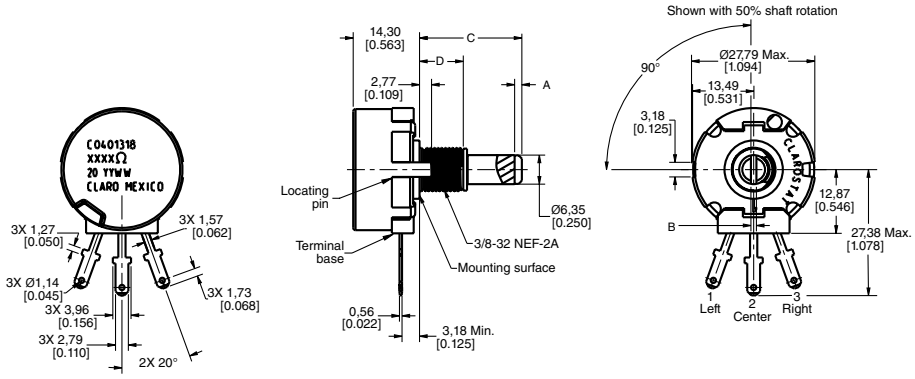

# 380 Series Order Guides

**Table 380-I Order Guide**

| Catalog Listing | Electrical | | | | | | | Mechanical | | | | Dimensions | | | | RoHS Compliant | Mounting Hardware |
|---|---|---|---|---|---|---|---|---|---|---|---|---|---|---|---|---|---|
| | Resistance (Ohm) | Resistance Tolerance (±%) | End Resistance at CW, Max. (Ohm) | End Resistance at CCW, Max. (Ohm) | Effective Electrical Rotation, Typ. (Degree) | Electrical Rotation, ±3 (Degree) | Taper | Mechanical Rotation (Degree) | Operating Torque (mN m [in-oz]) | Stop Torque (N m [in-lb]) | Shaft Seal | A<br>Slot Depth (mm [in]) | B<br>Slot Width (mm [in]) | C<br>Shaft Length (mm [in]) | D<br>Bushing Length (mm [in]) | | |
| 380036M7444 | 1 k | 10 | 4 | 4 | 310 | 344 | S-3 | 360 | 1-4 [7-28] | 12 [1.4] | no | 1,60 [0.063] | 1,19 [0.047] | 22,23 [0.875] | 9,53 [0.375] | yes | unassembled |

**Dimensional Drawings (For reference only: mm [in].)**

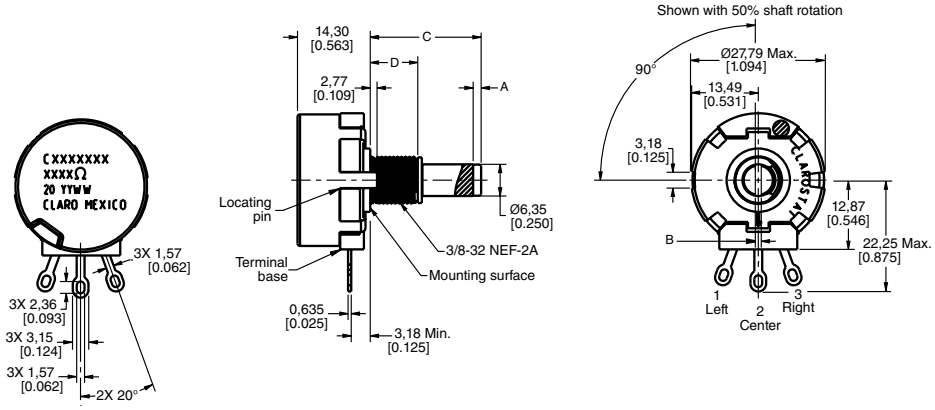

# RV4 Series Specific Configurations

**Table 6. RV4 Series Specific Configurations**

| Shaft Type | Bushing Type | AR Pin | Termin-ation | Configuration with Associated Hardware | Shaft Type | Bushing Type | AR Pin | Termin-ation | Configuration with Associated Hardware |
|---|---|---|---|---|---|---|---|---|---|
| RV4-A (See Table RV4-A on p. 17.) | | | | | RV4-B (See Table RV4-B on p. 18.) | | | | |
| slotted | high torque, 12,7 mm [0.500 in] | 1 | solder lug | 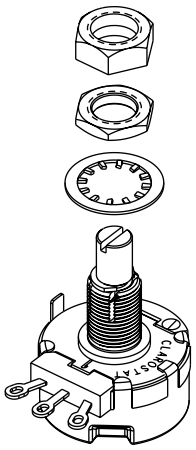 | slotted | standard, 9,53 mm [0.375 in] | 1 | solder lug | 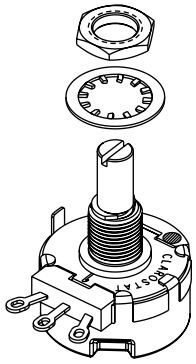 |

# RV4 Series Order Guides

### Table RV4-A Order Guide

| Catalog Listing | Electrical | | | | | | | Mechanical | | | | Dimensions | | RoHS Compliant | Mounting Hardware |
|---|---|---|---|---|---|---|---|---|---|---|---|---|---|---|---|
| | Resistance (Ohm) | Resistance Tolerance (±%) | End Resistance at CW, Max. (Ohm) | End Resistance at CCW, Max. (Ohm) | Effective Electrical Rotation, Typ. (Degree) | Electrical Rotation, ±3 (Degree) | Taper | Mechanical Rotation (Degree) | Operating Torque (mN m [in-oz]) | Stop Torque (N m [in-lb]) | Shaft Seal | A<br>Shaft Length (mm [in]) | B<br>Bushing Length (mm [in]) | | |
| RV4LAYSD102A | 1 k | 10 | 4 | 4 | 274 | 312 | S-4 | 312 | 1-6 [7-42] | 12 [1.4] | no | 22,23 [0.875] | 12,7 [0.500] | no | unassembled |
| RV4LAYSD103A | 10 k | 10 | 4 | 4 | 274 | 312 | S-4 | 312 | 1-6 [7-42] | 12 [1.4] | no | 22,23 [0.875] | 12,7 [0.500] | no | unassembled |
| RV4LAYSD104A | 100 k | 10 | 4 | 4 | 274 | 312 | S-4 | 312 | 1-6 [7-42] | 12 [1.4] | no | 22,23 [0.875] | 12,7 [0.500] | no | unassembled |
| RV4LAYSD502A | 5 k | 10 | 4 | 4 | 274 | 312 | S-4 | 312 | 1-6 [7-42] | 12 [1.4] | no | 22,23 [0.875] | 12,7 [0.500] | no | unassembled |
| RV4LAYSD504A | 500 k | 10 | 10 | 10 | 274 | 312 | S-4 | 312 | 1-6 [7-42] | 12 [1.4] | no | 22,23 [0.875] | 12,7 [0.500] | no | unassembled |

### Dimensional Drawings (For reference only: mm [in].)

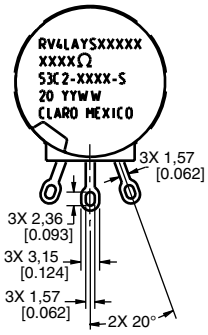


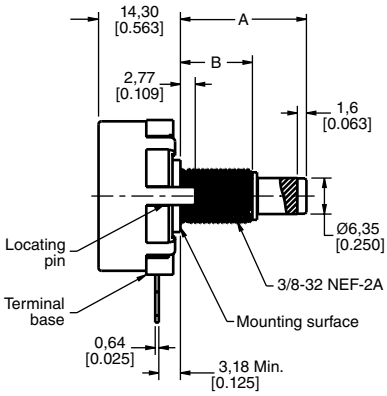


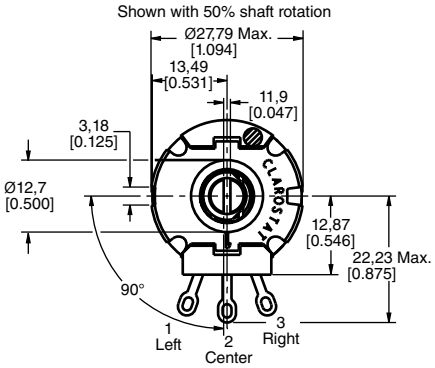

# RV4 Series Order Guides

**Table RV4-B Order Guide**

| Catalog Listing | Electrical | | | | | | | Mechanical | | | | Dimensions | | RoHS Compliant | Mounting Hardware |
|---|---|---|---|---|---|---|---|---|---|---|---|---|---|---|---|
| | Resistance (Ohm) | Resistance Tolerance (±%) | End Resistance at CW, Max. (Ohm) | End Resistance at CCW, Max. (Ohm) | Effective Electrical Rotation, Typ. (Degree) | Electrical Rotation, ±3 (Degree) | Taper | Mechanical Rotation (Degree) | Operating Torque (mN m [in-oz]) | Stop Torque (N m [in-lb]) | Shaft Seal | A<br>Shaft Length (mm [in]) | B<br>Bushing Length (mm [in]) | | |
| RV4NAYSB101A | 100 | 10 | 4 | 4 | 274 | 312 | S-4 | 312 | 1-6 [7-42] | 12 [1.4] | yes | 12,7 [0.500] | 9,53 [0.375] | no | unassembled |
| RV4NAYSB103A | 10 k | 10 | 4 | 4 | 274 | 312 | S-4 | 312 | 1-6 [7-42] | 12 [1.4] | yes | 12,7 [0.500] | 9,53 [0.375] | no | unassembled |
| RV4NAYSB503A | 50 k | 10 | 4 | 4 | 274 | 312 | S-4 | 312 | 1-6 [7-42] | 12 [1.4] | yes | 12,7 [0.500] | 9,53 [0.375] | no | unassembled |
| RV4NAYSK103A | 10 k | 10 | 4 | 4 | 274 | 312 | S-4 | 312 | 1-6 [7-42] | 12 [1.4] | yes | 63,5 [2.500] | 9,53 [0.375] | no | unassembled |
| RV4NAYSK502A | 5 k | 10 | 4 | 4 | 274 | 312 | S-4 | 312 | 1-6 [7-42] | 12 [1.4] | yes | 63.5 [2.5,0] | 9,53 [0.375] | no | unassembled |
| RV4SAYSD502A | 5 | 10 | - | - | 274 | 312 | S-4 | 312 | 1-6 [7-42] | 12 [1.4] | yes | 22,23 [0.875] | 9,53 [0.375] | no | unassembled |
| RV4NAYSD503D | 50 k | 20 | 500 | 4 | 274 | 312 | Z | 312 | 1-6 [7-42] | 12 [1.4] | yes | 22,23 [0.875] | 9,53 [0.375] | no | unassembled |

**Dimensional Drawings (For reference only: mm [in].)**

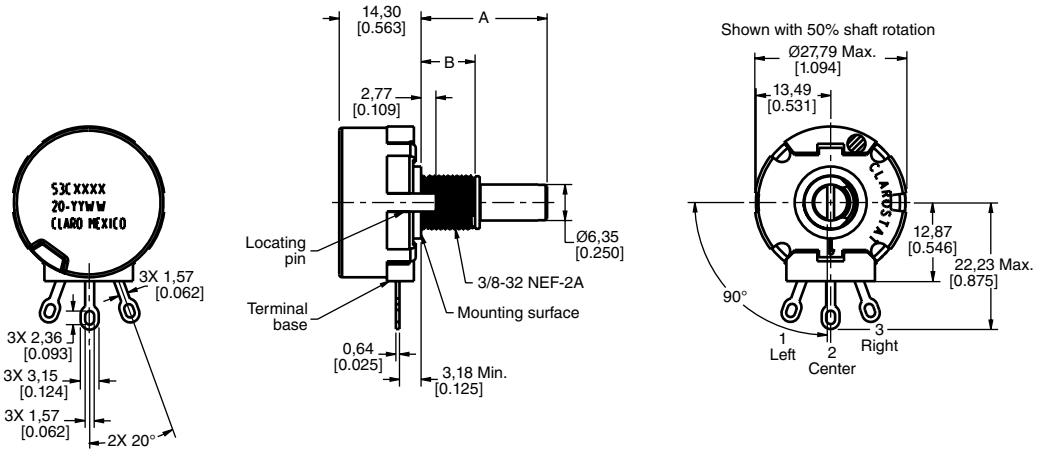

# 485 Series Specific Configurations

**Table 7. 485 Series Specific Configurations**

| Shaft Type | Bushing Type | AR Pin | Termin-ation | Configuration with Associated Hardware |
|---|---|---|---|---|
| **485-A (See Table 485-A on p. 22)** | | | | |
| flatted | standard, 9,53 mm [0.375 in] | 1 | solder lug | 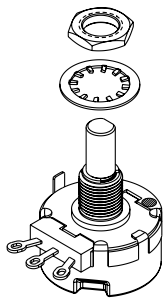 |
| **485-B (See Table 485-B on p. 22.)** | | | | |
| flatted | standard, 9,53 mm [0.375 in] | 1 | solder lug with center tap | 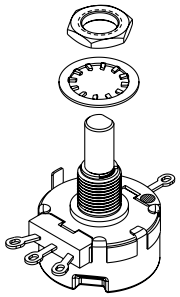 |
| **485-C (See Table 485-C on p. 23.)** | | | | |
| round | standard, 6,35 mm [0.250 in] | 1 | solder lug with center tap | 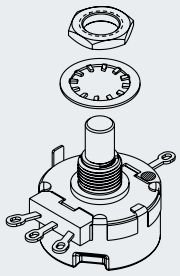 |
| **485-D (See Table 485-D on p. 23.)** | | | | |
| round | standard, 9,53 mm [0.375 in] | 1 | solder lug | 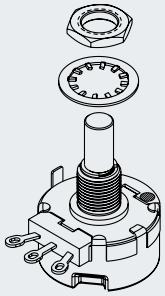 |
| **485-E (See Table 485-E on p. 24.)** | | | | |
| round | standard, 9,53 mm [0.375 in] | 1 | solder lug | 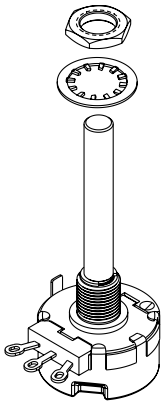 |
| **485-F (See Table 485-F on p. 24.)** | | | | |
| round | standard, 9,53 mm [0.375 in] | 1 | solder lug | 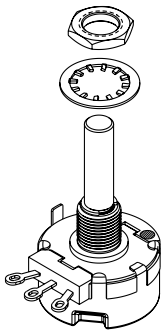 |
| **485-G (See Table 485-G on p. 25.)** | | | | |
| round | standard, 9,53 mm [0.375 in] | 1 | solder lug | 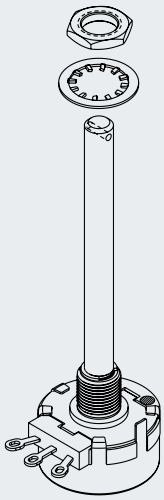 |
| **485-H (See Table 485-H on p. 25.)** | | | | |
| slotted | standard, 9,53 mm [0.375 in] | 1 | solder lug with center tap | 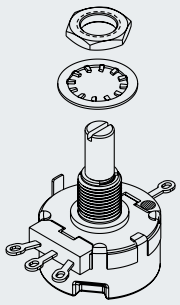 |

# 485 Series Specific Configurations

**Table 7. 485 Series Specific Configurations (continued)**

| Shaft Type | Bushing Type | AR Pin | Termin-ation | Configuration with Associated Hardware |
|---|---|---|---|---|
| **485-I (See Table 485-I on p. 26.)** | | | | |
| slotted | standard, 6,35 mm [0.250 in] and 9,53 mm [0.375 in] | 1 | solder lug | 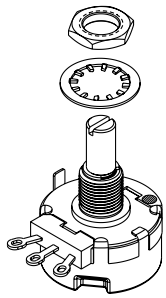 |
| **485-J (See Table 485-J on p. 26.)** | | | | |
| slotted | standard, 8,69 mm [0.342 in] | 0 | solder lug | 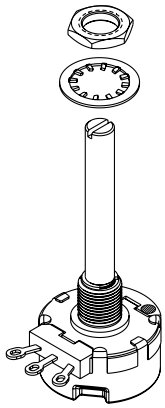 |
| **485-K (See Table 485-K on p. 27.)** | | | | |
| slotted | standard, 9,53 mm [0.375 in] | 1 | solder lug | 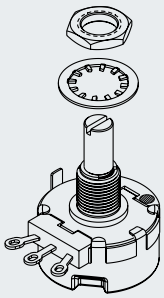 |
| **485-L (See Table 485-L on p. 27.)** | | | | |
| slotted | standard, 9,53 mm [0.375 in] | 1 | solder lug | 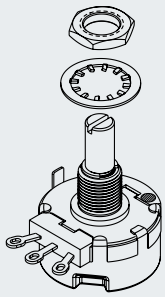 |
| **485-M (See Table 485-M on p. 28.)** | | | | |
| slotted | standard, 7,9 mm [0.312 in] | 1 | solder lug | 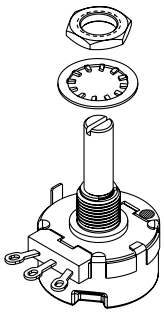 |
| **485-N (See Table 485-N on p. 28.)** | | | | |
| slotted | standard, 9,53 mm [0.375 in] and 12,7 mm [0.500 in] | 1 | solder lug | 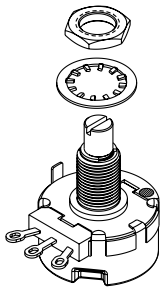 |
| **485-O (See Table 485-O on p. 29.)** | | | | |
| slotted | standard, 12,7 mm [0.500 in] | 1 | solder lug | 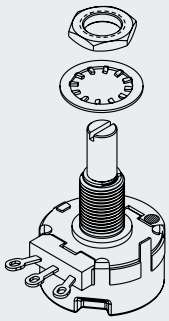 |
| **485-P (See Table 485-P on p. 29.)** | | | | |
| slotted | standard, 9,53 mm [0.375 in] | 1 | solder lug | 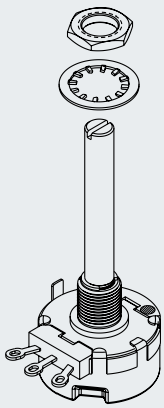 |

# 485 Series Specific Configurations

**Table 7. 485 Series Specific Configurations (continued)**

| Shaft Type | Bushing Type | AR Pin | Termin-ation | Configuration with Associated Hardware | Shaft Type | Bushing Type | AR Pin | Termin-ation | Configuration with Associated Hardware |
|---|---|---|---|---|---|---|---|---|---|
| **485-Q (See Table 485-Q on p. 30.)** | | | | | **485-R (See Table 485-R on p. 30.)** | | | | |
| slotted | standard, 9,53 mm [0.375 in] | 1 | solder lug with center tap | 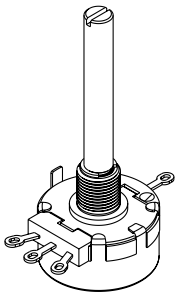 | round | standard, 9,53 mm [0.375 in] | 1 | solder lug | 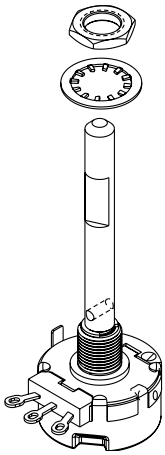 |
| **485-S (See Table 485-S on p. 31.)** | | | | | **485-T (See Table 485-T on p. 31)** | | | | |
| slotted | standard, 12,7 mm [0.500 in] | 1 | solder lug | 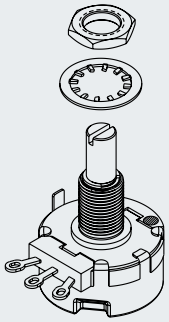 | straight knurled | standard, 8,67 mm [0.342 in] | 1 | solder lug | 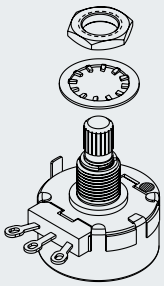 |

# 485 Series Order Guides

### Table 485-A Order Guide

| Catalog Listing | Electrical | | | | | | | Mechanical | | | | Dimensions | | | | RoHS Compliant | Mounting Hardware |
|---|---|---|---|---|---|---|---|---|---|---|---|---|---|---|---|---|---|
| | Resistance (Ohm) | Resistance Tolerance (±%) | End Resistance at CW, Max. (Ohm) | End Resistance at CCW, Max. (Ohm) | Effective Electrical Rotation, Typ. (Degree) | Electrical Rotation, ±3 (Degree) | Taper | Mechanical Rotation (Degree) | Operating Torque (mN m [in-oz]) | Stop Torque (N m [in-lb]) | Shaft Seal | A Flat Length (mm [in]) | B Flat Thickness (mm [in]) | C Shaft Length (mm [in]) | D Bushing Length (mm [in]) | | |
| 485000M8990 | 5 k | 10 | 4 | 4 | 112 | 312 | S-7 | 312 | 1-4 [7-28] | 12 [1-4] | no | 11,13 [0.438] | 5,54 [0.218] | 22,23 [0.875] | 9,53 [0.375] | yes | unassembled |

**Dimensional Drawings (For reference only: mm [in].)**

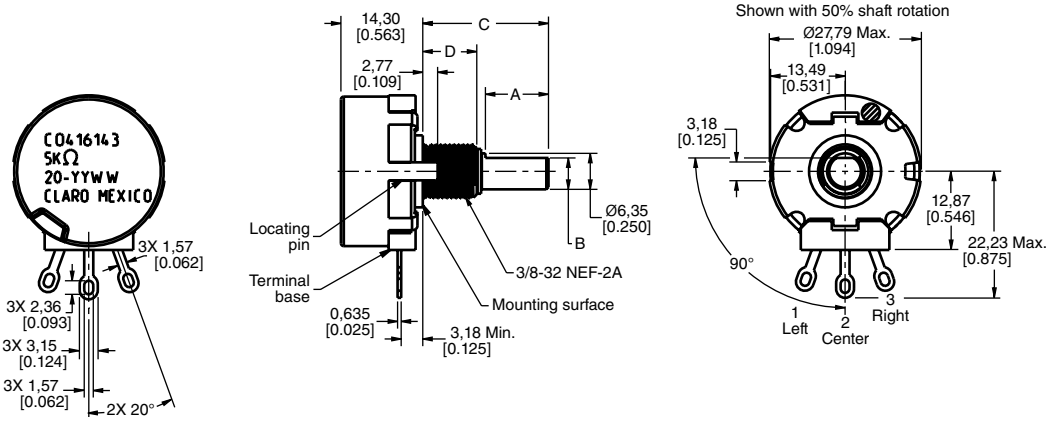


### Table 485-B Order Guide

| Catalog Listing | Electrical | | | | | | | Mechanical | | | | Dimensions | | | | RoHS Compliant | Mounting Hardware |
|---|---|---|---|---|---|---|---|---|---|---|---|---|---|---|---|---|---|
| | Resistance (Ohm) | Resistance Tolerance (±%) | End Resistance at CW, Max. (Ohm) | End Resistance at CCW, Max. (Ohm) | Effective Electrical Rotation, Typ. (Degree) | Electrical Rotation, ±3 (Degree) | Taper | Mechanical Rotation (Degree) | Operating Torque (mN m [in-oz]) | Stop Torque (N m [in-lb]) | Shaft Seal | A Flat Length (mm [in]) | B Flat Thickness (mm [in]) | C Shaft Length (mm [in]) | D Bushing Length (mm [in]) | | |
| 485025M9052 | 10 k | 10 | 4 | 4 | 112 | 312 | S-9 | 312 | S-14 | 12 | no | 11,13 [0.438] | 5,54 [0.218] | 22,23 [0.875] | 9,53 [0.375] | yes | unassembled |

**Dimensional Drawings (For reference only: mm [in].)**

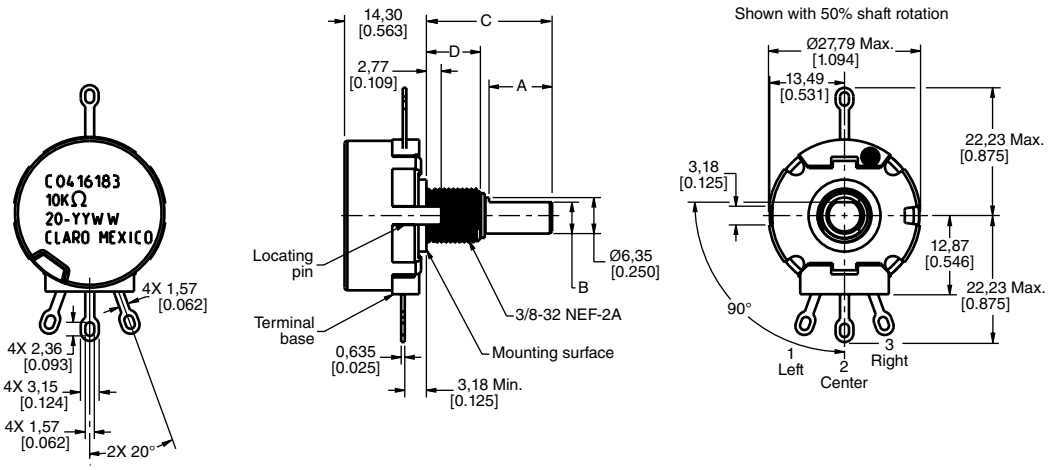

# 485 Series Order Guides

### Table 485-C Order Guide

| Catalog Listing | Electrical | | | | | | | Mechanical | | | | Dimensions | | RoHS Compliant | Mounting Hardware |
|---|---|---|---|---|---|---|---|---|---|---|---|---|---|---|---|
| | Resistance (Ohm) | Resistance Tolerance (±%) | End Resistance at CW, Max. (Ohm) | End Resistance at CCW, Max. (Ohm) | Effective Electrical Rotation, Typ. (Degree) | Electrical Rotation, ±3 (Degree) | Taper | Mechanical Rotation (Degree) | Operating Torque (mN m [in-oz]) | Stop Torque (N m [in-lb]) | Shaft Seal | A<br>Shaft Length (mm [in]) | B<br>Bushing Length (mm [in]) | | |
| 485025M8843 | 10 k | 10 | 4 | 4 | 112 | 312 | S-13 | 312 | 1-4 [7-28] | 12 [1.4] | no | 15,88 [0.625] | 6,35 [0.250] | yes | unassembled |
| 485025M9267 | 5 k | 10 | 4 | 4 | 112 | 312 | S-13 | 312 | 1-4 [7-28] | 12 [1.4] | no | 15,88 [0.625] | 6,35 [0.250] | yes | unassembled |

**Dimensional Drawings (For reference only: mm [in].)**

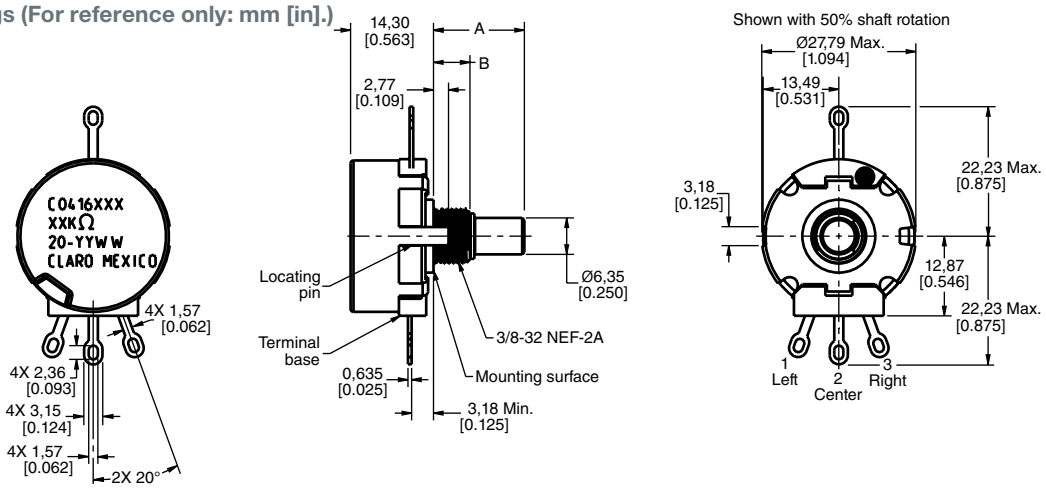


### Table 485-D Order Guide

| Catalog Listing | Electrical | | | | | | | Mechanical | | | | Dimensions | | RoHS Compliant | Mounting Hardware |
|---|---|---|---|---|---|---|---|---|---|---|---|---|---|---|---|
| | Resistance (Ohm) | Resistance Tolerance (±%) | End Resistance at CW, Max. (Ohm) | End Resistance at CCW, Max. (Ohm) | Effective Electrical Rotation, Typ. (Degree) | Electrical Rotation, ±3 (Degree) | Taper | Mechanical Rotation (Degree) | Operating Torque (mN m [in-oz]) | Stop Torque (N m [in-lb]) | Shaft Seal | A<br>Shaft Length (mm [in]) | B<br>Bushing Length (mm [in]) | | |
| 485008M7167 | 5 k | 10 | 4 | 4 | 284 | 312 | S-4 | 312 | 1-6 [7-42] | 12 [1.4] | yes | 22,23 [0.875] | 9,53 [0.375] | yes | unassembled |

**Dimensional Drawings (For reference only: mm [in].)**

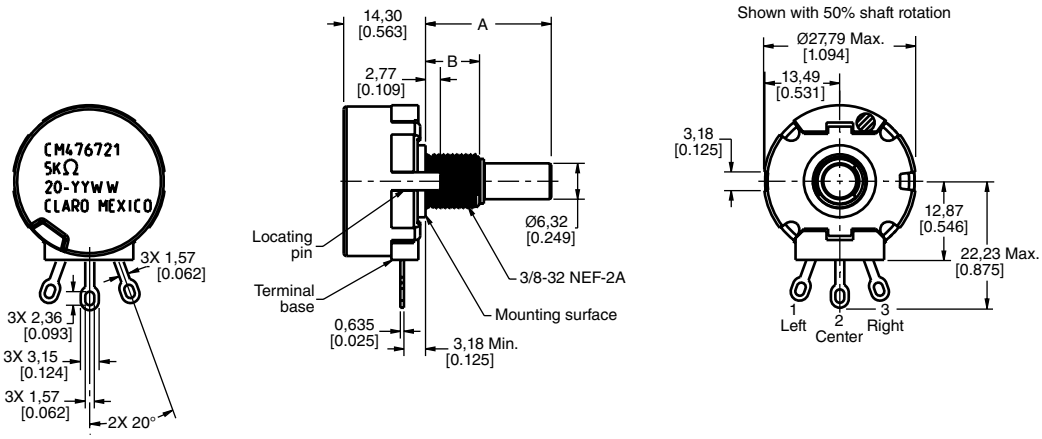

# 485 Series Order Guides

### Table 485-E Order Guide

| Catalog Listing | Electrical | | | | | | | Mechanical | | | | Dimensions | | RoHS Compliant | Mounting Hardware |
|---|---|---|---|---|---|---|---|---|---|---|---|---|---|---|---|
| | Resistance (Ohm) | Resistance Tolerance (±%) | End Resistance at CW, Max. (Ohm) | End Resistance at CCW, Max. (Ohm) | Effective Electrical Rotation, Typ. (Degree) | Electrical Rotation, ±3 (Degree) | Taper | Mechanical Rotation (Degree) | Operating Torque (mN m [in-oz]) | Stop Torque (N m [in-lb]) | Shaft Seal | A<br>Shaft Length (mm [in]) | B<br>Bushing Length (mm [in]) | | |
| 485000M8930 | 5 k | 10 | 4 | 4 | 284 | 312 | S-16 | 312 | 1-4 [7-28] | 12 [1.4] | no | 50,8 [2.000] | 9,53 [0.375] | yes | unassembled |

### Dimensional Drawings (For reference only: mm [in].)

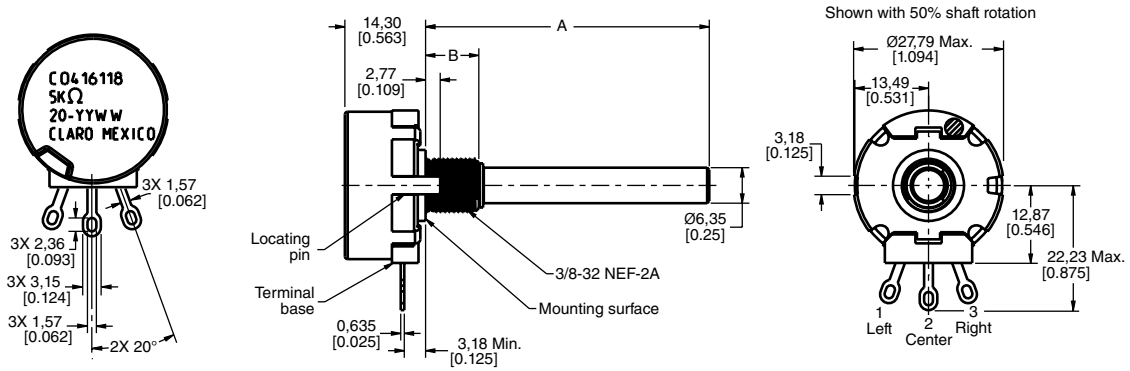


### Table 485-F Order Guide

| Catalog Listing | Electrical | | | | | | | Mechanical | | | | Dimensions | | RoHS Compliant | Mounting Hardware |
|---|---|---|---|---|---|---|---|---|---|---|---|---|---|---|---|
| | Resistance (Ohm) | Resistance Tolerance (±%) | End Resistance at CW, Max. (Ohm) | End Resistance at CCW, Max. (Ohm) | Effective Electrical Rotation, Typ. (Degree) | Electrical Rotation, ±3 (Degree) | Taper | Mechanical Rotation (Degree) | Operating Torque (mN m [in-oz]) | Stop Torque (N m [in-lb]) | Shaft Seal | A<br>Shaft Length (mm [in]) | B<br>Bushing Length (mm [in]) | | |
| 485000M9156 | 10 k | 10 | 4 | 100 | 284 | 312 | S-11 | 312 | 1-4 [7-28] | 12 [1.4] | no | 31,75 [1.250] | 9,53 [0.375] | yes | unassembled |

### Dimensional Drawings (For reference only: mm [in].)

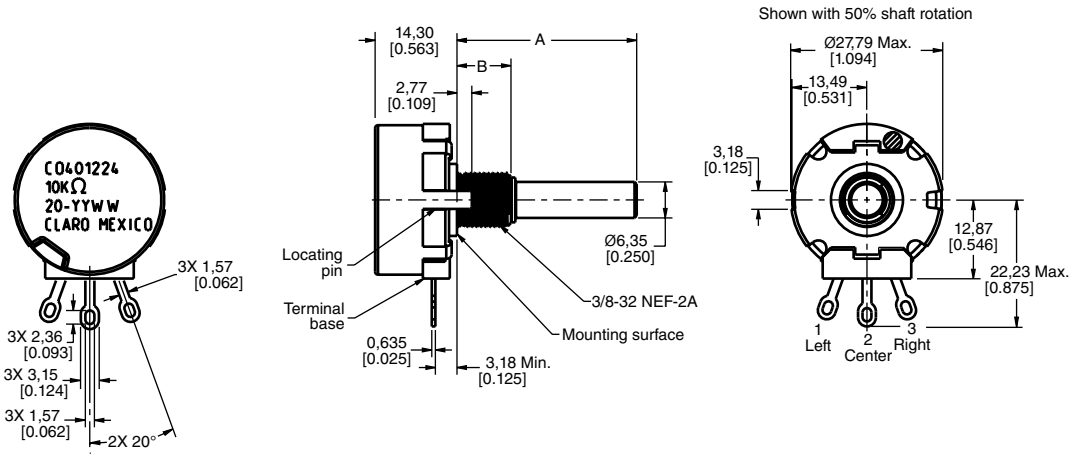

# 485 Series Order Guides

### Table 485-G Order Guide

| 8.5 | Electrical | | | | | | | Mechanical | | | | Dimensions | | RoHS Compliant | Mounting Hardware |
|---|---|---|---|---|---|---|---|---|---|---|---|---|---|---|---|
| | Resistance (Ohm) | Resistance Tolerance (±%) | End Resistance at CW, Max. (Ohm) | End Resistance at CCW, Max. (Ohm) | Effective Electrical Rotation, Typ. (Degree) | Electrical Rotation, ±3 (Degree) | Taper | Mechanical Rotation (Degree) | Operating Torque (mN m [in-oz]) | Stop Torque (N m [in-lb]) | Shaft Seal | A<br>Shaft Length (mm [in]) | B<br>Bushing Length (mm [in]) | | |
| 485004M8986 | 25 k | 10 | 4 | 4 | 180 | 348 | S-6 | 360 | 1-4 [7-28] | - | no | 76,2 [3.000] | 9,53 [0.375] | yes | unassembled |

### Dimensional Drawings (For reference only: mm [in].)

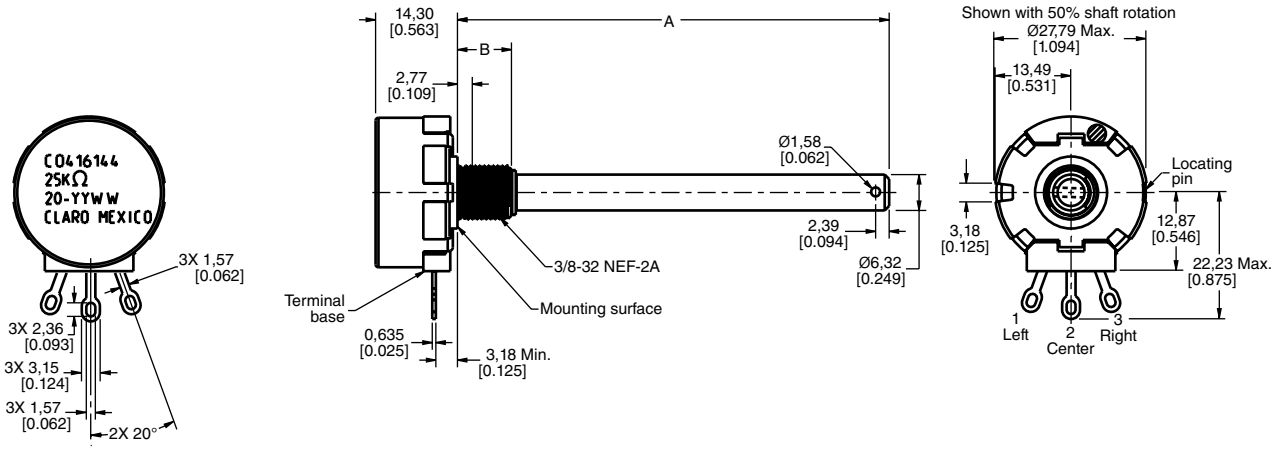


### Table 485-H Order Guide

| Catalog Listing | Electrical | | | | | | | Mechanical | | | | Dimensions | | | | RoHS Compliant | Mounting Hardware |
|---|---|---|---|---|---|---|---|---|---|---|---|---|---|---|---|---|---|
| | Resistance (Ohm) | Resistance Tolerance (±%) | End Resistance at CW, Max. (Ohm) | End Resistance at CCW, Max. (Ohm) | Effective Electrical Rotation, Typ. (Degree) | Electrical Rotation, ±3 (Degree) | Taper | Mechanical Rotation (Degree) | Operating Torque (mN m [in-oz]) | Stop Torque (N m [in-lb]) | Shaft Seal | A<br>Slot Length (mm [in]) | B<br>Slot Width (mm [in]) | C<br>Shaft Length (mm [in]) | D<br>Bushing Length (mm [in]) | | |
| 485025M9428 | 10 k | 10 | 4 | 4 | 263 | 312 | S-8 | 312 | 1-6 [7-42] | 12 [1.4] | no | 1,60 [0.063] | 1,19 [0.047] | 22,23 [0.875] | 9,53 [0.375] | yes | unassembled |
| 485042M9576 | 1 k | 10 | 4 | 4 | 263 | 312 | S-8 | 312 | 1-6 [7-42] | 12 [1.4] | no | 1,60 [0.063] | 1,19 [0.047] | 22,23 [0.875] | 9,53 [0.375] | yes | unassembled |

### Dimensional Drawings (For reference only: mm [in].)

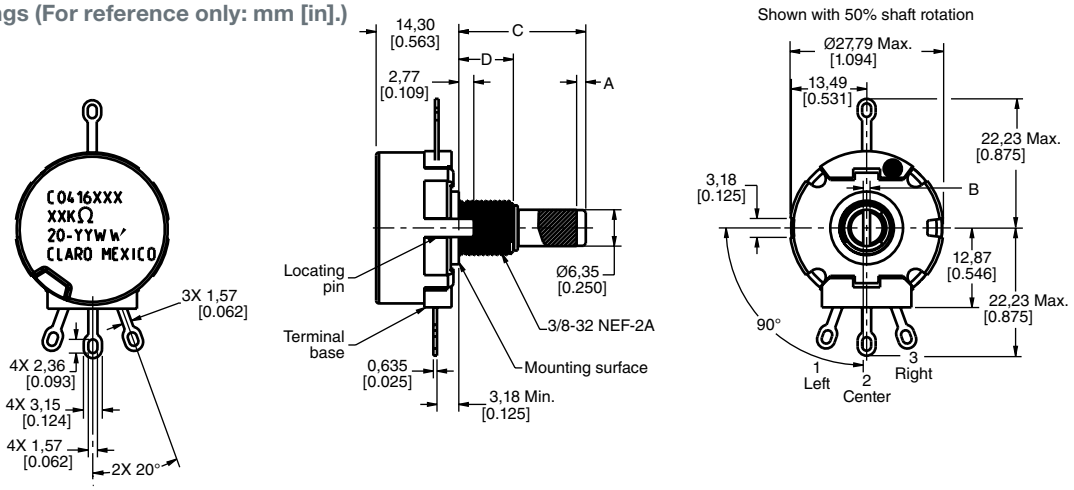

# 485 Series Order Guides

### Table 485-I Order Guide

| Catalog Listing | Electrical | | | | | | | Mechanical | | | | Dimensions | | | | RoHS Compliant | Mounting Hardware |
|---|---|---|---|---|---|---|---|---|---|---|---|---|---|---|---|---|---|
| | Resistance (Ohm) | Resistance Tolerance (±%) | End Resistance at CW, Max. (Ohm) | End Resistance at CCW, Max. (Ohm) | Effective Electrical Rotation, Typ. (Degree) | Electrical Rotation, ±3 (Degree) | Taper | Mechanical Rotation (Degree) | Operating Torque (mN m [in-oz]) | Stop Torque (N m [in-lb]) | Shaft Seal | A<br>Slot Length (mm [in]) | B<br>Depth Width (mm [in]) | C<br>Shaft Length (mm [in]) | D<br>Bushing Length (mm [in]) | | |
| 485000M8723 | 5 k | 10 | 4 | 4 | 284 | 312 | S-9 | 312 | 1-4 [1-28] | 12 [1.4] | no | 1,60 [0.063] | 1,19 [0.047] | 22,23 [0.875] | 9,53 [0.375] | yes | unassembled |
| 485000M9564 | 50 k | 10 | 4 | 4 | 284 | 312 | S-9 | 312 | 1-4 [1-28] | 12 [1.4] | no | 1,60 [0.063] | 1,19 [0.047] | 22,23 [0.875] | 9,53 [0.75] | yes | unassembled |
| 485000M9641 | 10 k | 10 | 4 | 4 | 284 | 312 | S-9 | 312 | 1-4 [1-28] | 12 [1.4] | no | 1,60 [0.063] | 1,19 [0.047] | 22,23 [0.875] | 9,53 [0.375] | yes | unassembled |
| 485000M9708 | 1 k | 10 | 4 | 4 | 284 | 312 | S-9 | 312 | 1-4 [1-28] | 12 [1.4] | no | 1,60 [0.063] | 1,19 [0.047] | 15,88 [0.625] | 6,35 [0.250] | yes | unassembled |

### Dimensional Drawings (For reference only: mm [in].)

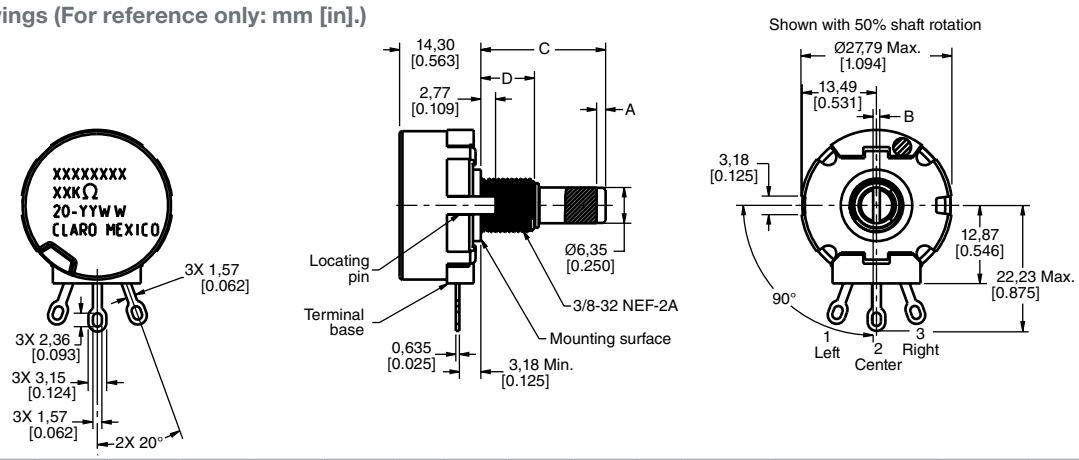


### Table 485-J Order Guide

| Catalog Listing | Electrical | | | | | | | Mechanical | | | | Dimensions | | | | RoHS Compliant | Mounting Hardware |
|---|---|---|---|---|---|---|---|---|---|---|---|---|---|---|---|---|---|
| | Resistance (Ohm) | Resistance Tolerance (±%) | End Resistance at CW, Max. (Ohm) | End Resistance at CCW, Max. (Ohm) | Effective Electrical Rotation, Typ. (Degree) | Electrical Rotation, ±3 (Degree) | Taper | Mechanical Rotation (Degree) | Operating Torque (mN m [in-oz]) | Stop Torque (N m [in-lb]) | Shaft Seal | A<br>Slot Depth (mm [in]) | B<br>Slot Width (mm [in]) | C<br>Shaft Length (mm [in]) | D<br>Bushing Length (mm [in]) | | |
| 485000M9017 | 1 M | 10 | 10 | 10 | 284 | 312 | S-4 | 312 | 1-4 [1-28] | 12 [1.4] | no | 1,60 [0.063] | 1,19 [0.047] | 50,8 [2.000] | 9,53 [0.375] | yes | unassembled |

### Dimensional Drawings (For reference only: mm [in].)

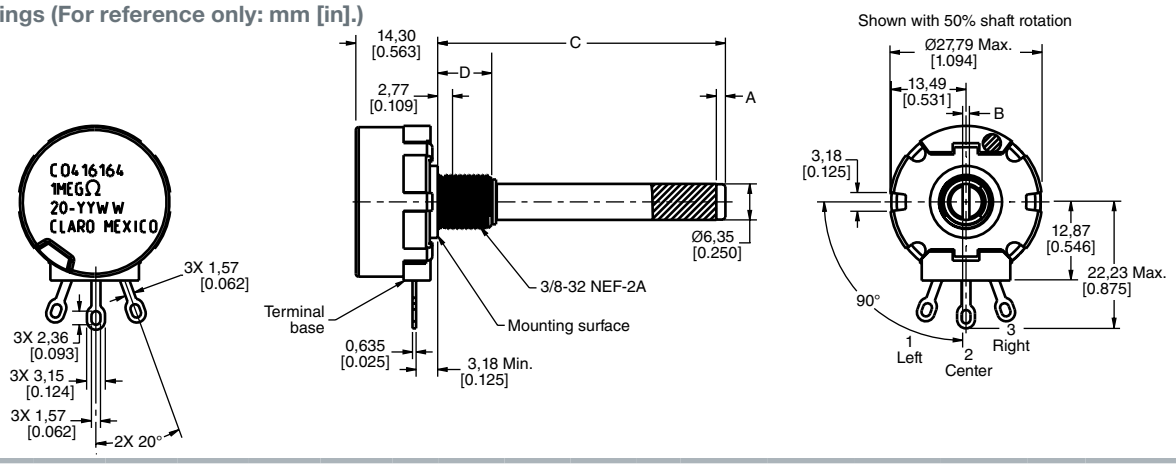

# 485 Series Order Guides

### Table 485-K Order Guide

| Catalog Listing | Electrical | | | | | | | Mechanical | | | | Dimensions | | | | RoHS Compliant | Mounting Hardware |
|---|---|---|---|---|---|---|---|---|---|---|---|---|---|---|---|---|---|
| | Resistance (Ohm) | Resistance Tolerance (±%) | End Resistance at CW, Max. (Ohm) | End Resistance at CCW, Max. (Ohm) | Effective Electrical Rotation, Typ. (Degree) | Electrical Rotation, ±3 (Degree) | Taper | Mechanical Rotation (Degree) | Operating Torque (mN m [in-oz]) | Stop Torque (N m [in-lb]) | Shaft Seal | A<br>Slot Depth (mm [in]) | B<br>Slot Width (mm [in]) | C<br>Shaft Length (mm [in]) | D<br>Bushing Length (mm [in]) | | |
| 485042M9668 | 10 k | 10 | 4 | 100 | 284 | 311 | S-7 | 312 | 1-6 [7-42] | 12 [1.4] | yes | 1,60 [0.063] | 1,19 [0.047] | 22,23 [0.875] | 9,53 [0.375] | yes | unassembled |

**Dimensional Drawings (For reference only: mm [in].)**

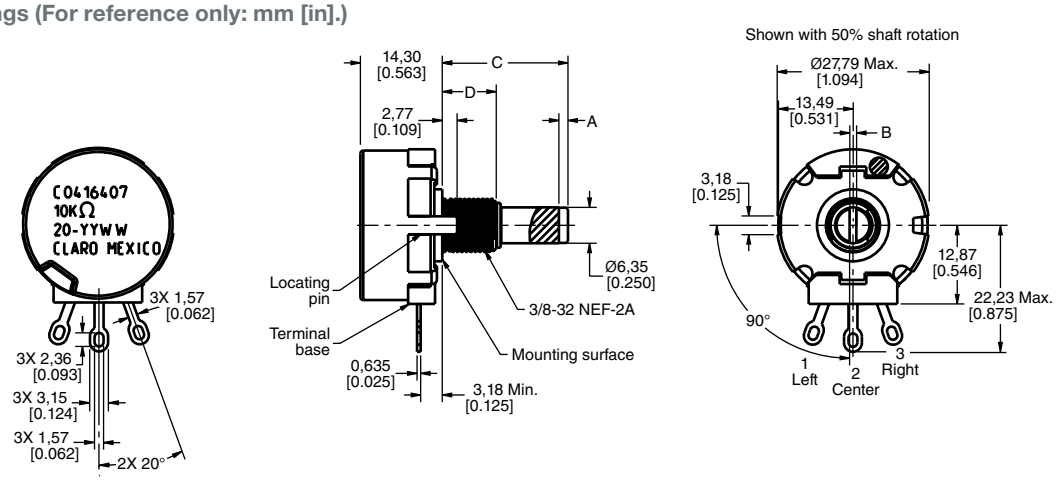


### Table 485-L Order Guide

| Catalog Listing | Electrical | | | | | | | Mechanical | | | | Dimensions | | | | RoHS Compliant | Mounting Hardware |
|---|---|---|---|---|---|---|---|---|---|---|---|---|---|---|---|---|---|
| | Resistance (Ohm) | Resistance Tolerance (±%) | End Resistance at CW, Max. (Ohm) | End Resistance at CCW, Max. (Ohm) | Effective Electrical Rotation, Typ. (Degree) | Electrical Rotation, ±3 (Degree) | Taper | Mechanical Rotation (Degree) | Operating Torque (mN m [in-oz]) | Stop Torque (N m [in-lb]) | Shaft Seal | A<br>Slot Depth (mm [in]) | B<br>Slot Width (mm [in]) | C<br>Shaft Length (mm [in]) | D<br>Bushing Length (mm [in]) | | |
| 485000M8911 | 1 M | 10 | 10 | 10 | 304 | 312 | S-2 | 312 | 1-4 [7-28] | 12 [1.4] | no | 1,60 [0.063] | 1,19 [0.047] | 22,23 [0.875] | 9,53 [0.375] | yes | unassembled |

**Dimensional Drawings (For reference only: mm [in].)**

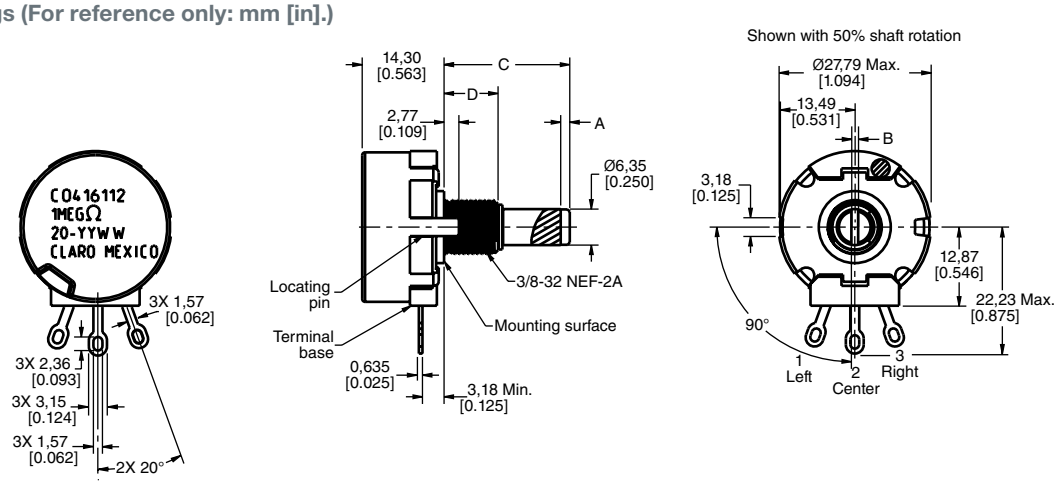

# 485 Series Order Guides

### Table 485-M Order Guide

| Catalog Listing | Electrical | | | | | | | Mechanical | | | | Dimensions | | | | RoHS Compliant | Mounting Hardware |
|---|---|---|---|---|---|---|---|---|---|---|---|---|---|---|---|---|---|
| | Resistance (Ohm) | Resistance Tolerance (±%) | End Resistance at CW, Max. (Ohm) | End Resistance at CCW, Max. (Ohm) | Effective Electrical Rotation, Typ. (Degree) | Electrical Rotation, ±3 (Degree) | Taper | Mechanical Rotation (Degree) | Operating Torque (mN m [in-oz]) | Stop Torque (N m [in-lb]) | Shaft Seal | A<br>Slot Depth (mm [in]) | B<br>Slot Width (mm [in]) | C<br>Shaft Length (mm [in]) | D<br>Bushing Length (mm [in]) | | |
| 485010M6860 | 5 k | 10 | 4 | 4 | 33 | 312 | S-9 | 312 | 1-4 [7-28] | 12 [1.4] | no | 1,60 [0.063] | 1,19 [0.047] | 27,19 [1.031] | 7,92 [0.312] | yes | unassembled |

**Dimensional Drawings (For reference only: mm [in].)**

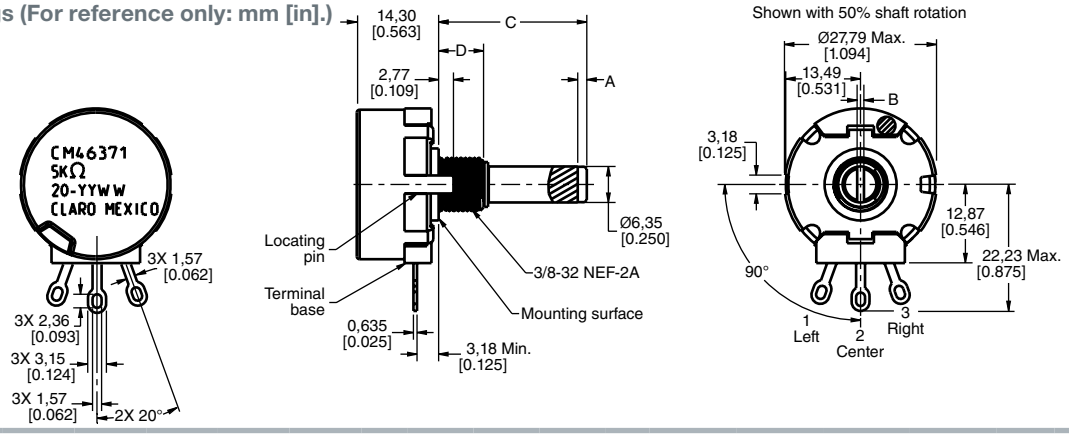


### Table 485-N Order Guide

| Catalog Listing | Electrical | | | | | | | Mechanical | | | | Dimensions | | | | RoHS Compliant | Mounting Hardware |
|---|---|---|---|---|---|---|---|---|---|---|---|---|---|---|---|---|---|
| | Resistance (Ohm) | Resistance Tolerance (±%) | End Resistance at CW, Max. (Ohm) | End Resistance at CCW, Max. (Ohm) | Effective Electrical Rotation, Typ. (Degree) | Electrical Rotation, ±3 (Degree) | Taper | Mechanical Rotation (Degree) | Operating Torque (mN m [in-oz]) | Stop Torque (N m [in-lb]) | Shaft Seal | A<br>Slot Depth (mm [in]) | B<br>Slot Width (mm [in]) | C<br>Shaft Length (mm [in]) | D<br>Bushing Length (mm [in]) | | |
| 485000M8990 | 5 k | 10 | 4 | 4 | 45 | 312 | S-10 | 312 | 1-6 [7-42] | 12 [1.4] | yes | 1,60 [0.063] | 1,19 [0.047] | 20,62 [0.182] | 12,7 [0.500] | yes | unassembled |
| 485008M0002 | 5 k | 10 | 4 | 4 | 45 | 312 | S-10 | 312 | 1-6 [7-42] | 12 [1.4] | yes | 1,60 [0.063] | 1,19 [0.047] | 50,8 [2.000] | 12,7 [0.500] | no | unassembled |
| 485008M8967 | 5 k | 10 | 4 | 4 | 45 | 312 | S-10 | 312 | 1-6 [7-42] | 12 [1.4] | yes | 1,60 [0.063] | 1,19 [0.047] | 50,8 [2.000] | 12,7 [0.500] | yes | unassembled |
| 485008M9458 | 5 k | 10 | 4 | 4 | 45 | 312 | S-10 | 312 | 1-6 [7-42] | 12 [1.4] | yes | 1,60 [0.063] | 1,19 [0.047] | 50,8 [2.000] | 9,53 [0.375] | yes | unassembled |
| 485008M9687 | 5 k | 10 | 4 | 4 | 45 | 312 | S-10 | 312 | 1-6 [7-42] | 12 [1.4] | yes | 1,60 [0.063] | 1,19 [0.047] | 47,63 [1.875] | 9,53 [0.375] | yes | unassembled |
| 485008M9688 | 5 k | 10 | 4 | 4 | 45 | 312 | S-A | 312 | 1-6 [7-42] | 12 [1.4] | yes | 1,60 [0.063] | 1,19 [0.047] | 39,88 [1.570] | 12,7 [0.500] | yes | unassembled |

**Dimensional Drawings (For reference only: mm [in].)**

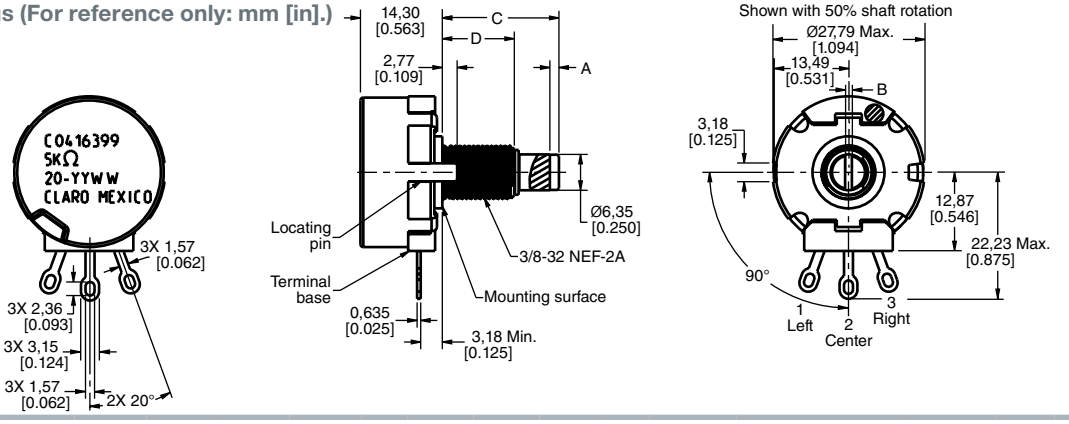

# 485 Series Order Guides

### Table 485-O Order Guide

| Catalog Listing | Electrical | | | | | | | Mechanical | | | | Dimensions | | | | RoHS Compliant | Mounting Hardware |
|---|---|---|---|---|---|---|---|---|---|---|---|---|---|---|---|---|---|
| | Resistance (Ohm) | Resistance Tolerance (±%) | End Resistance at CW, Max. (Ohm) | End Resistance at CCW, Max. (Ohm) | Effective Electrical Rotation, Typ. (Degree) | Electrical Rotation, ±3 (Degree) | Taper | Mechanical Rotation (Degree) | Operating Torque (mN m [in-oz]) | Stop Torque (N m [in-lb]) | Shaft Seal | A<br>Slot Depth (mm [in]) | B<br>Slot Width (mm [in]) | C<br>Shaft Length (mm [in]) | D<br>Bushing Length (mm [in]) | | |
| 485008M0004 | 5 k | 10 | 4 | 4 | 45 | 312 | S-10 | 312 | 1-6 [7-42] | 12 [1.4] | yes | 1,60 [0.063] | 1,19 [0.047] | 25,4 [1.000] | 12,7 [0.500] | no | unassembled |

### Dimensional Drawings (For reference only: mm [in].)

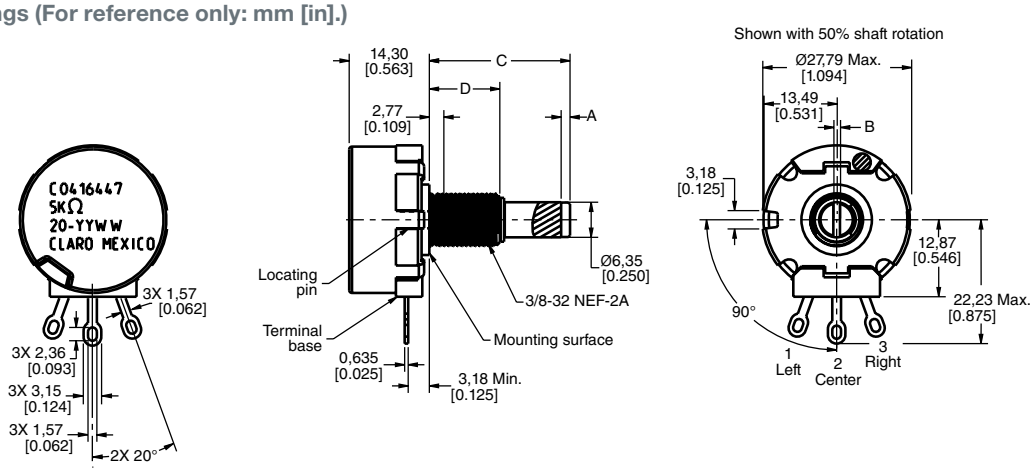


### Table 485-P Order Guide

| Catalog Listing | Electrical | | | | | | | Mechanical | | | | Dimensions | | | | RoHS Compliant | Mounting Hardware |
|---|---|---|---|---|---|---|---|---|---|---|---|---|---|---|---|---|---|
| | Resistance (Ohm) | Resistance Tolerance (±%) | End Resistance at CW, Max. (Ohm) | End Resistance at CCW, Max. (Ohm) | Effective Electrical Rotation, Typ. (Degree) | Electrical Rotation, ±3 (Degree) | Taper | Mechanical Rotation (Degree) | Operating Torque (mN m [in-oz]) | Stop Torque (N m [in-lb]) | Shaft Seal | A<br>Slot Depth (mm [in]) | B<br>Slot Width (mm [in]) | C<br>Shaft Length (mm [in]) | D<br>Bushing Length (mm [in]) | | |
| 485000M9651 | 20 k | 10 | 4 | 4 | 46 | 312 | S-10 | 312 | 1-4 [7-28] | 12 [1.4] | no | 1,60 [0.063] | 1,19 [0.047] | 50,8 [2.000] | 9,53 [0.375] | yes | unassembled |

### Dimensional Drawings (For reference only: mm [in].)

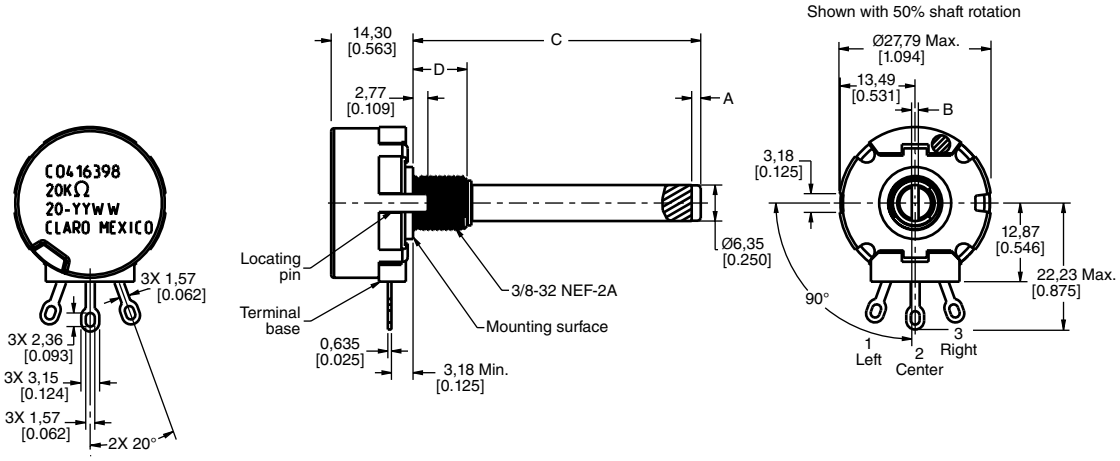

# 485 Series Order Guides

### Table 485-Q Order Guide

| Catalog Listing | Electrical | | | | | | | Mechanical | | | | Dimensions | | | | RoHS Compliant | Mounting Hardware |
|---|---|---|---|---|---|---|---|---|---|---|---|---|---|---|---|---|---|
| | Resistance (Ohm) | Resistance Tolerance (±%) | End Resistance at CW, Max. (Ohm) | End Resistance at CCW, Max. (Ohm) | Effective Electrical Rotation, Typ. (Degree) | Electrical Rotation, ±3 (Degree) | Taper | Mechanical Rotation (Degree) | Operating Torque (mN m [in-oz]) | Stop Torque (N m [in-lb]) | Shaft Seal | A<br>Slot Depth (mm [in]) | B<br>Slot Width (mm [in]) | C<br>Shaft Length (mm [in]) | D<br>Bushing Length (mm [in]) | | |
| 485030M9652 | 10 k | 10 | 4 | 4 | 270 | 348 | S-12 | 360 | 1-4 | - | no | 1,60 [0.063] | 1,19 [0.047] | 50,8 [2.000] | 9,53 [0.375] | yes | unassembled |

### Dimensional Drawings (For reference only: mm [in].)

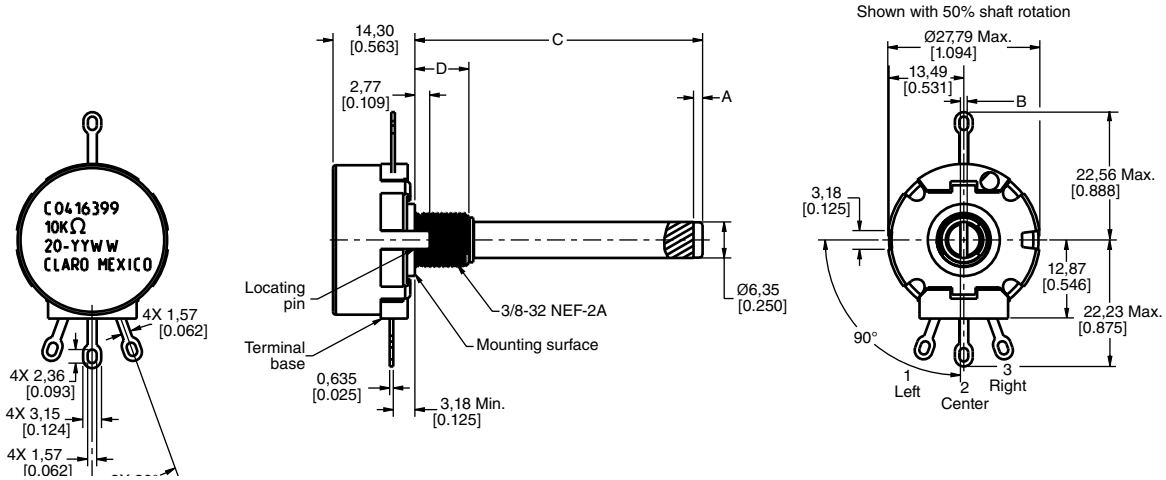


### Table 485-R Series Order Guide

| Catalog Listing | Electrical | | | | | | | Mechanical | | | | Dimensions | | RoHS Compliant | Mounting Hardware |
|---|---|---|---|---|---|---|---|---|---|---|---|---|---|---|---|
| | Resistance (Ohm) | Resistance Tolerance (±%) | End Resistance at CW, Max. (Ohm) | End Resistance at CCW, Max. (Ohm) | Effective Electrical Rotation, Typ. (Degree) | Electrical Rotation, ±3 (Degree) | Taper | Mechanical Rotation (Degree) | Operating Torque (mN m [in-oz]) | Stop Torque (N m [in-lb]) | Shaft Seal | A<br>Shaft Length (mm [in]) | B<br>Bushing Length (mm [in]) | | |
| 485040M9512 | 1 k | 10 | 4 | 4 | 250 | 312 | S-5 | 312 | 1-4 | 12 | no | 63,5 [2.500] | 9,53 [0.375] | yes | unassembled |

### Dimensional Drawings (For reference only: mm [in].)

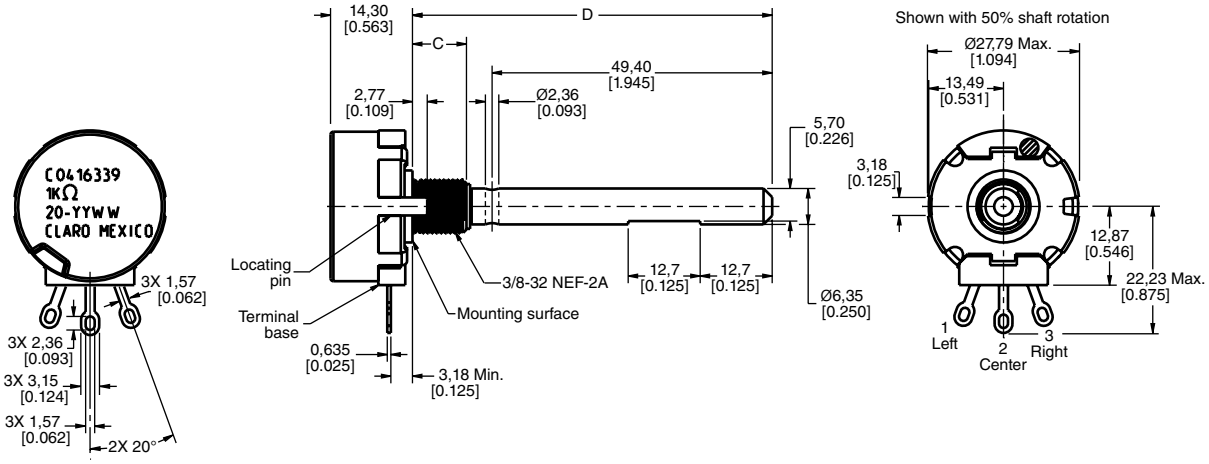

# 485 Series Order Guides

### Table 485-S Order Guide

| Catalog Listing | Electrical | | | | | | | Mechanical | | | | Dimensions | | | | RoHS Compliant | Mounting Hardware |
|---|---|---|---|---|---|---|---|---|---|---|---|---|---|---|---|---|---|
| | Resistance (Ohm) | Resistance Tolerance (±%) | End Resistance at CW, Max. (Ohm) | End Resistance at CCW, Max. (Ohm) | Effective Electrical Rotation, Typ. (Degree) | Electrical Rotation, ±3 (Degree) | Taper | Mechanical Rotation (Degree) | Operating Torque (mN m [in-oz]) | Stop Torque (N m [in-lb]) | Shaft Seal | A<br>Slot Depth (mm [in]) | B<br>Slot Width (mm [in]) | C<br>Shaft Length (mm [in]) | D<br>Bushing Length (mm [in]) | | |
| 485048M9728 | 5 k | 5 | 4 | 4 | 45 | 312 | S-15 | 312 | 1-6 | 12 | yes | 0,23 [0.009] | 1,19 [0.047] | 25,15 [0.990] | 12,7 [0.500] | no | unassembled |

### Dimensional Drawings (For reference only: mm [in].)

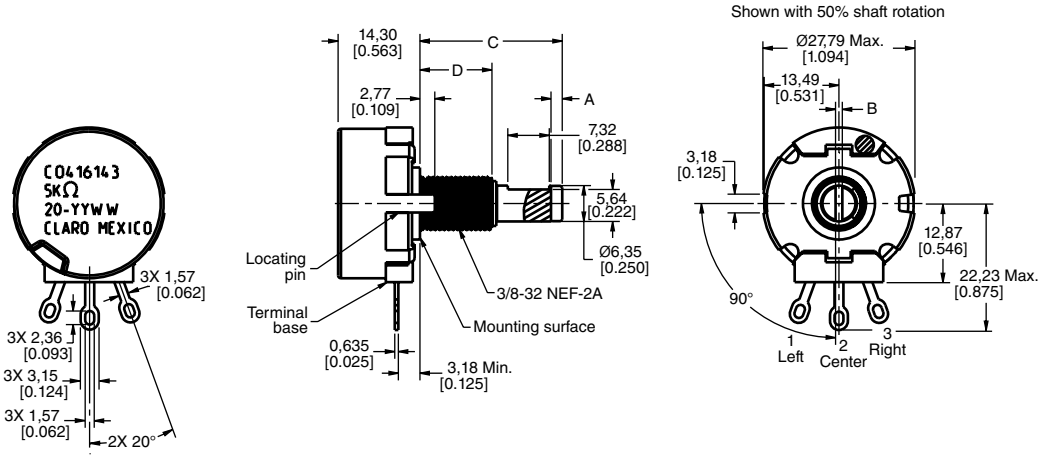


### Table 485-T Order Guide

| Catalog Listing | Electrical | | | | | | | Mechanical | | | | Dimensions | | RoHS Compliant | Mounting Hardware |
|---|---|---|---|---|---|---|---|---|---|---|---|---|---|---|---|
| | Resistance (Ohm) | Resistance Tolerance (±%) | End Resistance at CW, Max. (Ohm) | End Resistance at CCW, Max. (Ohm) | Effective Electrical Rotation, Typ. (Degree) | Electrical Rotation, ±3 (Degree) | Taper | Mechanical Rotation (Degree) | Operating Torque (mN m [in-oz]) | Stop Torque (N m [in-lb]) | Shaft Seal | A<br>Shaft Length (mm [in]) | B<br>Bushing Length (mm [in]) | | |
| 485022M8995 | 20 k | 10 | 4 | 4 | 158 | 348 | S-8 | 360 | 1-4 | - | no | 19,05 [0.750] | 8,69 [0.342] | yes | unassembled |

### Dimensional Drawings (For reference only: mm [in].)

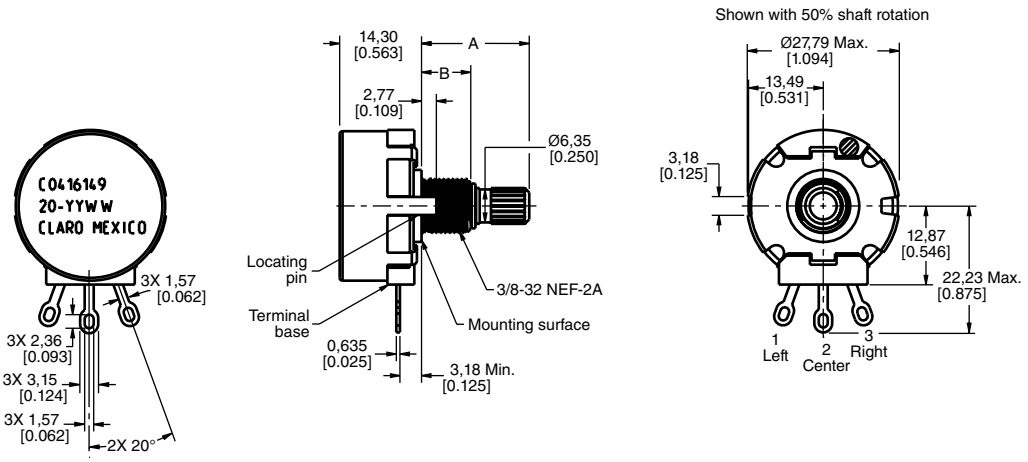

# 53C Series Specific Configurations

**Table 8. 53C Series Specific Configurations**

| Shaft Type | Bushing Type | AR Pin | Termin-ation | Configuration with Associated Hardware |
|---|---|---|---|---|
| **53C1 (See Table 53C1 on pp. 33-34.)** | | | | |
| round | standard, 9,53 mm [0.375 in] | 1 | solder lug | 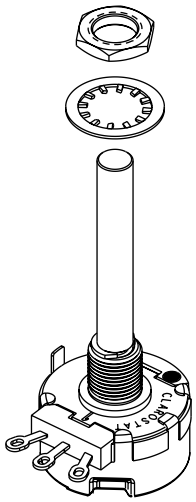 |
| **53C3 (See Table 53C3 on pp. 36-37.)** | | | | |
| slotted | standard, 6,35 mm [0.25 in] | 1 | solder lug | 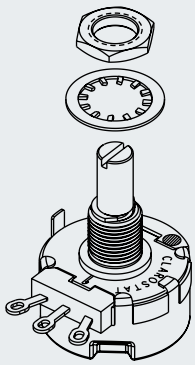 |

| Shaft Type | Bushing Type | AR Pin | Termin-ation | Configuration with Associated Hardware |
|---|---|---|---|---|
| **53C2 (See Table 53C2 on p. 35.)** | | | | |
| slotted | high torque, 12,7 mm [0.500 in] | 1 | solder lug | 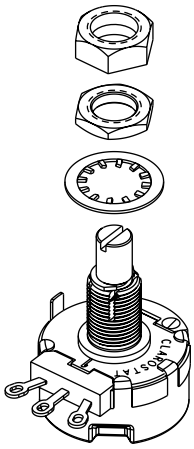 |

# 53C Series Order Guides

**Table 53C1 Order Guide**

| Catalog Listing | Electrical | | | | | | | Mechanical | | | | Dimensions | | RoHS Compliant | Mounting Hardware |
|---|---|---|---|---|---|---|---|---|---|---|---|---|---|---|---|
| | Resistance (Ohm) | Resistance Tolerance (±%) | End Resistance at CW, Max. (Ohm) | End Resistance at CCW, Max. (Ohm) | Effective Electrical Rotation, Typ. (Degree) | Electrical Rotation, ±3 (Degree) | Taper | Mechanical Rotation (Degree) | Operating Torque (mN m [in-oz]) | Stop Torque (N m [in-lb]) | Shaft Seal | A<br>Shaft Length (mm [in]) | B<br>Bushing Length (mm [in]) | | |
| 53C1100 | 100 | 10 | 4 | 4 | 274 | 312 | S-4 | 312 | 1-6 [7-42] | 12 [1.4] | no | 19,05 [2.00] | 9,53 [0.375] | yes | unassembled |
| 53C1100K | 100 k | 10 | 4 | 4 | 274 | 312 | S-4 | 312 | 1-6 [7-42] | 12 [1.4] | no | 19,05 [2.00] | 9,53 [0.375] | yes | unassembled |
| 53C110K | 10 k | 10 | 4 | 4 | 274 | 312 | S-4 | 312 | 1-6 [7-42] | 12 [1.4] | no | 19,05 [2.00] | 9,53 [0.375] | yes | unassembled |
| 53C110MEG | 10 M | 20 | 10 | 10 | 274 | 312 | S-4 | 312 | 1-6 [7-42] | 12 [1.4] | no | 19,05 [2.00] | 9,53 [0.375] | yes | unassembled |
| 53C11500 | 1.5 k | 10 | 4 | 4 | 274 | 312 | S-4 | 312 | 1-6 [7-42] | 12 [1.4] | no | 19,05 [2.00] | 9,53 [0.375] | yes | unassembled |
| 53C115K | 15 k | 10 | 4 | 4 | 274 | 312 | S-4 | 312 | 1-6 [7-42] | 12 [1.4] | no | 19,05 [2.00] | 9,53 [0.375] | yes | unassembled |
| 53C11K | 1 k | 10 | 4 | 4 | 274 | 312 | S-4 | 312 | 1-6 [7-42] | 12 [1.4] | no | 19,05 [2.00] | 9,53 [0.375] | yes | unassembled |
| 53C11MEG | 1 M | 20 | 10 | 10 | 274 | 312 | S-4 | 312 | 1-6 [7-42] | 12 [1.4] | no | 19,05 [2.00] | 9,53 [0.375] | yes | unassembled |
| 53C120K | 20 k | 10 | 4 | 4 | 274 | 312 | S-4 | 312 | 1-6 [7-42] | 12 [1.4] | no | 19,05 [2.00] | 9,53 [0.375] | yes | unassembled |
| 53C1250 | 250 | 10 | 4 | 4 | 274 | 312 | S-4 | 312 | 1-6 [7-42] | 12 [1.4] | no | 19,05 [2.00] | 9,53 [0.375] | yes | unassembled |
| 53C12500 | 2.5 k | 10 | 4 | 4 | 274 | 312 | S-4 | 312 | 1-6 [7-42] | 12 [1.4] | no | 19,05 [2.00] | 9,53 [0.375] | yes | unassembled |
| 53C1250K | 250 k | 10 | 10 | 10 | 274 | 312 | S-4 | 312 | 1-6 [7-42] | 12 [1.4] | no | 19,05 [2.00] | 9,53 [0.375] | yes | unassembled |
| 53C125K | 25 k | 10 | 4 | 4 | 274 | 312 | S-4 | 312 | 1-6 [7-42] | 12 [1.4] | no | 19,05 [2.00] | 9,53 [0.375] | yes | unassembled |
| 53C12K | 2 k | 10 | 4 | 4 | 274 | 312 | S-4 | 312 | 1-6 [7-42] | 12 [1.4] | no | 19,05 [2.00] | 9,53 [0.375] | yes | unassembled |
| 53C135K | 35 k | 10 | 4 | 4 | 274 | 312 | S-4 | 312 | 1-6 [7-42] | 12 [1.4] | no | 19,05 [2.00] | 9,53 [0.375] | yes | unassembled |
| 53C150 | 50 k | 10 | 4 | 4 | 274 | 312 | S-4 | 312 | 1-6 [7-42] | 12 [1.4] | no | 19,05 [2.00] | 9,53 [0.375] | yes | unassembled |
| 53C1500 | 500 | 10 | 4 | 4 | 274 | 312 | S-4 | 312 | 1-6 [7-42] | 12 [1.4] | no | 19,05 [2.00] | 9,53 [0.375] | yes | unassembled |
| 53C1500K | 500 k | 10 | 10 | 10 | 274 | 312 | S-4 | 312 | 1-6 [7-42] | 12 [1.4] | no | 19,05 [2.00] | 9,53 [0.375] | yes | unassembled |
| 53C150K | 50 k | 10 | 4 | 4 | 274 | 312 | S-4 | 312 | 1-6 [7-42] | 12 [1.4] | no | 19,05 [2.00] | 9,53 [0.375] | yes | unassembled |
| 53C15K | 5 k | 10 | 4 | 4 | 274 | 312 | S-4 | 312 | 1-6 [7-42] | 12 [1.4] | no | 19,05 [2.00] | 9,53 [0.375] | yes | unassembled |
| 53C15MEG | 5 M | 20 | 10 | 10 | 274 | 312 | S-4 | 312 | 1-6 [7-42] | 12 [1.4] | no | 19,05 [2.00] | 9,53 [0.375] | yes | unassembled |
| 53C1SW100K | 100 k | 10 | 4 | 4 | 274 | 312 | S-4 | 312 | 1-6 [7-42] | 12 [1.4] | no | 19,05 [2.00] | 9,53 [0.375] | yes | unassembled |
| 53C1SW10K | 10 k | 10 | 4 | 4 | 274 | 312 | S-4 | 312 | 1-6 [7-42] | 12 [1.4] | no | 19,05 [2.00] | 9,53 [0.375] | yes | unassembled |

(Continued on next page.)

# 53C Series Order Guide

**Table 53C1 Order Guide (continued)**

| Catalog Listing | Electrical | | | | | | | Mechanical | | | | Dimensions | | RoHS Compliant | Mounting Hardware |
|---|---|---|---|---|---|---|---|---|---|---|---|---|---|---|---|
| | Resistance (Ohm) | Resistance Tolerance (±%) | End Resistance at CW, Max. (Ohm) | End Resistance at CCW, Max. (Ohm) | Effective Electrical Rotation, Typ. (Degree) | Electrical Rotation, ±3 (Degree) | Taper | Mechanical Rotation (Degree) | Operating Torque (mN m [in-oz]) | Stop Torque (N m [in-lb]) | Shaft Seal | A<br>Shaft Length (mm [in]) | B<br>Bushing Length (mm [in]) | | |
| 53C1100KZ | 100 k | 10 | 1 k | 4 | 274 | 312 | Z | 312 | 1-6 [7-42] | 12 [1.4] | no | 50,8 [2.00] | 9,53 [0.375] | yes | unassembled |
| 53C110KZ | 10 k | 10 | 100 | 4 | 274 | 312 | Z | 312 | 1-6 [7-42] | 12 [1.4] | no | 50,8 [2.00] | 9,53 [0.375] | yes | unassembled |
| 53C11MEGZ | 1 M | 20 | 10 k | 10 | 274 | 312 | Z | 312 | 1-6 [7-42] | 12 [1.4] | no | 50,8 [2.00] | 9,53 [0.375] | yes | unassembled |
| 53C1250KZ | 250 k | 10 | 2.5 k | 10 | 274 | 312 | Z | 312 | 1-6 [7-42] | 12 [1.4] | no | 50,8 [2.00] | 9,53 [0.375] | yes | unassembled |
| 53C125KZ | 25 k | 10 | 250 | 4 | 274 | 312 | Z | 312 | 1-6 [7-42] | 12 [1.4] | no | 50,8 [2.00] | 9,53 [0.375] | yes | unassembled |
| 53C1500KZ | 500 k | 10 | 5 k | 10 | 274 | 312 | Z | 312 | 1-6 [7-42] | 12 [1.4] | no | 50,8 [2.00] | 9,53 [0.375] | yes | unassembled |
| 53C150KZ | 50 k | 10 | 500 | 4 | 274 | 312 | Z | 312 | 1-6 [7-42] | 12 [1.4] | no | 50,8 [2.00] | 9,53 [0.375] | yes | unassembled |
| 53C15KZ | 5 k | 10 | 50 | 4 | 274 | 312 | Z | 312 | 1-6 [7-42] | 12 [1.4] | no | 50,8 [2.00] | 9,53 [0.375] | yes | unassembled |
| 53C1-100K-RZ | 100 k | 10 | 1 k | 4 | 274 | 312 | RZ | 312 | 1-6 [7-42] | 12 [1.4] | no | 50,8 [2.00] | 9,53 [0.375] | yes | unassembled |

**Dimensional Drawings (For reference only: mm [in].)**

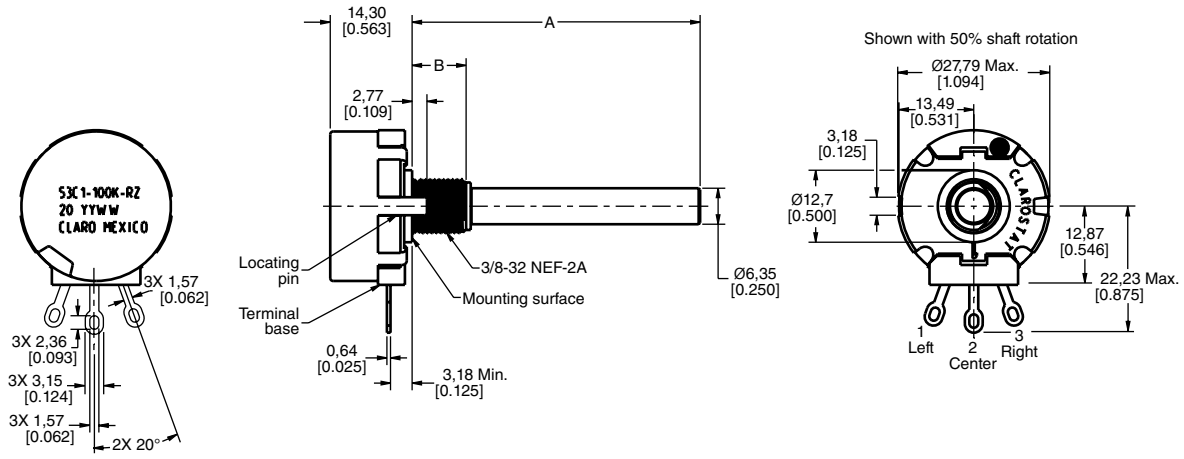

# 53C Series Order Guides

**Table 53C2 Order Guide**

| Catalog Listing | Electrical | | | | | | | Mechanical | | | | Dimensions | | RoHS Compliant | Mounting Hardware |
|---|---|---|---|---|---|---|---|---|---|---|---|---|---|---|---|
| | Resistance (Ohm) | Resistance Tolerance (±%) | End Resistance at CW, Max. (Ohm) | End Resistance at CCW, Max. (Ohm) | Effective Electrical Rotation, Typ. (Degree) | Electrical Rotation, ±3 (Degree) | Taper | Mechanical Rotation (Degree) | Operating Torque (mN m [in-oz]) | Stop Torque (N m [in-lb]) | Shaft Seal | A<br>Shaft Length (mm [in]) | B<br>Bushing Length (mm [in]) | | |
| 53C2100 | 100 | 10 | 4 | 4 | 274 | 312 | S-4 | 312 | 1-6 [7-42] | 12 [1.4] | no | 15,88 [0.625] | 12,7 [0.500] | no | unassembled |
| 53C2100K | 100 k | 10 | 4 | 4 | 274 | 312 | S-4 | 312 | 1-6 [7-42] | 12 [1.4] | no | 15,88 [0.625] | 12,7 [0.500] | no | unassembled |
| 53C210K | 10 k | 10 | 4 | 4 | 274 | 312 | S-4 | 312 | 1-6 [7-42] | 12 [1.4] | no | 15,88 [0.625] | 12,7 [0.500] | no | unassembled |
| 53C21500 | 1.5 k | 10 | 4 | 4 | 274 | 312 | S-4 | 312 | 1-6 [7-42] | 12 [1.4] | no | 15,88 [0.625] | 12,7 [0.500] | no | unassembled |
| 53C2150K | 150 k | 10 | 4 | 4 | 274 | 312 | S-4 | 312 | 1-6 [7-42] | 12 [1.4] | no | 15,88 [0.625] | 12,7 [0.500] | no | unassembled |
| 53C215K | 15 k | 10 | 4 | 4 | 274 | 312 | S-4 | 312 | 1-6 [7-42] | 12 [1.4] | no | 15,88 [0.625] | 12,7 [0.500] | no | unassembled |
| 53C21K | 1 k | 10 | 4 | 4 | 274 | 312 | S-4 | 312 | 1-6 [7-42] | 12 [1.4] | no | 15,88 [0.625] | 12,7 [0.500] | no | unassembled |
| 53C21MEG | 1 M | 10 | 10 | 10 | 274 | 312 | S-4 | 312 | 1-6 [7-42] | 12 [1.4] | no | 15,88 [0.625] | 12,7 [0.500] | no | unassembled |
| 53C22.5MEG | 2.5 M | 20 | 10 | 10 | 274 | 312 | S-4 | 312 | 1-6 [7-42] | 12 [1.4] | no | 15,88 [0.625] | 12,7 [0.500] | no | unassembled |
| 53C220K | 20 k | 10 | 4 | 4 | 274 | 312 | S-4 | 312 | 1-6 [7-42] | 12 [1.4] | no | 15,88 [0.625] | 12,7 [0.500] | no | unassembled |
| 53C2250 | 250 | 10 | 4 | 4 | 274 | 312 | S-4 | 312 | 1-6 [7-42] | 12 [1.4] | no | 15,88 [0.625] | 12,7 [0.500] | no | unassembled |
| 53C22500 | 2.5 k | 10 | 4 | 4 | 274 | 312 | S-4 | 312 | 1-6 [7-42] | 12 [1.4] | no | 15,88 [0.625] | 12,7 [0.500] | no | unassembled |
| 53C2250K | 250 k | 10 | 10 | 10 | 274 | 312 | S-4 | 312 | 1-6 [7-42] | 12 [1.4] | no | 15,88 [0.625] | 12,7 [0.500] | no | unassembled |
| 53C225K | 25 k | 10 | 4 | 4 | 274 | 312 | S-4 | 312 | 1-6 [7-42] | 12 [1.4] | no | 15,88 [0.625] | 12,7 [0.500] | no | unassembled |
| 53C22K | 2 k | 10 | 4 | 4 | 274 | 312 | S-4 | 312 | 1-6 [7-42] | 12 [1.4] | no | 15,88 [0.625] | 12,7 [0.500] | no | unassembled |
| 53C22MEG | 2 M | 20 | 10 | 10 | 274 | 312 | S-4 | 312 | 1-6 [7-42] | 12 [1.4] | no | 15,88 [0.625] | 12,7 [0.500] | no | unassembled |
| 53C23.5MEG | 3.5 M | 20 | 10 | 10 | 274 | 312 | S-4 | 312 | 1-6 [7-42] | 12 [1.4] | no | 15,88 [0.625] | 12,7 [0.500] | no | unassembled |
| 53C250 | 50 | 10 | 4 | 4 | 274 | 312 | S-4 | 312 | 1-6 [7-42] | 12 [1.4] | no | 15,88 [0.625] | 12,7 [0.500] | no | unassembled |
| 53C2500 | 500 | 10 | 4 | 4 | 274 | 312 | S-4 | 312 | 1-6 [7-42] | 12 [1.4] | no | 15,88 [0.625] | 12,7 [0.500] | no | unassembled |
| 53C2500K | 500 k | 10 | 10 | 10 | 274 | 312 | S-4 | 312 | 1-6 [7-42] | 12 [1.4] | no | 15,88 [0.625] | 12,7 [0.500] | no | unassembled |
| 53C250K | 50 k | 10 | 4 | 4 | 274 | 312 | S-4 | 312 | 1-6 [7-42] | 12 [1.4] | no | 15,88 [0.625] | 12,7 [0.500] | no | unassembled |
| 53C25K | 5 k | 10 | 4 | 4 | 274 | 312 | S-4 | 312 | 1-6 [7-42] | 12 [1.4] | no | 15,88 [0.625] | 12,7 [0.500] | no | unassembled |
| 53C25MEG | 5 M | 20 | 10 | 10 | 274 | 312 | S-4 | 312 | 1-6 [7-42] | 12 [1.4] | no | 15,88 [0.625] | 12,7 [0.500] | no | unassembled |

**Dimensional Drawings (For reference only: mm [in].)**

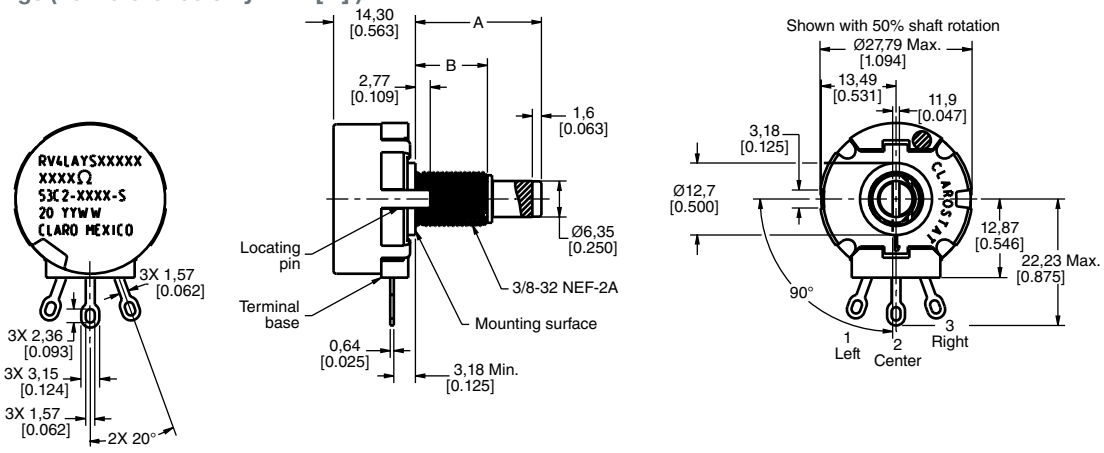

# 53C Series Order Guide

**Table 53C3 Order Guide**

| Catalog Listing | Electrical | | | | | | | Mechanical | | | | Dimensions | | RoHS Compliant | Mounting Hardware |
|---|---|---|---|---|---|---|---|---|---|---|---|---|---|---|---|
| | Resistance (Ohm) | Resistance Tolerance (±%) | End Resistance at CW, Max. (Ohm) | End Resistance at CCW, Max. (Ohm) | Effective Electrical Rotation, Typ. (Degree) | Electrical Rotation, ±3 (Degree) | Taper | Mechanical Rotation (Degree) | Operating Torque (mN m [in-oz]) | Stop Torque (N m [in-lb]) | Shaft Seal | A<br>Shaft Length (mm [in]) | B<br>Bushing Length (mm [in]) | | |
| 53C3100 | 100 | 10 | 4 | 4 | 274 | 312 | S-4 | 312 | 1-6 [7-42] | 12 [1.4] | no | 22,23 [0.875] | 9,53 [0.375] | no | unassembled |
| 53C3100K | 100 k | 10 | 4 | 4 | 274 | 312 | S-4 | 312 | 1-6 [7-42] | 12 [1.4] | no | 22,23 [0.875] | 9,53 [0.375] | no | unassembled |
| 53C310K | 10 k | 10 | 4 | 4 | 274 | 312 | S-4 | 312 | 1-6 [7-42] | 12 [1.4] | no | 22,23 [0.875] | 9,53 [0.375] | no | unassembled |
| 53C3150 | 150 | 10 | 4 | 4 | 274 | 312 | S-4 | 312 | 1-6 [7-42] | 12 [1.4] | no | 22,23 [0.875] | 9,53 [0.375] | no | unassembled |
| 53C31500 | 1.5 k | 10 | 4 | 4 | 274 | 312 | S-4 | 312 | 1-6 [7-42] | 12 [1.4] | no | 22,23 [0.875] | 9,53 [0.375] | no | unassembled |
| 53C3150K | 150 K | 10 | 4 | 4 | 274 | 312 | S-4 | 312 | 1-6 [7-42] | 12 [1.4] | no | 22,23 [0.875] | 9,53 [0.375] | no | unassembled |
| 53C315K | 15 k | 10 | 4 | 4 | 274 | 312 | S-4 | 312 | 1-6 [7-42] | 12 [1.4 | no | 22,23 [0.875] | 9,53 [0.375] | no | unassembled |
| 53C31K | 1 k | 10 | 4 | 4 | 274 | 312 | S-4 | 312 | 1-6 [7-42] | 12 [1.4] | no | 22,23 [0.875] | 9,53 [0.375] | no | unassembled |
| 53C31K/NEW | 1 k | 10 | 4 | 4 | 274 | 312 | S-4 | 312 | 1-6 [7-42] | 12 [1.4] | no | 22,23 [0.875] | 9,53 [0.375] | no | unassembled |
| 53C31MEG | 1 M | 10 | 10 | 10 | 274 | 312 | S-4 | 312 | 1-6 [7-42] | 12 [1.4] | no | 22,23 [0.875] | 9,53 [0.375] | no | unassembled |
| 53C32.5MEG | 2.5 M | 20 | 10 | 10 | 274 | 312 | S-4 | 312 | 1-6 [7-42] | 12 [1.4] | no | 22,23 [0.875] | 9,53 [0.375] | no | unassembled |
| 53C3200K | 200 k | 10 | 4 | 4 | 274 | 312 | S-4 | 312 | 1-6 [7-42] | 12 [1.4] | no | 22,23 [0.875] | 9,53 [0.375] | no | unassembled |
| 53C320K | 20 k | 10 | 4 | 4 | 274 | 312 | S-4 | 312 | 1-6 [7-42] | 12 [1.4] | no | 22,23 [0.875] | 9,53 [0.375] | no | unassembled |
| 53C3250 | 250 | 10 | 4 | 4 | 274 | 312 | S-4 | 312 | 1-6 [7-42] | 12 [1.4] | no | 22,23 [0.875] | 9,53 [0.375] | no | unassembled |
| 53C32500 | 2.5 k | 10 | 4 | 4 | 274 | 312 | S-4 | 312 | 1-6 [7-42] | 12 [1.4] | no | 22,23 [0.875] | 9,53 [0.375] | no | unassembled |
| 53C3250K | 250 k | 10 | 10 | 10 | 274 | 312 | S-4 | 312 | 1-6 [7-42] | 12 [1.4] | no | 22,23 [0.875] | 9,53 [0.375] | no | unassembled |
| 53C325K | 25 k | 10 | 4 | 4 | 274 | 312 | S-4 | 312 | 1-6 [7-42] | 12 [1.4] | no | 22,23 [0.875] | 9,53 [0.375] | no | unassembled |
| 53C32K | 2 k | 10 | 4 | 4 | 274 | 312 | S-4 | 312 | 1-6 [7-42] | 12 [1.4] | no | 22,23 [0.875] | 9,53 [0.375] | no | unassembled |
| 53C32MEG | 2 M | 20 | 10 | 10 | 274 | 312 | S-4 | 312 | 1-6 [7-42] | 12 [1.4] | no | 22,23 [0.875] | 9,53 [0.375] | no | unassembled |
| 53C3350 | 350 | 10 | 4 | 4 | 274 | 312 | S-4 | 312 | 1-6 [7-42] | 12 [1.4] | no | 22,23 [0.875] | 9,53 [0.375] | no | unassembled |
| 53C33500 | 3.5 k | 10 | 4 | 4 | 274 | 312 | S-4 | 312 | 1-6 [7-42] | 12 [1.4] | no | 22,23 [0.875] | 9,53 [0.375] | no | unassembled |
| 53C350 | 50 | 10 | 4 | 4 | 274 | 312 | S-4 | 312 | 1-6 [7-42] | 12 [1.4] | no | 22,23 [0.875] | 9,53 [0.375] | no | unassembled |
| 53C3500 | 500 | 10 | 4 | 4 | 274 | 312 | S-4 | 312 | 1-6 [7-42] | 12 [1.4] | no | 22,23 [0.875] | 9,53 [0.375] | no | unassembled |
| 53C3500K | 500 k | 10 | 10 | 10 | 274 | 312 | S-4 | 312 | 1-6 [7-42] | 12 [1.4] | no | 22,23 [0.875] | 9,53 [0.375] | no | unassembled |
| 53C3500K/NEW | 500 k | 10 | 10 | 10 | 274 | 312 | S-4 | 312 | 1-6 [7-42] | 12 [1.4] | no | 22,23 [0.875] | 9,53 [0.375] | no | unassembled |
| 53C350K | 50 k | 10 | 4 | 4 | 274 | 312 | S-4 | 312 | 1-6 [7-42] | 12 [1.4] | no | 22,23 [0.875] | 9,53 [0.375] | no | unassembled |

**(Continued on next page.)**

# 53C Series Order Guide

**Table 53C3 Order Guide (continued)**

| Catalog Listing | Electrical | | | | | | | Mechanical | | | | Dimensions | | RoHS Compliant | Mounting Hardware |
|---|---|---|---|---|---|---|---|---|---|---|---|---|---|---|---|
| | Resistance (Ohm) | Resistance Tolerance (±%) | End Resistance at CW, Max. (Ohm) | End Resistance at CCW, Max. (Ohm) | Effective Electrical Rotation, Typ. (Degree) | Electrical Rotation, ±3 (Degree) | Taper | Mechanical Rotation (Degree) | Operating Torque (mN m [in-oz]) | Stop Torque (N m [in-lb]) | Shaft Seal | A<br>Shaft Length (mm [in]) | B<br>Bushing Length (mm [in]) | | |
| 53C35K | 5 k | 10 | 4 | 4 | 274 | 312 | S-4 | 312 | 1-6 [7-42] | 12 [1.4] | no | 22,23 [0.875] | 9,53 [0.375] | no | unassembled |
| 53C35MEG | 5 M | 20 | 10 | 10 | 274 | 312 | S-4 | 312 | 1-6 [7-42] | 12 [1.4] | no | 22,23 [0.875] | 9,53 [0.375] | no | unassembled |
| 53C3750K | 750 k | 10 | 4 | 4 | 274 | 312 | S-4 | 312 | 1-6 [7-42] | 12 [1.4] | no | 22,23 [0.875] | 9,53 [0.375] | no | unassembled |
| 53C375K | 75 k | 10 | 4 | 4 | 274 | 312 | S-4 | 312 | 1-6 [7-42] | 12 [1.4] | no | 22,23 [0.875] | 9,53 [0.375] | no | unassembled |

**Dimensional Drawings (For reference only: mm [in].)**

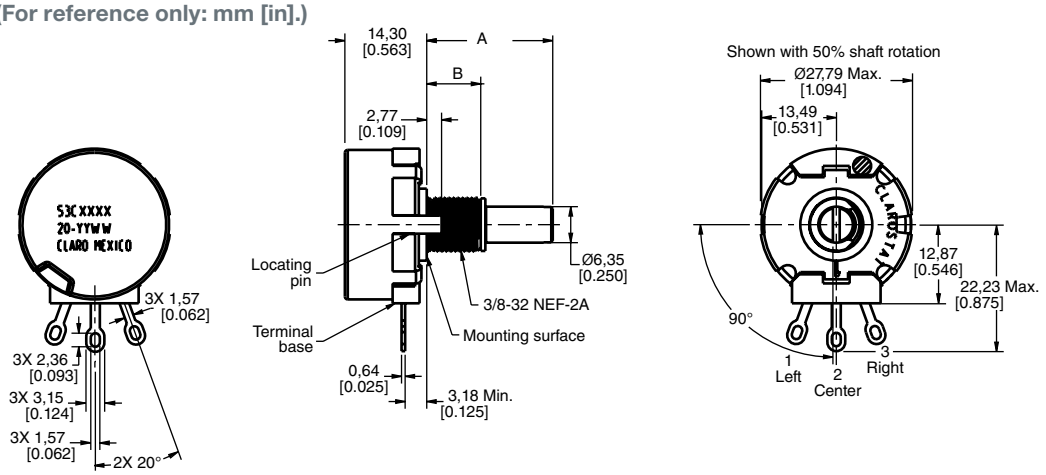

# 385 Series Specific Configurations

**Table 9. 385 Series Specific Configurations**

| Shaft Type | Bushing Type | AR Pin | Termin-ation | Configuration with Associated Hardware | Shaft Type | Bushing Type | AR Pin | Termin-ation | Configuration with Associated Hardware |
|---|---|---|---|---|---|---|---|---|---|
| **385-A (See Table 385-A on p. 40.)** | | | | | **385-B (See Table 385-B on p. 40.)** | | | | |
| flatted | standard, 9,53 mm [0.375 in] | 1 | solder lug | 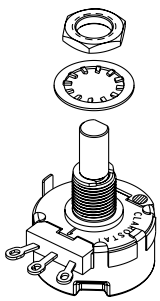 | round | standard, 9,53 mm [0.375 in] | 1 | solder lug | 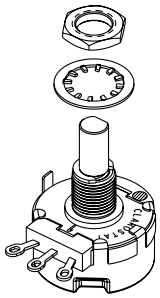 |
| **385-C (See Table 385-C on p. 41.)** | | | | | **385-D (See Table 385-D on p. 41.)** | | | | |
| flatted | standard, 9,53 mm [0.375 in] | 1 and 2 | solder lug | 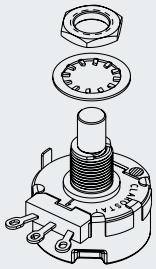 | slotted | standard, 9,53 mm [0.375 in] | 1 | solder lug | 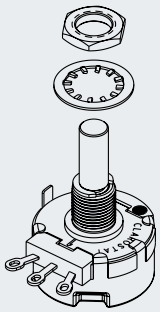 |
| **385-E (See Table 385-E on p. 42.)** | | | | | **385-F (See Table 385-F on p. 42.)** | | | | |
| slotted | high torque, 12,7 mm [0.500 in] | 1 | solder lug | 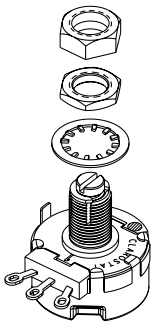 | slotted | high torque, 12,7 mm [0.500 in] | 1 | solder lug | 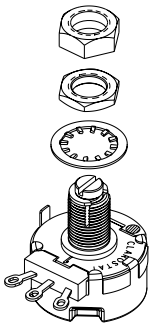 |
| **385-G (See Table 385-G on p. 43.)** | | | | | **385-H (See Table 385-H on p. 43.)** | | | | |
| slotted | high torque, 12,7 mm [0.500 in] | 1 | solder lug | 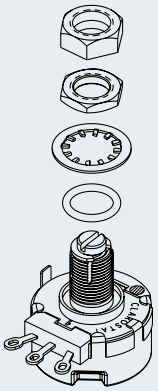 | slotted | standard, 9,53 mm [0.375 in] | 1 | solder lug | 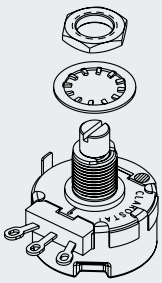 |

# 385 Series Specific Configurations

**Table 9. 385 Series Specific Configurations (continued)**

| Shaft Type | Bushing Type | AR Pin | Termin-ation | Configuration with Associated Hardware | Shaft Type | Bushing Type | AR Pin | Termin-ation | Configuration with Associated Hardware |
|---|---|---|---|---|---|---|---|---|---|
| **385-I (See Table 385-I on p. 44.)** | | | | | **385-J (See Table 385-J on p. 45.)** | | | | |
| slotted | standard, 9,53 mm [0.375 in] | 1 | solder lug | 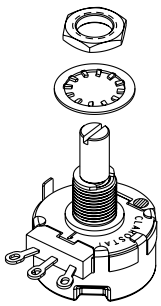 | slotted | standard, 9,53 mm [0.375 in] | 1 | solder lug | 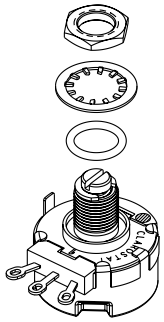 |
| **385-K (See Table 385-K on p. 45.)** | | | | | **385-L (See Table 385-L on p. 46.)** | | | | |
| slotted | standard, 9,53 mm [0.375 in] | 1 | solder lug | 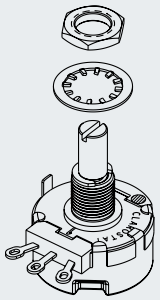 | slotted | standard, 9,53 mm [0.375 in] | 1 | solder lug | 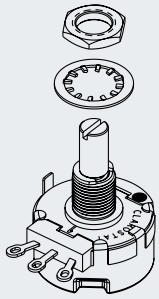 |

# 385 Series Order Guides

### Table 385-A Order Guide

| Catalog Listing | Electrical | | | | | | | Mechanical | | | | Dimensions | | | | RoHS Compliant | Mounting Hardware |
|---|---|---|---|---|---|---|---|---|---|---|---|---|---|---|---|---|---|
| | Resistance (Ohm) | Resistance Tolerance (±%) | End Resistance at CW, Max. (Ohm) | End Resistance at CCW, Max. (Ohm) | Effective Electrical Rotation, Typ. (Degree) | Electrical Rotation, ±3 (Degree) | Taper | Mechanical Rotation (Degree) | Operating Torque (mN m [in-oz]) | Stop Torque (N m [in-lb]) | Shaft Seal | A<br>Flat Length (mm [in]) | B<br>Flat Thickness (mm [in]) | C<br>Shaft Length (mm [in]) | D<br>Bushing Length (mm [in]) | | |
| 385000M5783 | 10 k | 10 | 4 | 4 | 274 | 312 | S-4 | 312 | 1-4 [7-28] | 12 [1.4] | no | 12,27 [0.483] | 5,53 [0.218] | 22,23 [0.875] | 9,53 [0.375] | yes | unassembled |
| 385000M9136 | 5 k | 10 | 4 | 4 | 274 | 312 | S-4 | 312 | 1-4 [7-28] | 12 [1.4] | no | 9,53 [0.375] | 3,96 [0.156] | 22,23 [0.875] | 9,53 [0.375] | yes | unassembled |

### Dimensional Drawings (For reference only: mm [in].)

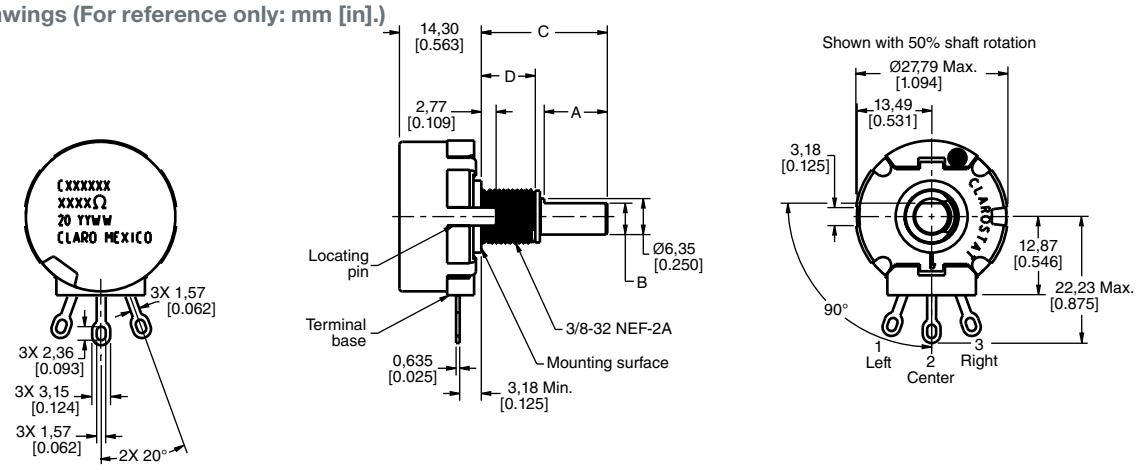


### Table 385-B Order Guide

| Catalog Listing | Electrical | | | | | | | Mechanical | | | | Dimensions | | | | RoHS Compliant | Mounting Hardware |
|---|---|---|---|---|---|---|---|---|---|---|---|---|---|---|---|---|---|
| | Resistance (Ohm) | Resistance Tolerance (±%) | End Resistance at CW, Max. (Ohm) | End Resistance at CCW, Max. (Ohm) | Effective Electrical Rotation, Typ. (Degree) | Electrical Rotation, ±3 (Degree) | Taper | Mechanical Rotation (Degree) | Operating Torque (mN m [in-oz]) | Stop Torque (N m [in-lb]) | Shaft Seal | A<br>Flat Length (mm [in]) | B<br>Flat Thickness (mm [in]) | C<br>Shaft Length (mm [in]) | D<br>Bushing Length (mm [in]) | | |
| 385500M0012 | 100 k | 10 | 4 | 4 | 274 | 312 | S-4 | 312 | 1-4 [7-28] | 12 [1.4] | no | 9,53 [0.375] | 5,53 [0.218] | 22,23 [0.875] | 9,53 [0.375] | no | unassembled |
| 385500M4863 | 1 k | 10 | 4 | 4 | 274 | 312 | S-4 | 312 | 1-4 [7-28] | 12 [1.4] | no | 9,53 [0.375] | 5,53 [0.218] | 22,23 [0.875] | 9,53 [0.375] | no | unassembled |
| 385500M5694 | 5 k | 10 | 4 | 4 | 274 | 312 | S-4 | 312 | 1-4 [7-28] | 12 [1.4] | no | 9,53 [0.375] | 5,53 [0.218] | 22,23 [0.875] | 9,53 [0.375] | no | unassembled |

### Dimensional Drawings (For reference only: mm [in].)

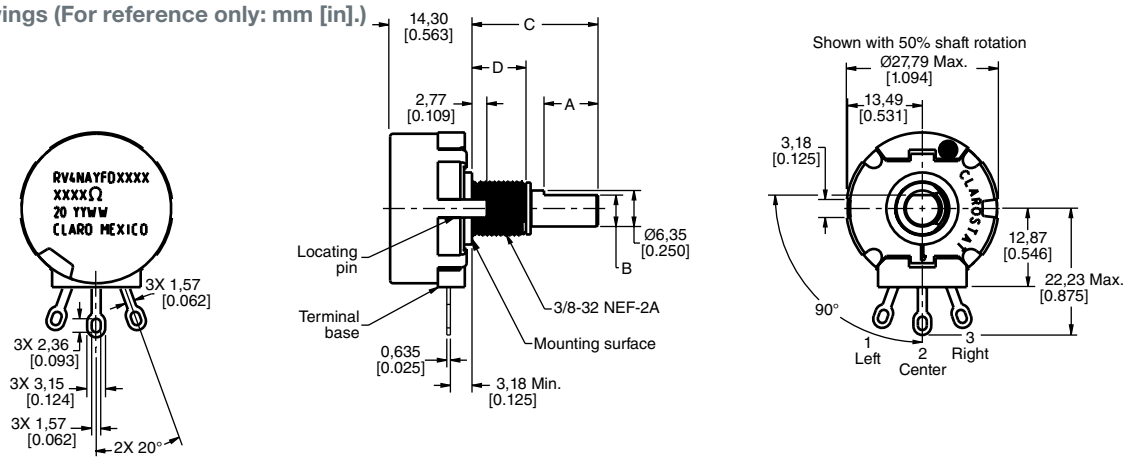

# 385 Series Order Guides

### Table 385-C Order Guide

| Catalog Listing | Electrical | | | | | | | Mechanical | | | | Dimensions | | RoHS Compliant | Mounting Hardware |
|---|---|---|---|---|---|---|---|---|---|---|---|---|---|---|---|
| | Resistance (Ohm) | Resistance Tolerance (±%) | End Resistance at CW, Max. (Ohm) | End Resistance at CCW, Max. (Ohm) | Effective Electrical Rotation, Typ. (Degree) | Electrical Rotation, ±3 (Degree) | Taper | Mechanical Rotation (Degree) | Operating Torque (mN m [in-oz]) | Stop Torque (N m [in-lb]) | Shaft Seal | A<br>Shaft Length (mm [in]) | B<br>Bushing Length (mm [in]) | | |
| 385000M8551 | 150 | 10 | 4 | 4 | 274 | 312 | S-4 | 312 | 1-4 [7-28] | 12 [1.4] | no | 19,05 [0.750] | 9,53 [0.375] | yes | unassembled |
| 385000M9168 | 100 | 10 | 4 | 4 | 274 | 312 | S-4 | 312 | 1-4 [7-28] | 12 [1.4] | no | 19,05 [0.750] | 9,53 [0.375] | yes | unassembled |

### Dimensional Drawings (For reference only: mm [in].)

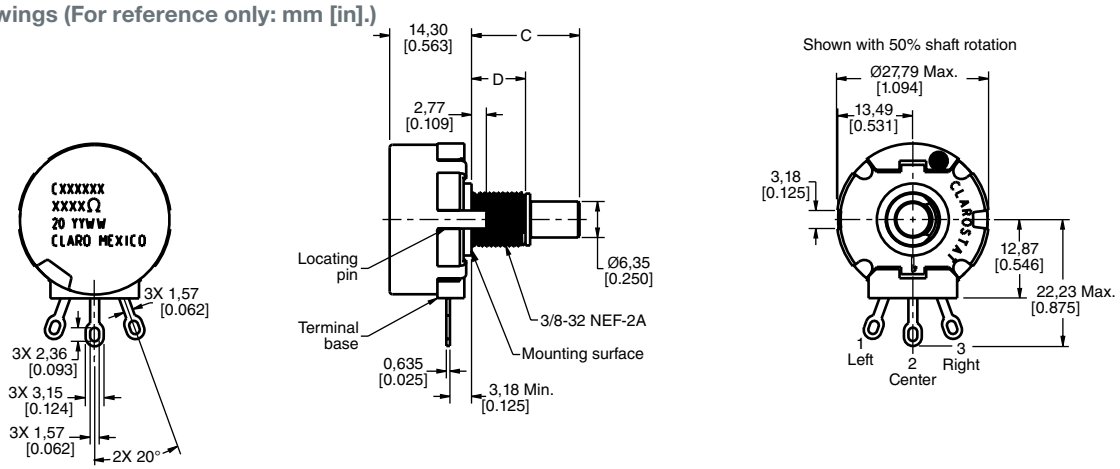


### Table 385-D Order Guide

| Catalog Listing | Electrical | | | | | | | Mechanical | | | | Dimensions | | RoHS Compliant | Mounting Hardware |
|---|---|---|---|---|---|---|---|---|---|---|---|---|---|---|---|
| | Resistance (Ohm) | Resistance Tolerance (±%) | End Resistance at CW, Max. (Ohm) | End Resistance at CCW, Max. (Ohm) | Effective Electrical Rotation, Typ. (Degree) | Electrical Rotation, ±3 (Degree) | Taper | Mechanical Rotation (Degree) | Operating Torque (mN m [in-oz]) | Stop Torque (N m [in-lb]) | Shaft Seal | A<br>Shaft Length (mm [in]) | B<br>Bushing Length (mm [in]) | | |
| 385000M8659 | 10 k | 10 | 100 | 4 | 274 | 312 | Z | 312 | 1-4 [7-28] | 12 [1.4] | no | 25,4 [1.000] | 9,53 [0.375] | yes | unassembled |

### Dimensional Drawings (For reference only: mm [in].)

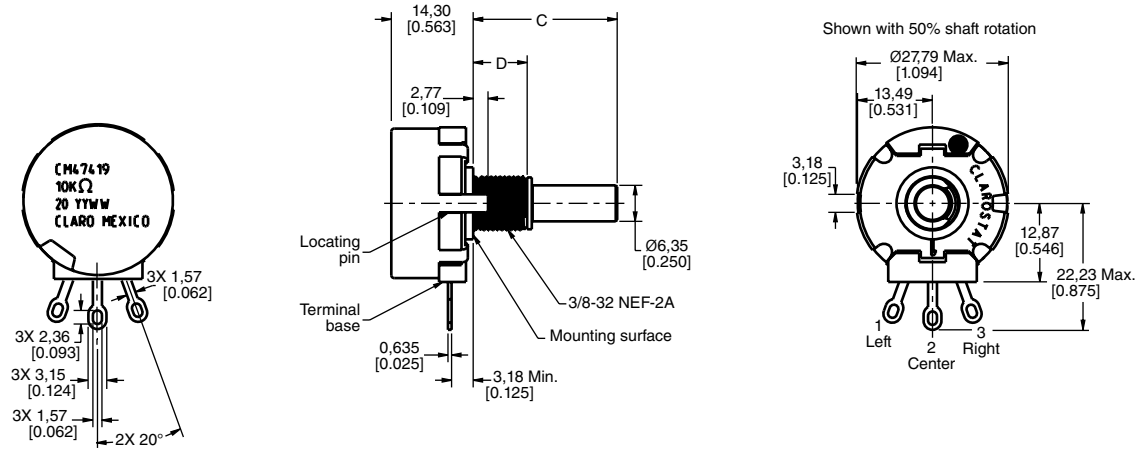

# 385 Series Order Guides

### Table 385-E Order Guide

| Catalog Listing | Electrical | | | | | | | Mechanical | | | | Dimensions | | | | RoHS Compliant | Mounting Hardware |
|---|---|---|---|---|---|---|---|---|---|---|---|---|---|---|---|---|---|
| | Resistance (Ohm) | Resistance Tolerance (±%) | End Resistance at CW, Max. (Ohm) | End Resistance at CCW, Max. (Ohm) | Effective Electrical Rotation, Typ. (Degree) | Electrical Rotation, ±3 (Degree) | Taper | Mechanical Rotation (Degree) | Operating Torque (mN m [in-oz]) | Stop Torque (N m [in-lb]) | Shaft Seal | A<br>Slot Length (mm [in]) | B<br>Slot Thickness (mm [in]) | C<br>Shaft Length (mm [in]) | D<br>Bushing Length (mm [in]) | | |
| 385500M9303 | 75 | 10 | 4 | 4 | 274 | 312 | S-4 | 312 | 1-4 [7-28] | 12 [1.4] | no | 1,60 [0.063] | 1,19 [0.047] | 15,88 [0.625] | 12,7 [0.500] | yes | unassembled |

### Dimensional Drawings (For reference only: mm [in].)

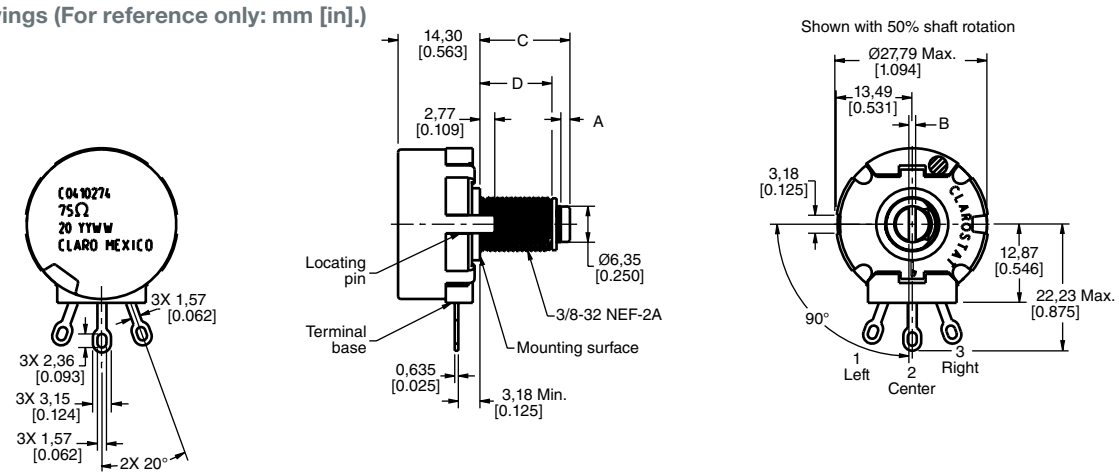


### Table 385-F Order Guide

| Catalog Listing | Electrical | | | | | | | Mechanical | | | | Dimensions | | | | RoHS Compliant | Mounting Hardware |
|---|---|---|---|---|---|---|---|---|---|---|---|---|---|---|---|---|---|
| | Resistance (Ohm) | Resistance Tolerance (±%) | End Resistance at CW, Max. (Ohm) | End Resistance at CCW, Max. (Ohm) | Effective Electrical Rotation, Typ. (Degree) | Electrical Rotation, ±3 (Degree) | Taper | Mechanical Rotation (Degree) | Operating Torque (mN m [in-oz]) | Stop Torque (N m [in-lb]) | Shaft Seal | A<br>Slot Length (mm [in]) | B<br>Slot Thickness (mm [in]) | C<br>Shaft Length (mm [in]) | D<br>Bushing Length (mm [in]) | | |
| 385500M1654 | 200 | 10 | 4 | 4 | 274 | 312 | S-4 | 312 | 1-4 [7-28] | 12 [1.4] | no | 1,60 [0.063] | 1,19 [0.047] | 15,88 [0.625] | 12,7 [0.500] | no | unassembled |

### Dimensional Drawings (For reference only: mm [in].)

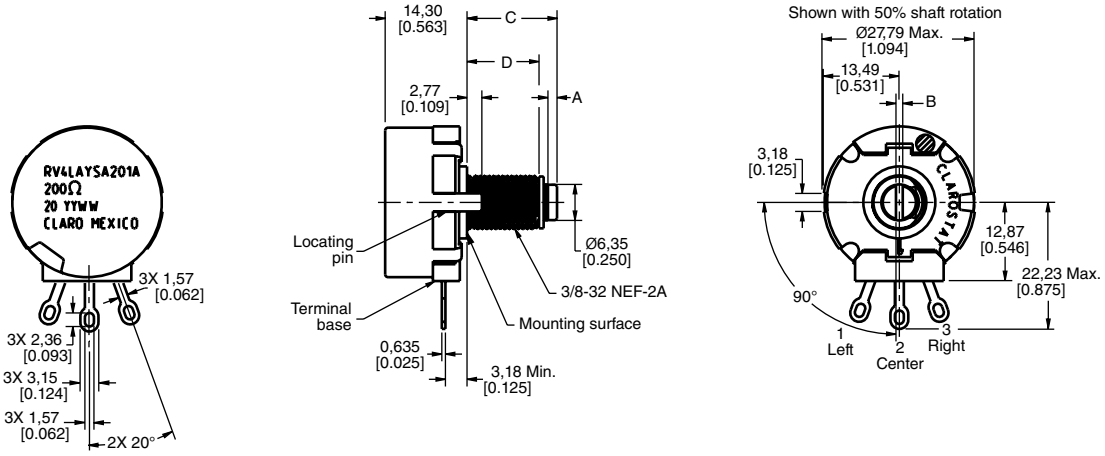

# 385 Series Order Guides

### Table 385-G Order Guide

| Catalog Listing | Electrical | | | | | | | Mechanical | | | | Dimensions | | | | RoHS Compliant | Mounting Hardware |
|---|---|---|---|---|---|---|---|---|---|---|---|---|---|---|---|---|---|
| | Resistance (Ohm) | Resistance Tolerance (±%) | End Resistance at CW, Max. (Ohm) | End Resistance at CCW, Max. (Ohm) | Effective Electrical Rotation, Typ. (Degree) | Electrical Rotation, ±3 (Degree) | Taper | Mechanical Rotation (Degree) | Operating Torque (mN m [in-oz]) | Stop Torque (N m [in-lb]) | Shaft Seal | A<br>Slot Length (mm [in]) | B<br>Slot Thickness (mm [in]) | C<br>Shaft Length (mm [in]) | D<br>Bushing Length (mm [in]) | | |
| 385518M0018 | 5 k | 10 | 4 | 4 | 274 | 312 | S-4 | 312 | 1-6 [7-42] | 24 [2.8] | yes | 1,60 [0.063] | 1,19 [0.047] | 15,88 [0.625] | 12,7 [0.500] | no | unassembled |

### Dimensional Drawings (For reference only: mm [in].)

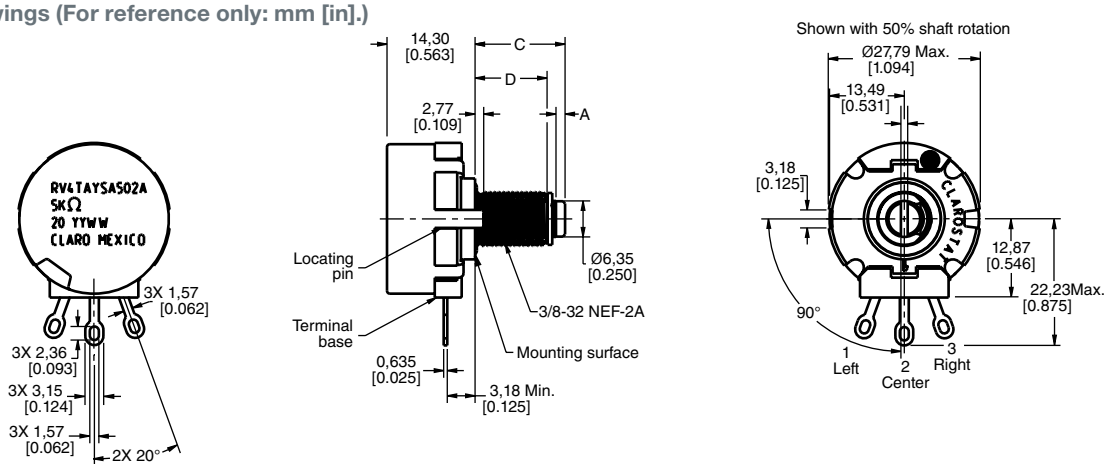


### Table 385-H Order Guide

| Catalog Listing | Electrical | | | | | | | Mechanical | | | | Dimensions | | | | RoHS Compliant | Mounting Hardware |
|---|---|---|---|---|---|---|---|---|---|---|---|---|---|---|---|---|---|
| | Resistance (Ohm) | Resistance Tolerance (±%) | End Resistance at CW, Max. (Ohm) | End Resistance at CCW, Max. (Ohm) | Effective Electrical Rotation, Typ. (Degree) | Electrical Rotation, ±3 (Degree) | Taper | Mechanical Rotation (Degree) | Operating Torque (mN m [in-oz]) | Stop Torque (N m [in-lb]) | Shaft Seal | A<br>Slot Length (mm [in]) | B<br>Slot Thickness (mm [in]) | C<br>Shaft Length (mm [in]) | D<br>Bushing Length (mm [in]) | | |
| 385000M1495 | 5 M | 10 | 4 | 4 | 274 | 312 | S-4 | 312 | 1-4 [7-28] | 12 [1.4] | no | 1,60 [0.063] | 1,19 [0.047] | 15,88 [0.625] | 9,53 [0.375] | yes | unassembled |
| 385000M6960 | 270 | 10 | 4 | 4 | 274 | 312 | S-4 | 312 | 1-4 [7-28] | 12 [1.4] | no | 1,60 [0.063] | 1,19 [0.047] | 22,23 [0.875] | 9,53 [0.375] | yes | unassembled |

### Dimensional Drawings (For reference only: mm [in].)

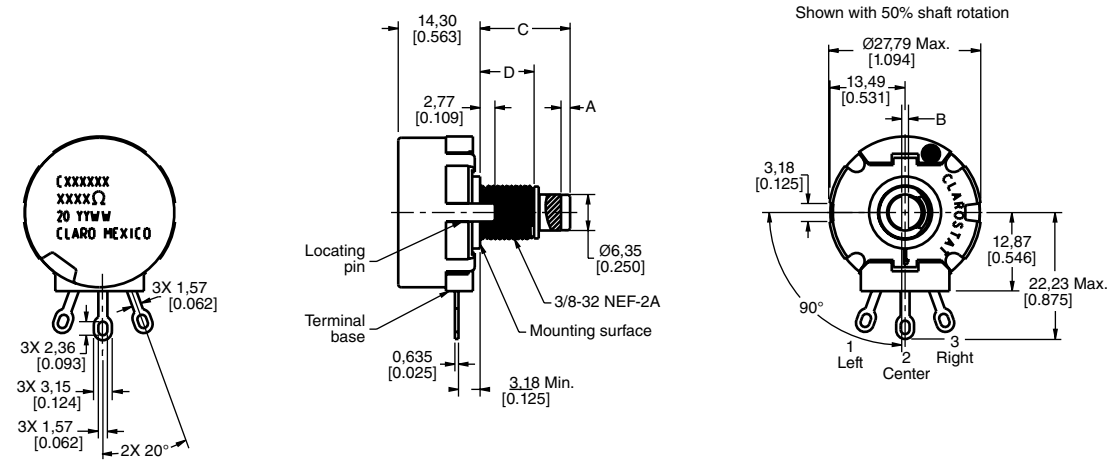

# 385 Series Order Guides

**Table 385-I Order Guide**

| Catalog Listing | Electrical | | | | | | | Mechanical | | | | Dimensions | | | | RoHS Compliant | Mounting Hardware |
|---|---|---|---|---|---|---|---|---|---|---|---|---|---|---|---|---|---|
| | Resistance (Ohm) | Resistance Tolerance (±%) | End Resistance at CW, Max. (Ohm) | End Resistance at CCW, Max. (Ohm) | Effective Electrical Rotation, Typ. (Degree) | Electrical Rotation, ±3 (Degree) | Taper | Mechanical Rotation (Degree) | Operating Torque (mN m [in-oz]) | Stop Torque (N m [in-lb]) | Shaft Seal | A<br>Slot Length (mm [in]) | B<br>Slot Thickness (mm [in]) | C<br>Shaft Length (mm [in]) | D<br>Bushing Length (mm [in]) | | |
| 385500M0297 | 10 k | 10 | 4 | 4 | 274 | 312 | S-4 | 312 | 1-4 [7-28] | 12 [1.4] | no | 1,60 [0.063] | 1,19 [0.047] | 22,23 [0.875] | 9,53 [0.375] | no | unassembled |
| 385500M0567 | 1 k | 10 | 4 | 4 | 274 | 312 | S-4 | 312 | 1-4 [7-28] | 12 [1.4] | no | 1,60 [0.063] | 1,19 [0.047] | 22,23 [0.875] | 9,53 [0.375] | no | unassembled |
| 385500M0563 | 1 k | 10 | 4 | 4 | 274 | 312 | S-4 | 312 | 1-4 [7-28] | 12 [1.4] | no | 1,60 [0.063] | 1,19 [0.047] | 31,75 [1.25] | 9,53 [0.375] | no | unassembled |
| 385500M1231 | 200 | 10 | 4 | 4 | 274 | 312 | S-4 | 312 | 1-4 [7-28] | 12 [1.4] | no | 1,60 [0.063] | 1,19 [0.047] | 22,23 [0.875] | 9,53 [0.375] | no | unassembled |
| 385500M1377 | 500 | 10 | 4 | 4 | 274 | 312 | S-4 | 312 | 1-4 [7-28] | 12 [1.4] | no | 1,60 [0.063] | 1,19 [0.047] | 22,23 [0.875] | 9,53 [0.375] | no | unassembled |

**Dimensional Drawings (For reference only: mm [in].)**

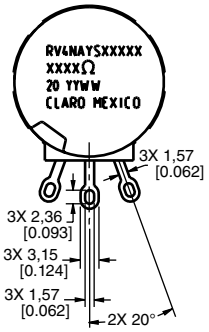


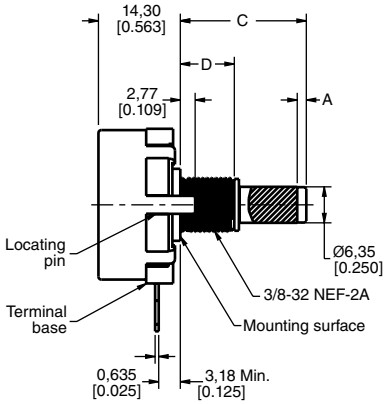


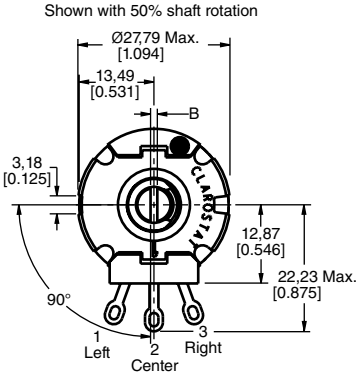

# 385 Series Order Guides

### Table 385-J Order Guide

| Catalog Listing | Electrical | | | | | | | Mechanical | | | | Dimensions | | | | RoHS Compliant | Mounting Hardware |
|---|---|---|---|---|---|---|---|---|---|---|---|---|---|---|---|---|---|
| | Resistance (Ohm) | Resistance Tolerance (±%) | End Resistance at CW, Max. (Ohm) | End Resistance at CCW, Max. (Ohm) | Effective Electrical Rotation, Typ. (Degree) | Electrical Rotation, ±3 (Degree) | Taper | Mechanical Rotation (Degree) | Operating Torque (mN m [in-oz]) | Stop Torque (N m [in-lb]) | Shaft Seal | A<br>Slot Length (mm [in]) | B<br>Slot Thickness (mm [in]) | C<br>Shaft Length (mm [in]) | D<br>Bushing Length (mm [in]) | | |
| 385518M0106 | 10 k | 10 | 4 | 4 | 274 | 312 | S-4 | 312 | 1-6 [7-42] | 12 [1.4] | yes | 1,60 [0.063] | 1,19 [0.047] | 12,7 [0.500] | 9,53 [0.375] | no | unassembled |
| 385518M0869 | 2.5 k | 10 | 4 | 4 | 274 | 312 | S-4 | 312 | 1-6 [7-42] | 12 [1.4] | yes | 1,60 [0.063] | 1,19 [0.047] | 22,23 [0.875] | 9,53 [0.375] | no | unassembled |
| 385518M1309 | 2.5 k | 10 | 4 | 4 | 274 | 312 | S-4 | 312 | 1-6 [7-42] | 12 [1.4] | yes | 1,60 [0.063] | 1,19 [0.047] | 12,7 [0.500] | 9,53 [0.375] | no | unassembled |
| 385518M1813 | 10 k | 10 | 4 | 4 | 274 | 312 | S-4 | 312 | 1-6 [7-42] | 12 [1.4] | yes | 1,60 [0.063] | 1,19 [0.047] | 22,23 [0.875] | 9,53 [0.375] | no | unassembled |
| 385518M2059 | 50 k | 10 | 4 | 4 | 274 | 312 | S-4 | 312 | 1-6 [7-42] | 12 [1.4] | yes | 1,60 [0.063] | 1,19 [0.047] | 12,7 [0.500] | 9,53 [0.375] | no | unassembled |

**Dimensional Drawings (For reference only: mm [in].)**

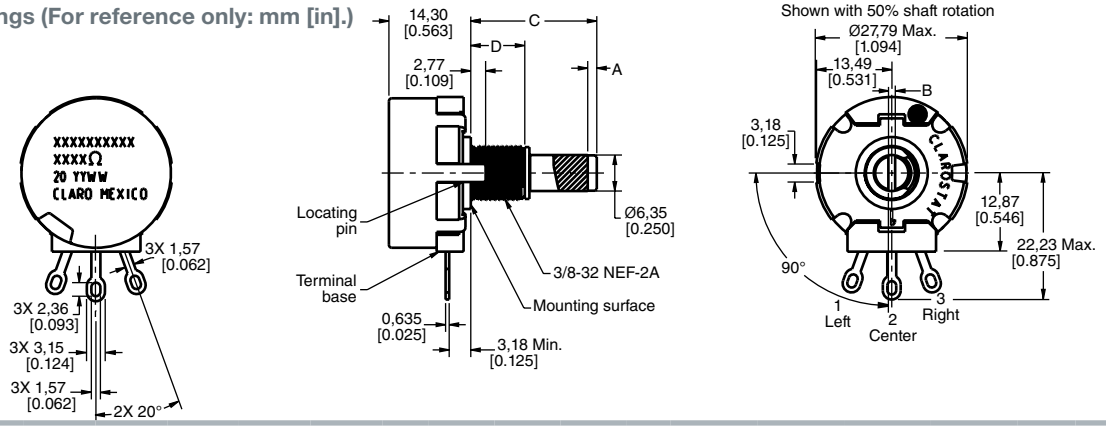


### Table 385-K Order Guide

| Catalog Listing | Electrical | | | | | | | Mechanical | | | | Dimensions | | | | RoHS Compliant | Mounting Hardware |
|---|---|---|---|---|---|---|---|---|---|---|---|---|---|---|---|---|---|
| | Resistance (Ohm) | Resistance Tolerance (±%) | End Resistance at CW, Max. (Ohm) | End Resistance at CCW, Max. (Ohm) | Effective Electrical Rotation, Typ. (Degree) | Electrical Rotation, ±3 (Degree) | Taper | Mechanical Rotation (Degree) | Operating Torque (mN m [in-oz]) | Stop Torque (N m [in-lb]) | Shaft Seal | A<br>Slot Length (mm [in]) | B<br>Slot Thickness (mm [in]) | C<br>Shaft Length (mm [in]) | D<br>Bushing Length (mm [in]) | | |
| 385000M8686 | 100 k | 10 | 4 | 4 | 274 | 312 | Z | 312 | 1-4 [7-28] | 12 [1.4] | no | 1,60 [0.063] | 1,19 [0.047] | 22,23 [0.875] | 9,53 [0.375] | yes | unassembled |
| 385500M9553 | 1 M | 20 | 10 k | 10 | 274 | 312 | Z | 312 | 1-4 [7-28] | 12 [1.4] | no | 1,60 [0.063] | 1,19 [0.047] | 22,23 [0.875] | 9,53 [0.375] | yes | unassembled |

**Dimensional Drawings (For reference only: mm [in].)**

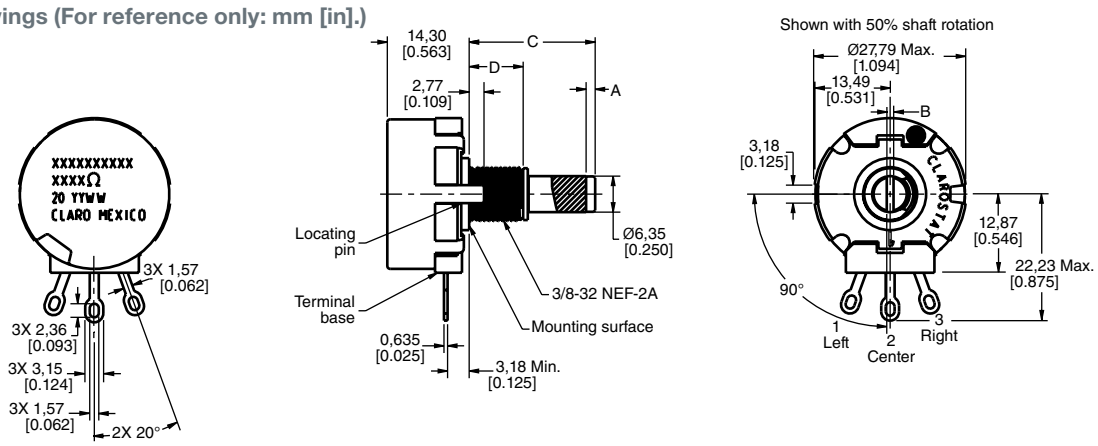

# 385 Series Order Guides

**Table 385-L Order Guide**

| Catalog Listing | Electrical | | | | | | | Mechanical | | | | Dimensions | | | | RoHS Compliant | Mounting Hardware |
|---|---|---|---|---|---|---|---|---|---|---|---|---|---|---|---|---|---|
| | Resistance (Ohm) | Resistance Tolerance (±%) | End Resistance at CW, Max. (Ohm) | End Resistance at CCW, Max. (Ohm) | Effective Electrical Rotation, Typ. (Degree) | Electrical Rotation, ±3 (Degree) | Taper | Mechanical Rotation (Degree) | Operating Torque (mN m [in-oz]) | Stop Torque (N m [in-lb]) | Shaft Seal | A<br>Slot Length (mm [in]) | B<br>Slot Thickness (mm [in]) | C<br>Shaft Length (mm [in]) | D<br>Bushing Length (mm [in]) | | |
| 385500M1246 | 250 k | 10 | 2.5 k | 10 | 274 | 312 | Z | 312 | 1-4 [7-28] | 12 [1.4] | no | 1,60 [0.063] | 1,19 [0.047] | 22,23 [0.875] | 9,53 [0.375] | no | unassembled |

**Dimensional Drawings (For reference only: mm [in].)**

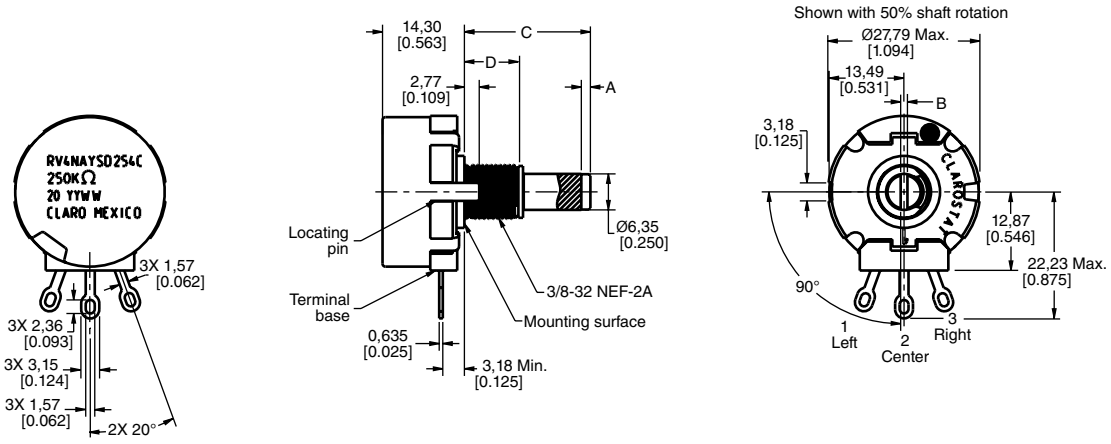

## ADDITIONAL INFORMATION

The following associated literature is available at sensing.honeywell.com:

- Product Range Guide
- Product Line Guide
- Installation Instructions

**Find out more**

Honeywell serves its customers through a worldwide network of sales offices, representatives and distributors. For application assistance, current specifications, pricing or name of the nearest Authorized Distributor, contact your local sales office.

To learn more about Honeywell's sensing and control products, call **+1-815-235-6847 or 1-800-537-6945**, visit **sensing.honeywell.com,** or e-mail inquiries to **info.sc@honeywell.com**

Sensing and Control
Honeywell
1985 Douglas Drive North
Golden Valley, MN 55422
**honeywell.com**

## ⚠ WARNING
### PERSONAL INJURY

DO NOT USE these products as safety or emergency stop devices or in any other application where failure of the product could result in personal injury.

**Failure to comply with these instructions could result in death or serious injury.**

## ⚠ WARNING
### MISUSE OF DOCUMENTATION

- The information presented in this product sheet is for reference only. Do not use this document as a product installation guide.
- Complete installation, operation, and maintenance information is provided in the instructions supplied with each product.

**Failure to comply with these instructions could result in death or serious injury.**

## WARRANTY/REMEDY

Honeywell warrants goods of its manufacture as being free of defective materials and faulty workmanship. Honeywell's standard product warranty applies unless agreed to otherwise by Honeywell in writing; please refer to your order acknowledgement or consult your local sales office for specific warranty details. If warranted goods are returned to Honeywell during the period of coverage, Honeywell will repair or replace, at its option, without charge those items it finds defective. **The foregoing is buyer's sole remedy and is in lieu of all other warranties, expressed or implied, including those of merchantability and fitness for a particular purpose. In no event shall Honeywell be liable for consequential, special, or indirect damages.**

While we provide application assistance personally, through our literature and the Honeywell website, it is up to the customer to determine the suitability of the product in the application.

Specifications may change without notice. The information we supply is believed to be accurate and reliable as of this printing. However, we assume no responsibility for its use.

Honeywell

32301266-A-EN IL5O
October 2014
© 2014 Honeywell International Inc. All rights reserved.

Общество с ограниченной ответственностью «МосЧип» ИНН 7719860671 / КПП 771901001
Адрес: 105318, г.Москва, ул.Щербаковская д.3, офис 1107

**Данный компонент на территории Российской Федерации**

**Вы можете приобрести в компании MosChip.**

Для оперативного оформления запроса Вам необходимо перейти по данной ссылке:

http://moschip.ru/get-element

Вы можете разместить у нас заказ для любого Вашего проекта, будь то серийное производство или разработка единичного прибора.

В нашем ассортименте представлены ведущие мировые производители активных и пассивных электронных компонентов.

Нашей специализацией является поставка электронной компонентной базы двойного назначения, продукции таких производителей как XILINX, Intel (ex.ALTERA), Vicor, Microchip, Texas Instruments, Analog Devices, Mini-Circuits, Amphenol, Glenair.

Сотрудничество с глобальными дистрибьюторами электронных компонентов, предоставляет возможность заказывать и получать с международных складов практически любой перечень компонентов в оптимальные для Вас сроки.

На всех этапах разработки и производства наши партнеры могут получить квалифицированную поддержку опытных инженеров.

Система менеджмента качества компании отвечает требованиям в соответствии с ГОСТ Р ИСО 9001, ГОСТ РВ 0015-002 и ЭС РД 009

**Офис по работе с юридическими лицами:**

105318, г.Москва, ул.Щербаковская д.3, офис 1107, 1118, ДЦ «Щербаковский»

Телефон: +7 495 668-12-70 (многоканальный)

Факс: +7 495 668-12-70 (доб.304)

E-mail: info@moschip.ru

Skype отдела продаж:
moschip.ru
moschip.ru_4
moschip.ru_6
moschip.ru_9