Honeywell

2 W Conductive Plastic Potentiometers

380 Series, RV4 Series, 485 Series, 53C Series, 385 Series

Datasheet

Conductive Plastic Potentiometers

Potentiometers convert rotary motion into a change of resistance, supplying a smooth transition of voltage or current levels. The resulting voltage output may be used to control position transducers in a wide variety of potential applications.

The five series listed below are all 2 W plastic potentiometers and are available in resistances from 100 Ohm to 5 MOhm, inclusive. Available tapers include linear, log, and antilog to meet a wide range of application requirements. These single turn devices have a 6,35 mm [0.250 in] diameter shaft that is available in a range of lengths. Most shafts are nickel-plated brass. Most configurations have a standard 3/8-32 NEF-2A bushing; a high torque version is also available. Termination types are solder lug (with or without a center tap), PC pin or fast-on, all are solder-dipped. Custom designs are available upon request.

- **380 Series:** 2 W conductive plastic potentiometer offering low contact resistance variation and a long rotational life
- **RV4 Series:** Military version of the 380 Series; meets MIL-R-94 requirements (non RoHS compliant)
- **485 Series:** Custom version of the 380 Series
- **53C Series:** Cost-effective version of the 380 Series
- **385 Series:** Custom version of the 53C Series

Table of Contents

General Specifications 3-6

General Configuration Guide 7

380 Series:

Specific Configurations 8

Order Guides 9-15

RV4 Series:

Specific Configurations 16

Order Guides 17-18

485 Series:

Specific Configurations 19-21

Order Guides 22-31

53C Series:

Specific Configurations 32

Order Guides 33-37

385 Series:

Specific Configurations 38-39

Order Guides 40-46

Additional Information. . . . . back page

Key Features and Benefits

- **Cost-effective:** Supplies good performance at a reasonable price
- **Wide range of resistance values (100 Ohm to 5 MOhm, inclusive):** Promotes flexibility in the applications
- **Wide variety of tapers:** Creates flexibility in output signal profile, allowing use in a wide variety of applications

Potential Applications

INDUSTRIAL/COMMERCIAL

- Audio and visual equipment (e.g., musical instruments, sound mixers, projectors, amplifiers)
- Foot pedal controls (e.g., guitars, sewing machines, woodworking equipment)
- Machine controls (e.g., joysticks)
- Welding equipment (e.g., MIG wire feed, foot pedal controls, adjustment knobs)

TRANSPORTATION

- Foot pedal controls (e.g., golf carts)
- Gear shifter, joystick, and throttle position (e.g., construction/ agricultural vehicles)

COST-EFFECTIVE • MIL-R-94 • CUSTOMIZATION AVAILABLE

General Specifications

Table 1. Electrical Specifications

Characteristic	380 Series	RV4 Series	485 Series	53C Series	385 Series
Maximum working voltage: linear tapers log, reverse log tapers	500 Vdc 350 Vdc				
Dielectric strength	1000 Vac for 60 s at 1 mPa [atm], 450 Vac for 60 s at 11,5 kPa [3.4 inHg]				
Power rating	2 W at 70 °C [158 °F], derated to 120 °C [248 °F]				
Taper	See Order Guides under each series				
CRV[1]: linear tapers log, reverse log tapers	3% max. total resistance 3% max. total resistance				
Resistance	100 Ohm to 5 MOhm, inclusive. See individual Order Guides under each series.				
Resistance tolerance	See Order Guides under each series.				
End resistance	See Order Guides under each series.				
Linearity	±5%				
Electrical rotation	See Order Guides under each series.				

[1]Contact resistance variation is the maximum momentary change in contact resistance that occurs when the wiper is moved from one location to another location. The larger this change, the more difficult it is to set the trimmer potentiometer and the more unstable the long term setting will be.

Table 2. Mechanical Specifications

Characteristic	380 Series	RV4 Series	485 Series	53C Series	385 Series
Shaft: material diameter	nickel-plated brass[1] 6,35 mm [0.250 in]				
Retaining ring material	nickel-plated brass		nickel-plated beryllium copper	nickel-plated brass	
Bushing: material thread	nickel-plated brass 3/8-32 NEF-2A				
Termination base material	thermoset				
Terminal material	brass; solder (SAC305) dip finish	brass; solder (SAC305) dip or tin-lead finish	brass; solder (SAC305) dip finish	brass; solder (SAC305) dip or tin-lead finish	
Housing material	stainless steel				
Base material	thermoset plastic				
Mounting hardware material: jam nut mounting nut lock washer o-ring	nickel-plated brass nickel-plated brass nickel-plated brass phospher bronze[1] silicone rubber				
Operating torque	See Order Guides under each series.				
Stop torque	See Order Guides under each series.				
Weight (approx.)	32.7 g [0.072 lb]				

[1]Unless otherwise specified on the Order Guides under each series.

General Specifications

Table 3. Environmental Specifcations

Characteristic	380 Series	RV4 Series	485 Series	53C Series	385 Series
Operating temperature	-55 °C to 120 °C [-67 °F to 248 °F]				
Rotational life	tested to 25,000 cycles				

Table 4. Maximum Percent Temporary Resistance from 25 °C [77 °F]

Nominal Resistance	Temperature						
	-55 °C [-67 °F]	-40 °C [-40 °F]	0 °C [32 °F]	25 °C [77 °F]	55 °C [131 °F]	85 °C [185 °F]	120 °C [248 °F]
100 Ohm	±5.0	±4.0	±1.5	0	±1.5	±2.0	±3.5
10 kOhm	+7.0	+5.5	+2.0	0	±1.5	±2.5	±5.5
100 kOhm	+8.0	+6.0	+2.5	0	±2.0	±3.5	±6.0
1 MOhm	+10.0	+8.0	+3.0	0	±2.5	±4.0	±7.5

Figure 1. Electrical Taper Diagrams (For reference only.)

Log (Z)

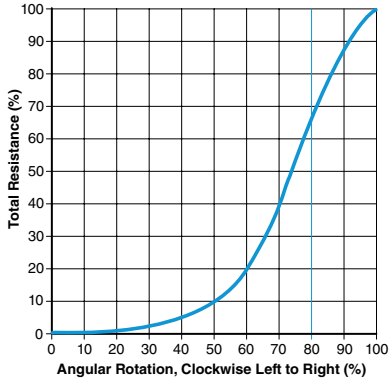

Reverse Log (RZ)

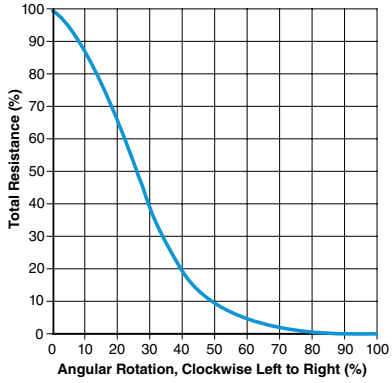

Linear: 2.5% to 97.5% (S-1)

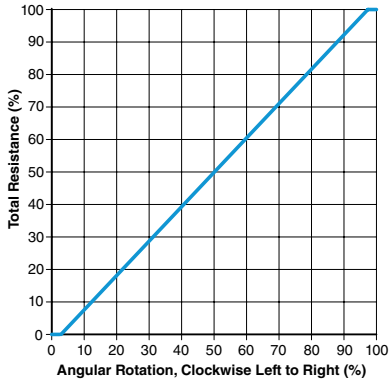

Linear: 5% to 95% (S-2)

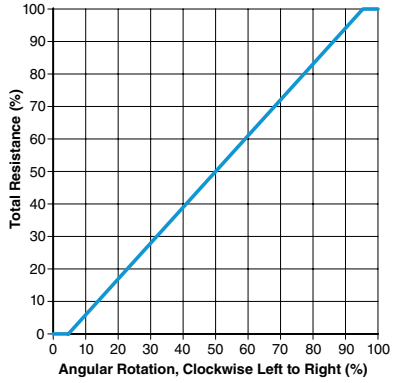

Linear: 7.5% to 92.5% (S-3)

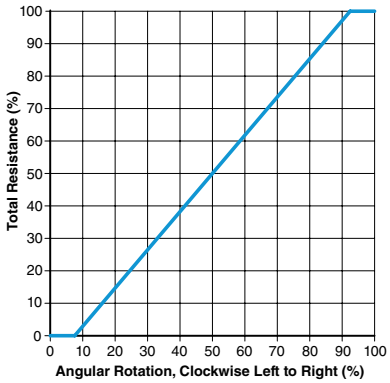

Linear: 10% to 90% (S-4)

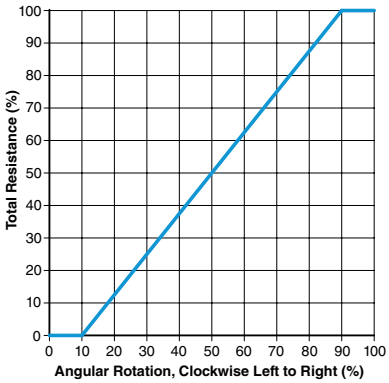

General Specifications

Figure 1. Electrical Taper Diagrams (continued)

Linear: 15% to 95% (S-5)

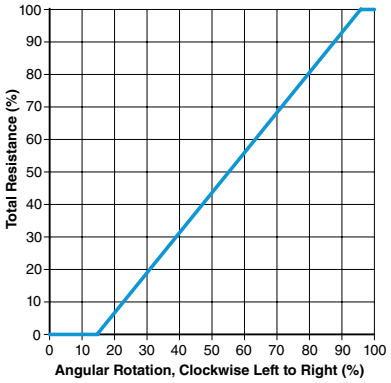

Linear: 25% to 75% (S-6)

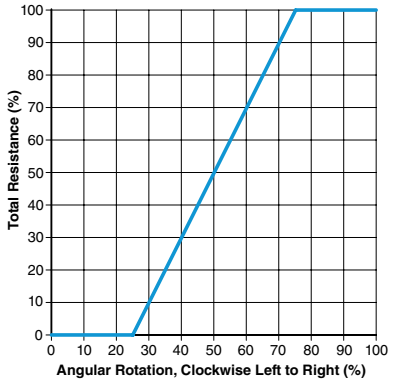

Linear: 35% to 65% (S-7)

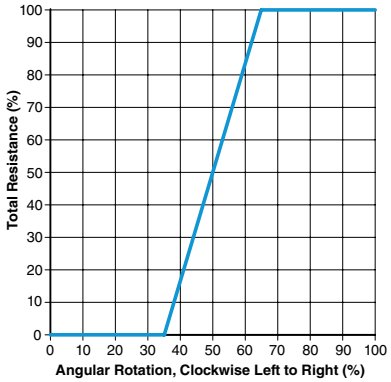

Linear: 37.5% to 82.5% (S-8)

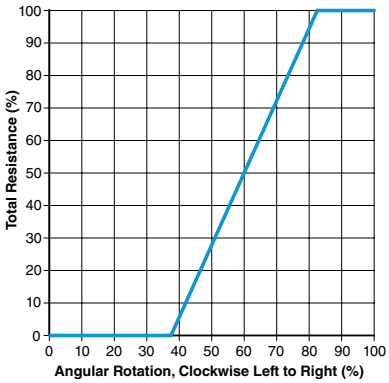

Linear: 42.5% to 57.5% (S-9)

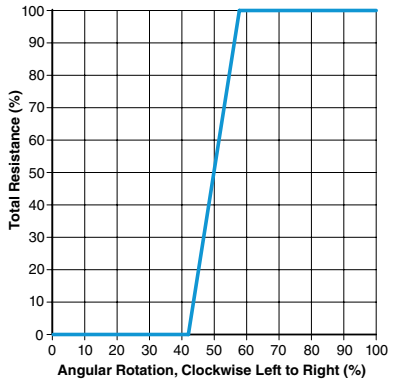

Linear: 45% to 55% (S-10)

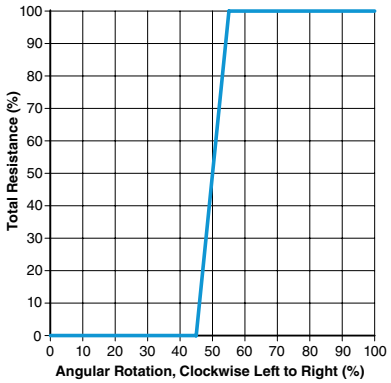

Linear: 5% to 50%; 50% to 90% (S-11)

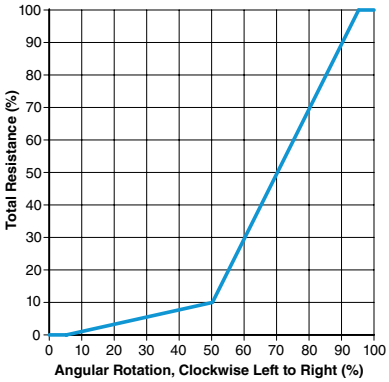

Linear: 10% to 40%; 57.5% to 82.5% (S-12)

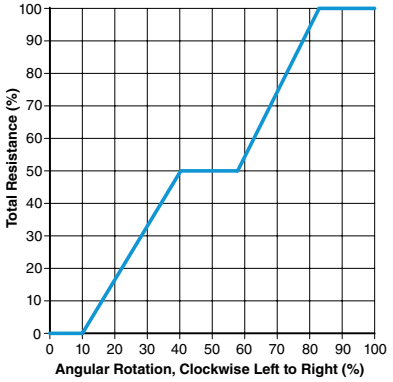

Linear: 10% to 45%; 55% to 90% (S-13)

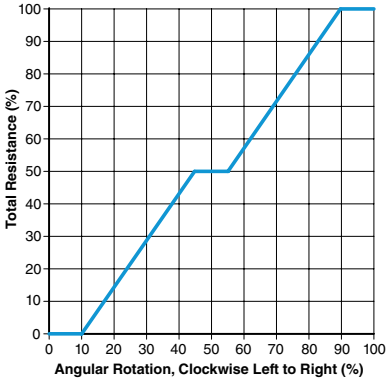

Linear: 35% to 45%; 55% to 65% (S-14)

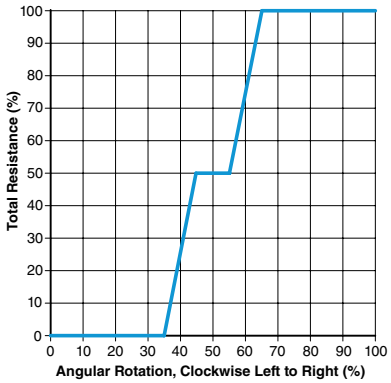

Linear: 45% to 47.5%; 47.5% to 52.5%; 52.5% to 55% (S-15)

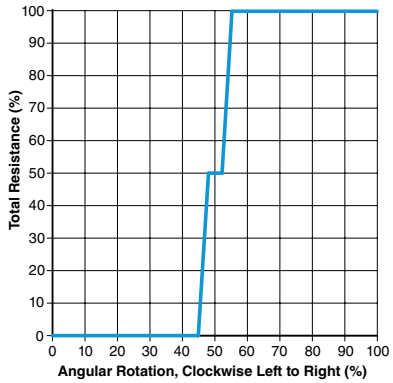

Linear: 5% to 40%; 45% to 52.5%; 60% to 95% (S-16)

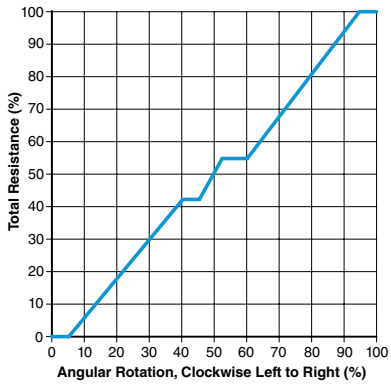

General Specifications

Figure 2. Power Derating Curve

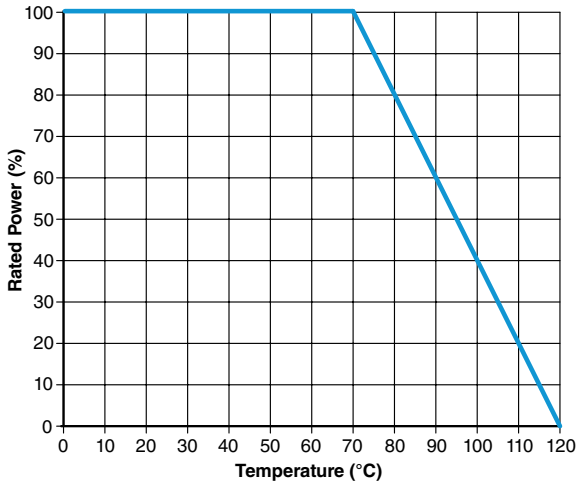

Figure 3. Mounting Hardware

Jam Nut	Mounting Nut	Lock Washer	O-Ring
7,94 mm [5/16 in] across flats 3,97 mm [5/32 in] thick	1/4 x 32 thread 7,94 mm [5/16 in] across flats	10,32 mm [5/16 in] outside diameter 0,64 mm [0.025 in] thick	6,35 mm [0.25 in] outside diameter 1,78 mm [0.070 in] thick
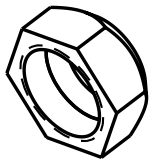	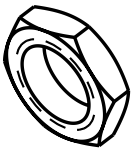		

General Configuration Guide

Figure 4. General Configuration Guide

This figure shows possible configurations. Not all combinations may be available, please contact Honeywell. See the Order Guides for each series on subsequent pages for currently available catalog listings.

Product Series

380 Series, RV4 Series, 485 Series, 53C Series, 385 Series
2 W Conductive Plastic Potentiometers

Bushing Type and Length

3/8-32 NEF-2A:
Standard:
6,35 mm [0.25 in]

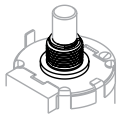

7,92 mm [0.312 in]

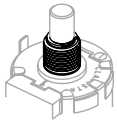

8,69 mm [0.342 in]

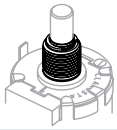

9,27 mm [0.365 in]

9,53 mm [0.375 in]

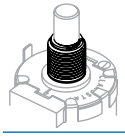

12,7 mm [0.500 in]

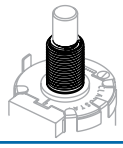

High Torque:
12,7 mm [0.500 in]

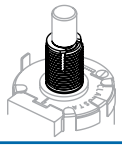

Custom

Switch

None

Shaft Type

Ø3,18 mm [0.125 in]:
Flatted

Round

Slotted

Straight Knurled

Custom

Shaft Length

9,53 mm [0.325][1]
12,7 mm [0.50 in][1]
15,88 mm [0.625 in]
19,05 mm [0.75 in]
22,23 mm [0.875 in]
31,75 mm [1.25 in]
50,8 mm [2.00 in]
63,5 mm [2.50 in]
Custom

[1]Applies to 6,25 mm [0.25 in] bushings only.

Resistance

Significant Digit	Number of Zeros that Follow
10 Ohm	0
15 Ohm	1
20 Ohm	2
25 Ohm	3
50 Ohm	4
	5

Electrical Taper

Linear:
2.5% to 97.5%
5% to 95%
7.5% to 92.5%
10% to 90%
15% to 95%
25% to 75%
35% to 65%
37.5% to 82.5%
42.5% to 57.5%
45% to 55%
5% to 50%; 50% to 90%
10% to 40%; 57.5% to 82.5%
10% to 45%; 55% to 90%
10% to 45%; 55% to 90%
35% to 45%; 55% to 65%;
45% to 57.5%; 52.5% to 55%;
5% to 40%; 45% to 52.5%; 60% to 95%
Log
Reverse Log
Custom

Anti-Rotation (AR) Locating Pin

No locating pins

One locating pin:
9 o' clock

3 o' clock

Two locating pins

Custom

Termination Type

Solder lug

Solder lug with center tap

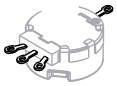

PC pin

Fast-on

Custom

General 380 Series, RV4 Series, 485 Series, 53C Series, 385 Series Terminology

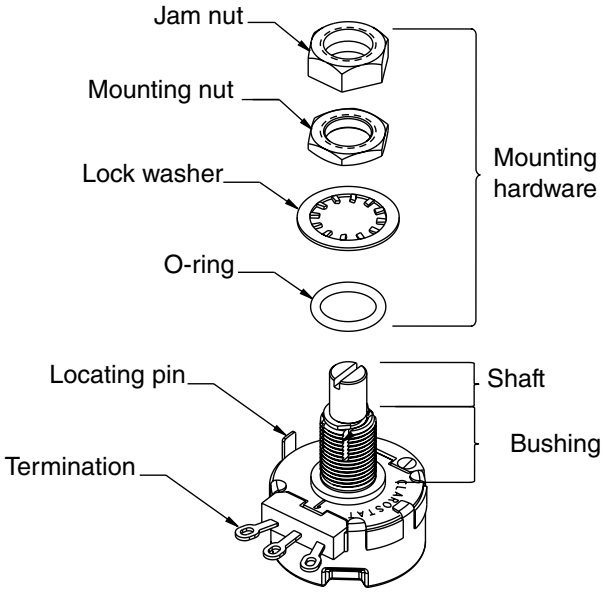

380 Series Specific Configurations

Table 5. 380 Series Specific Configurations

Shaft Type	Bushing Type	AR Pin	Termin-ation	Configuration with Associated Hardware
380-A (See Table 380-A on p. 9.)				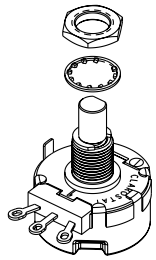
flatted	standard, 9,53 mm [0.375 in]	1	solder lug	
380-C (See Table 380-C on p. 10.)				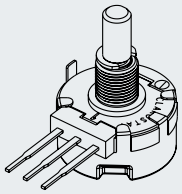
flatted	standard, 9,53 mm [0.375 in]	1	PC pin	
380-E (See Table 380-E on p. 12.)				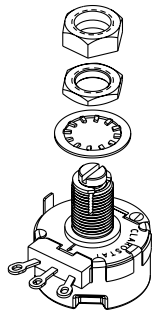
slotted	high torque, 12,7 mm [0.500 in]	1	solder lug	
380-G (See Table 380-G on p. 14.)				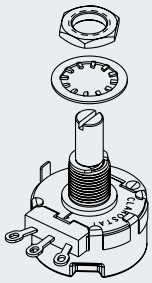
slotted	standard, 9,53 mm [0.375] in	1	solder lug	
380-I (See Table 380-I on p. 15.)				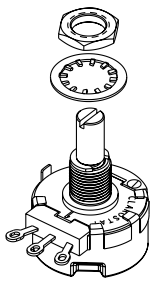
slotted	standard, 9,53 mm [0.375] in	2	solder lug	

Shaft Type	Bushing Type	AR Pin	Termin-ation	Configuration with Associated Hardware
380-B (See Table 380-B on p. 10.)				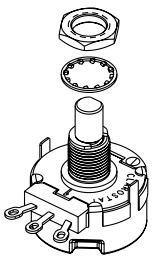
slotted	standard, 9,53 mm [0.375 in]	2	solder lug	
380-D (See Table 380-D on p. 11.)				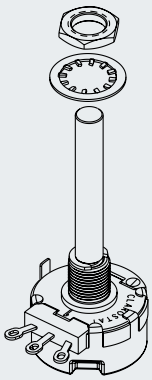
round	standard, 9,53 mm [0.375 in]	1	solder lug	
380-F (See Table 380-F on p. 13.)				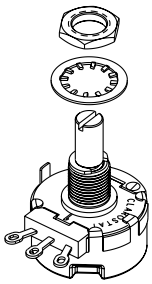
slotted	standard, 9,53 mm [0.375 in]	1	solder lug	
380-H (See Table 380-H on p. 14.)				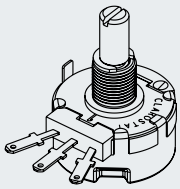
slotted	standard, 9,53 mm [0.375] in	1	fast-on	

380 Series Order Guides

Table 380-A Order Guide

Catalog Listing	Electrical							Mechanical				Dimensions				RoHS Compliant	Mounting Hardware
	Resistance (Ohm)	Resistance Tolerance (±%)	End Resistance at CW, Max. (Ohm)	End Resistance at CCW, Max. (Ohm)	Effective Electrical Rotation, Typ. (Degree)	Electrical Rotation, ±3 (Degree)	Taper	Mechanical Rotation (Degree)	Operating Torque (mN m [in-oz])	Stop Torque (N m [in-lb])	Shaft Seal	A Flat Length (mm [in])	B Flat Thickness (mm [in])	C Shaft Length (mm [in])	D Bushing Length (mm [in])		
380000M8629	1 k	10	4	4	274	312	S-4	312	1-4 [7-28]	12 [1.4]	no	7,95 [0.313]	5,54 [0.218]	19,46 [0.766]	9,53 [0.375]	yes	unassembled
380000M8630	2.5 k	10	4	4	274	312	S-4	312	1-4 [7-28]	12 [1.4]	no	7,95 [0.313]	5,54 [0.218]	19,46 [0.766]	9,53 [0.375]	yes	unassembled
380000M8643	1 k	10	4	4	274	312	S-4	312	1-4 [7-28]	12 [1.4]	no	14,30 [0.563]	5,54 [0.218]	25,4 [1.000]	9,53 [0.375]	yes	unassembled
380000M8682	50 k	10	4	4	274	312	S-4	312	1-4 [7-28]	12 [1.4]	no	7,95 [0.313]	5,54 [0.218]	19,46 [0.766]	9,53 [0.375]	yes	unassembled
380017M0007[1,2]	500	10	4	4	274	312	S-4	312	6 [7-42]	12 [1.4]	yes	7,95 [0.313]	5,54 [0.218]	22,23 [0.875]	9,53 [0.375]	no	unassembled
380017M8606	10 k	10	4	4	274	312	S-4	312	6 [7-42]	12 [1.4]	yes	7,95 [0.313]	5,54 [0.218]	19,05 [0.750]	9,53 [0.375]	yes	unassembled
380017M8768[1]	25 k	10	4	4	274	312	S-4	312	6 [7-42]	12 [1.4]	yes	7,95 [0.313]	5,54 [0.218]	19,05 [0.750]	9,53 [0.375]	yes	unassembled
380017M9550[1]	5 k	10	4	4	274	312	S-4	312	6 [7-42]	12 [1.4]	yes	7,95 [0.313]	5,54 [0.218]	19,05 [0.750]	9,53 [0.375]	yes	unassembled

Dimensional Drawings (For reference only: mm [in].)

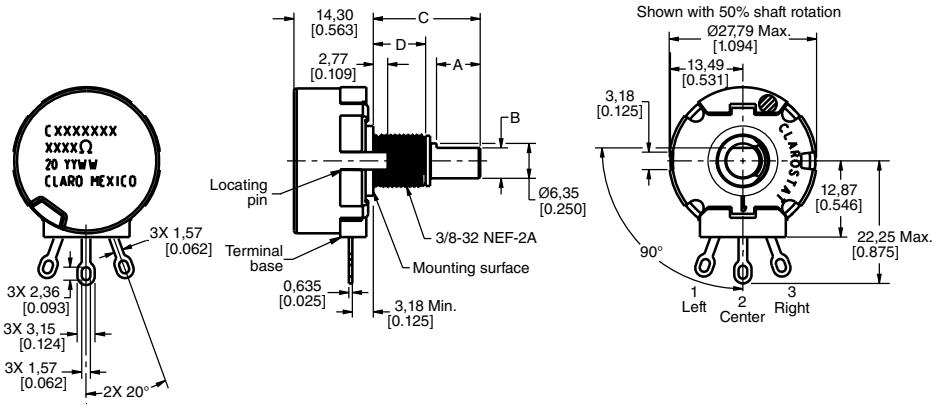

[1]Supplied with nickel-plated, phosphor bronze lock washer.
[2]Supplied with two mounting nuts.

380 Series Order Guides

Table 380-B Order Guide

Catalog Listing	Electrical							Mechanical				Dimensions				RoHS Compliant	Mounting Hardware
	Resistance (Ohm)	Resistance Tolerance (±%)	End Resistance at CW, Max. (Ohm)	End Resistance at CCW, Max. (Ohm)	Effective Electrical Rotation, Typ. (Degree)	Electrical Rotation, ±3 (Degree)	Taper	Mechanical Rotation (Degree)	Operating Torque (mN m [in-oz])	Stop Torque (N m [in-lb])	Shaft Seal	A Flat Length (mm [in])	B Flat Thickness (mm [in])	C Shaft Length (mm [in])	D Bushing Length (mm [in])		
3800017M8956	10 k	10	4	4	274	312	S-4	312	1-6 [7-42]	12 [1.4]	yes	7.95 [0.313]	5,54 [0.218]	19,05 [0.750]	9,53 [0.375]	yes	unassembled

Dimensional Drawings (For reference only: mm [in].)

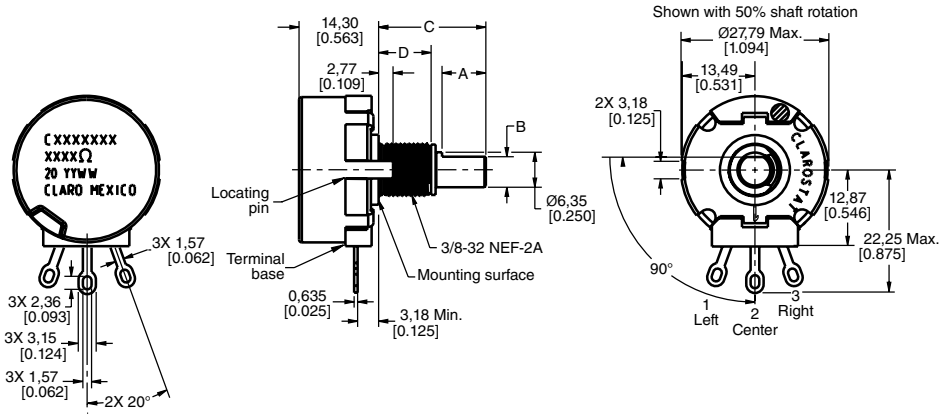

Table 380-C Order Guide

Catalog Listing	Electrical							Mechanical				Dimensions				RoHS Compliant	Mounting Hardware
	Resistance (Ohm)	Resistance Tolerance (±%)	End Resistance at CW, Max. (Ohm)	End Resistance at CCW, Max. (Ohm)	Effective Electrical Rotation, Typ. (Degree)	Electrical Rotation, ±3 (Degree)	Taper	Mechanical Rotation (Degree)	Operating Torque (mN m [in-oz])	Stop Torque (N m [in-lb])	Shaft Seal	A Flat Length (mm [in])	B Flat Thickness (mm [in])	C Shaft Length (mm [in])	D Bushing Length (mm [in])		
380096M9088	10 k	10	4	4	288	312	S-2	312	1-6 [7-42]	12 [1.4]	yes	9,53 [0.375]	5,54 [0.218]	22,23 [0.875]	9,27 [0.365]	yes	none

Dimensional Drawings (For reference only: mm [in].)

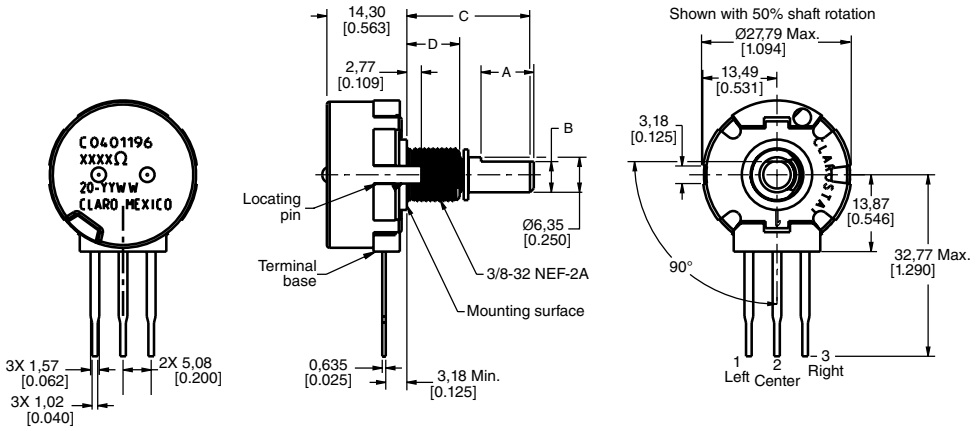

380 Series Order Guides

Table 380-D Order Guide

Catalog Listing	Electrical							Mechanical				Dimensions		RoHS Compliant	Mounting Hardware
	Resistance (Ohm)	Resistance Tolerance (±%)	End Resistance at CW, Max. (Ohm)	End Resistance at CCW, Max. (Ohm)	Effective Electrical Rotation, Typ. (Degree)	Electrical Rotation, ±3 (Degree)	Taper	Mechanical Rotation (Degree)	Operating Torque (mN m [in-oz])	Stop Torque (N m [in-lb])	Shaft Seal	A Shaft Length (mm [in])	B Bushing Length (mm [in])		
380C1100	100	10	4	4	274	312	S-4	312	1-4 [7-28]	12 [1.4]	no	50,8 [2.000]	9,53 [0.375]	yes	unassembled
380C11000	1000	10	4	4	274	312	S-4	312	1-4 [7-28]	12 [1.4]	no	50,8 [2.000]	9,53 [0.375]	yes	unassembled
380C1100K	100 k	10	4	4	274	312	S-4	312	1-4 [7-28]	12 [1.4]	no	50,8 [2.000]	9,53 [0.375]	yes	unassembled
380C110K	10 k	10	4	4	274	312	S-4	312	1-4 [7-28]	12 [1.4]	no	50,8 [2.000]	9,53 [0.375]	yes	unassembled
380C11MEG	1 M	10	10	10	274	312	S-4	312	1-4 [7-28]	12 [1.4]	no	50,8 [2.000]	9,53 [0.375]	yes	unassembled
380C12000	2 k	10	4	4	274	312	S-4	312	1-4 [7-28]	12 [1.4]	no	50,8 [2.000]	9,53 [0.375]	yes	unassembled
380C120K	20 k	10	4	4	274	312	S-4	312	1-4 [7-28]	12 [1.4]	no	50,8 [2.000]	9,53 [0.375]	no	unassembled
380C1250	250	10	4	4	274	312	S-4	312	1-4 [7-28]	12 [1.4]	no	50,8 [2.000]	9,53 [0.375]	yes	unassembled
380C12500	2.5 k	10	4	4	274	312	S-4	312	1-4 [7-28]	12 [1.4]	no	50,8 [2.000]	9,53 [0.375]	yes	unassembled
380C125K	25 k	10	4	4	274	312	S-4	312	1-4 [7-28]	12 [1.4]	no	50,8 [2.000]	9,53 [0.375]	yes	unassembled
380C135K	35 k	10	4	4	274	312	S-4	312	1-4 [7-28]	12 [1.4]	no	50,8 [2.000]	9,53 [0.375]	yes	unassembled
380C1500	500	10	4	4	274	312	S-4	312	1-4 [7-28]	12 [1.4]	no	50,8 [2.000]	9,53 [0.375]	yes	unassembled
380C15000	5 k	10	4	4	274	312	S-4	312	1-4 [7-28]	12 [1.4]	no	50,8 [2.000]	9,53 [0.375]	yes	unassembled
380C1500K	500 k	10	10	10	274	312	S-4	312	1-4 [7-28]	12 [1.4]	no	50,8 [2.000]	9,53 [0.375]	yes	unassembled
380C150K	50 k	10	4	4	274	312	S-4	312	1-4 [7-28]	12 [1.4]	no	50,8 [2.000]	9,53 [0.375]	yes	unassembled

Dimensional Drawings (For reference only: mm [in].)

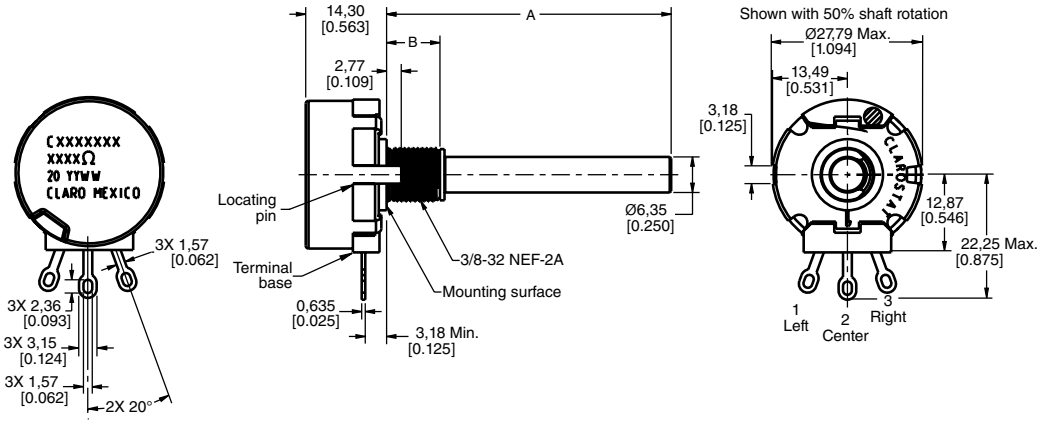

380 Series Order Guides

Table 380-E Order Guide

Catalog Listing	Electrical							Mechanical				Dimensions				RoHS Compliant	Mounting Hardware
	Resistance (Ohm)	Resistance Tolerance (±%)	End Resistance at CW, Max. (Ohm)	End Resistance at CCW, Max. (Ohm)	Effective Electrical Rotation, Typ. (Degree)	Electrical Rotation, ±3 (Degree)	Taper	Mechanical Rotation (Degree)	Operating Torque (mN m [in-oz])	Stop Torque (N m [in-lb])	Shaft Seal	A Slot Depth (mm [in])	B Slot Width (mm [in])	C Shaft Length (mm [in])	D Bushing Length (mm [in])		
380C2000	1 k	10	4	4	274	312	S-4	312	1-4 [7-28]	12 [1.4]	no	1,60 [0.063]	1,19 [0.047]	15,88 [0.625]	12,7 [0.500]	yes	unassembled
380C210K	10 k	10	4	4	274	312	S-4	312	1-4 [7-28	12 [1.4]	no	1,60 [0.063]	1,19 [0.047]	15,88 [0.625]	12,7 [0.500]	yes	unassembled
380C225K	25 k	10	4	4	274	312	S-4	312	1-4 [7-28]	12 [1.4]	no	1,60 [0.063]	1,19 [0.047]	15,88 [0.625]	12,7 [0.500]	yes	unassembled
380C25000	5 k	10	4	4	274	312	S-4	312	1-4 [7-28	12 [1.4]	no	1,60 [0.063]	1,19 [0.047]	15,88 [0.625]	12,7 [0.500]	yes	unassembled

Dimensional Drawings (For reference only: mm [in].)

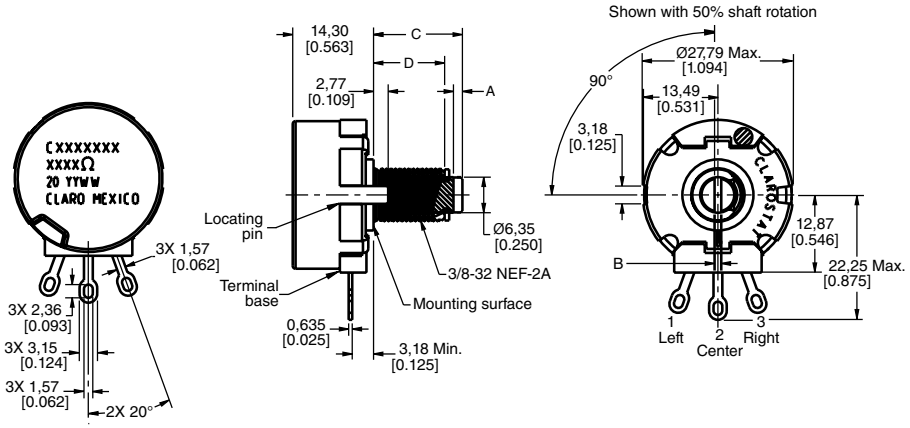

380 Series Order Guides

Table 380-F Order Guide

Catalog Listing	Electrical							Mechanical				Dimensions				RoHS Compliant	Mounting Hardware
	Resistance (Ohm)	Resistance Tolerance (±%)	End Resistance at CW, Max. (Ohm)	End Resistance at CCW, Max. (Ohm)	Effective Electrical Rotation, Typ. (Degree)	Electrical Rotation, ±3 (Degree)	Taper	Mechanical Rotation (Degree)	Operating Torque (mN m [in-oz])	Stop Torque (N m [in-lb])	Shaft Seal	A Slot Length (mm [in])	B Slot Width (mm [in])	C Shaft Length (mm [in])	D Bushing Length (mm [in])		
380C3100	100	10	4	4	274	312	S-4	312	1-4 [7-28]	12 [1.4]	no	1,60 [0.063]	1,19 [0.047]	22,23 [0.875]	9,53 [0.375]	yes	unassembled
380C31000	1 k	10	4	4	274	312	S-4	312	1-4 [7-28]	12 [1.4]	no	1,60 [0.063]	1,19 [0.047]	22,23 [0.875]	9,53 [0.375]	yes	unassembled
380C3100K	100 k	10	4	4	274	312	S-4	312	1-4 [7-28]	12 [1.4]	no	1,60 [0.063]	1,19 [0.047]	22,23 [0.875]	9,53 [0.375]	yes	unassembled
380C310K	10 k	10	4	4	274	312	S-4	312	1-4 [7-28]	12 [1.4]	no	1,60 [0.063]	1,19 [0.047]	22,23 [0.875]	9,53 [0.375]	yes	unassembled
380C31MEG	1 M	10	10	10	274	312	S-4	312	1-4 [7-28]	12 [1.4]	no	1,60 [0.063]	1,19 [0.047]	22,23 [0.875]	9,53 [0.375]	yes	unassembled
380C32000	2 k	10	4	4	274	312	S-4	312	1-4 [7-28]	12 [1.4]	no	1,60 [0.063]	1,19 [0.047]	22,23 [0.875]	9,53 [0.375]	yes	unassembled
380C3200K	200 k	10	4	4	274	312	S-4	312	1-4 [7-28]	12 [1.4]	no	1,60 [0.063]	1,19 [0.047]	22,23 [0.875]	9,53 [0.375]	no	unassembled
380C3250	250	10	4	4	274	312	S-4	312	1-4 [7-28]	12 [1.4]	no	1,60 [0.063]	1,19 [0.047]	22,23 [0.875]	9,53 [0.375]	no	unassembled
380C32500	2.5 k	10	4	4	274	312	S-4	312	1-4 [7-28]	12 [1.4]	no	1,60 [0.063]	1,19 [0.047]	22,23 [0.875]	9,53 [0.375]	yes	unassembled
380C3250K	250 k	10	10	10	274	312	S-4	312	1-4 [7-28]	12 [1.4]	no	1,60 [0.063]	1,19 [0.047]	22,23 [0.875]	9,53 [0.375]	yes	unassembled
380C325K	25 k	10	4	4	274	312	S-4	312	1-4 [7-28]	12 [1.4]	no	1,60 [0.063]	1,19 [0.047]	22,23 [0.875]	9,53 [0.375]	yes	unassembled
380C3500	500	10	4	4	274	312	S-4	312	1-4 [7-28]	12 [1.4]	no	1,60 [0.063]	1,19 [0.047]	22,23 [0.875]	9,53 [0.375]	yes	unassembled
380C35000	5 k	10	4	4	274	312	S-4	312	1-4 [7-28]	12 [1.4]	no	1,60 [0.063]	1,19 [0.047]	22,23 [0.875]	9,53 [0.375]	yes	unassembled
380C3500K	500 k	10	10	10	274	312	S-4	312	1-4 [7-28]	12 [1.4]	no	1,60 [0.063]	1,19 [0.047]	22,23 [0.875]	9,53 [0.375]	yes	unassembled
380C350K	50 k	10	4	4	274	312	S-4	312	1-4 [7-28]	12 [1.4]	no	1,60 [0.063]	1,19 [0.047]	22,23 [0.875]	9,53 [0.375]	yes	unassembled

Dimensional Drawings (For reference only: mm [in].)

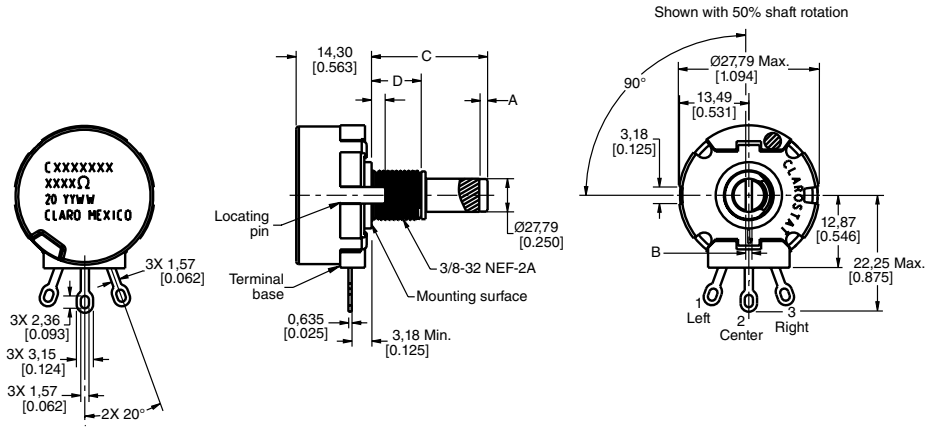

380 Series Order Guides

Table 380-G Order Guide

Catalog Listing	Electrical							Mechanical				Dimensions				RoHS Compliant	Mounting Hardware
	Resistance (Ohm)	Resistance Tolerance (±%)	End Resistance at CW, Max. (Ohm)	End Resistance at CCW, Max. (Ohm)	Effective Electrical Rotation, Typ. (Degree)	Electrical Rotation, ±3 (Degree)	Taper	Mechanical Rotation (Degree)	Operating Torque (mN m [in-oz])	Stop Torque (N m [in-lb])	Shaft Seal	A Slot Depth (mm [in])	B Slot Width (mm [in])	C Shaft Length (mm [in])	D BusingLength (mm [in])		
380000074850005 8	500 k	10	5	10	274	312	Z	312	1-6 [7-42]	12 [1.4]	no	1,60 [0.063]	1,19 [0.047]	22,23 [0.875]	9,53 [0.375]	yes	unassembled
380101M9699[1,2]	2.5 M	10	25	10	274	312	Z	312	1-6 [7-42]	12 [1.4]	yes	1,60 [0.063]	1,19 [0.047]	22,23 [0.875]	9,53 [0.375]	yes	unassembled

Dimensional Drawings (For reference only: mm [in].)

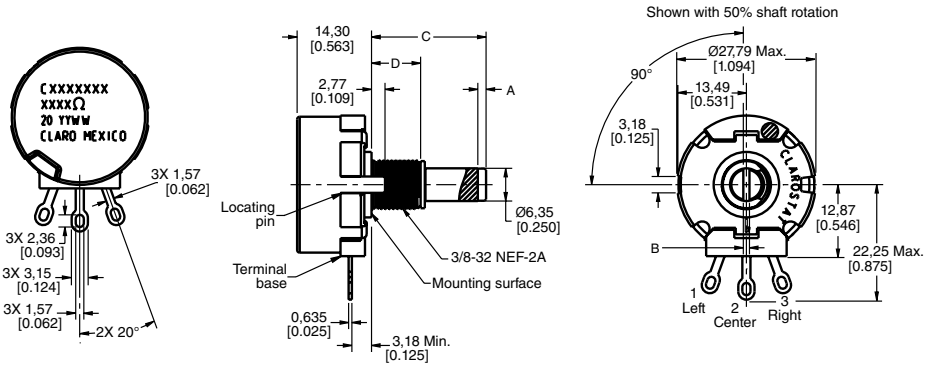

[1]Supplied with stainless-steel shaft.
[2]Supplied with nickel-plated beryllium copper retaining ring.

Table 380-H Order Guide

Catalog Listing	Electrical							Mechanical				Dimensions				RoHS Compliant	Mounting Hardware
	Resistance (Ohm)	Resistance Tolerance (±%)	End Resistance at CW, Max. (Ohm)	End Resistance at CCW, Max. (Ohm)	Effective Electrical Rotation, Typ. (Degree)	Electrical Rotation, ±3 (Degree)	Taper	Mechanical Rotation (Degree)	Operating Torque (mN m [in-oz])	Stop Torque (N m [in-lb])	Shaft Seal	A Slot Length (mm [in])	B Slot Width (mm [in])	C Shaft Length (mm [in])	D Bushing Length (mm [in])		
380099M9425	1 k	10	4	4	288	312	S-2	312	6-20 [42-141]	12 [1.4]	no	1,60 [0.063]	1,19 [0.047]	22,23 [0.875]	9,53 [0.375]	yes	unassembled

Dimensional Drawings (For reference only: mm [in].)

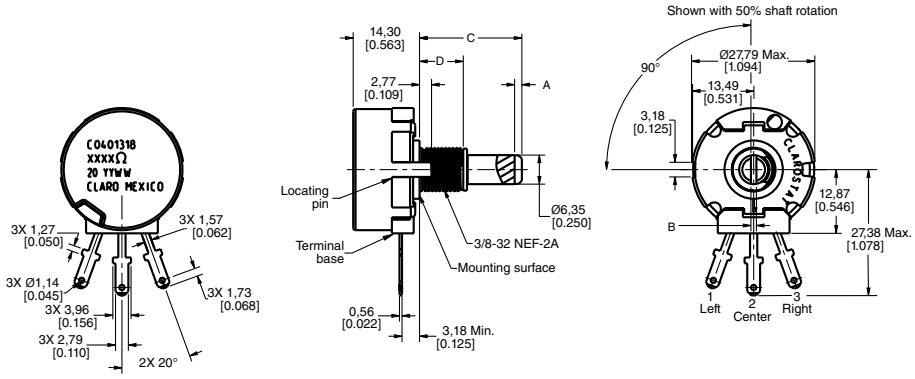

380 Series Order Guides

Table 380-I Order Guide

Catalog Listing	Electrical							Mechanical				Dimensions				RoHS Compliant	Mounting Hardware
	Resistance (Ohm)	Resistance Tolerance (±%)	End Resistance at CW, Max. (Ohm)	End Resistance at CCW, Max. (Ohm)	Effective Electrical Rotation, Typ. (Degree)	Electrical Rotation, ±3 (Degree)	Taper	Mechanical Rotation (Degree)	Operating Torque (mN m [in-oz])	Stop Torque (N m [in-lb])	Shaft Seal	A Slot Depth (mm [in])	B Slot Width (mm [in])	C Shaft Length (mm [in])	D Bushing Length (mm [in])		
380036M7444	1 k	10	4	4	310	344	S-3	360	1-4 [7-28]	12 [1.4]	no	1,60 [0.063]	1,19 [0.047]	22,23 [0.875]	9,53 [0.375]	yes	unassembled

Dimensional Drawings (For reference only: mm [in].)

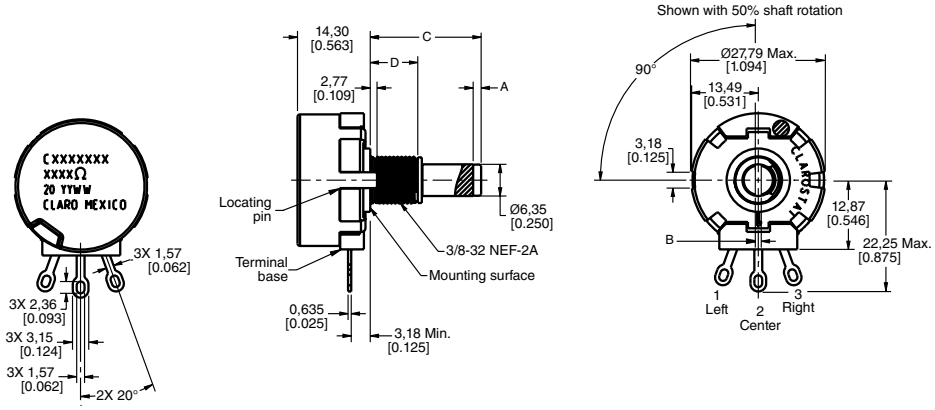

RV4 Series Specific Configurations

Table 6. RV4 Series Specific Configurations

Shaft Type	Bushing Type	AR Pin	Termin-ation	Configuration with Associated Hardware	Shaft Type	Bushing Type	AR Pin	Termin-ation	Configuration with Associated Hardware
RV4-A (See Table RV4-A on p. 17.)					RV4-B (See Table RV4-B on p. 18.)				
slotted	high torque, 12,7 mm [0.500 in]	1	solder lug	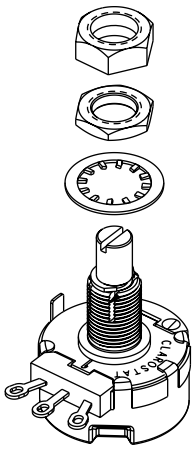	slotted	standard, 9,53 mm [0.375 in]	1	solder lug	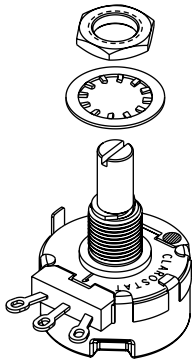

RV4 Series Order Guides

Table RV4-A Order Guide

Catalog Listing	Electrical							Mechanical				Dimensions		RoHS Compliant	Mounting Hardware
	Resistance (Ohm)	Resistance Tolerance (±%)	End Resistance at CW, Max. (Ohm)	End Resistance at CCW, Max. (Ohm)	Effective Electrical Rotation, Typ. (Degree)	Electrical Rotation, ±3 (Degree)	Taper	Mechanical Rotation (Degree)	Operating Torque (mN m [in-oz])	Stop Torque (N m [in-lb])	Shaft Seal	A Shaft Length (mm [in])	B Bushing Length (mm [in])		
RV4LAYSD102A	1 k	10	4	4	274	312	S-4	312	1-6 [7-42]	12 [1.4]	no	22,23 [0.875]	12,7 [0.500]	no	unassembled
RV4LAYSD103A	10 k	10	4	4	274	312	S-4	312	1-6 [7-42]	12 [1.4]	no	22,23 [0.875]	12,7 [0.500]	no	unassembled
RV4LAYSD104A	100 k	10	4	4	274	312	S-4	312	1-6 [7-42]	12 [1.4]	no	22,23 [0.875]	12,7 [0.500]	no	unassembled
RV4LAYSD502A	5 k	10	4	4	274	312	S-4	312	1-6 [7-42]	12 [1.4]	no	22,23 [0.875]	12,7 [0.500]	no	unassembled
RV4LAYSD504A	500 k	10	10	10	274	312	S-4	312	1-6 [7-42]	12 [1.4]	no	22,23 [0.875]	12,7 [0.500]	no	unassembled

Dimensional Drawings (For reference only: mm [in].)

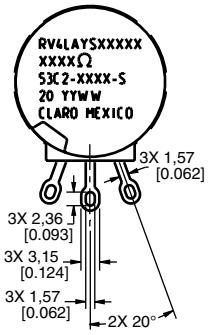

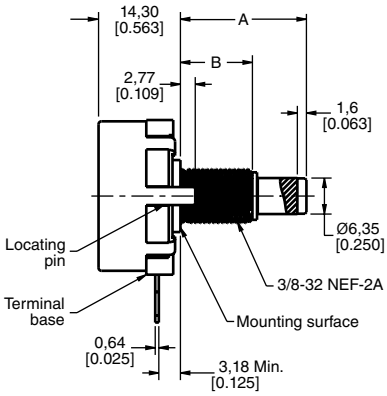

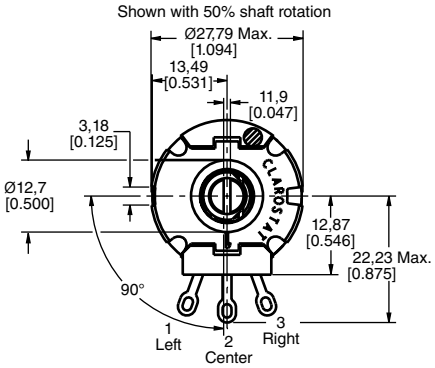

RV4 Series Order Guides

Table RV4-B Order Guide

Catalog Listing	Electrical							Mechanical				Dimensions		RoHS Compliant	Mounting Hardware
	Resistance (Ohm)	Resistance Tolerance (±%)	End Resistance at CW, Max. (Ohm)	End Resistance at CCW, Max. (Ohm)	Effective Electrical Rotation, Typ. (Degree)	Electrical Rotation, ±3 (Degree)	Taper	Mechanical Rotation (Degree)	Operating Torque (mN m [in-oz])	Stop Torque (N m [in-lb])	Shaft Seal	A Shaft Length (mm [in])	B Bushing Length (mm [in])		
RV4NAYSB101A	100	10	4	4	274	312	S-4	312	1-6 [7-42]	12 [1.4]	yes	12,7 [0.500]	9,53 [0.375]	no	unassembled
RV4NAYSB103A	10 k	10	4	4	274	312	S-4	312	1-6 [7-42]	12 [1.4]	yes	12,7 [0.500]	9,53 [0.375]	no	unassembled
RV4NAYSB503A	50 k	10	4	4	274	312	S-4	312	1-6 [7-42]	12 [1.4]	yes	12,7 [0.500]	9,53 [0.375]	no	unassembled
RV4NAYSK103A	10 k	10	4	4	274	312	S-4	312	1-6 [7-42]	12 [1.4]	yes	63,5 [2.500]	9,53 [0.375]	no	unassembled
RV4NAYSK502A	5 k	10	4	4	274	312	S-4	312	1-6 [7-42]	12 [1.4]	yes	63.5 [2.5,0]	9,53 [0.375]	no	unassembled
RV4SAYSD502A	5	10	-	-	274	312	S-4	312	1-6 [7-42]	12 [1.4]	yes	22,23 [0.875]	9,53 [0.375]	no	unassembled
RV4NAYSD503D	50 k	20	500	4	274	312	Z	312	1-6 [7-42]	12 [1.4]	yes	22,23 [0.875]	9,53 [0.375]	no	unassembled

Dimensional Drawings (For reference only: mm [in].)

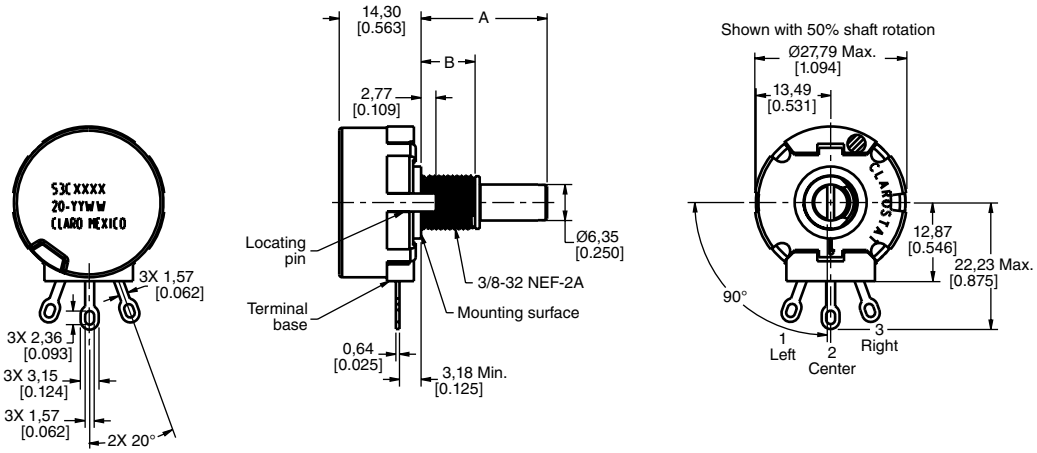

485 Series Specific Configurations

Table 7. 485 Series Specific Configurations

Shaft Type	Bushing Type	AR Pin	Termin-ation	Configuration with Associated Hardware
485-A (See Table 485-A on p. 22)				
flatted	standard, 9,53 mm [0.375 in]	1	solder lug	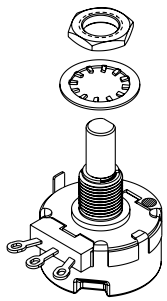
485-B (See Table 485-B on p. 22.)				
flatted	standard, 9,53 mm [0.375 in]	1	solder lug with center tap	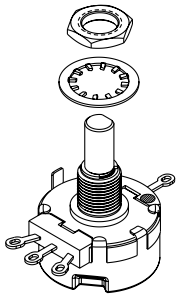
485-C (See Table 485-C on p. 23.)				
round	standard, 6,35 mm [0.250 in]	1	solder lug with center tap	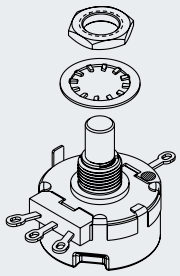
485-D (See Table 485-D on p. 23.)				
round	standard, 9,53 mm [0.375 in]	1	solder lug	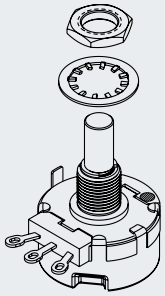
485-E (See Table 485-E on p. 24.)				
round	standard, 9,53 mm [0.375 in]	1	solder lug	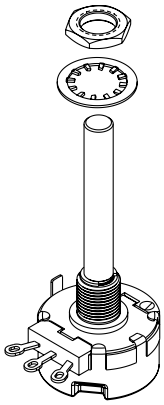
485-F (See Table 485-F on p. 24.)				
round	standard, 9,53 mm [0.375 in]	1	solder lug	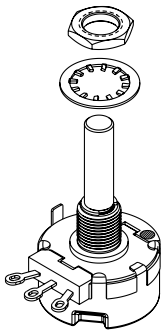
485-G (See Table 485-G on p. 25.)				
round	standard, 9,53 mm [0.375 in]	1	solder lug	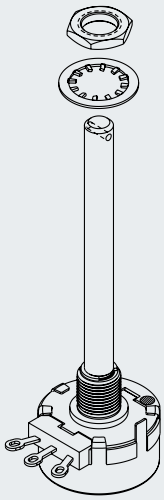
485-H (See Table 485-H on p. 25.)				
slotted	standard, 9,53 mm [0.375 in]	1	solder lug with center tap	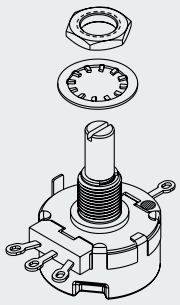

485 Series Specific Configurations

Table 7. 485 Series Specific Configurations (continued)

Shaft Type	Bushing Type	AR Pin	Termin-ation	Configuration with Associated Hardware
485-I (See Table 485-I on p. 26.)				
slotted	standard, 6,35 mm [0.250 in] and 9,53 mm [0.375 in]	1	solder lug	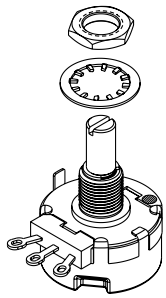
485-J (See Table 485-J on p. 26.)				
slotted	standard, 8,69 mm [0.342 in]	0	solder lug	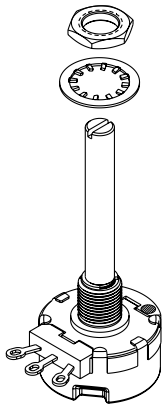
485-K (See Table 485-K on p. 27.)				
slotted	standard, 9,53 mm [0.375 in]	1	solder lug	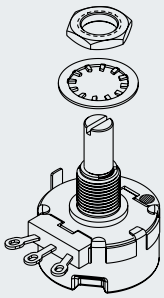
485-L (See Table 485-L on p. 27.)				
slotted	standard, 9,53 mm [0.375 in]	1	solder lug	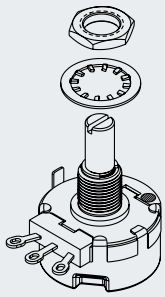
485-M (See Table 485-M on p. 28.)				
slotted	standard, 7,9 mm [0.312 in]	1	solder lug	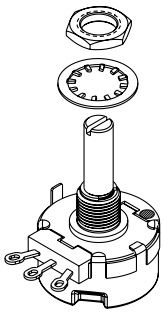
485-N (See Table 485-N on p. 28.)				
slotted	standard, 9,53 mm [0.375 in] and 12,7 mm [0.500 in]	1	solder lug	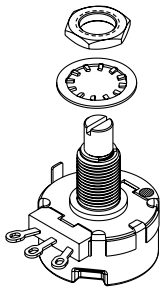
485-O (See Table 485-O on p. 29.)				
slotted	standard, 12,7 mm [0.500 in]	1	solder lug	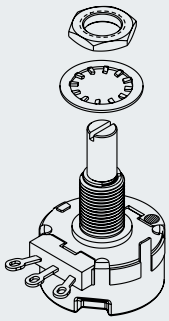
485-P (See Table 485-P on p. 29.)				
slotted	standard, 9,53 mm [0.375 in]	1	solder lug	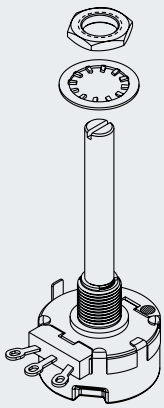

485 Series Specific Configurations

Table 7. 485 Series Specific Configurations (continued)

Shaft Type	Bushing Type	AR Pin	Termin-ation	Configuration with Associated Hardware	Shaft Type	Bushing Type	AR Pin	Termin-ation	Configuration with Associated Hardware
485-Q (See Table 485-Q on p. 30.)					**485-R (See Table 485-R on p. 30.)**				
slotted	standard, 9,53 mm [0.375 in]	1	solder lug with center tap	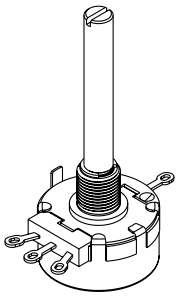	round	standard, 9,53 mm [0.375 in]	1	solder lug	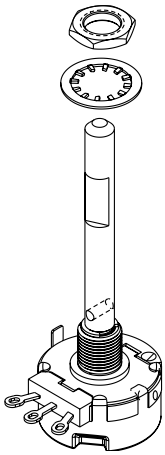
485-S (See Table 485-S on p. 31.)					**485-T (See Table 485-T on p. 31)**				
slotted	standard, 12,7 mm [0.500 in]	1	solder lug	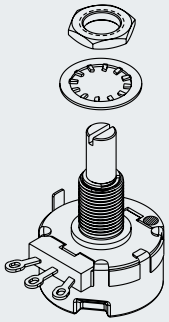	straight knurled	standard, 8,67 mm [0.342 in]	1	solder lug	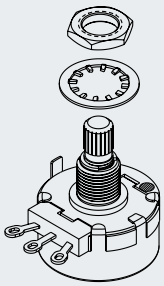

485 Series Order Guides

Table 485-A Order Guide

Catalog Listing	Electrical							Mechanical				Dimensions				RoHS Compliant	Mounting Hardware
	Resistance (Ohm)	Resistance Tolerance (±%)	End Resistance at CW, Max. (Ohm)	End Resistance at CCW, Max. (Ohm)	Effective Electrical Rotation, Typ. (Degree)	Electrical Rotation, ±3 (Degree)	Taper	Mechanical Rotation (Degree)	Operating Torque (mN m [in-oz])	Stop Torque (N m [in-lb])	Shaft Seal	A Flat Length (mm [in])	B Flat Thickness (mm [in])	C Shaft Length (mm [in])	D Bushing Length (mm [in])		
485000M8990	5 k	10	4	4	112	312	S-7	312	1-4 [7-28]	12 [1-4]	no	11,13 [0.438]	5,54 [0.218]	22,23 [0.875]	9,53 [0.375]	yes	unassembled

Dimensional Drawings (For reference only: mm [in].)

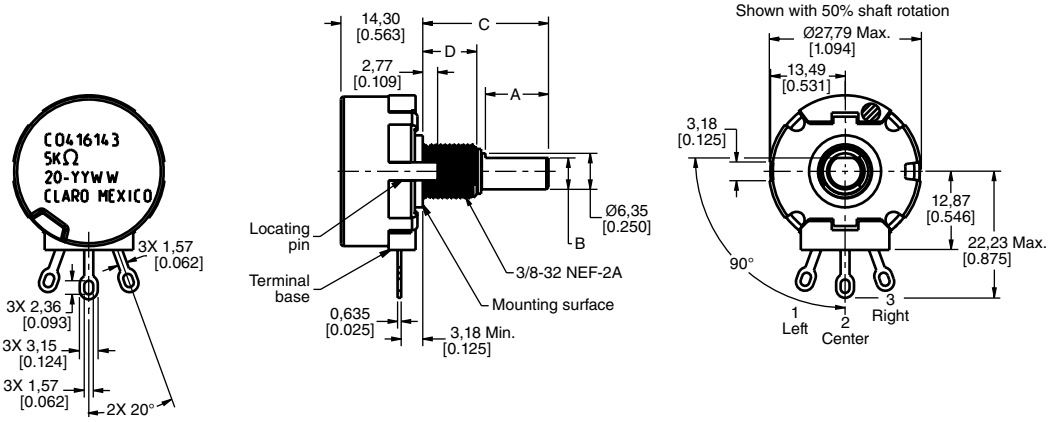

Table 485-B Order Guide

Catalog Listing	Electrical							Mechanical				Dimensions				RoHS Compliant	Mounting Hardware
	Resistance (Ohm)	Resistance Tolerance (±%)	End Resistance at CW, Max. (Ohm)	End Resistance at CCW, Max. (Ohm)	Effective Electrical Rotation, Typ. (Degree)	Electrical Rotation, ±3 (Degree)	Taper	Mechanical Rotation (Degree)	Operating Torque (mN m [in-oz])	Stop Torque (N m [in-lb])	Shaft Seal	A Flat Length (mm [in])	B Flat Thickness (mm [in])	C Shaft Length (mm [in])	D Bushing Length (mm [in])		
485025M9052	10 k	10	4	4	112	312	S-9	312	S-14	12	no	11,13 [0.438]	5,54 [0.218]	22,23 [0.875]	9,53 [0.375]	yes	unassembled

Dimensional Drawings (For reference only: mm [in].)

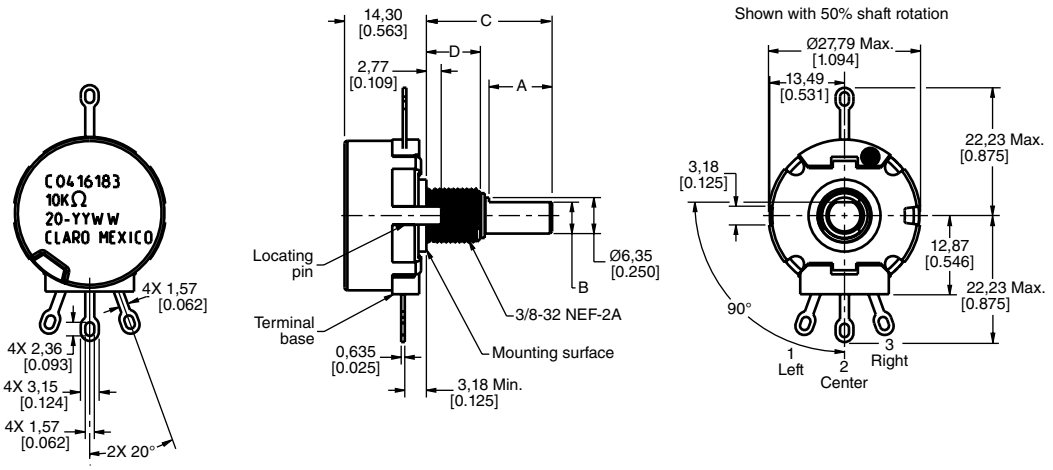

485 Series Order Guides

Table 485-C Order Guide

Catalog Listing	Electrical							Mechanical				Dimensions		RoHS Compliant	Mounting Hardware
	Resistance (Ohm)	Resistance Tolerance (±%)	End Resistance at CW, Max. (Ohm)	End Resistance at CCW, Max. (Ohm)	Effective Electrical Rotation, Typ. (Degree)	Electrical Rotation, ±3 (Degree)	Taper	Mechanical Rotation (Degree)	Operating Torque (mN m [in-oz])	Stop Torque (N m [in-lb])	Shaft Seal	A Shaft Length (mm [in])	B Bushing Length (mm [in])		
485025M8843	10 k	10	4	4	112	312	S-13	312	1-4 [7-28]	12 [1.4]	no	15,88 [0.625]	6,35 [0.250]	yes	unassembled
485025M9267	5 k	10	4	4	112	312	S-13	312	1-4 [7-28]	12 [1.4]	no	15,88 [0.625]	6,35 [0.250]	yes	unassembled

Dimensional Drawings (For reference only: mm [in].)

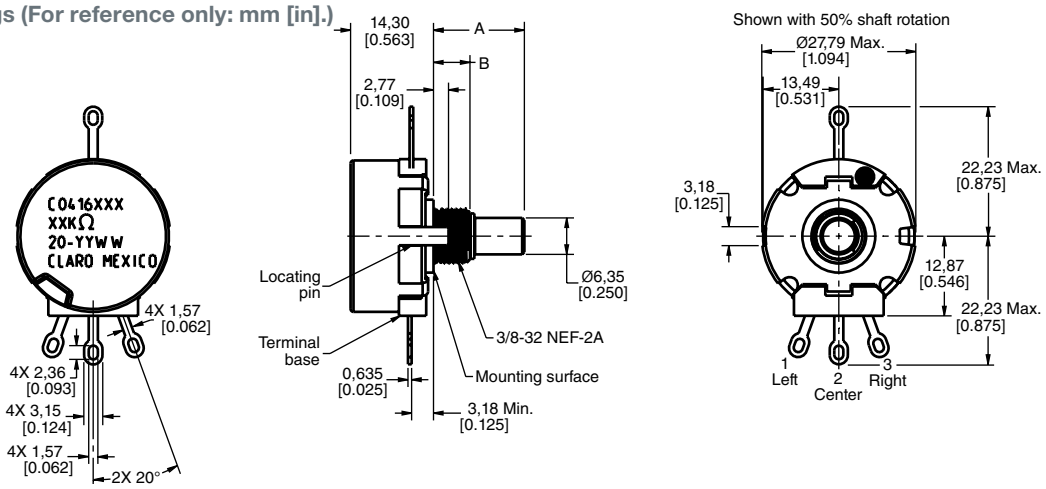

Table 485-D Order Guide

Catalog Listing	Electrical							Mechanical				Dimensions		RoHS Compliant	Mounting Hardware
	Resistance (Ohm)	Resistance Tolerance (±%)	End Resistance at CW, Max. (Ohm)	End Resistance at CCW, Max. (Ohm)	Effective Electrical Rotation, Typ. (Degree)	Electrical Rotation, ±3 (Degree)	Taper	Mechanical Rotation (Degree)	Operating Torque (mN m [in-oz])	Stop Torque (N m [in-lb])	Shaft Seal	A Shaft Length (mm [in])	B Bushing Length (mm [in])		
485008M7167	5 k	10	4	4	284	312	S-4	312	1-6 [7-42]	12 [1.4]	yes	22,23 [0.875]	9,53 [0.375]	yes	unassembled

Dimensional Drawings (For reference only: mm [in].)

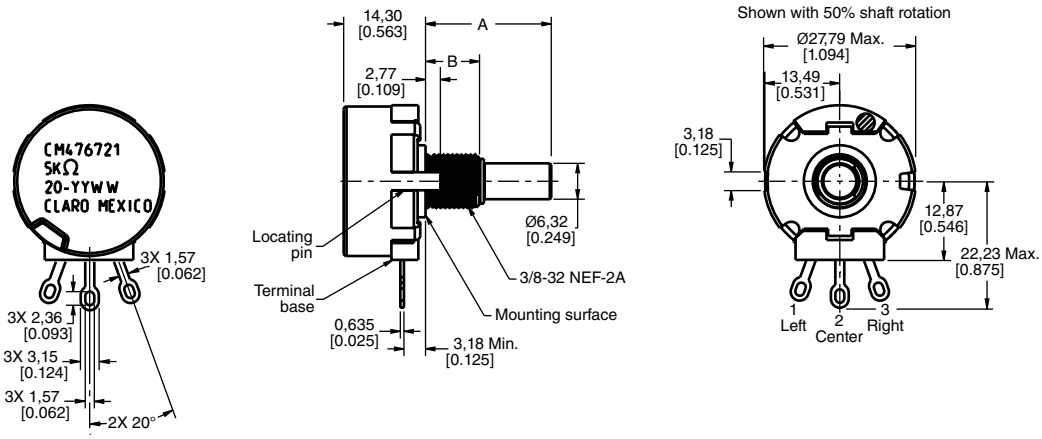

485 Series Order Guides

Table 485-E Order Guide

Catalog Listing	Electrical							Mechanical				Dimensions		RoHS Compliant	Mounting Hardware
	Resistance (Ohm)	Resistance Tolerance (±%)	End Resistance at CW, Max. (Ohm)	End Resistance at CCW, Max. (Ohm)	Effective Electrical Rotation, Typ. (Degree)	Electrical Rotation, ±3 (Degree)	Taper	Mechanical Rotation (Degree)	Operating Torque (mN m [in-oz])	Stop Torque (N m [in-lb])	Shaft Seal	A Shaft Length (mm [in])	B Bushing Length (mm [in])		
485000M8930	5 k	10	4	4	284	312	S-16	312	1-4 [7-28]	12 [1.4]	no	50,8 [2.000]	9,53 [0.375]	yes	unassembled

Dimensional Drawings (For reference only: mm [in].)

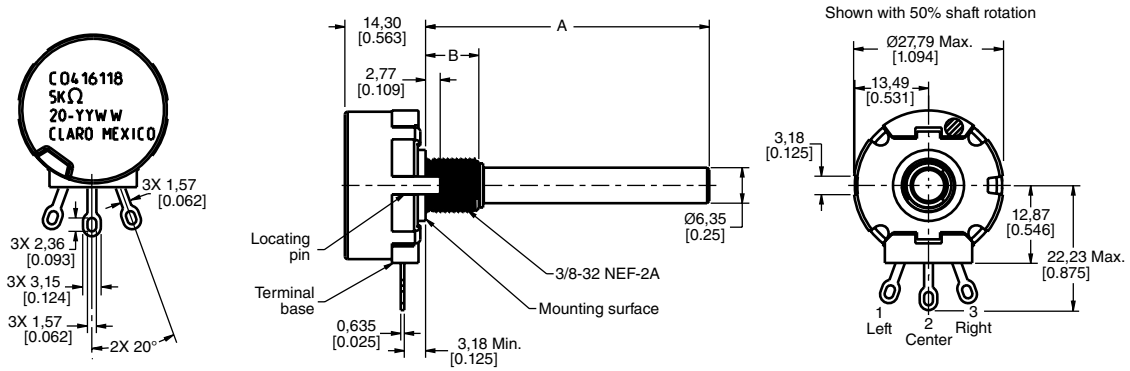

Table 485-F Order Guide

Catalog Listing	Electrical							Mechanical				Dimensions		RoHS Compliant	Mounting Hardware
	Resistance (Ohm)	Resistance Tolerance (±%)	End Resistance at CW, Max. (Ohm)	End Resistance at CCW, Max. (Ohm)	Effective Electrical Rotation, Typ. (Degree)	Electrical Rotation, ±3 (Degree)	Taper	Mechanical Rotation (Degree)	Operating Torque (mN m [in-oz])	Stop Torque (N m [in-lb])	Shaft Seal	A Shaft Length (mm [in])	B Bushing Length (mm [in])		
485000M9156	10 k	10	4	100	284	312	S-11	312	1-4 [7-28]	12 [1.4]	no	31,75 [1.250]	9,53 [0.375]	yes	unassembled

Dimensional Drawings (For reference only: mm [in].)

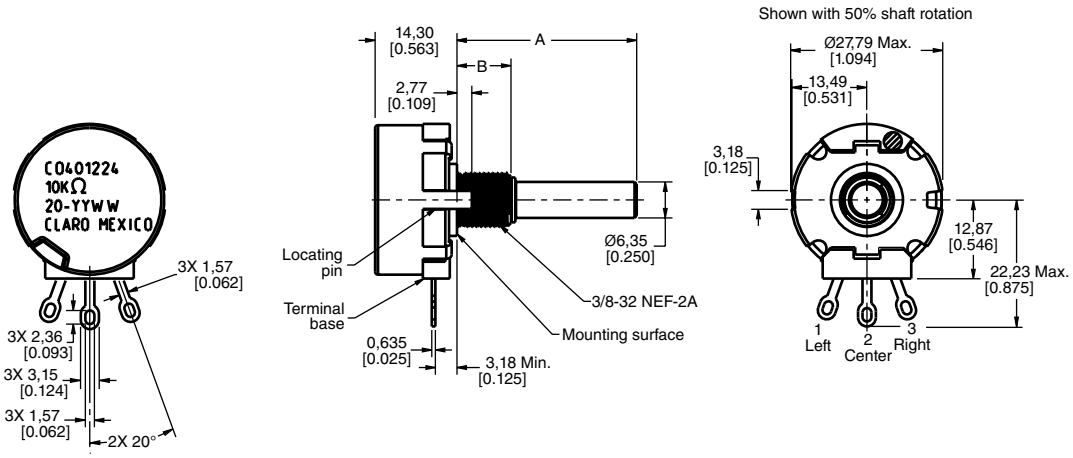

485 Series Order Guides

Table 485-G Order Guide

8.5	Electrical							Mechanical				Dimensions		RoHS Compliant	Mounting Hardware
	Resistance (Ohm)	Resistance Tolerance (±%)	End Resistance at CW, Max. (Ohm)	End Resistance at CCW, Max. (Ohm)	Effective Electrical Rotation, Typ. (Degree)	Electrical Rotation, ±3 (Degree)	Taper	Mechanical Rotation (Degree)	Operating Torque (mN m [in-oz])	Stop Torque (N m [in-lb])	Shaft Seal	A Shaft Length (mm [in])	B Bushing Length (mm [in])		
485004M8986	25 k	10	4	4	180	348	S-6	360	1-4 [7-28]	-	no	76,2 [3.000]	9,53 [0.375]	yes	unassembled

Dimensional Drawings (For reference only: mm [in].)

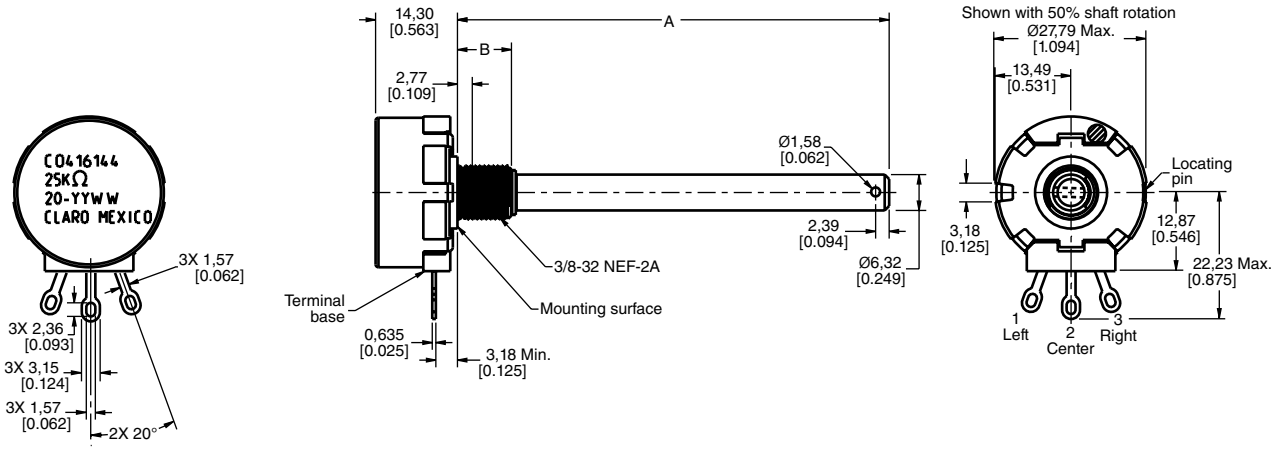

Table 485-H Order Guide

Catalog Listing	Electrical							Mechanical				Dimensions				RoHS Compliant	Mounting Hardware
	Resistance (Ohm)	Resistance Tolerance (±%)	End Resistance at CW, Max. (Ohm)	End Resistance at CCW, Max. (Ohm)	Effective Electrical Rotation, Typ. (Degree)	Electrical Rotation, ±3 (Degree)	Taper	Mechanical Rotation (Degree)	Operating Torque (mN m [in-oz])	Stop Torque (N m [in-lb])	Shaft Seal	A Slot Length (mm [in])	B Slot Width (mm [in])	C Shaft Length (mm [in])	D Bushing Length (mm [in])		
485025M9428	10 k	10	4	4	263	312	S-8	312	1-6 [7-42]	12 [1.4]	no	1,60 [0.063]	1,19 [0.047]	22,23 [0.875]	9,53 [0.375]	yes	unassembled
485042M9576	1 k	10	4	4	263	312	S-8	312	1-6 [7-42]	12 [1.4]	no	1,60 [0.063]	1,19 [0.047]	22,23 [0.875]	9,53 [0.375]	yes	unassembled

Dimensional Drawings (For reference only: mm [in].)

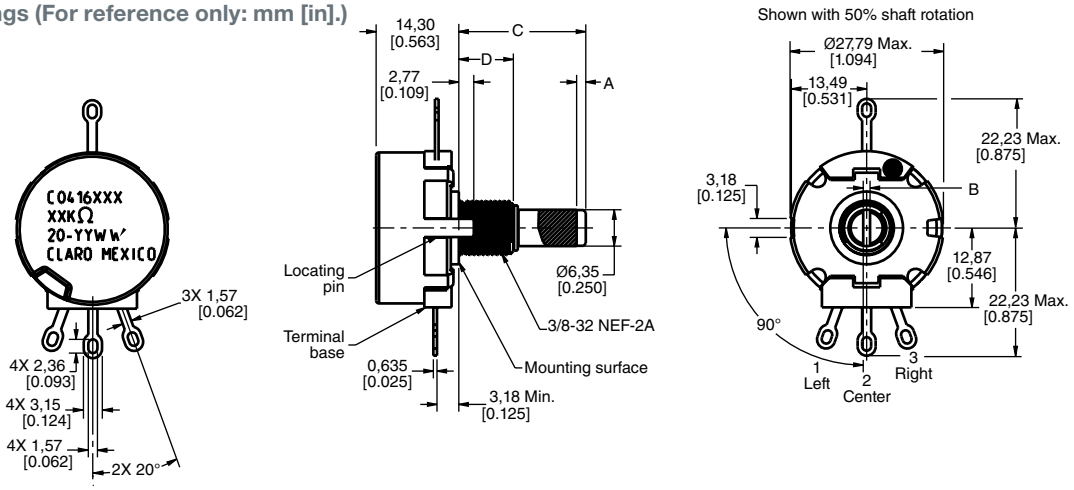

485 Series Order Guides

Table 485-I Order Guide

Catalog Listing	Electrical							Mechanical				Dimensions				RoHS Compliant	Mounting Hardware
	Resistance (Ohm)	Resistance Tolerance (±%)	End Resistance at CW, Max. (Ohm)	End Resistance at CCW, Max. (Ohm)	Effective Electrical Rotation, Typ. (Degree)	Electrical Rotation, ±3 (Degree)	Taper	Mechanical Rotation (Degree)	Operating Torque (mN m [in-oz])	Stop Torque (N m [in-lb])	Shaft Seal	A Slot Length (mm [in])	B Depth Width (mm [in])	C Shaft Length (mm [in])	D Bushing Length (mm [in])		
485000M8723	5 k	10	4	4	284	312	S-9	312	1-4 [1-28]	12 [1.4]	no	1,60 [0.063]	1,19 [0.047]	22,23 [0.875]	9,53 [0.375]	yes	unassembled
485000M9564	50 k	10	4	4	284	312	S-9	312	1-4 [1-28]	12 [1.4]	no	1,60 [0.063]	1,19 [0.047]	22,23 [0.875]	9,53 [0.75]	yes	unassembled
485000M9641	10 k	10	4	4	284	312	S-9	312	1-4 [1-28]	12 [1.4]	no	1,60 [0.063]	1,19 [0.047]	22,23 [0.875]	9,53 [0.375]	yes	unassembled
485000M9708	1 k	10	4	4	284	312	S-9	312	1-4 [1-28]	12 [1.4]	no	1,60 [0.063]	1,19 [0.047]	15,88 [0.625]	6,35 [0.250]	yes	unassembled

Dimensional Drawings (For reference only: mm [in].)

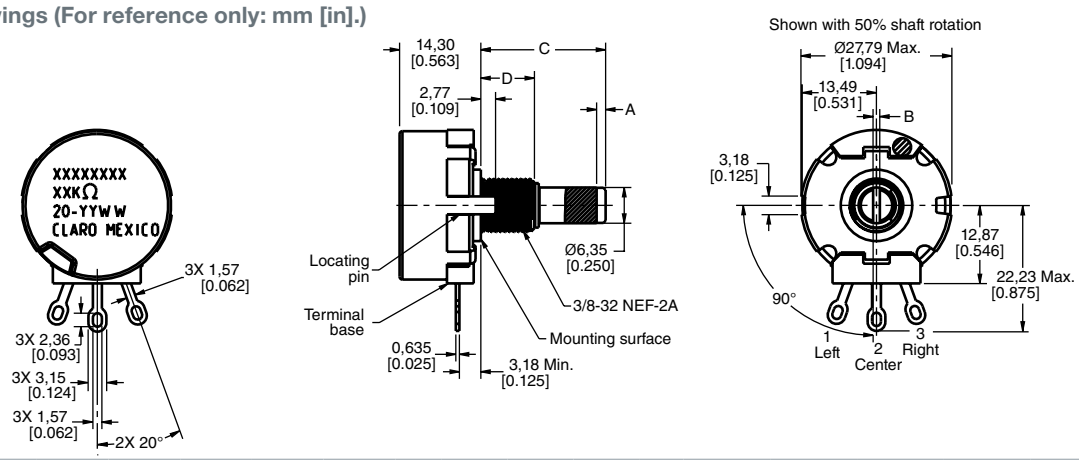

Table 485-J Order Guide

Catalog Listing	Electrical							Mechanical				Dimensions				RoHS Compliant	Mounting Hardware
	Resistance (Ohm)	Resistance Tolerance (±%)	End Resistance at CW, Max. (Ohm)	End Resistance at CCW, Max. (Ohm)	Effective Electrical Rotation, Typ. (Degree)	Electrical Rotation, ±3 (Degree)	Taper	Mechanical Rotation (Degree)	Operating Torque (mN m [in-oz])	Stop Torque (N m [in-lb])	Shaft Seal	A Slot Depth (mm [in])	B Slot Width (mm [in])	C Shaft Length (mm [in])	D Bushing Length (mm [in])		
485000M9017	1 M	10	10	10	284	312	S-4	312	1-4 [1-28]	12 [1.4]	no	1,60 [0.063]	1,19 [0.047]	50,8 [2.000]	9,53 [0.375]	yes	unassembled

Dimensional Drawings (For reference only: mm [in].)

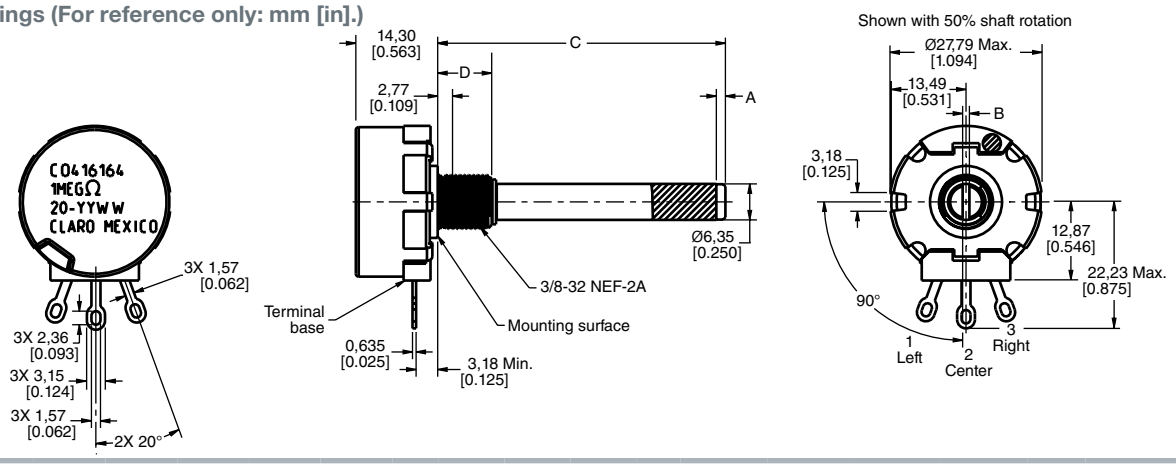

485 Series Order Guides

Table 485-K Order Guide

Catalog Listing	Electrical							Mechanical				Dimensions				RoHS Compliant	Mounting Hardware
	Resistance (Ohm)	Resistance Tolerance (±%)	End Resistance at CW, Max. (Ohm)	End Resistance at CCW, Max. (Ohm)	Effective Electrical Rotation, Typ. (Degree)	Electrical Rotation, ±3 (Degree)	Taper	Mechanical Rotation (Degree)	Operating Torque (mN m [in-oz])	Stop Torque (N m [in-lb])	Shaft Seal	A Slot Depth (mm [in])	B Slot Width (mm [in])	C Shaft Length (mm [in])	D Bushing Length (mm [in])		
485042M9668	10 k	10	4	100	284	311	S-7	312	1-6 [7-42]	12 [1.4]	yes	1,60 [0.063]	1,19 [0.047]	22,23 [0.875]	9,53 [0.375]	yes	unassembled

Dimensional Drawings (For reference only: mm [in].)

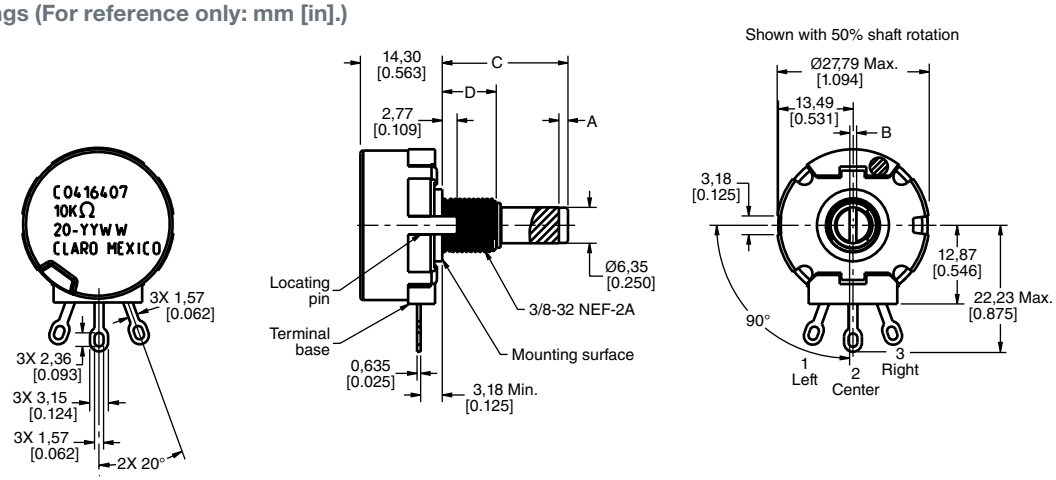

Table 485-L Order Guide

Catalog Listing	Electrical							Mechanical				Dimensions				RoHS Compliant	Mounting Hardware
	Resistance (Ohm)	Resistance Tolerance (±%)	End Resistance at CW, Max. (Ohm)	End Resistance at CCW, Max. (Ohm)	Effective Electrical Rotation, Typ. (Degree)	Electrical Rotation, ±3 (Degree)	Taper	Mechanical Rotation (Degree)	Operating Torque (mN m [in-oz])	Stop Torque (N m [in-lb])	Shaft Seal	A Slot Depth (mm [in])	B Slot Width (mm [in])	C Shaft Length (mm [in])	D Bushing Length (mm [in])		
485000M8911	1 M	10	10	10	304	312	S-2	312	1-4 [7-28]	12 [1.4]	no	1,60 [0.063]	1,19 [0.047]	22,23 [0.875]	9,53 [0.375]	yes	unassembled

Dimensional Drawings (For reference only: mm [in].)

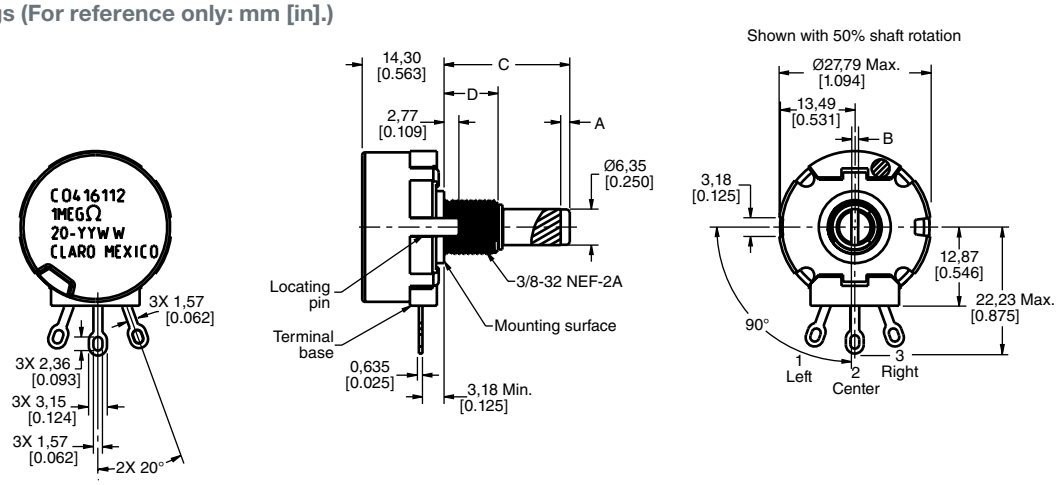

485 Series Order Guides

Table 485-M Order Guide

Catalog Listing	Electrical							Mechanical				Dimensions				RoHS Compliant	Mounting Hardware
	Resistance (Ohm)	Resistance Tolerance (±%)	End Resistance at CW, Max. (Ohm)	End Resistance at CCW, Max. (Ohm)	Effective Electrical Rotation, Typ. (Degree)	Electrical Rotation, ±3 (Degree)	Taper	Mechanical Rotation (Degree)	Operating Torque (mN m [in-oz])	Stop Torque (N m [in-lb])	Shaft Seal	A Slot Depth (mm [in])	B Slot Width (mm [in])	C Shaft Length (mm [in])	D Bushing Length (mm [in])		
485010M6860	5 k	10	4	4	33	312	S-9	312	1-4 [7-28]	12 [1.4]	no	1,60 [0.063]	1,19 [0.047]	27,19 [1.031]	7,92 [0.312]	yes	unassembled

Dimensional Drawings (For reference only: mm [in].)

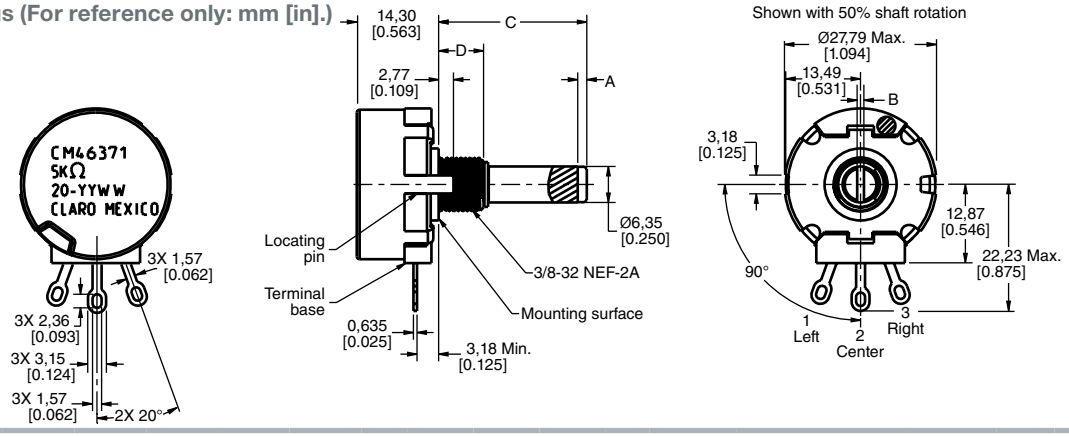

Table 485-N Order Guide

Catalog Listing	Electrical							Mechanical				Dimensions				RoHS Compliant	Mounting Hardware
	Resistance (Ohm)	Resistance Tolerance (±%)	End Resistance at CW, Max. (Ohm)	End Resistance at CCW, Max. (Ohm)	Effective Electrical Rotation, Typ. (Degree)	Electrical Rotation, ±3 (Degree)	Taper	Mechanical Rotation (Degree)	Operating Torque (mN m [in-oz])	Stop Torque (N m [in-lb])	Shaft Seal	A Slot Depth (mm [in])	B Slot Width (mm [in])	C Shaft Length (mm [in])	D Bushing Length (mm [in])		
485000M8990	5 k	10	4	4	45	312	S-10	312	1-6 [7-42]	12 [1.4]	yes	1,60 [0.063]	1,19 [0.047]	20,62 [0.182]	12,7 [0.500]	yes	unassembled
485008M0002	5 k	10	4	4	45	312	S-10	312	1-6 [7-42]	12 [1.4]	yes	1,60 [0.063]	1,19 [0.047]	50,8 [2.000]	12,7 [0.500]	no	unassembled
485008M8967	5 k	10	4	4	45	312	S-10	312	1-6 [7-42]	12 [1.4]	yes	1,60 [0.063]	1,19 [0.047]	50,8 [2.000]	12,7 [0.500]	yes	unassembled
485008M9458	5 k	10	4	4	45	312	S-10	312	1-6 [7-42]	12 [1.4]	yes	1,60 [0.063]	1,19 [0.047]	50,8 [2.000]	9,53 [0.375]	yes	unassembled
485008M9687	5 k	10	4	4	45	312	S-10	312	1-6 [7-42]	12 [1.4]	yes	1,60 [0.063]	1,19 [0.047]	47,63 [1.875]	9,53 [0.375]	yes	unassembled
485008M9688	5 k	10	4	4	45	312	S-A	312	1-6 [7-42]	12 [1.4]	yes	1,60 [0.063]	1,19 [0.047]	39,88 [1.570]	12,7 [0.500]	yes	unassembled

Dimensional Drawings (For reference only: mm [in].)

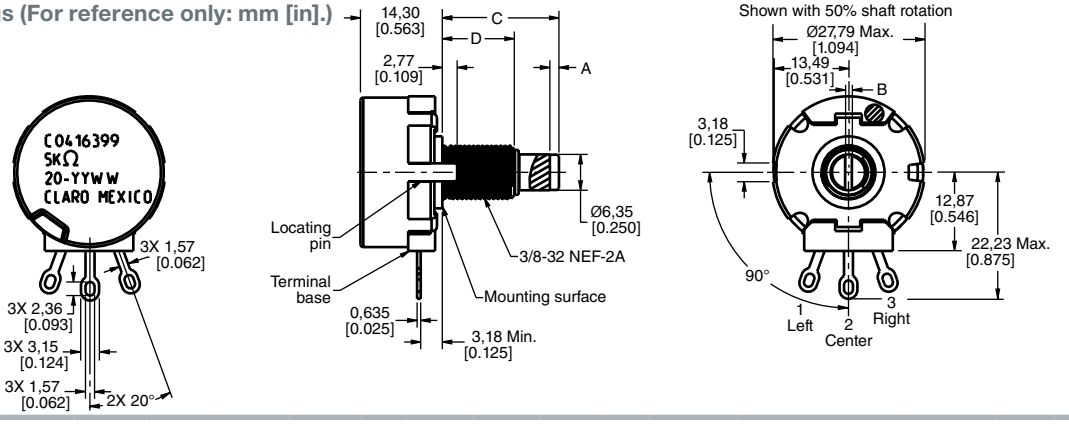

485 Series Order Guides

Table 485-O Order Guide

Catalog Listing	Electrical							Mechanical				Dimensions				RoHS Compliant	Mounting Hardware
	Resistance (Ohm)	Resistance Tolerance (±%)	End Resistance at CW, Max. (Ohm)	End Resistance at CCW, Max. (Ohm)	Effective Electrical Rotation, Typ. (Degree)	Electrical Rotation, ±3 (Degree)	Taper	Mechanical Rotation (Degree)	Operating Torque (mN m [in-oz])	Stop Torque (N m [in-lb])	Shaft Seal	A Slot Depth (mm [in])	B Slot Width (mm [in])	C Shaft Length (mm [in])	D Bushing Length (mm [in])		
485008M0004	5 k	10	4	4	45	312	S-10	312	1-6 [7-42]	12 [1.4]	yes	1,60 [0.063]	1,19 [0.047]	25,4 [1.000]	12,7 [0.500]	no	unassembled

Dimensional Drawings (For reference only: mm [in].)

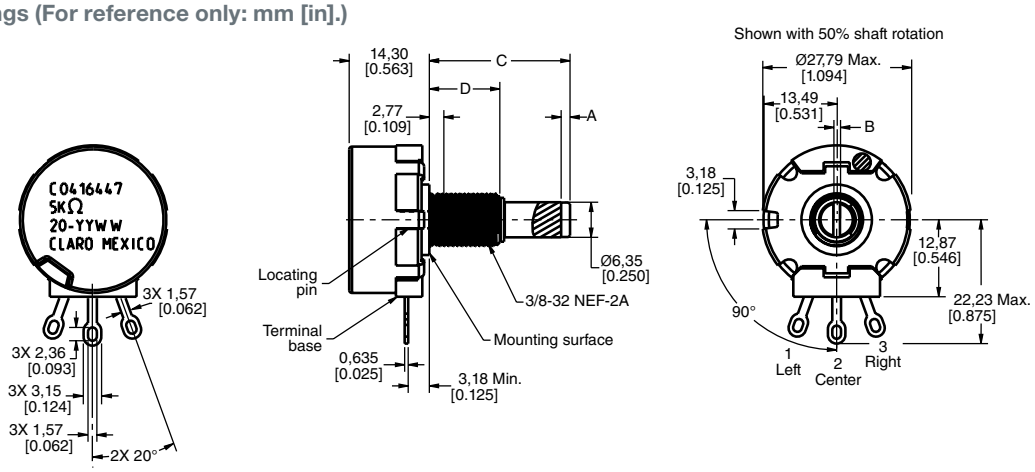

Table 485-P Order Guide

Catalog Listing	Electrical							Mechanical				Dimensions				RoHS Compliant	Mounting Hardware
	Resistance (Ohm)	Resistance Tolerance (±%)	End Resistance at CW, Max. (Ohm)	End Resistance at CCW, Max. (Ohm)	Effective Electrical Rotation, Typ. (Degree)	Electrical Rotation, ±3 (Degree)	Taper	Mechanical Rotation (Degree)	Operating Torque (mN m [in-oz])	Stop Torque (N m [in-lb])	Shaft Seal	A Slot Depth (mm [in])	B Slot Width (mm [in])	C Shaft Length (mm [in])	D Bushing Length (mm [in])		
485000M9651	20 k	10	4	4	46	312	S-10	312	1-4 [7-28]	12 [1.4]	no	1,60 [0.063]	1,19 [0.047]	50,8 [2.000]	9,53 [0.375]	yes	unassembled

Dimensional Drawings (For reference only: mm [in].)

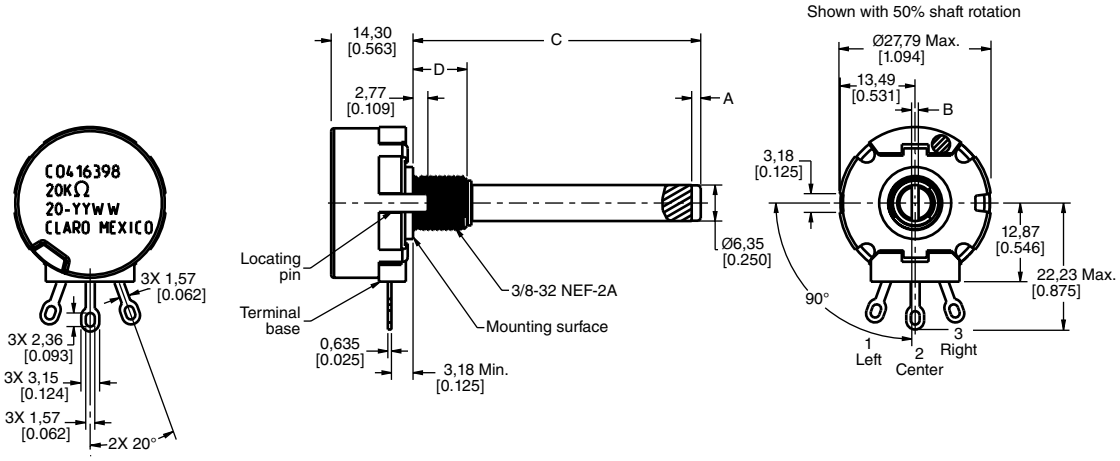

485 Series Order Guides

Table 485-Q Order Guide

Catalog Listing	Electrical							Mechanical				Dimensions				RoHS Compliant	Mounting Hardware
	Resistance (Ohm)	Resistance Tolerance (±%)	End Resistance at CW, Max. (Ohm)	End Resistance at CCW, Max. (Ohm)	Effective Electrical Rotation, Typ. (Degree)	Electrical Rotation, ±3 (Degree)	Taper	Mechanical Rotation (Degree)	Operating Torque (mN m [in-oz])	Stop Torque (N m [in-lb])	Shaft Seal	A Slot Depth (mm [in])	B Slot Width (mm [in])	C Shaft Length (mm [in])	D Bushing Length (mm [in])		
485030M9652	10 k	10	4	4	270	348	S-12	360	1-4	-	no	1,60 [0.063]	1,19 [0.047]	50,8 [2.000]	9,53 [0.375]	yes	unassembled

Dimensional Drawings (For reference only: mm [in].)

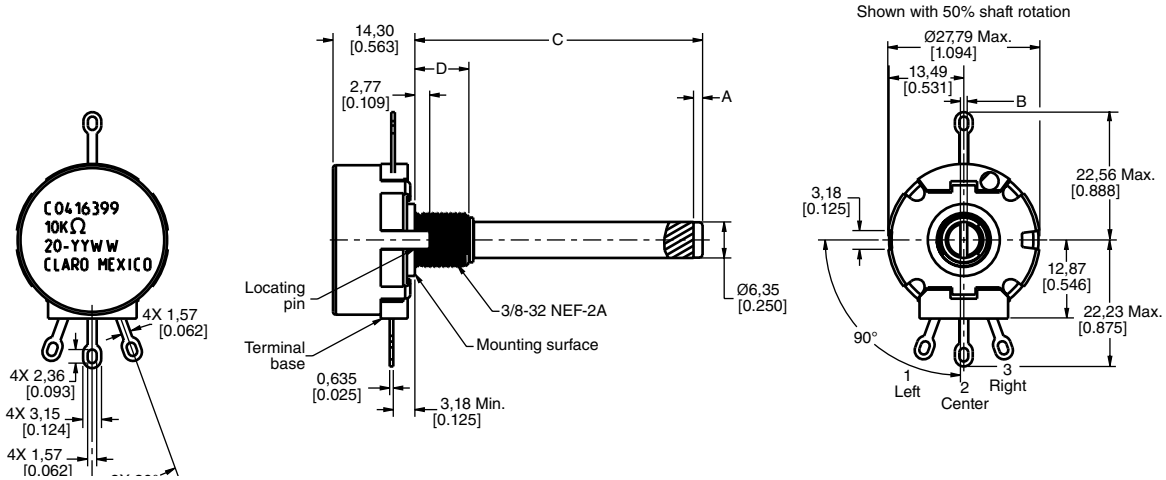

Table 485-R Series Order Guide

Catalog Listing	Electrical							Mechanical				Dimensions		RoHS Compliant	Mounting Hardware
	Resistance (Ohm)	Resistance Tolerance (±%)	End Resistance at CW, Max. (Ohm)	End Resistance at CCW, Max. (Ohm)	Effective Electrical Rotation, Typ. (Degree)	Electrical Rotation, ±3 (Degree)	Taper	Mechanical Rotation (Degree)	Operating Torque (mN m [in-oz])	Stop Torque (N m [in-lb])	Shaft Seal	A Shaft Length (mm [in])	B Bushing Length (mm [in])		
485040M9512	1 k	10	4	4	250	312	S-5	312	1-4	12	no	63,5 [2.500]	9,53 [0.375]	yes	unassembled

Dimensional Drawings (For reference only: mm [in].)

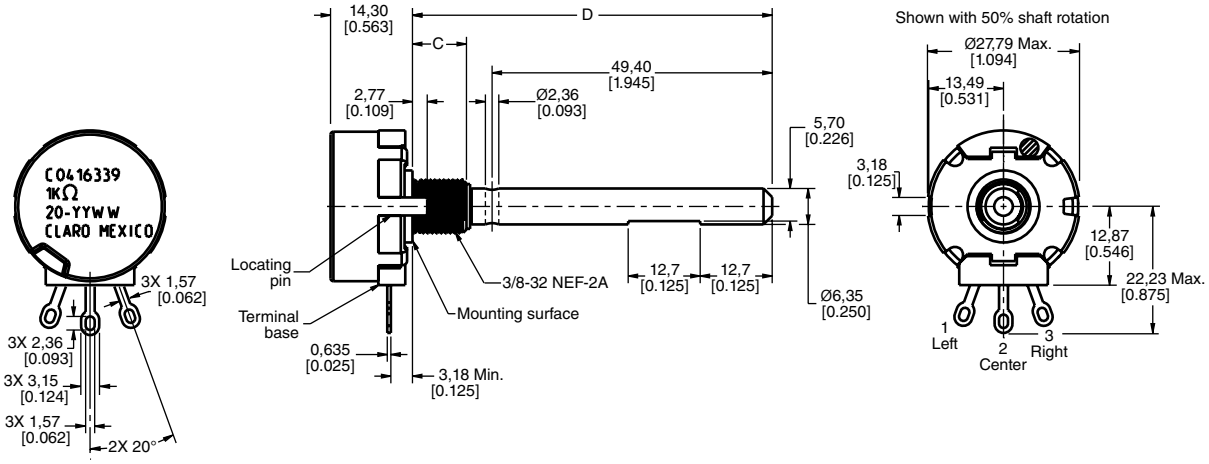

485 Series Order Guides

Table 485-S Order Guide

Catalog Listing	Electrical							Mechanical				Dimensions				RoHS Compliant	Mounting Hardware
	Resistance (Ohm)	Resistance Tolerance (±%)	End Resistance at CW, Max. (Ohm)	End Resistance at CCW, Max. (Ohm)	Effective Electrical Rotation, Typ. (Degree)	Electrical Rotation, ±3 (Degree)	Taper	Mechanical Rotation (Degree)	Operating Torque (mN m [in-oz])	Stop Torque (N m [in-lb])	Shaft Seal	A Slot Depth (mm [in])	B Slot Width (mm [in])	C Shaft Length (mm [in])	D Bushing Length (mm [in])		
485048M9728	5 k	5	4	4	45	312	S-15	312	1-6	12	yes	0,23 [0.009]	1,19 [0.047]	25,15 [0.990]	12,7 [0.500]	no	unassembled

Dimensional Drawings (For reference only: mm [in].)

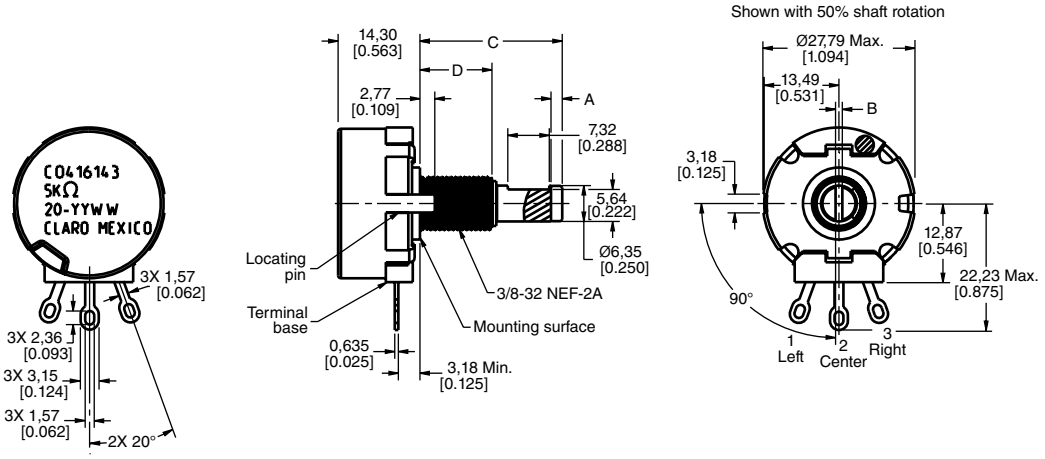

Table 485-T Order Guide

Catalog Listing	Electrical							Mechanical				Dimensions		RoHS Compliant	Mounting Hardware
	Resistance (Ohm)	Resistance Tolerance (±%)	End Resistance at CW, Max. (Ohm)	End Resistance at CCW, Max. (Ohm)	Effective Electrical Rotation, Typ. (Degree)	Electrical Rotation, ±3 (Degree)	Taper	Mechanical Rotation (Degree)	Operating Torque (mN m [in-oz])	Stop Torque (N m [in-lb])	Shaft Seal	A Shaft Length (mm [in])	B Bushing Length (mm [in])		
485022M8995	20 k	10	4	4	158	348	S-8	360	1-4	-	no	19,05 [0.750]	8,69 [0.342]	yes	unassembled

Dimensional Drawings (For reference only: mm [in].)

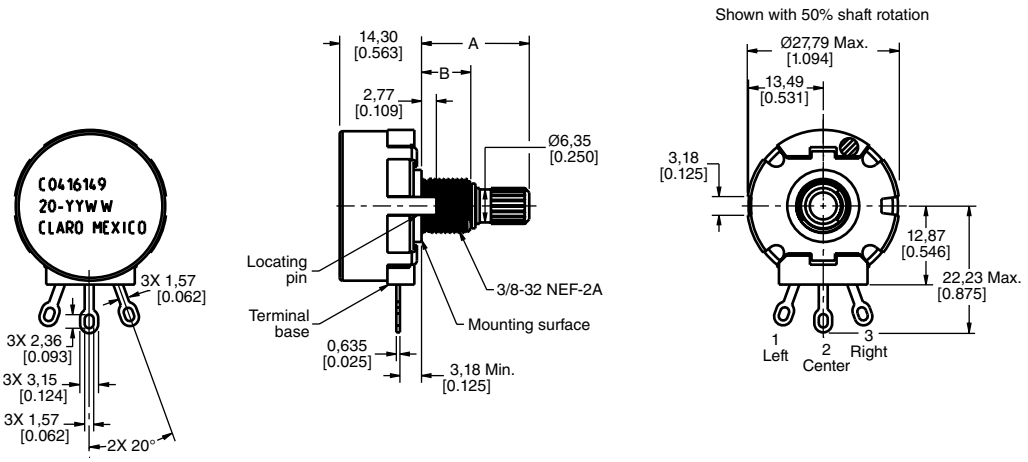

53C Series Specific Configurations

Table 8. 53C Series Specific Configurations

Shaft Type	Bushing Type	AR Pin	Termin-ation	Configuration with Associated Hardware
53C1 (See Table 53C1 on pp. 33-34.)				
round	standard, 9,53 mm [0.375 in]	1	solder lug	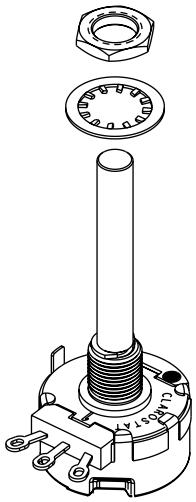
53C3 (See Table 53C3 on pp. 36-37.)				
slotted	standard, 6,35 mm [0.25 in]	1	solder lug	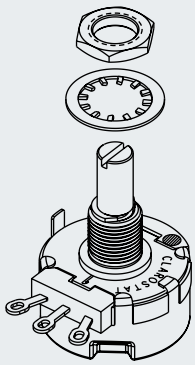

Shaft Type	Bushing Type	AR Pin	Termin-ation	Configuration with Associated Hardware
53C2 (See Table 53C2 on p. 35.)				
slotted	high torque, 12,7 mm [0.500 in]	1	solder lug	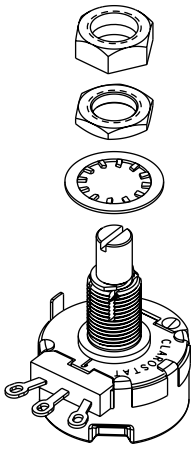

53C Series Order Guides

Table 53C1 Order Guide

Catalog Listing	Electrical							Mechanical				Dimensions		RoHS Compliant	Mounting Hardware
	Resistance (Ohm)	Resistance Tolerance (±%)	End Resistance at CW, Max. (Ohm)	End Resistance at CCW, Max. (Ohm)	Effective Electrical Rotation, Typ. (Degree)	Electrical Rotation, ±3 (Degree)	Taper	Mechanical Rotation (Degree)	Operating Torque (mN m [in-oz])	Stop Torque (N m [in-lb])	Shaft Seal	A Shaft Length (mm [in])	B Bushing Length (mm [in])		
53C1100	100	10	4	4	274	312	S-4	312	1-6 [7-42]	12 [1.4]	no	19,05 [2.00]	9,53 [0.375]	yes	unassembled
53C1100K	100 k	10	4	4	274	312	S-4	312	1-6 [7-42]	12 [1.4]	no	19,05 [2.00]	9,53 [0.375]	yes	unassembled
53C110K	10 k	10	4	4	274	312	S-4	312	1-6 [7-42]	12 [1.4]	no	19,05 [2.00]	9,53 [0.375]	yes	unassembled
53C110MEG	10 M	20	10	10	274	312	S-4	312	1-6 [7-42]	12 [1.4]	no	19,05 [2.00]	9,53 [0.375]	yes	unassembled
53C11500	1.5 k	10	4	4	274	312	S-4	312	1-6 [7-42]	12 [1.4]	no	19,05 [2.00]	9,53 [0.375]	yes	unassembled
53C115K	15 k	10	4	4	274	312	S-4	312	1-6 [7-42]	12 [1.4]	no	19,05 [2.00]	9,53 [0.375]	yes	unassembled
53C11K	1 k	10	4	4	274	312	S-4	312	1-6 [7-42]	12 [1.4]	no	19,05 [2.00]	9,53 [0.375]	yes	unassembled
53C11MEG	1 M	20	10	10	274	312	S-4	312	1-6 [7-42]	12 [1.4]	no	19,05 [2.00]	9,53 [0.375]	yes	unassembled
53C120K	20 k	10	4	4	274	312	S-4	312	1-6 [7-42]	12 [1.4]	no	19,05 [2.00]	9,53 [0.375]	yes	unassembled
53C1250	250	10	4	4	274	312	S-4	312	1-6 [7-42]	12 [1.4]	no	19,05 [2.00]	9,53 [0.375]	yes	unassembled
53C12500	2.5 k	10	4	4	274	312	S-4	312	1-6 [7-42]	12 [1.4]	no	19,05 [2.00]	9,53 [0.375]	yes	unassembled
53C1250K	250 k	10	10	10	274	312	S-4	312	1-6 [7-42]	12 [1.4]	no	19,05 [2.00]	9,53 [0.375]	yes	unassembled
53C125K	25 k	10	4	4	274	312	S-4	312	1-6 [7-42]	12 [1.4]	no	19,05 [2.00]	9,53 [0.375]	yes	unassembled
53C12K	2 k	10	4	4	274	312	S-4	312	1-6 [7-42]	12 [1.4]	no	19,05 [2.00]	9,53 [0.375]	yes	unassembled
53C135K	35 k	10	4	4	274	312	S-4	312	1-6 [7-42]	12 [1.4]	no	19,05 [2.00]	9,53 [0.375]	yes	unassembled
53C150	50 k	10	4	4	274	312	S-4	312	1-6 [7-42]	12 [1.4]	no	19,05 [2.00]	9,53 [0.375]	yes	unassembled
53C1500	500	10	4	4	274	312	S-4	312	1-6 [7-42]	12 [1.4]	no	19,05 [2.00]	9,53 [0.375]	yes	unassembled
53C1500K	500 k	10	10	10	274	312	S-4	312	1-6 [7-42]	12 [1.4]	no	19,05 [2.00]	9,53 [0.375]	yes	unassembled
53C150K	50 k	10	4	4	274	312	S-4	312	1-6 [7-42]	12 [1.4]	no	19,05 [2.00]	9,53 [0.375]	yes	unassembled
53C15K	5 k	10	4	4	274	312	S-4	312	1-6 [7-42]	12 [1.4]	no	19,05 [2.00]	9,53 [0.375]	yes	unassembled
53C15MEG	5 M	20	10	10	274	312	S-4	312	1-6 [7-42]	12 [1.4]	no	19,05 [2.00]	9,53 [0.375]	yes	unassembled
53C1SW100K	100 k	10	4	4	274	312	S-4	312	1-6 [7-42]	12 [1.4]	no	19,05 [2.00]	9,53 [0.375]	yes	unassembled
53C1SW10K	10 k	10	4	4	274	312	S-4	312	1-6 [7-42]	12 [1.4]	no	19,05 [2.00]	9,53 [0.375]	yes	unassembled

(Continued on next page.)

53C Series Order Guide

Table 53C1 Order Guide (continued)

Catalog Listing	Electrical							Mechanical				Dimensions		RoHS Compliant	Mounting Hardware
	Resistance (Ohm)	Resistance Tolerance (±%)	End Resistance at CW, Max. (Ohm)	End Resistance at CCW, Max. (Ohm)	Effective Electrical Rotation, Typ. (Degree)	Electrical Rotation, ±3 (Degree)	Taper	Mechanical Rotation (Degree)	Operating Torque (mN m [in-oz])	Stop Torque (N m [in-lb])	Shaft Seal	A Shaft Length (mm [in])	B Bushing Length (mm [in])		
53C1100KZ	100 k	10	1 k	4	274	312	Z	312	1-6 [7-42]	12 [1.4]	no	50,8 [2.00]	9,53 [0.375]	yes	unassembled
53C110KZ	10 k	10	100	4	274	312	Z	312	1-6 [7-42]	12 [1.4]	no	50,8 [2.00]	9,53 [0.375]	yes	unassembled
53C11MEGZ	1 M	20	10 k	10	274	312	Z	312	1-6 [7-42]	12 [1.4]	no	50,8 [2.00]	9,53 [0.375]	yes	unassembled
53C1250KZ	250 k	10	2.5 k	10	274	312	Z	312	1-6 [7-42]	12 [1.4]	no	50,8 [2.00]	9,53 [0.375]	yes	unassembled
53C125KZ	25 k	10	250	4	274	312	Z	312	1-6 [7-42]	12 [1.4]	no	50,8 [2.00]	9,53 [0.375]	yes	unassembled
53C1500KZ	500 k	10	5 k	10	274	312	Z	312	1-6 [7-42]	12 [1.4]	no	50,8 [2.00]	9,53 [0.375]	yes	unassembled
53C150KZ	50 k	10	500	4	274	312	Z	312	1-6 [7-42]	12 [1.4]	no	50,8 [2.00]	9,53 [0.375]	yes	unassembled
53C15KZ	5 k	10	50	4	274	312	Z	312	1-6 [7-42]	12 [1.4]	no	50,8 [2.00]	9,53 [0.375]	yes	unassembled
53C1-100K-RZ	100 k	10	1 k	4	274	312	RZ	312	1-6 [7-42]	12 [1.4]	no	50,8 [2.00]	9,53 [0.375]	yes	unassembled

Dimensional Drawings (For reference only: mm [in].)

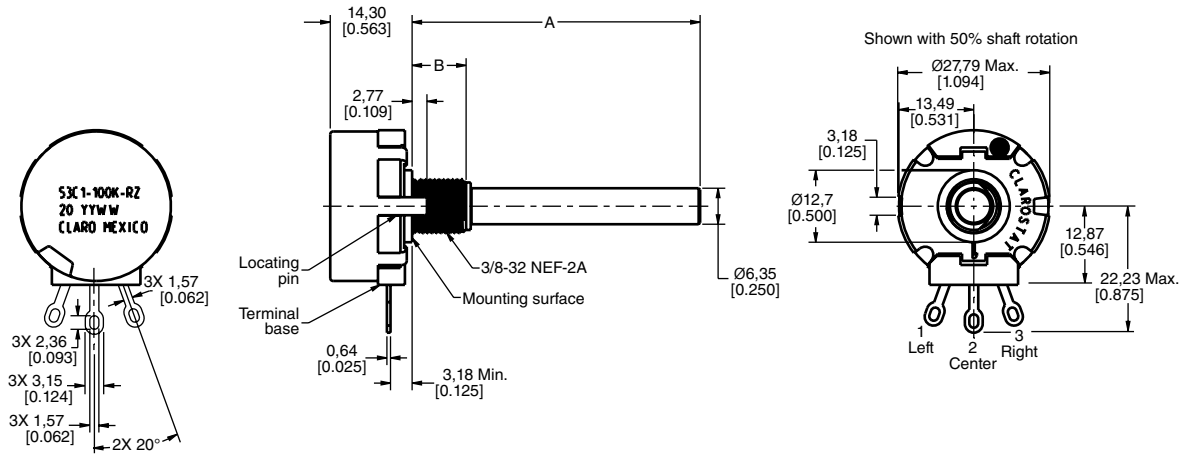

53C Series Order Guides

Table 53C2 Order Guide

Catalog Listing	Electrical							Mechanical				Dimensions		RoHS Compliant	Mounting Hardware
	Resistance (Ohm)	Resistance Tolerance (±%)	End Resistance at CW, Max. (Ohm)	End Resistance at CCW, Max. (Ohm)	Effective Electrical Rotation, Typ. (Degree)	Electrical Rotation, ±3 (Degree)	Taper	Mechanical Rotation (Degree)	Operating Torque (mN m [in-oz])	Stop Torque (N m [in-lb])	Shaft Seal	A Shaft Length (mm [in])	B Bushing Length (mm [in])		
53C2100	100	10	4	4	274	312	S-4	312	1-6 [7-42]	12 [1.4]	no	15,88 [0.625]	12,7 [0.500]	no	unassembled
53C2100K	100 k	10	4	4	274	312	S-4	312	1-6 [7-42]	12 [1.4]	no	15,88 [0.625]	12,7 [0.500]	no	unassembled
53C210K	10 k	10	4	4	274	312	S-4	312	1-6 [7-42]	12 [1.4]	no	15,88 [0.625]	12,7 [0.500]	no	unassembled
53C21500	1.5 k	10	4	4	274	312	S-4	312	1-6 [7-42]	12 [1.4]	no	15,88 [0.625]	12,7 [0.500]	no	unassembled
53C2150K	150 k	10	4	4	274	312	S-4	312	1-6 [7-42]	12 [1.4]	no	15,88 [0.625]	12,7 [0.500]	no	unassembled
53C215K	15 k	10	4	4	274	312	S-4	312	1-6 [7-42]	12 [1.4]	no	15,88 [0.625]	12,7 [0.500]	no	unassembled
53C21K	1 k	10	4	4	274	312	S-4	312	1-6 [7-42]	12 [1.4]	no	15,88 [0.625]	12,7 [0.500]	no	unassembled
53C21MEG	1 M	10	10	10	274	312	S-4	312	1-6 [7-42]	12 [1.4]	no	15,88 [0.625]	12,7 [0.500]	no	unassembled
53C22.5MEG	2.5 M	20	10	10	274	312	S-4	312	1-6 [7-42]	12 [1.4]	no	15,88 [0.625]	12,7 [0.500]	no	unassembled
53C220K	20 k	10	4	4	274	312	S-4	312	1-6 [7-42]	12 [1.4]	no	15,88 [0.625]	12,7 [0.500]	no	unassembled
53C2250	250	10	4	4	274	312	S-4	312	1-6 [7-42]	12 [1.4]	no	15,88 [0.625]	12,7 [0.500]	no	unassembled
53C22500	2.5 k	10	4	4	274	312	S-4	312	1-6 [7-42]	12 [1.4]	no	15,88 [0.625]	12,7 [0.500]	no	unassembled
53C2250K	250 k	10	10	10	274	312	S-4	312	1-6 [7-42]	12 [1.4]	no	15,88 [0.625]	12,7 [0.500]	no	unassembled
53C225K	25 k	10	4	4	274	312	S-4	312	1-6 [7-42]	12 [1.4]	no	15,88 [0.625]	12,7 [0.500]	no	unassembled
53C22K	2 k	10	4	4	274	312	S-4	312	1-6 [7-42]	12 [1.4]	no	15,88 [0.625]	12,7 [0.500]	no	unassembled
53C22MEG	2 M	20	10	10	274	312	S-4	312	1-6 [7-42]	12 [1.4]	no	15,88 [0.625]	12,7 [0.500]	no	unassembled
53C23.5MEG	3.5 M	20	10	10	274	312	S-4	312	1-6 [7-42]	12 [1.4]	no	15,88 [0.625]	12,7 [0.500]	no	unassembled
53C250	50	10	4	4	274	312	S-4	312	1-6 [7-42]	12 [1.4]	no	15,88 [0.625]	12,7 [0.500]	no	unassembled
53C2500	500	10	4	4	274	312	S-4	312	1-6 [7-42]	12 [1.4]	no	15,88 [0.625]	12,7 [0.500]	no	unassembled
53C2500K	500 k	10	10	10	274	312	S-4	312	1-6 [7-42]	12 [1.4]	no	15,88 [0.625]	12,7 [0.500]	no	unassembled
53C250K	50 k	10	4	4	274	312	S-4	312	1-6 [7-42]	12 [1.4]	no	15,88 [0.625]	12,7 [0.500]	no	unassembled
53C25K	5 k	10	4	4	274	312	S-4	312	1-6 [7-42]	12 [1.4]	no	15,88 [0.625]	12,7 [0.500]	no	unassembled
53C25MEG	5 M	20	10	10	274	312	S-4	312	1-6 [7-42]	12 [1.4]	no	15,88 [0.625]	12,7 [0.500]	no	unassembled

Dimensional Drawings (For reference only: mm [in].)

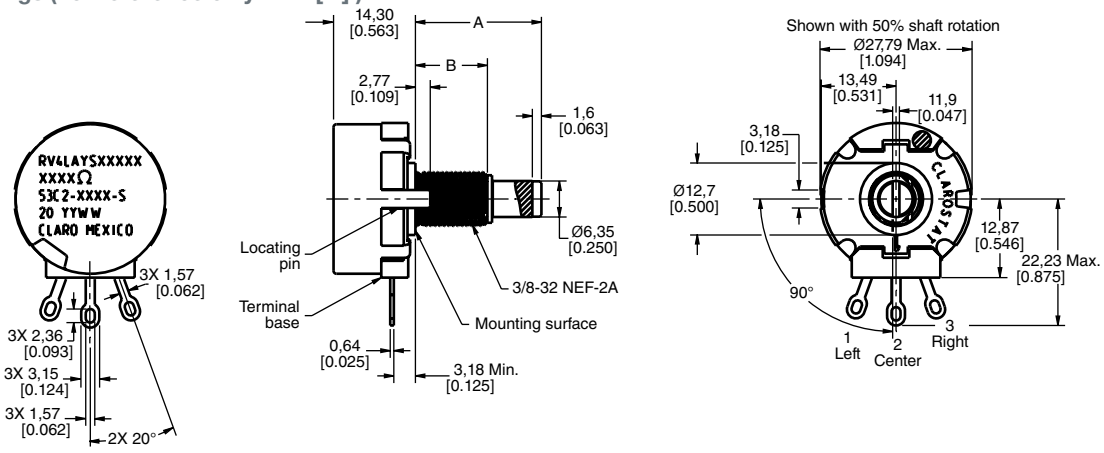

53C Series Order Guide

Table 53C3 Order Guide

Catalog Listing	Electrical							Mechanical				Dimensions		RoHS Compliant	Mounting Hardware
	Resistance (Ohm)	Resistance Tolerance (±%)	End Resistance at CW, Max. (Ohm)	End Resistance at CCW, Max. (Ohm)	Effective Electrical Rotation, Typ. (Degree)	Electrical Rotation, ±3 (Degree)	Taper	Mechanical Rotation (Degree)	Operating Torque (mN m [in-oz])	Stop Torque (N m [in-lb])	Shaft Seal	A Shaft Length (mm [in])	B Bushing Length (mm [in])		
53C3100	100	10	4	4	274	312	S-4	312	1-6 [7-42]	12 [1.4]	no	22,23 [0.875]	9,53 [0.375]	no	unassembled
53C3100K	100 k	10	4	4	274	312	S-4	312	1-6 [7-42]	12 [1.4]	no	22,23 [0.875]	9,53 [0.375]	no	unassembled
53C310K	10 k	10	4	4	274	312	S-4	312	1-6 [7-42]	12 [1.4]	no	22,23 [0.875]	9,53 [0.375]	no	unassembled
53C3150	150	10	4	4	274	312	S-4	312	1-6 [7-42]	12 [1.4]	no	22,23 [0.875]	9,53 [0.375]	no	unassembled
53C31500	1.5 k	10	4	4	274	312	S-4	312	1-6 [7-42]	12 [1.4]	no	22,23 [0.875]	9,53 [0.375]	no	unassembled
53C3150K	150 K	10	4	4	274	312	S-4	312	1-6 [7-42]	12 [1.4]	no	22,23 [0.875]	9,53 [0.375]	no	unassembled
53C315K	15 k	10	4	4	274	312	S-4	312	1-6 [7-42]	12 [1.4	no	22,23 [0.875]	9,53 [0.375]	no	unassembled
53C31K	1 k	10	4	4	274	312	S-4	312	1-6 [7-42]	12 [1.4]	no	22,23 [0.875]	9,53 [0.375]	no	unassembled
53C31K/NEW	1 k	10	4	4	274	312	S-4	312	1-6 [7-42]	12 [1.4]	no	22,23 [0.875]	9,53 [0.375]	no	unassembled
53C31MEG	1 M	10	10	10	274	312	S-4	312	1-6 [7-42]	12 [1.4]	no	22,23 [0.875]	9,53 [0.375]	no	unassembled
53C32.5MEG	2.5 M	20	10	10	274	312	S-4	312	1-6 [7-42]	12 [1.4]	no	22,23 [0.875]	9,53 [0.375]	no	unassembled
53C3200K	200 k	10	4	4	274	312	S-4	312	1-6 [7-42]	12 [1.4]	no	22,23 [0.875]	9,53 [0.375]	no	unassembled
53C320K	20 k	10	4	4	274	312	S-4	312	1-6 [7-42]	12 [1.4]	no	22,23 [0.875]	9,53 [0.375]	no	unassembled
53C3250	250	10	4	4	274	312	S-4	312	1-6 [7-42]	12 [1.4]	no	22,23 [0.875]	9,53 [0.375]	no	unassembled
53C32500	2.5 k	10	4	4	274	312	S-4	312	1-6 [7-42]	12 [1.4]	no	22,23 [0.875]	9,53 [0.375]	no	unassembled
53C3250K	250 k	10	10	10	274	312	S-4	312	1-6 [7-42]	12 [1.4]	no	22,23 [0.875]	9,53 [0.375]	no	unassembled
53C325K	25 k	10	4	4	274	312	S-4	312	1-6 [7-42]	12 [1.4]	no	22,23 [0.875]	9,53 [0.375]	no	unassembled
53C32K	2 k	10	4	4	274	312	S-4	312	1-6 [7-42]	12 [1.4]	no	22,23 [0.875]	9,53 [0.375]	no	unassembled
53C32MEG	2 M	20	10	10	274	312	S-4	312	1-6 [7-42]	12 [1.4]	no	22,23 [0.875]	9,53 [0.375]	no	unassembled
53C3350	350	10	4	4	274	312	S-4	312	1-6 [7-42]	12 [1.4]	no	22,23 [0.875]	9,53 [0.375]	no	unassembled
53C33500	3.5 k	10	4	4	274	312	S-4	312	1-6 [7-42]	12 [1.4]	no	22,23 [0.875]	9,53 [0.375]	no	unassembled
53C350	50	10	4	4	274	312	S-4	312	1-6 [7-42]	12 [1.4]	no	22,23 [0.875]	9,53 [0.375]	no	unassembled
53C3500	500	10	4	4	274	312	S-4	312	1-6 [7-42]	12 [1.4]	no	22,23 [0.875]	9,53 [0.375]	no	unassembled
53C3500K	500 k	10	10	10	274	312	S-4	312	1-6 [7-42]	12 [1.4]	no	22,23 [0.875]	9,53 [0.375]	no	unassembled
53C3500K/NEW	500 k	10	10	10	274	312	S-4	312	1-6 [7-42]	12 [1.4]	no	22,23 [0.875]	9,53 [0.375]	no	unassembled
53C350K	50 k	10	4	4	274	312	S-4	312	1-6 [7-42]	12 [1.4]	no	22,23 [0.875]	9,53 [0.375]	no	unassembled

(Continued on next page.)

53C Series Order Guide

Table 53C3 Order Guide (continued)

Catalog Listing	Electrical							Mechanical				Dimensions		RoHS Compliant	Mounting Hardware
	Resistance (Ohm)	Resistance Tolerance (±%)	End Resistance at CW, Max. (Ohm)	End Resistance at CCW, Max. (Ohm)	Effective Electrical Rotation, Typ. (Degree)	Electrical Rotation, ±3 (Degree)	Taper	Mechanical Rotation (Degree)	Operating Torque (mN m [in-oz])	Stop Torque (N m [in-lb])	Shaft Seal	A Shaft Length (mm [in])	B Bushing Length (mm [in])		
53C35K	5 k	10	4	4	274	312	S-4	312	1-6 [7-42]	12 [1.4]	no	22,23 [0.875]	9,53 [0.375]	no	unassembled
53C35MEG	5 M	20	10	10	274	312	S-4	312	1-6 [7-42]	12 [1.4]	no	22,23 [0.875]	9,53 [0.375]	no	unassembled
53C3750K	750 k	10	4	4	274	312	S-4	312	1-6 [7-42]	12 [1.4]	no	22,23 [0.875]	9,53 [0.375]	no	unassembled
53C375K	75 k	10	4	4	274	312	S-4	312	1-6 [7-42]	12 [1.4]	no	22,23 [0.875]	9,53 [0.375]	no	unassembled

Dimensional Drawings (For reference only: mm [in].)

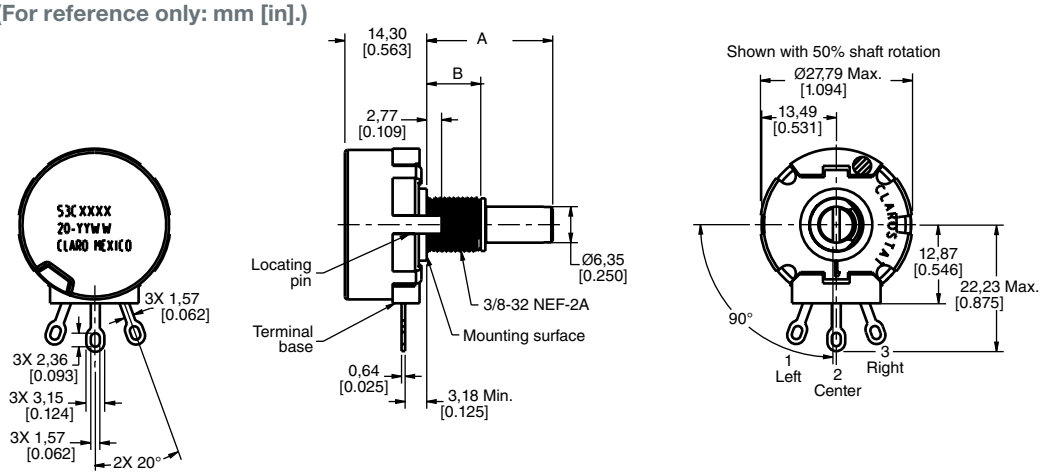

385 Series Specific Configurations

Table 9. 385 Series Specific Configurations

Shaft Type	Bushing Type	AR Pin	Termin-ation	Configuration with Associated Hardware	Shaft Type	Bushing Type	AR Pin	Termin-ation	Configuration with Associated Hardware
385-A (See Table 385-A on p. 40.)					**385-B (See Table 385-B on p. 40.)**				
flatted	standard, 9,53 mm [0.375 in]	1	solder lug	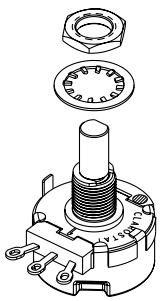	round	standard, 9,53 mm [0.375 in]	1	solder lug	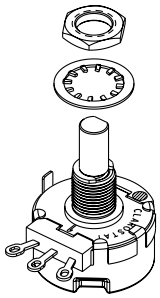
385-C (See Table 385-C on p. 41.)					**385-D (See Table 385-D on p. 41.)**				
flatted	standard, 9,53 mm [0.375 in]	1 and 2	solder lug	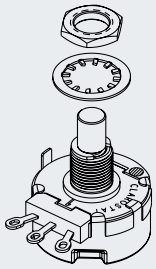	slotted	standard, 9,53 mm [0.375 in]	1	solder lug	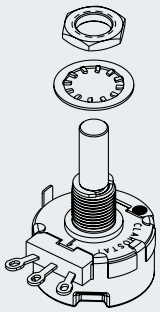
385-E (See Table 385-E on p. 42.)					**385-F (See Table 385-F on p. 42.)**				
slotted	high torque, 12,7 mm [0.500 in]	1	solder lug	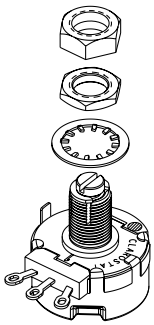	slotted	high torque, 12,7 mm [0.500 in]	1	solder lug	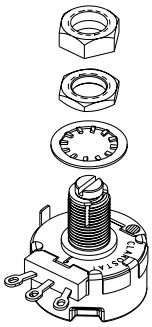
385-G (See Table 385-G on p. 43.)					**385-H (See Table 385-H on p. 43.)**				
slotted	high torque, 12,7 mm [0.500 in]	1	solder lug	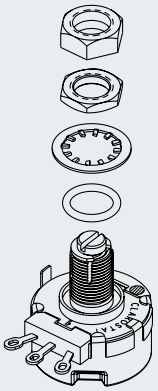	slotted	standard, 9,53 mm [0.375 in]	1	solder lug	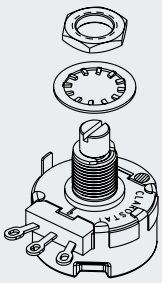

385 Series Specific Configurations

Table 9. 385 Series Specific Configurations (continued)

Shaft Type	Bushing Type	AR Pin	Termin-ation	Configuration with Associated Hardware	Shaft Type	Bushing Type	AR Pin	Termin-ation	Configuration with Associated Hardware
385-I (See Table 385-I on p. 44.)					**385-J (See Table 385-J on p. 45.)**				
slotted	standard, 9,53 mm [0.375 in]	1	solder lug	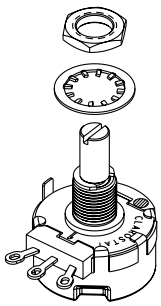	slotted	standard, 9,53 mm [0.375 in]	1	solder lug	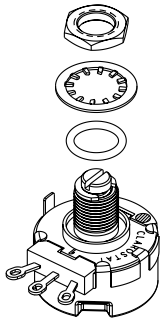
385-K (See Table 385-K on p. 45.)					**385-L (See Table 385-L on p. 46.)**				
slotted	standard, 9,53 mm [0.375 in]	1	solder lug	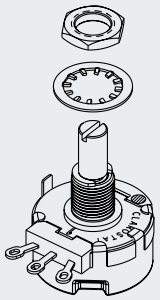	slotted	standard, 9,53 mm [0.375 in]	1	solder lug	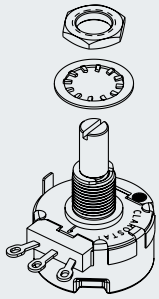

385 Series Order Guides

Table 385-A Order Guide

Catalog Listing	Electrical							Mechanical				Dimensions				RoHS Compliant	Mounting Hardware
	Resistance (Ohm)	Resistance Tolerance (±%)	End Resistance at CW, Max. (Ohm)	End Resistance at CCW, Max. (Ohm)	Effective Electrical Rotation, Typ. (Degree)	Electrical Rotation, ±3 (Degree)	Taper	Mechanical Rotation (Degree)	Operating Torque (mN m [in-oz])	Stop Torque (N m [in-lb])	Shaft Seal	A Flat Length (mm [in])	B Flat Thickness (mm [in])	C Shaft Length (mm [in])	D Bushing Length (mm [in])		
385000M5783	10 k	10	4	4	274	312	S-4	312	1-4 [7-28]	12 [1.4]	no	12,27 [0.483]	5,53 [0.218]	22,23 [0.875]	9,53 [0.375]	yes	unassembled
385000M9136	5 k	10	4	4	274	312	S-4	312	1-4 [7-28]	12 [1.4]	no	9,53 [0.375]	3,96 [0.156]	22,23 [0.875]	9,53 [0.375]	yes	unassembled

Dimensional Drawings (For reference only: mm [in].)

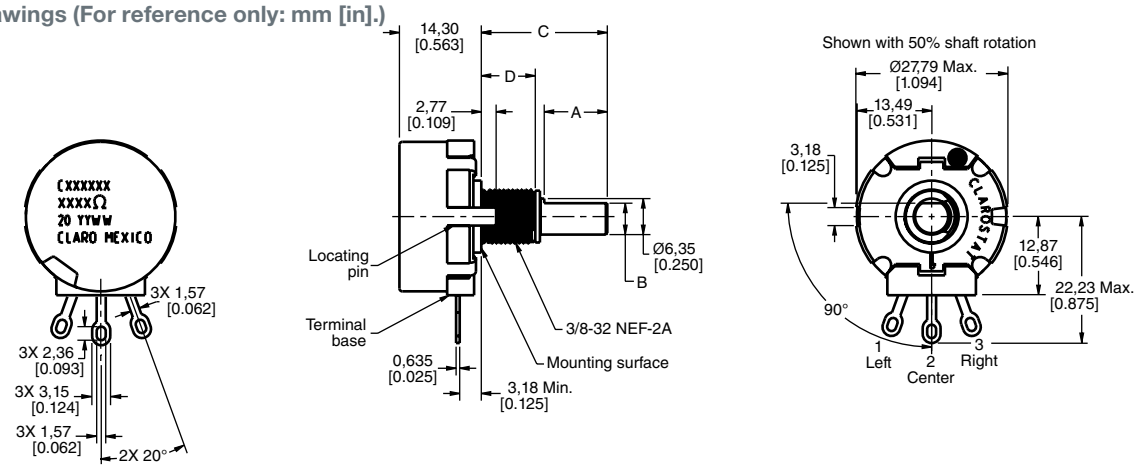

Table 385-B Order Guide

Catalog Listing	Electrical							Mechanical				Dimensions				RoHS Compliant	Mounting Hardware
	Resistance (Ohm)	Resistance Tolerance (±%)	End Resistance at CW, Max. (Ohm)	End Resistance at CCW, Max. (Ohm)	Effective Electrical Rotation, Typ. (Degree)	Electrical Rotation, ±3 (Degree)	Taper	Mechanical Rotation (Degree)	Operating Torque (mN m [in-oz])	Stop Torque (N m [in-lb])	Shaft Seal	A Flat Length (mm [in])	B Flat Thickness (mm [in])	C Shaft Length (mm [in])	D Bushing Length (mm [in])		
385500M0012	100 k	10	4	4	274	312	S-4	312	1-4 [7-28]	12 [1.4]	no	9,53 [0.375]	5,53 [0.218]	22,23 [0.875]	9,53 [0.375]	no	unassembled
385500M4863	1 k	10	4	4	274	312	S-4	312	1-4 [7-28]	12 [1.4]	no	9,53 [0.375]	5,53 [0.218]	22,23 [0.875]	9,53 [0.375]	no	unassembled
385500M5694	5 k	10	4	4	274	312	S-4	312	1-4 [7-28]	12 [1.4]	no	9,53 [0.375]	5,53 [0.218]	22,23 [0.875]	9,53 [0.375]	no	unassembled

Dimensional Drawings (For reference only: mm [in].)

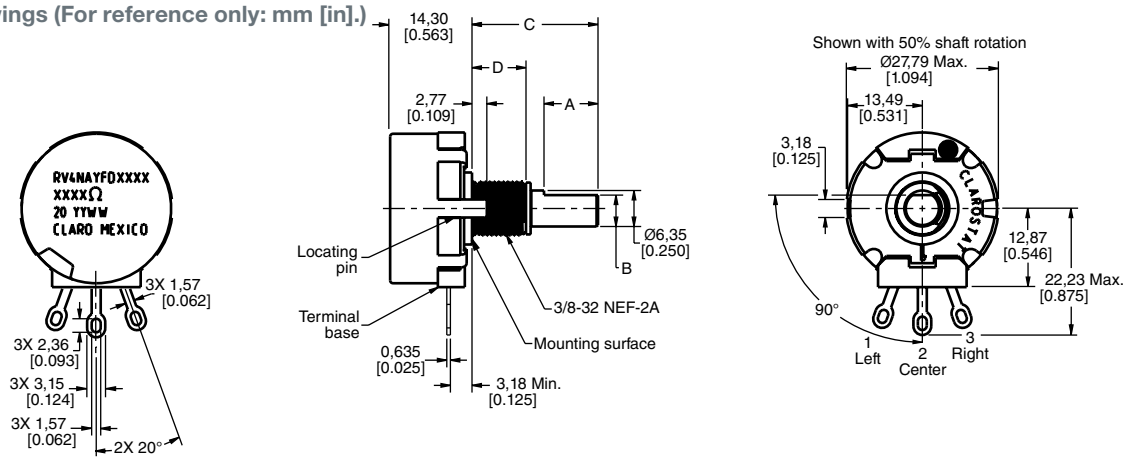

385 Series Order Guides

Table 385-C Order Guide

Catalog Listing	Electrical							Mechanical				Dimensions		RoHS Compliant	Mounting Hardware
	Resistance (Ohm)	Resistance Tolerance (±%)	End Resistance at CW, Max. (Ohm)	End Resistance at CCW, Max. (Ohm)	Effective Electrical Rotation, Typ. (Degree)	Electrical Rotation, ±3 (Degree)	Taper	Mechanical Rotation (Degree)	Operating Torque (mN m [in-oz])	Stop Torque (N m [in-lb])	Shaft Seal	A Shaft Length (mm [in])	B Bushing Length (mm [in])		
385000M8551	150	10	4	4	274	312	S-4	312	1-4 [7-28]	12 [1.4]	no	19,05 [0.750]	9,53 [0.375]	yes	unassembled
385000M9168	100	10	4	4	274	312	S-4	312	1-4 [7-28]	12 [1.4]	no	19,05 [0.750]	9,53 [0.375]	yes	unassembled

Dimensional Drawings (For reference only: mm [in].)

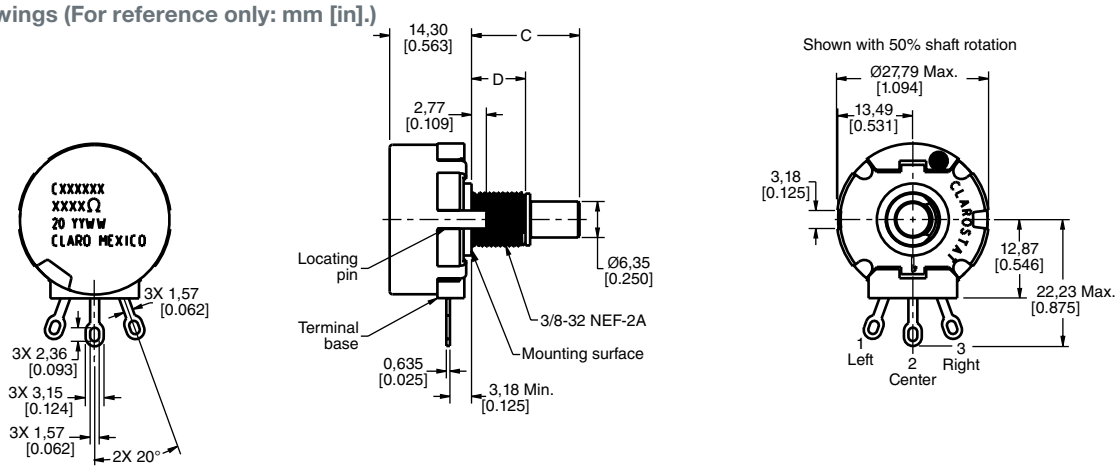

Table 385-D Order Guide

Catalog Listing	Electrical							Mechanical				Dimensions		RoHS Compliant	Mounting Hardware
	Resistance (Ohm)	Resistance Tolerance (±%)	End Resistance at CW, Max. (Ohm)	End Resistance at CCW, Max. (Ohm)	Effective Electrical Rotation, Typ. (Degree)	Electrical Rotation, ±3 (Degree)	Taper	Mechanical Rotation (Degree)	Operating Torque (mN m [in-oz])	Stop Torque (N m [in-lb])	Shaft Seal	A Shaft Length (mm [in])	B Bushing Length (mm [in])		
385000M8659	10 k	10	100	4	274	312	Z	312	1-4 [7-28]	12 [1.4]	no	25,4 [1.000]	9,53 [0.375]	yes	unassembled

Dimensional Drawings (For reference only: mm [in].)

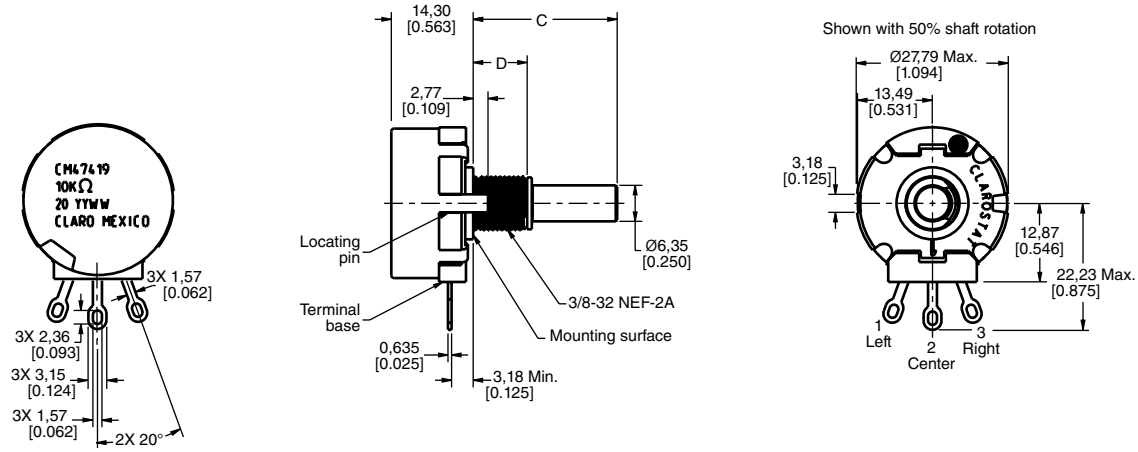

385 Series Order Guides

Table 385-E Order Guide

Catalog Listing	Electrical							Mechanical				Dimensions				RoHS Compliant	Mounting Hardware
	Resistance (Ohm)	Resistance Tolerance (±%)	End Resistance at CW, Max. (Ohm)	End Resistance at CCW, Max. (Ohm)	Effective Electrical Rotation, Typ. (Degree)	Electrical Rotation, ±3 (Degree)	Taper	Mechanical Rotation (Degree)	Operating Torque (mN m [in-oz])	Stop Torque (N m [in-lb])	Shaft Seal	A Slot Length (mm [in])	B Slot Thickness (mm [in])	C Shaft Length (mm [in])	D Bushing Length (mm [in])		
385500M9303	75	10	4	4	274	312	S-4	312	1-4 [7-28]	12 [1.4]	no	1,60 [0.063]	1,19 [0.047]	15,88 [0.625]	12,7 [0.500]	yes	unassembled

Dimensional Drawings (For reference only: mm [in].)

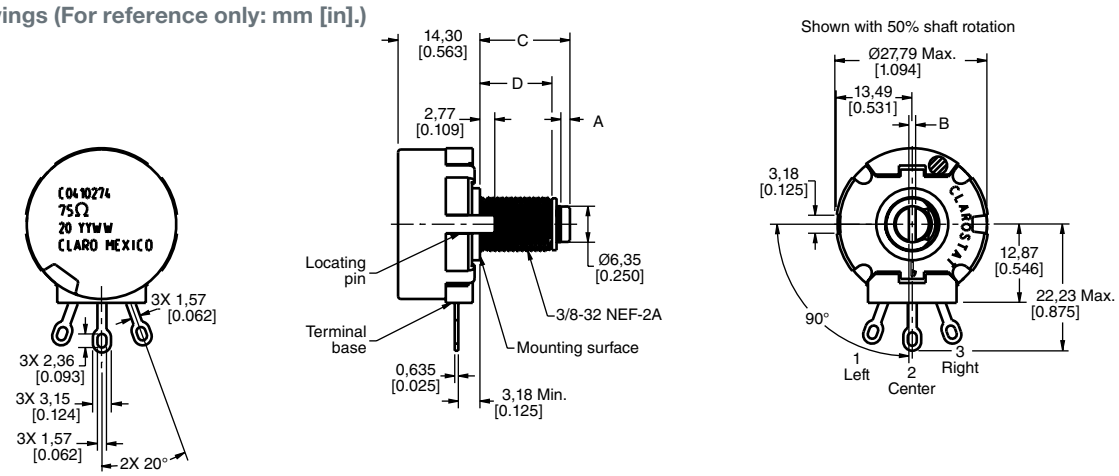

Table 385-F Order Guide

Catalog Listing	Electrical							Mechanical				Dimensions				RoHS Compliant	Mounting Hardware
	Resistance (Ohm)	Resistance Tolerance (±%)	End Resistance at CW, Max. (Ohm)	End Resistance at CCW, Max. (Ohm)	Effective Electrical Rotation, Typ. (Degree)	Electrical Rotation, ±3 (Degree)	Taper	Mechanical Rotation (Degree)	Operating Torque (mN m [in-oz])	Stop Torque (N m [in-lb])	Shaft Seal	A Slot Length (mm [in])	B Slot Thickness (mm [in])	C Shaft Length (mm [in])	D Bushing Length (mm [in])		
385500M1654	200	10	4	4	274	312	S-4	312	1-4 [7-28]	12 [1.4]	no	1,60 [0.063]	1,19 [0.047]	15,88 [0.625]	12,7 [0.500]	no	unassembled

Dimensional Drawings (For reference only: mm [in].)

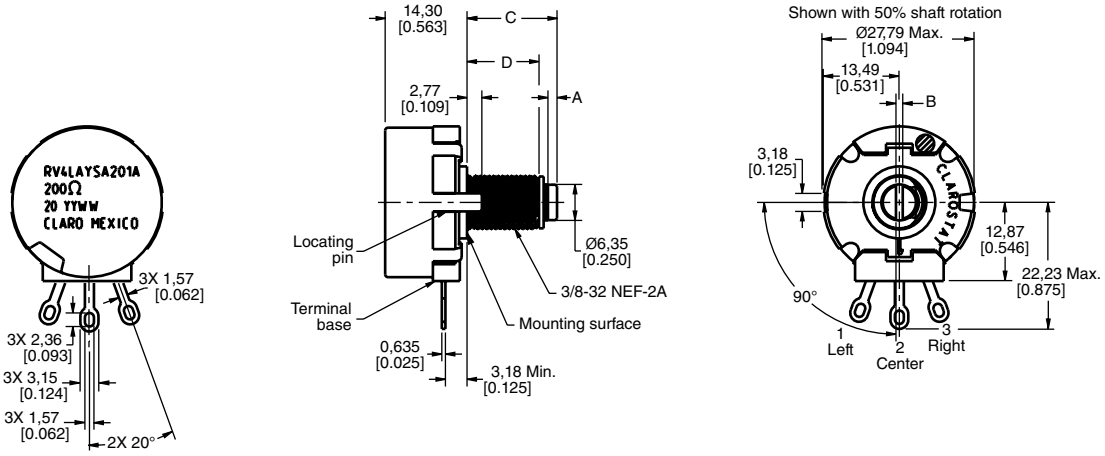

385 Series Order Guides

Table 385-G Order Guide

Catalog Listing	Electrical							Mechanical				Dimensions				RoHS Compliant	Mounting Hardware
	Resistance (Ohm)	Resistance Tolerance (±%)	End Resistance at CW, Max. (Ohm)	End Resistance at CCW, Max. (Ohm)	Effective Electrical Rotation, Typ. (Degree)	Electrical Rotation, ±3 (Degree)	Taper	Mechanical Rotation (Degree)	Operating Torque (mN m [in-oz])	Stop Torque (N m [in-lb])	Shaft Seal	A Slot Length (mm [in])	B Slot Thickness (mm [in])	C Shaft Length (mm [in])	D Bushing Length (mm [in])		
385518M0018	5 k	10	4	4	274	312	S-4	312	1-6 [7-42]	24 [2.8]	yes	1,60 [0.063]	1,19 [0.047]	15,88 [0.625]	12,7 [0.500]	no	unassembled

Dimensional Drawings (For reference only: mm [in].)

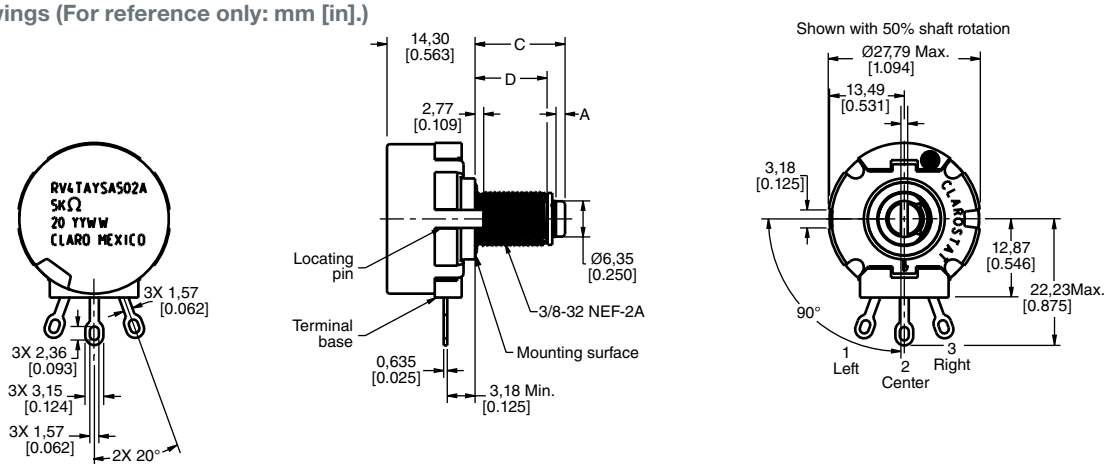

Table 385-H Order Guide

Catalog Listing	Electrical							Mechanical				Dimensions				RoHS Compliant	Mounting Hardware
	Resistance (Ohm)	Resistance Tolerance (±%)	End Resistance at CW, Max. (Ohm)	End Resistance at CCW, Max. (Ohm)	Effective Electrical Rotation, Typ. (Degree)	Electrical Rotation, ±3 (Degree)	Taper	Mechanical Rotation (Degree)	Operating Torque (mN m [in-oz])	Stop Torque (N m [in-lb])	Shaft Seal	A Slot Length (mm [in])	B Slot Thickness (mm [in])	C Shaft Length (mm [in])	D Bushing Length (mm [in])		
385000M1495	5 M	10	4	4	274	312	S-4	312	1-4 [7-28]	12 [1.4]	no	1,60 [0.063]	1,19 [0.047]	15,88 [0.625]	9,53 [0.375]	yes	unassembled
385000M6960	270	10	4	4	274	312	S-4	312	1-4 [7-28]	12 [1.4]	no	1,60 [0.063]	1,19 [0.047]	22,23 [0.875]	9,53 [0.375]	yes	unassembled

Dimensional Drawings (For reference only: mm [in].)

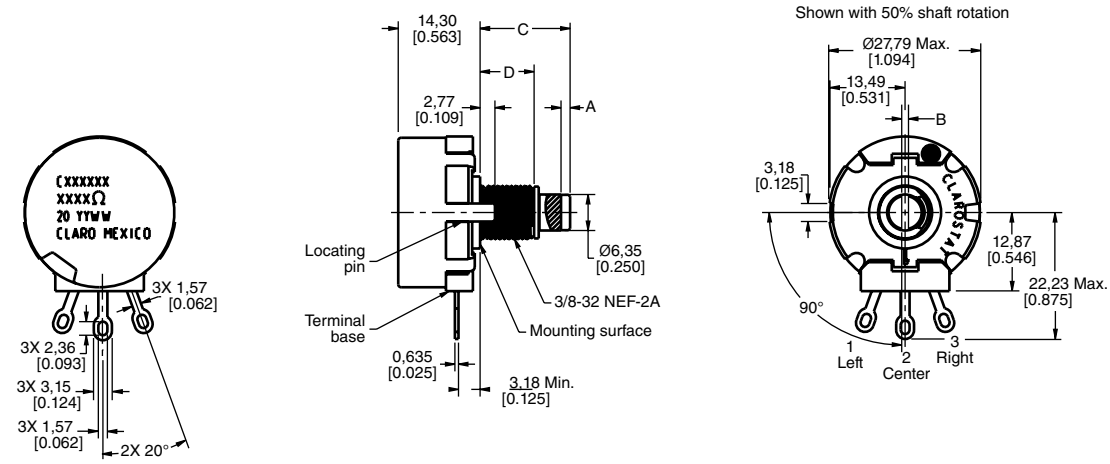

385 Series Order Guides

Table 385-I Order Guide

Catalog Listing	Electrical							Mechanical				Dimensions				RoHS Compliant	Mounting Hardware
	Resistance (Ohm)	Resistance Tolerance (±%)	End Resistance at CW, Max. (Ohm)	End Resistance at CCW, Max. (Ohm)	Effective Electrical Rotation, Typ. (Degree)	Electrical Rotation, ±3 (Degree)	Taper	Mechanical Rotation (Degree)	Operating Torque (mN m [in-oz])	Stop Torque (N m [in-lb])	Shaft Seal	A Slot Length (mm [in])	B Slot Thickness (mm [in])	C Shaft Length (mm [in])	D Bushing Length (mm [in])		
385500M0297	10 k	10	4	4	274	312	S-4	312	1-4 [7-28]	12 [1.4]	no	1,60 [0.063]	1,19 [0.047]	22,23 [0.875]	9,53 [0.375]	no	unassembled
385500M0567	1 k	10	4	4	274	312	S-4	312	1-4 [7-28]	12 [1.4]	no	1,60 [0.063]	1,19 [0.047]	22,23 [0.875]	9,53 [0.375]	no	unassembled
385500M0563	1 k	10	4	4	274	312	S-4	312	1-4 [7-28]	12 [1.4]	no	1,60 [0.063]	1,19 [0.047]	31,75 [1.25]	9,53 [0.375]	no	unassembled
385500M1231	200	10	4	4	274	312	S-4	312	1-4 [7-28]	12 [1.4]	no	1,60 [0.063]	1,19 [0.047]	22,23 [0.875]	9,53 [0.375]	no	unassembled
385500M1377	500	10	4	4	274	312	S-4	312	1-4 [7-28]	12 [1.4]	no	1,60 [0.063]	1,19 [0.047]	22,23 [0.875]	9,53 [0.375]	no	unassembled

Dimensional Drawings (For reference only: mm [in].)

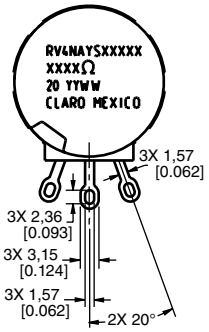

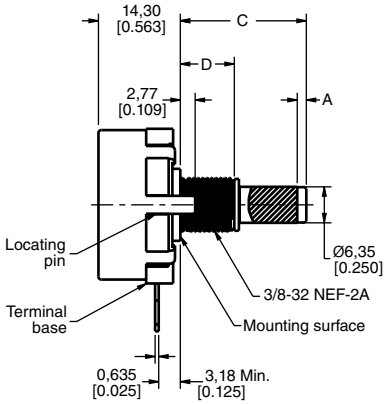

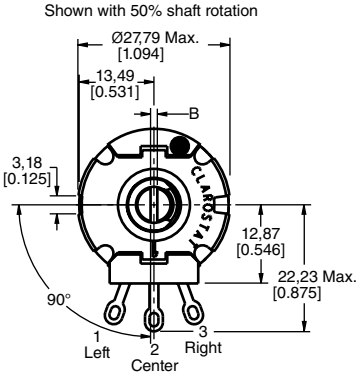

385 Series Order Guides

Table 385-J Order Guide

Catalog Listing	Electrical							Mechanical				Dimensions				RoHS Compliant	Mounting Hardware
	Resistance (Ohm)	Resistance Tolerance (±%)	End Resistance at CW, Max. (Ohm)	End Resistance at CCW, Max. (Ohm)	Effective Electrical Rotation, Typ. (Degree)	Electrical Rotation, ±3 (Degree)	Taper	Mechanical Rotation (Degree)	Operating Torque (mN m [in-oz])	Stop Torque (N m [in-lb])	Shaft Seal	A Slot Length (mm [in])	B Slot Thickness (mm [in])	C Shaft Length (mm [in])	D Bushing Length (mm [in])		
385518M0106	10 k	10	4	4	274	312	S-4	312	1-6 [7-42]	12 [1.4]	yes	1,60 [0.063]	1,19 [0.047]	12,7 [0.500]	9,53 [0.375]	no	unassembled
385518M0869	2.5 k	10	4	4	274	312	S-4	312	1-6 [7-42]	12 [1.4]	yes	1,60 [0.063]	1,19 [0.047]	22,23 [0.875]	9,53 [0.375]	no	unassembled
385518M1309	2.5 k	10	4	4	274	312	S-4	312	1-6 [7-42]	12 [1.4]	yes	1,60 [0.063]	1,19 [0.047]	12,7 [0.500]	9,53 [0.375]	no	unassembled
385518M1813	10 k	10	4	4	274	312	S-4	312	1-6 [7-42]	12 [1.4]	yes	1,60 [0.063]	1,19 [0.047]	22,23 [0.875]	9,53 [0.375]	no	unassembled
385518M2059	50 k	10	4	4	274	312	S-4	312	1-6 [7-42]	12 [1.4]	yes	1,60 [0.063]	1,19 [0.047]	12,7 [0.500]	9,53 [0.375]	no	unassembled

Dimensional Drawings (For reference only: mm [in].)

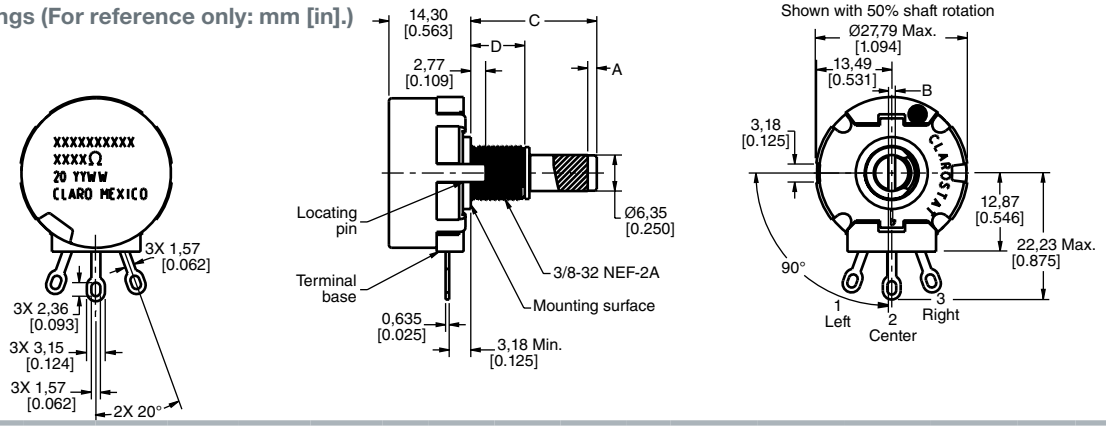

Table 385-K Order Guide

Catalog Listing	Electrical							Mechanical				Dimensions				RoHS Compliant	Mounting Hardware
	Resistance (Ohm)	Resistance Tolerance (±%)	End Resistance at CW, Max. (Ohm)	End Resistance at CCW, Max. (Ohm)	Effective Electrical Rotation, Typ. (Degree)	Electrical Rotation, ±3 (Degree)	Taper	Mechanical Rotation (Degree)	Operating Torque (mN m [in-oz])	Stop Torque (N m [in-lb])	Shaft Seal	A Slot Length (mm [in])	B Slot Thickness (mm [in])	C Shaft Length (mm [in])	D Bushing Length (mm [in])		
385000M8686	100 k	10	4	4	274	312	Z	312	1-4 [7-28]	12 [1.4]	no	1,60 [0.063]	1,19 [0.047]	22,23 [0.875]	9,53 [0.375]	yes	unassembled
385500M9553	1 M	20	10 k	10	274	312	Z	312	1-4 [7-28]	12 [1.4]	no	1,60 [0.063]	1,19 [0.047]	22,23 [0.875]	9,53 [0.375]	yes	unassembled

Dimensional Drawings (For reference only: mm [in].)

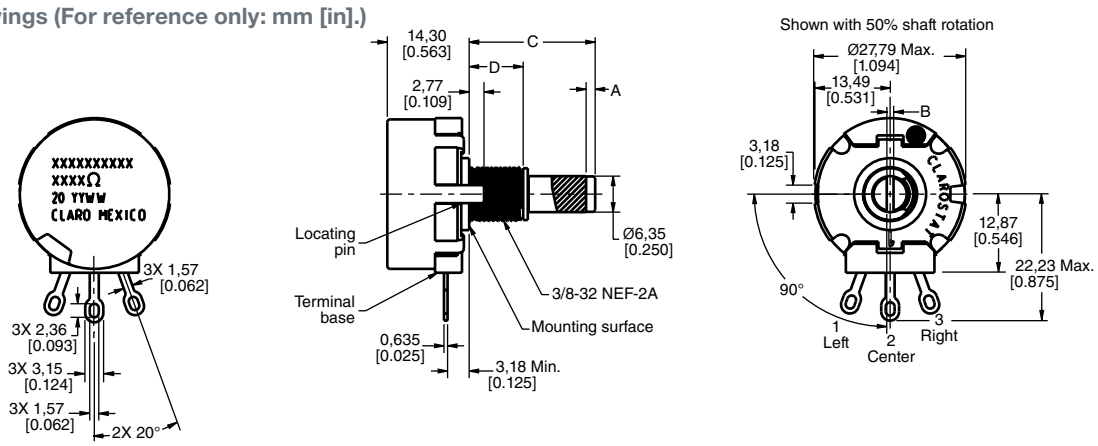

385 Series Order Guides

Table 385-L Order Guide

Catalog Listing	Electrical							Mechanical				Dimensions				RoHS Compliant	Mounting Hardware
	Resistance (Ohm)	Resistance Tolerance (±%)	End Resistance at CW, Max. (Ohm)	End Resistance at CCW, Max. (Ohm)	Effective Electrical Rotation, Typ. (Degree)	Electrical Rotation, ±3 (Degree)	Taper	Mechanical Rotation (Degree)	Operating Torque (mN m [in-oz])	Stop Torque (N m [in-lb])	Shaft Seal	A Slot Length (mm [in])	B Slot Thickness (mm [in])	C Shaft Length (mm [in])	D Bushing Length (mm [in])		
385500M1246	250 k	10	2.5 k	10	274	312	Z	312	1-4 [7-28]	12 [1.4]	no	1,60 [0.063]	1,19 [0.047]	22,23 [0.875]	9,53 [0.375]	no	unassembled

Dimensional Drawings (For reference only: mm [in].)

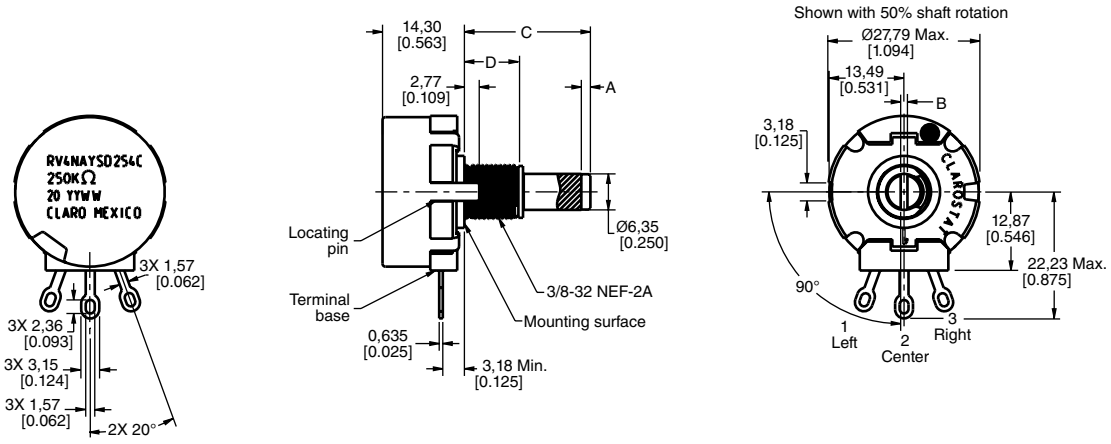

ADDITIONAL INFORMATION

The following associated literature is available at sensing.honeywell.com:

- Product Range Guide
- Product Line Guide
- Installation Instructions

Find out more

Honeywell serves its customers through a worldwide network of sales offices, representatives and distributors. For application assistance, current specifications, pricing or name of the nearest Authorized Distributor, contact your local sales office.

To learn more about Honeywell's sensing and control products, call **+1-815-235-6847 or 1-800-537-6945**, visit **sensing.honeywell.com,** or e-mail inquiries to **info.sc@honeywell.com**

Sensing and Control
Honeywell
1985 Douglas Drive North
Golden Valley, MN 55422
honeywell.com

⚠ WARNING
PERSONAL INJURY

DO NOT USE these products as safety or emergency stop devices or in any other application where failure of the product could result in personal injury.

Failure to comply with these instructions could result in death or serious injury.

⚠ WARNING
MISUSE OF DOCUMENTATION

- The information presented in this product sheet is for reference only. Do not use this document as a product installation guide.
- Complete installation, operation, and maintenance information is provided in the instructions supplied with each product.

Failure to comply with these instructions could result in death or serious injury.

WARRANTY/REMEDY

Honeywell warrants goods of its manufacture as being free of defective materials and faulty workmanship. Honeywell's standard product warranty applies unless agreed to otherwise by Honeywell in writing; please refer to your order acknowledgement or consult your local sales office for specific warranty details. If warranted goods are returned to Honeywell during the period of coverage, Honeywell will repair or replace, at its option, without charge those items it finds defective. **The foregoing is buyer's sole remedy and is in lieu of all other warranties, expressed or implied, including those of merchantability and fitness for a particular purpose. In no event shall Honeywell be liable for consequential, special, or indirect damages.**

While we provide application assistance personally, through our literature and the Honeywell website, it is up to the customer to determine the suitability of the product in the application.

Specifications may change without notice. The information we supply is believed to be accurate and reliable as of this printing. However, we assume no responsibility for its use.

Honeywell

32301266-A-EN IL5O
October 2014
© 2014 Honeywell International Inc. All rights reserved.

Общество с ограниченной ответственностью «МосЧип» ИНН 7719860671 / КПП 771901001
Адрес: 105318, г.Москва, ул.Щербаковская д.3, офис 1107

Данный компонент на территории Российской Федерации

Вы можете приобрести в компании MosChip.

Для оперативного оформления запроса Вам необходимо перейти по данной ссылке:

http://moschip.ru/get-element

Вы можете разместить у нас заказ для любого Вашего проекта, будь то серийное производство или разработка единичного прибора.

В нашем ассортименте представлены ведущие мировые производители активных и пассивных электронных компонентов.

Нашей специализацией является поставка электронной компонентной базы двойного назначения, продукции таких производителей как XILINX, Intel (ex.ALTERA), Vicor, Microchip, Texas Instruments, Analog Devices, Mini-Circuits, Amphenol, Glenair.

Сотрудничество с глобальными дистрибьюторами электронных компонентов, предоставляет возможность заказывать и получать с международных складов практически любой перечень компонентов в оптимальные для Вас сроки.

На всех этапах разработки и производства наши партнеры могут получить квалифицированную поддержку опытных инженеров.

Система менеджмента качества компании отвечает требованиям в соответствии с ГОСТ Р ИСО 9001, ГОСТ РВ 0015-002 и ЭС РД 009

Офис по работе с юридическими лицами:

105318, г.Москва, ул.Щербаковская д.3, офис 1107, 1118, ДЦ «Щербаковский»

Телефон: +7 495 668-12-70 (многоканальный)

Факс: +7 495 668-12-70 (доб.304)

E-mail: info@moschip.ru

Skype отдела продаж:
moschip.ru
moschip.ru_4
moschip.ru_6
moschip.ru_9