Intel® Stratix® 10 GX/SX Device Overview

Subscribe
Send Feedback

S10-OVERVIEW | 2019.08.19
Latest document on the web: PDF | HTML

Contents

1. Intel® Stratix® 10 GX/SX Device Overview 3
1.1. Intel Stratix 10 GX/SX Family Variants 4
1.1.1. Available Options 6
1.2. Innovations in Intel Stratix 10 FPGAs and SoCs 6
1.3. FPGA and SoC Features Summary 8
1.4. Intel Stratix 10 Block Diagram 11
1.5. Intel Stratix 10 FPGA and SoC Family Plan 11
1.6. Intel Hyperflex Core Architecture 14
1.7. Heterogeneous 3D SiP Transceiver Tiles 15
1.8. Intel Stratix 10 Transceivers 16
1.8.1. PMA Features 17
1.8.2. PCS Features 19
1.9. PCI Express Gen1/Gen2/Gen3 Hard IP 20
1.10. Interlaken PCS Hard IP 20
1.11. 10G Ethernet Hard IP 21
1.12. External Memory and General Purpose I/O 21
1.13. Adaptive Logic Module (ALM) 22
1.14. Core Clocking 23
1.15. Fractional Synthesis PLLs and I/O PLLs 24
1.16. Internal Embedded Memory 24
1.17. Variable Precision DSP Block 24
1.18. Hard Processor System (HPS) 27
1.18.1. Key Features of the Intel Stratix 10 HPS 28
1.19. Power Management 31
1.20. Device Configuration and Secure Device Manager (SDM) 31
1.21. Device Security 33
1.22. Configuration via Protocol Using PCI Express 33
1.23. Partial and Dynamic Reconfiguration 34
1.24. Fast Forward Compile 34
1.25. Single Event Upset (SEU) Error Detection and Correction 34
1.26. Document Revision History for the Intel Stratix 10 GX/SX Device Overview 35

1. Intel® Stratix® 10 GX/SX Device Overview

Intel's 14 nm Intel® Stratix® 10 GX FPGAs and SX SoCs deliver 2X the core performance and up to 70% lower power over previous generation high-performance FPGAs.

Featuring several groundbreaking innovations, including the all new Intel Hyperflex™ core architecture, this device family enables you to meet the demand for ever-increasing bandwidth and processing performance in your most advanced applications, while meeting your power budget.

With an embedded hard processor system (HPS) based on a quad-core 64 bit Arm* Cortex*-A53, the Intel Stratix 10 SoC devices deliver power efficient, application-class processing and allow designers to extend hardware virtualization into the FPGA fabric. Intel Stratix 10 SoC devices demonstrate Intel's commitment to high-performance SoCs and extend Intel's leadership in programmable devices featuring an Arm-based processor system.

Important innovations in Intel Stratix 10 FPGAs and SoCs include:

- All new Intel Hyperflex core architecture delivering 2X the core performance compared to previous generation high-performance FPGAs
- Intel 14 nm tri-gate (FinFET) technology
- Heterogeneous 3D System-in-Package (SiP) technology
- Monolithic core fabric with up to 2.8 million logic elements (LEs)
- Up to 96 full duplex transceiver channels on heterogeneous 3D SiP transceiver tiles
- Transceiver data rates up to 28.3 Gbps chip-to-chip/module and backplane performance
- M20K (20 Kb) internal SRAM memory blocks
- Fractional synthesis and ultra-low jitter LC tank based transmit phase locked loops (PLLs)
- Hard PCI Express® Gen3 x16 intellectual property (IP) blocks
- Hard 10GBASE-KR/40GBASE-KR4 Forward Error Correction (FEC) in every transceiver channel
- Hard memory controllers and PHY supporting DDR4 rates up to 2666 Mbps per pin
- Hard fixed-point and IEEE 754 compliant hard floating-point variable precision digital signal processing (DSP) blocks with up to 10 TFLOP compute performance with a power efficiency of 80 GFLOP per Watt
- Quad-core 64 bit Arm Cortex-A53 embedded processor running up to 1.5 GHz in SoC family variants
- Programmable clock tree synthesis for flexible, low power, low skew clock trees

Intel Corporation. All rights reserved. Agilex, Altera, Arria, Cyclone, Enpirion, Intel, the Intel logo, MAX, Nios, Quartus and Stratix words and logos are trademarks of Intel Corporation or its subsidiaries in the U.S. and/or other countries. Intel warrants performance of its FPGA and semiconductor products to current specifications in accordance with Intel's standard warranty, but reserves the right to make changes to any products and services at any time without notice. Intel assumes no responsibility or liability arising out of the application or use of any information, product, or service described herein except as expressly agreed to in writing by Intel. Intel customers are advised to obtain the latest version of device specifications before relying on any published information and before placing orders for products or services.
*Other names and brands may be claimed as the property of others.

ISO 9001:2015 Registered

- Dedicated secure device manager (SDM) for:
  - Enhanced device configuration and security
  - AES-256, SHA-256/384 and ECDSA-256/384 encrypt/decrypt accelerators and authentication
  - Multi-factor authentication
  - Physically Unclonable Function (PUF) service and software programmable device configuration capability
- Comprehensive set of advanced power saving features delivering up to 70% lower power compared to previous generation high-performance FPGAs
- Non-destructive register state readback and writeback, to support ASIC prototyping and other applications

With these capabilities, Intel Stratix 10 FPGAs and SoCs are ideally suited for the most demanding applications in diverse markets such as:

- **Compute and Storage**—for custom servers, cloud computing and data center acceleration
- **Networking**—for Terabit, 400G and multi-100G bridging, aggregation, packet processing and traffic management
- **Optical Transport Networks**—for OTU4, 2xOTU4, 4xOTU4
- **Broadcast**—for high-end studio distribution, head end encoding/decoding, edge quadrature amplitude modulation (QAM)
- **Military**—for radar, electronic warfare, and secure communications
- **Medical**—for diagnostic scanners and diagnostic imaging
- **Test and Measurement**—for protocol and application testers
- **Wireless**—for next-generation 5G networks
- **ASIC Prototyping**—for designs that require the largest monolithic FPGA fabric with the highest I/O count

1.1. Intel Stratix 10 GX/SX Family Variants

Intel Stratix 10 devices are available in FPGA (GX) and SoC (SX) variants.

- **Intel Stratix 10 GX** devices deliver up to 1 GHz core fabric performance and contain up to 2.8 million LEs in a monolithic fabric. They also feature up to 96 general purpose transceivers on separate transceiver tiles, and 2666 Mbps DDR4 external memory interface performance. The transceivers are capable of up to 28.3 Gbps short reach and across the backplane. These devices are optimized for FPGA applications that require the highest transceiver bandwidth and core fabric performance, with the power efficiency of Intel's 14 nm tri-gate process technology.
- **Intel Stratix 10 SX** devices have a feature set that is identical to Intel Stratix 10 GX devices, with the addition of an embedded quad-core 64 bit Arm Cortex A53 hard processor system.

Common to all Intel Stratix 10 family variants is a high-performance fabric based on the new Intel Hyperflex core architecture that includes additional Hyper-Registers throughout the interconnect routing and at the inputs of all functional blocks. The core fabric also contains an enhanced logic array utilizing Intel's adaptive logic module (ALM) and a rich set of high performance building blocks including:

- M20K (20 Kb) embedded memory blocks
- Variable precision DSP blocks with hard IEEE 754 compliant floating-point units
- Fractional synthesis and integer PLLs
- Hard memory controllers and PHY for external memory interfaces
- General purpose IO cells

To clock these building blocks, Intel Stratix 10 devices use programmable clock tree synthesis, which uses dedicated clock tree routing to synthesize only those branches of the clock trees required for the application. All devices support in-system, fine-grained partial reconfiguration of the logic array, allowing logic to be added and subtracted from the system while it is operating.

All family variants also contain high speed serial transceivers, containing both the physical medium attachment (PMA) and the physical coding sublayer (PCS), which can be used to implement a variety of industry standard and proprietary protocols. In addition to the hard PCS, Intel Stratix 10 devices contain multiple instantiations of PCI Express hard IP that supports Gen1/Gen2/Gen3 rates in x1/x2/x4/x8/x16 lane configurations, and hard 10GBASE-KR/40GBASE-KR4 FEC for every transceiver. The hard PCS, FEC, and PCI Express IP free up valuable core logic resources, save power, and increase your productivity.

1.1.1. Available Options

Figure 1. Sample Ordering Code and Available Options for Intel Stratix 10 Devices

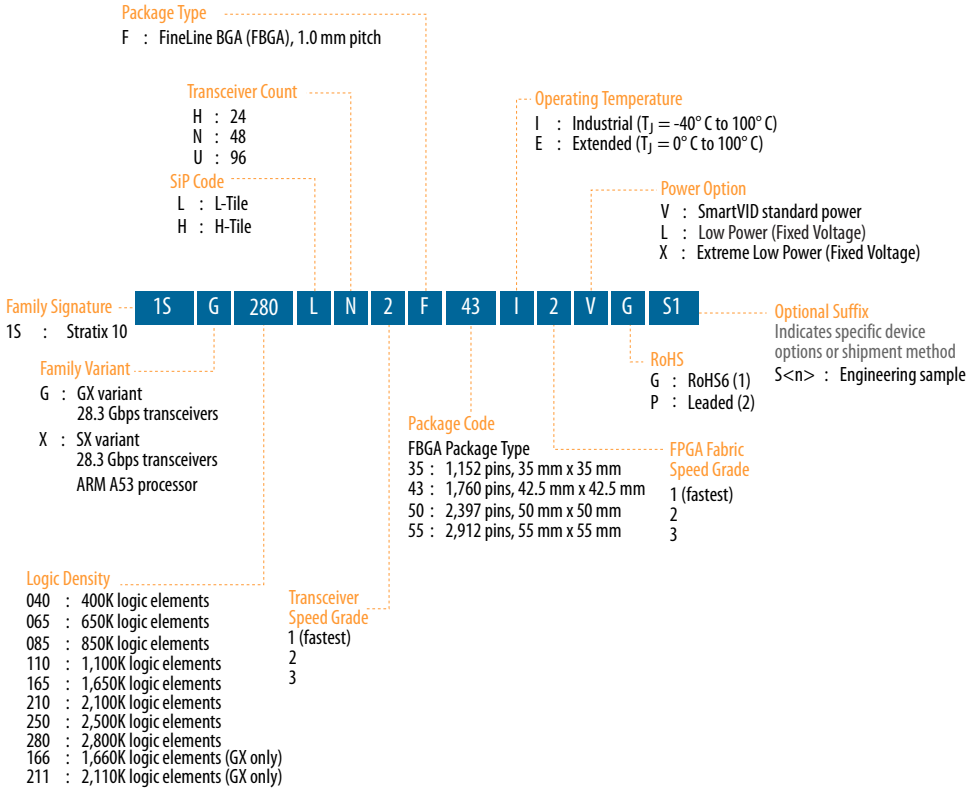

Note:
1. Lead-free RoHS6 devices use SAC405 solder balls, 95.5% Tin, 4.0% Silver, and 0.5% Copper.
2. Leaded devices use eutectic solder balls, 63% Tin and 37% Lead. Contact Intel for availability.

1.2. Innovations in Intel Stratix 10 FPGAs and SoCs

Intel Stratix 10 FPGAs and SoCs deliver many significant improvements over the previous generation high-performance Stratix V FPGAs.

Table 1. Key Features of Intel Stratix 10 Devices Compared to Stratix V Devices

Feature	Stratix V FPGAs	Intel Stratix 10 FPGAs and SoCs
Process technology	28 nm TSMC (planar transistor)	14 nm Intel tri-gate (FinFET)
Hard processor core	None	Quad-core 64 bit Arm Cortex-A53 (SoC only)
Core architecture	Conventional core architecture with conventional interconnect	Intel Hyperflex core architecture with Hyper-Registers in the interconnect
Core performance	500 MHz	1 GHz
Power dissipation	1x	As low as 0.3x

continued...

Feature	Stratix V FPGAs	Intel Stratix 10 FPGAs and SoCs
Logic density	952 KLE (monolithic)	2,800 KLE (monolithic)
Embedded memory (M20K)	52 Mbits	229 Mbits
18x19 multipliers	3,926 *Note:* Multiplier is 18x18 in Stratix V devices.	11,520 *Note:* Multiplier is 18x19 in Intel Stratix 10 devices.
Floating point DSP capability	Up to 1 TFLOP, requires soft floating point adder and multiplier	Up to 10 TFLOP, hard IEEE 754 compliant single precision floating point adder and multiplier
Maximum transceivers	66	96
Maximum transceiver data rate (chip-to-chip)	28.05 Gbps	28.3 Gbps L-Tile 28.3 Gbps H-Tile
Maximum transceiver data rate (backplane)	12.5 Gbps	12.5 Gbps L-Tile 28.3 Gbps H-Tile
Hard memory controller	None	DDR4 @ 1333 MHz/2666 Mbps DDR3 @ 1067 MHz/2133 Mbps
Hard protocol IP	PCIe* Gen3 x8 (up to 4 instances)	PCIe Gen3 x16 (up to 4 instances) SR-IOV (4 physical functions / 2k virtual functions) on H-Tile devices 10GBASE-KR/40GBASE-KR4 FEC
Core clocking and PLLs	Global, quadrant and regional clocks supported by fractional-synthesis fPLLs	Programmable clock tree synthesis supported by fractional synthesis fPLLs and integer IO PLLs
Register state readback and writeback	Not available	Non-destructive register state readback and writeback for ASIC prototyping and other applications

These innovations result in the following improvements:

- **Improved Core Logic Performance**: The Intel Hyperflex core architecture combined with 14 nm Intel tri-gate technology allows Intel Stratix 10 devices to achieve 2X the core performance compared to the previous generation
- **Lower Power**: Intel Stratix 10 devices use up to 70% lower power compared to the previous generation, enabled by 14 nm Intel tri-gate technology, the Intel Hyperflex core architecture, and optional power saving features built into the architecture
- **Higher Density**: Intel Stratix 10 devices offer three times the level of integration, with up to 2,800K logic elements (LEs) in a monolithic fabric, over 229 Mbits of embedded memory blocks (M20K), and 11,520 18x19 multipliers
- **Embedded Processing**: Intel Stratix 10 SoCs feature a Quad-Core 64 bit Arm Cortex-A53 processor optimized for power efficiency and software compatible with previous generation Arria® and Cyclone® SoC devices
- **Improved Transceiver Performance**: With up to 96 transceiver channels implemented in heterogeneous 3D SiP transceiver tiles, Intel Stratix 10 GX and SX devices support data rates up to 28.3 Gbps chip-to-chip and 28.3 Gbps across the backplane with signal conditioning circuits capable of equalizing over 30 dB of system loss
- **Improved DSP Performance**: The variable precision DSP block in Intel Stratix 10 devices features hard fixed and floating point capability, with up to 10 TFLOP IEEE754 single-precision floating point performance

- **Additional Hard IP**: Intel Stratix 10 devices include many more hard IP blocks than previous generation devices, with a hard memory controller included in each bank of 48 general purpose IOs, a hard PCIe Gen3 x16 full protocol stack in each transceiver tile, and a hard 10GBASE-KR/40GBASE-KR4 FEC in every transceiver channel
- **Enhanced Core Clocking**: Intel Stratix 10 devices feature programmable clock tree synthesis; clock trees are only synthesized where needed, increasing the flexibility and reducing the power dissipation of the clocking solution
- **Additional Core PLLs**: The core fabric in Intel Stratix 10 devices is supported by both integer IO PLLs and fractional synthesis fPLLs, resulting in a greater total number of PLLs available than the previous generation

1.3. FPGA and SoC Features Summary

Table 2. Intel Stratix 10 FPGA and SoC Common Device Features

Feature	Description
Technology	• 14 nm Intel tri-gate (FinFET) process technology • SmartVID controlled core voltage, standard power devices • 0.85-V fixed core voltage, low static power devices available
Low power serial transceivers	• Up to 96 total transceivers available • Continuous operating range of 1 Gbps to 28.3 Gbps for Intel Stratix 10 GX/SX devices • Backplane support up to 28.3 Gbps for Intel Stratix 10 GX/SX devices • Extended range down to 125 Mbps with oversampling • ATX transmit PLLs with user-configurable fractional synthesis capability • XFP, SFP+, QSFP/QSFP28, CFP/CFP2/CFP4 optical module support • Adaptive linear and decision feedback equalization • Transmit pre-emphasis and de-emphasis • Dynamic partial reconfiguration of individual transceiver channels • On-chip instrumentation (Eye Viewer non-intrusive data eye monitoring)
General purpose I/Os	• Up to 1160 total GPIO available • 1.6 Gbps LVDS—every pair can be configured as an input or output • 1333 MHz/2666 Mbps DDR4 external memory interface • 1067 MHz/2133 Mbps DDR3 external memory interface • 1.2 V to 3.0 V single-ended LVCMOS/LVTTL interfacing • On-chip termination (OCT)
Embedded hard IP	• PCIe Gen1/Gen2/Gen3 complete protocol stack, x1/x2/x4/x8/x16 end point and root port • DDR4/DDR3 hard memory controller (RLDRAM3/QDR II+/QDR IV using soft memory controller) • Multiple hard IP instantiations in each device • Single Root I/O Virtualization (SR-IOV)
Transceiver hard IP	• 10GBASE-KR/40GBASE-KR4 Forward Error Correction (FEC) • 10G Ethernet PCS • PCI Express PIPE interface • Interlaken PCS • Gigabit Ethernet PCS • Deterministic latency support for Common Public Radio Interface (CPRI) PCS • Fast lock-time support for Gigabit Passive Optical Networking (GPON) PCS • 8B/10B, 64B/66B, 64B/67B encoders and decoders • Custom mode support for proprietary protocols

continued...

Feature	Description
Power management	• SmartVID controlled core voltage, standard power devices • 0.85-V fixed core voltage, low static power devices available • Intel Quartus® Prime Pro Edition integrated power analysis
High performance monolithic core fabric	• Intel Hyperflex core architecture with Hyper-Registers throughout the interconnect routing and at the inputs of all functional blocks • Monolithic fabric minimizes compile times and increases logic utilization • Enhanced adaptive logic module (ALM) • Improved multi-track routing architecture reduces congestion and improves compile times • Hierarchical core clocking architecture with programmable clock tree synthesis • Fine-grained partial reconfiguration
Internal memory blocks	• M20K—20 Kb with hard ECC support • MLAB—640 bit distributed LUTRAM
Variable precision DSP blocks	• IEEE 754-compliant hard single-precision floating point capability • Supports signal processing with precision ranging from 18x19 up to 54x54 • Native 27x27 and 18x19 multiply modes • 64 bit accumulator and cascade for systolic FIRs • Internal coefficient memory banks • Pre-adder/subtractor improves efficiency • Additional pipeline register increases performance and reduces power
Phase locked loops (PLL)	• Fractional synthesis PLLs (fPLL) support both fractional and integer modes • Fractional mode with third-order delta-sigma modulation • Precision frequency synthesis • Integer PLLs adjacent to general purpose I/Os, support external memory, and LVDS interfaces, clock delay compensation, zero delay buffering
Core clock networks	• 1 GHz fabric clocking • 667 MHz external memory interface clocking, supports 2666 Mbps DDR4 interface • 800 MHz LVDS interface clocking, supports 1600 Mbps LVDS interface • Programmable clock tree synthesis, backwards compatible with global, regional and peripheral clock networks • Clocks only synthesized where needed, to minimize dynamic power

continued...

Feature	Description
Configuration	• Dedicated Secure Device Manager • Software programmable device configuration • Serial and parallel flash interface • Configuration via protocol (CvP) using PCI Express Gen1/Gen2/Gen3 • Fine-grained partial reconfiguration of core fabric • Dynamic reconfiguration of transceivers and PLLs • Comprehensive set of security features including AES-256, SHA-256/384, and ECDSA-256/384 accelerators, and multi-factor authentication • Physically Unclonable Function (PUF) service
Packaging	• Intel Embedded Multi-die Interconnect Bridge (EMIB) packaging technology • Multiple devices with identical package footprints allows seamless migration across different device densities • 1.0 mm ball-pitch FBGA packaging • Lead and lead-free package options
Software and tools	• Intel Quartus Prime Pro Edition design suite with new compiler and Hyper-Aware design flow • Fast Forward compiler to allow Intel Hyperflex architecture performance exploration • Transceiver toolkit • Platform designer integration tool • DSP Builder advanced blockset • OpenCL™ support • SoC Embedded Design Suite (EDS)

Table 3. Intel Stratix 10 SoC Specific Device Features

SoC Subsystem	Feature	Description
Hard Processor System	Multi-processor unit (MPU) core	• Quad-core Arm Cortex-A53 MPCore processor with Arm CoreSight* debug and trace technology • Scalar floating-point unit supporting single and double precision • Arm Neon* media processing engine for each processor
	System Controllers	• System Memory Management Unit (SMMU) • Cache Coherency Unit (CCU)
	Layer 1 Cache	• 32 KB L1 instruction cache with parity • 32 KB L1 data cache with ECC
	Layer 2 Cache	• 1 MB Shared L2 Cache with ECC
	On-Chip Memory	• 256 KB On-Chip RAM
	Direct memory access (DMA) controller	• 8-Channel DMA
	Ethernet media access controller (EMAC)	• Three 10/100/1000 EMAC with integrated DMA
	USB On-The-Go controller (OTG)	• 2 USB OTG with integrated DMA
	UART controller	• 2 UART 16550 compatible
	Serial Peripheral Interface (SPI) controller	• 4 SPI
	I^2C controller	• 5 I^2C controllers
	SD/SDIO/MMC controller	• 1 eMMC version 4.5 with DMA and CE-ATA support • SD, including eSD, version 3.0 • SDIO, including eSDIO, version 3.0 • CE-ATA - version 1.1

continued...

SoC Subsystem	Feature	Description
	NAND flash controller	• 1 ONFI 1.0, 8- and 16-bit support
	General-purpose I/O (GPIO)	• Maximum of 48 software programmable GPIO
	Timers	• 4 general-purpose timers • 4 watchdog timers
Secure Device Manager	Security	• Secure boot • Advanced Encryption Standard (AES) and authentication (SHA/ECDSA)
External Memory Interface	External Memory Interface	• Hard Memory Controller with DDR4 and DDR3

1.4. Intel Stratix 10 Block Diagram

Figure 2. Intel Stratix 10 FPGA and SoC Architecture Block Diagram

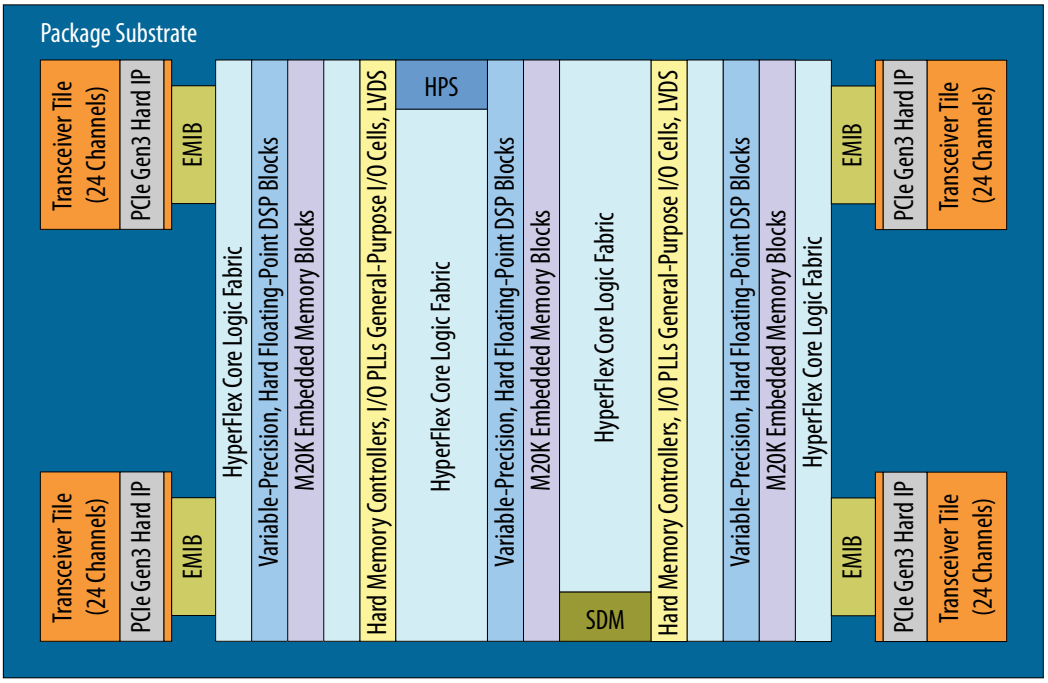

HPS: Quad ARM Cortex-A53 Hard Processor System
SDM: Secure Device Manager
EMIB: Embedded Multi-Die Interconnect Bridge

1.5. Intel Stratix 10 FPGA and SoC Family Plan

(1) The number of 27x27 multipliers is one-half the number of 18x19 multipliers.

Table 4. Intel Stratix 10 GX/SX FPGA and SoC Family Plan—FPGA Core (part 1)

Intel Stratix 10 GX/SX Device Name	Logic Elements (KLE)	M20K Blocks	M20K Mbits	MLAB Counts	MLAB Mbits	18x19 Multi-pliers (1)
GX 400/ SX 400	378	1,537	30	3,276	2	1,296
GX 650/ SX 650	612	2,489	49	5,364	3	2,304
GX 850/ SX 850	841	3,477	68	7,124	4	4,032
GX 1100/ SX 1100	1,325	5,461	107	11,556	7	5,184
GX 1650/ SX 1650	1,624	5,851	114	13,764	8	6,290
GX 2100/ SX 2100	2,005	6,501	127	17,316	11	7,488
GX 2500/ SX 2500	2,422	9,963	195	20,529	13	10,022
GX 2800/ SX 2800	2,753	11,721	229	23,796	15	11,520
GX 1660	1,679	6,162	120	14,230	9	6,652
GX 2110	2,073	6,847	134	17,856	11	7,920

Table 5. Intel Stratix 10 GX/SX FPGA and SoC Family Plan—Interconnects, PLLs and Hard IP (part 2)

Intel Stratix 10 GX/SX Device Name	Interconnects		PLLs		Hard IP
	Maximum GPIOs	Maximum XCVR	fPLLs	I/O PLLs	PCIe Hard IP Blocks
GX 400/ SX 400	392	24	8	8	1
GX 650/ SX 650	392	24	8	8	1
GX 850/ SX 850	688	48	16	16	2
GX 1100/ SX 1100	688	48	16	16	2
GX 1650/ SX 1650	704	96	32	24	4
GX 2100/ SX 2100	704	96	32	24	4
GX 2500/ SX 2500	1,160	96	32	24	4
GX 2800/	1,160	96	32	24	4

continued...

Intel Stratix 10 GX/SX Device Name	Interconnects		PLLs		Hard IP
	Maximum GPIOs	Maximum XCVR	fPLLs	I/O PLLs	PCIe Hard IP Blocks
SX 2800					
GX 1660	688	48	16	16	2
GX 2110	688	48	16	16	2

Table 6. Intel Stratix 10 GX/SX FPGA and SoC Family Package Plan

Cell legend: General Purpose I/Os, High-Voltage I/Os, LVDS Pairs, Transceivers (2) (3) (4) (5) (6) (7)

Intel Stratix 10 GX/SX Device Name	F1152 HF35 (35x35 mm²)	F1760 NF43 (42.5x42.5 mm²)	F2397 UF50 (50x50 mm²)	F2912 HF55 (55x55 mm²)
GX 400/ SX 400	392, 8, 192, 24	-	-	-
GX 650/ SX 650	392, 8, 192, 24	-	-	-
GX 850/ SX 850	-	688, 16, 336, 48	-	-
GX 1100/ SX 1100	-	688, 16, 336, 48	-	-
GX 1650/ SX 1650	-	688, 16, 336, 48	704, 32, 336, 96	-
GX 2100/ SX 2100	-	688, 16, 336, 48	704, 32, 336, 96	-
GX 2500/ SX 2500	-	688, 16, 336, 48	704, 32, 336, 96	1160, 8, 576, 24
GX 2800/ SX 2800	-	688, 16, 336, 48	704, 32, 336, 96	1160, 8, 576, 24
GX 1660	-	688, 16, 336, 48	-	-
GX 2110	-	688, 16, 336, 48	-	-

(2) All packages are ball grid arrays with 1.0 mm pitch.

(3) High-Voltage I/O pins are used for 3 V and 2.5 V interfacing.

(4) Each LVDS pair can be configured as either a differential input or a differential output.

(5) High-Voltage I/O pins and LVDS pairs are included in the General Purpose I/O count. Transceivers are counted separately.

(6) Each package column offers pin migration (common circuit board footprint) for all devices in the column.

(7) Intel Stratix 10 GX devices are pin migratable with Intel Stratix 10 SX devices in the same package.

1.6. Intel Hyperflex Core Architecture

Intel Stratix 10 FPGAs and SoCs are based on a monolithic core fabric featuring the new Intel Hyperflex core architecture. The Intel Hyperflex core architecture delivers 2X the clock frequency performance and up to 70% lower power compared to previous generation high-end FPGAs. Along with this performance breakthrough, the Intel Hyperflex core architecture delivers a number of advantages including:

- **Higher Throughput**—Capitalizes on 2X core clock frequency performance to obtain throughput breakthroughs
- **Improved Power Efficiency**—Uses reduced IP size, enabled by Intel Hyperflex, to consolidate designs which previously spanned multiple devices into a single device, thereby reducing power by up to 70% versus previous generation devices
- **Greater Design Functionality**—Uses faster clock frequency to reduce bus widths and reduce IP size, freeing up additional FPGA resources to add greater functionality
- **Increased Designer Productivity**—Boosts performance with less routing congestion and fewer design iterations using Hyper-Aware design tools, obtaining greater timing margin for more rapid timing closure

In addition to the traditional user registers found in the Adaptive Logic Modules (ALM), the Intel Hyperflex core architecture introduces additional bypassable registers everywhere throughout the fabric of the FPGA. These additional registers, called Hyper-Registers are available on every interconnect routing segment and at the inputs of all functional blocks.

Figure 3. Bypassable Hyper-Register

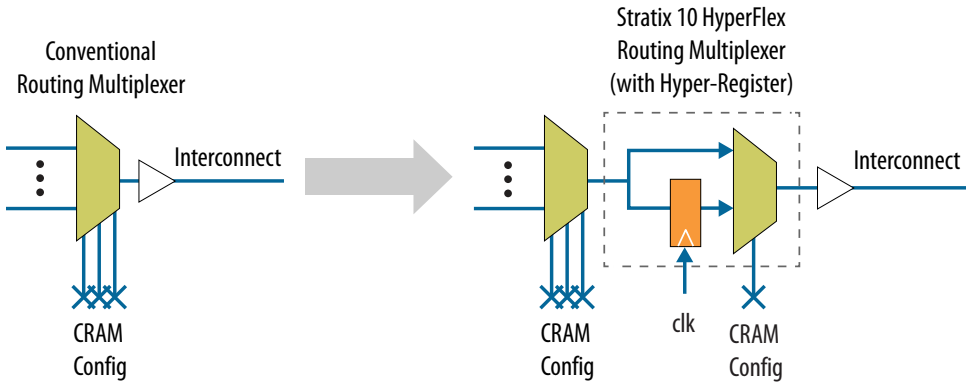

The Hyper-Registers enable the following key design techniques to achieve the 2X core performance increases:

- Fine grain Hyper-Retiming to eliminate critical paths
- Zero latency Hyper-Pipelining to eliminate routing delays
- Flexible Hyper-Optimization for best-in-class performance

By implementing these techniques in your design, the Hyper-Aware design tools automatically make use of the Hyper-Registers to achieve maximum core clock frequency.

Figure 4. Intel Hyperflex Core Architecture

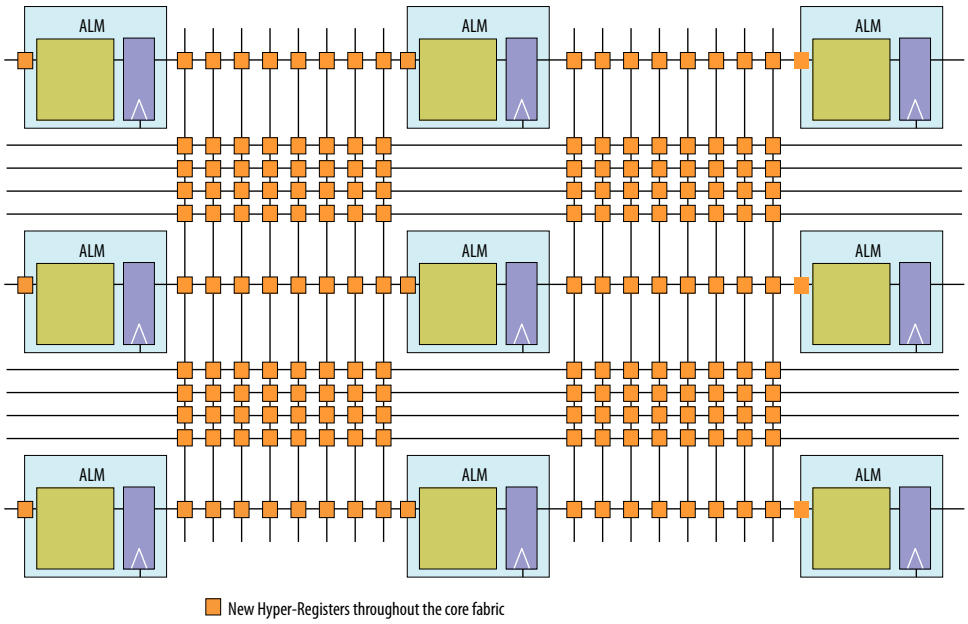

1.7. Heterogeneous 3D SiP Transceiver Tiles

Intel Stratix 10 FPGAs and SoCs feature power efficient, high bandwidth, low latency transceivers. The transceivers are implemented on heterogeneous 3D System-in-Package (SiP) transceiver tiles, each containing 24 full-duplex transceiver channels. In addition to providing a high-performance transceiver solution to meet current connectivity needs, this allows for future flexibility and scalability as data rates, modulation schemes, and protocol IPs evolve.

Figure 5. Monolithic Core Fabric and Heterogeneous 3D SiP Transceiver Tiles

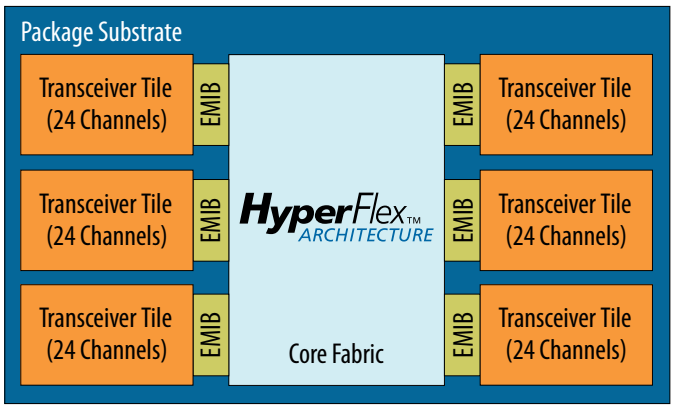

Each transceiver tile contains:

- 24 full-duplex transceiver channels (PMA and PCS)
- Reference clock distribution network
- Transmit PLLs
- High-speed clocking and bonding networks
- One instance of PCI Express hard IP

Figure 6. Heterogeneous 3D SiP Transceiver Tile Architecture

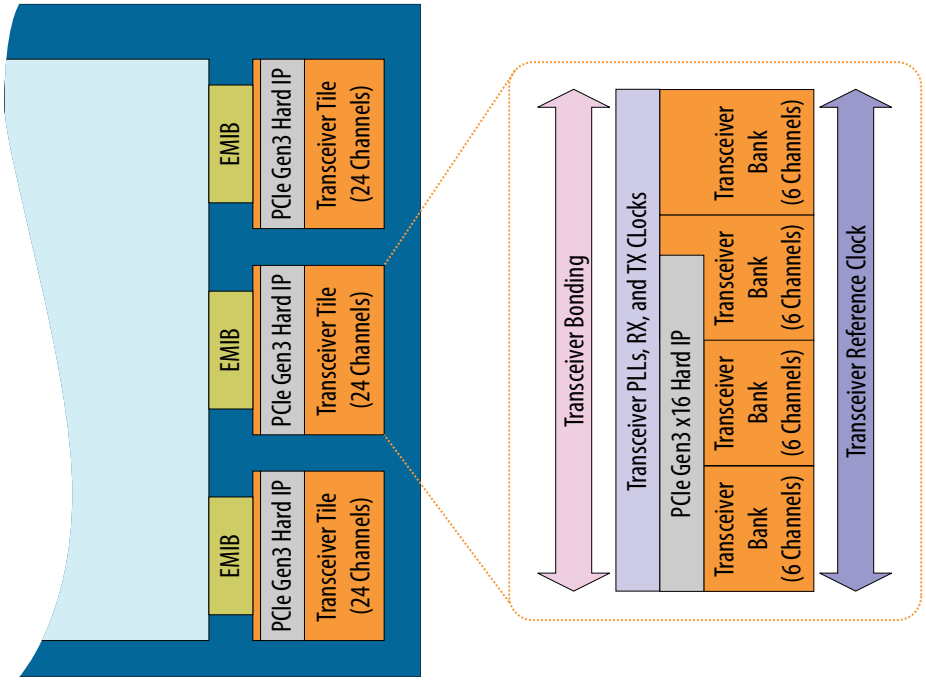

1.8. Intel Stratix 10 Transceivers

Intel Stratix 10 devices offer up to 96 total full-duplex transceiver channels. These channels provide continuous data rates from 1 Gbps to 28.3 Gbps for chip-to-chip, chip-to-module, and backplane applications. In each device,two thirds of the transceivers can be configured up to the maximum data rate of 28.3 Gbps to drive 100G interfaces and C form-factor pluggable CFP2/CFP4 optical modules. For longer-reach backplane driving applications, advanced adaptive equalization circuits are used to equalize over 30 dB of system loss.

All transceiver channels feature a dedicated Physical Medium Attachment (PMA) and a hardened Physical Coding Sublayer (PCS).

- The PMA provides primary interfacing capabilities to physical channels.
- The PCS typically handles encoding/decoding, word alignment, and other pre-processing functions before transferring data to the FPGA core fabric.

Within each transceiver tile, the transceivers are arranged in four banks of six PMA-PCS groups. A wide variety of bonded and non-bonded data rate configurations are possible within each bank, and within each tile, using a highly configurable clock distribution network.

1.8.1. PMA Features

PMA channels are comprised of transmitter (TX), receiver (RX), and high speed clocking resources.

Intel Stratix 10 device features provide exceptional signal integrity at data rates up to 28.3 Gbps. Clocking options include ultra-low jitter LC tank-based (ATX) PLLs with optional fractional synthesis capability, channel PLLs operating as clock multiplier units (CMUs), and fractional synthesis PLLs (fPLLs).

- **ATX PLL**—can be configured in integer mode, or optionally, in a new fractional synthesis mode. Each ATX PLL spans the full frequency range of the supported data rate range providing a stable, flexible clock source with the lowest jitter.
- **CMU PLL**—when not being used as a transceiver, select PMA channels can be configured as channel PLLs operating as CMUs to provide an additional master clock source within the transceiver bank.
- **fPLL**—In addition, dedicated fPLLs are available with precision frequency synthesis capabilities. fPLLs can be used to synthesize multiple clock frequencies from a single reference clock source and replace multiple reference oscillators for multi-protocol and multi-rate applications.

On the receiver side, each PMA has an independent channel PLL that allows analog tracking for clock-data recovery. Each PMA also has advanced equalization circuits that compensate for transmission losses across a wide frequency spectrum.

- **Variable Gain Amplifier (VGA)**—to optimize the receiver's dynamic range
- **Continuous Time Linear Equalizer (CTLE)**—to compensate for channel losses with lowest power dissipation
- **Decision Feedback Equalizer (DFE)**—to provide additional equalization capability on backplanes even in the presence of crosstalk and reflections
- **On-Die Instrumentation (ODI)**—to provide on-chip eye monitoring capabilities (Eye Viewer). This capability helps to optimize link equalization parameters during board bring-up and supports in-system link diagnostics and equalization margin testing

Figure 7. Intel Stratix 10 Receiver Block Features

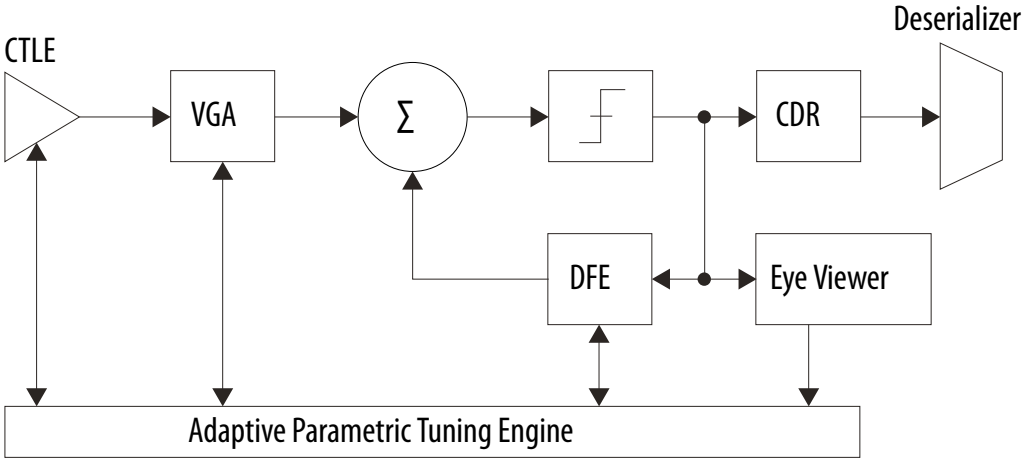

All link equalization parameters feature automatic adaptation using the new Advanced Digital Adaptive Parametric Tuning (ADAPT) circuit. This circuit is used to dynamically set DFE tap weights, adjust CTLE parameters, and optimize VGA gain and threshold voltage. Finally, optimal and consistent signal integrity is ensured by using the new hardened Precision Signal Integrity Calibration Engine (PreSICE) to automatically calibrate all transceiver circuit blocks on power-up. This gives the most link margin and ensures robust, reliable, and error-free operation.

Table 7. Transceiver PMA Features

Feature	Capability
Chip-to-Chip Data Rates	1 Gbps [8] to 28.3 Gbps (Intel Stratix 10 GX/SX devices)
Backplane Support	Drive backplanes at data rates up to 28.3 Gbps, including 10GBASE-KR compliance
Optical Module Support	SFP+/SFP, XFP, CXP, QSFP/QSFP28, QSFPDD, CFP/CFP2/CFP4
Cable Driving Support	SFP+ Direct Attach, PCI Express over cable, eSATA
Transmit Pre-Emphasis	5-tap transmit pre-emphasis and de-emphasis to compensate for system channel loss
Continuous Time Linear Equalizer (CTLE)	Dual mode, high-gain, and high-data rate, linear receive equalization to compensate for system channel loss
Decision Feedback Equalizer (DFE)	15 fixed tap DFE to equalize backplane channel loss in the presence of crosstalk and noisy environments
Advanced Digital Adaptive Parametric Tuning (ADAPT)	Fully digital adaptation engine to automatically adjust all link equalization parameters—including CTLE, DFE, and VGA blocks—that provide optimal link margin without intervention from user logic
Precision Signal Integrity Calibration Engine (PreSICE)	Hardened calibration controller to quickly calibrate all transceiver control parameters on power-up, which provides the optimal signal integrity and jitter performance
ATX Transmit PLLs	Low jitter ATX (inductor-capacitor) transmit PLLs with continuous tuning range to cover a wide range of standard and proprietary protocols, with optional fractional frequency synthesis capability
Fractional PLLs	On-chip fractional frequency synthesizers to replace on-board crystal oscillators and reduce system cost

continued...

(8) Stratix 10 transceivers can support data rates below 1 Gbps with over sampling.

Feature	Capability
Digitally Assisted Analog CDR	Superior jitter tolerance with fast lock time
On-Die Instrumentation—Eye Viewer and Jitter Margin Tool	Simplify board bring-up, debug, and diagnostics with non-intrusive, high-resolution eye monitoring (Eye Viewer). Also inject jitter from transmitter to test link margin in system.
Dynamic Reconfiguration	Allows for independent control of each transceiver channel Avalon memory-mapped interface for the most transceiver flexibility.
Multiple PCS-PMA and PCS-Core to FPGA fabric interface widths	8, 10, 16, 20, 32, 40, or 64 bit interface widths for flexibility of deserialization width, encoding, and reduced latency

1.8.2. PCS Features

Intel Stratix 10 PMA channels interface with core logic through configurable and bypassable PCS interface layers.

The PCS contains multiple gearbox implementations to decouple the PMA and PCS interface widths. This feature provides the flexibility to implement a wide range of applications with 8, 10, 16, 20, 32, 40, or 64 bit interface width between each transceiver and the core logic.

The PCS also contains hard IP to support a variety of standard and proprietary protocols across a wide range of data rates and encoding schemes. The Standard PCS mode provides support for 8B/10B encoded applications up to 12.5 Gbps. The Enhanced PCS mode supports 64B/66B and 64B/67B encoded applications up to 17.4 Gbps. The enhanced PCS mode also includes an integrated 10GBASE-KR/40GBASE-KR4 Forward Error Correction (FEC) circuit. For highly customized implementations, a PCS Direct mode provides an interface up to 64 bits wide to allow for custom encoding and support for data rates up to 28.3 Gbps.

For more information about the PCS-Core interface or the double rate transfer mode, refer to the *Intel Stratix 10 L- and H-Tile Transceiver PHY User Guide*, and the *Intel Stratix 10 E-Tile Transceiver PHY User Guide*.

Table 8. Transceiver PCS Features

PCS Protocol Support	Data Rate (Gbps)	Transmitter Data Path	Receiver Data Path
Standard PCS	1 to 12.5	Phase compensation FIFO, byte serializer, 8B/10B encoder, bit-slipper, channel bonding	Rate match FIFO, word-aligner, 8B/10B decoder, byte deserializer, byte ordering
PCI Express Gen1/Gen2 x1, x2, x4, x8, x16	2.5 and 5.0	Same as Standard PCS plus PIPE 2.0 interface to core	Same as Standard PCS plus PIPE 2.0 interface to core
PCI Express Gen3 x1, x2, x4, x8, x16	8.0	Phase compensation FIFO, byte serializer, encoder, scrambler, bit-slipper, gear box, channel bonding, and PIPE 3.0 interface to core, auto speed negotiation	Rate match FIFO (0-600 ppm mode), word-aligner, decoder, descrambler, phase compensation FIFO, block sync, byte deserializer, byte ordering, PIPE 3.0 interface to core, auto speed negotiation
CPRI	0.6144 to 9.8	Same as Standard PCS plus deterministic latency serialization	Same as Standard PCS plus deterministic latency deserialization

continued...

PCS Protocol Support	Data Rate (Gbps)	Transmitter Data Path	Receiver Data Path
Enhanced PCS	2.5 to 17.4	FIFO, channel bonding, bit-slipper, and gear box	FIFO, block sync, bit-slipper, and gear box
10GBASE-R	10.3125	FIFO, 64B/66B encoder, scrambler, FEC, and gear box	FIFO, 64B/66B decoder, descrambler, block sync, FEC, and gear box
Interlaken	4.9 to 17.4	FIFO, channel bonding, frame generator, CRC-32 generator, scrambler, disparity generator, bit-slipper, and gear box	FIFO, CRC-32 checker, frame sync, descrambler, disparity checker, block sync, and gear box
SFI-S/SFI-5.2	11.3	FIFO, channel bonding, bit-slipper, and gear box	FIFO, bit-slipper, and gear box
IEEE 1588	1.25 to 10.3125	FIFO (fixed latency), 64B/66B encoder, scrambler, and gear box	FIFO (fixed latency), 64B/66B decoder, descrambler, block sync, and gear box
SDI	up to 12.5	FIFO and gear box	FIFO, bit-slipper, and gear box
GigE	1.25	Same as Standard PCS plus GigE state machine	Same as Standard PCS plus GigE state machine
PCS Direct	up to 28.3	Custom	Custom

Related Information

Intel Stratix 10 L- and H-Tile Transceiver PHY User Guide

1.9. PCI Express Gen1/Gen2/Gen3 Hard IP

Intel Stratix 10 devices contain embedded PCI Express hard IP designed for performance, ease-of-use, increased functionality, and designer productivity.

The PCI Express hard IP consists of the PHY, Data Link, and Transaction layers. It also supports PCI Express Gen1/Gen2/Gen3 end point and root port, in x1/x2/x4/x8/x16 lane configurations. The PCI Express hard IP is capable of operating independently from the core logic (autonomous mode). This feature allows the PCI Express link to power up and complete link training in less than 100 ms, while the rest of the device is still in the process of being configured. The hard IP also provides added functionality, which makes it easier to support emerging features such as Single Root I/O Virtualization (SR-IOV) and optional protocol extensions.

The PCI Express hard IP has improved end-to-end data path protection using Error Checking and Correction (ECC). In addition, the hard IP supports configuration of the device via protocol (CvP) across the PCI Express bus at Gen1/Gen2/Gen3 rates.

1.10. Interlaken PCS Hard IP

Intel Stratix 10 devices have integrated Interlaken PCS hard IP supporting rates up to 17.4 Gbps per lane.

The Interlaken PCS hard IP is based on the proven functionality of the PCS developed for Intel's previous generation FPGAs, which has demonstrated interoperability with Interlaken ASSP vendors and third-party IP suppliers. The Interlaken PCS hard IP is present in every transceiver channel in Intel Stratix 10 devices.

1.11. 10G Ethernet Hard IP

Intel Stratix 10 devices include IEEE 802.3 10-Gbps Ethernet (10GbE) compliant 10GBASE-R PCS and PMA hard IP. The scalable 10GbE hard IP supports multiple independent 10GbE ports while using a single PLL for all the 10GBASE-R PCS instantiations, which saves on core logic resources and clock networks.

The integrated serial transceivers simplify multi-port 10GbE systems compared to 10 GbE Attachment Unit Interface (XAUI) interfaces that require an external XAUI-to-10G PHY. Furthermore, the integrated transceivers incorporate signal conditioning circuits, which enable direct connection to standard 10G XFP and SFP+ pluggable optical modules. The transceivers also support backplane Ethernet applications and include a hard 10GBASE-KR/40GBASE-KR4 Forward Error Correction (FEC) circuit that can be used for both 10G and 40G applications. The integrated 10G Ethernet hard IP and 10G transceivers save external PHY cost, board space and system power. The 10G Ethernet PCS hard IP and 10GBASE-KR FEC are present in every transceiver channel.

1.12. External Memory and General Purpose I/O

Intel Stratix 10 devices offer substantial external memory bandwidth, with up to ten 72 bit wide DDR4 memory interfaces running at up to 2666 Mbps.

This bandwidth is provided along with the ease of design, lower power, and resource efficiencies of hardened high-performance memory controllers. The external memory interfaces can be configured up to a maximum width of 144 bits when using either hard or soft memory controllers.

Figure 8. Hard Memory Controller

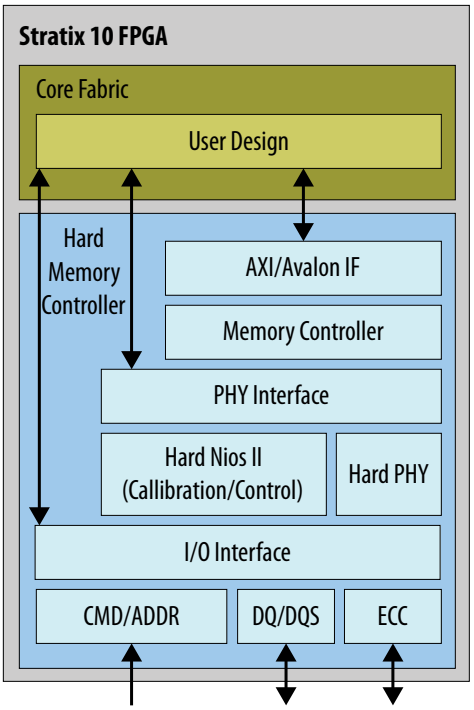

Each I/O bank contains 48 general purpose I/Os and a high-efficiency hard memory controller capable of supporting many different memory types, each with different performance capabilities. The hard memory controller is also capable of being bypassed and replaced by a soft controller implemented in the user logic. The I/Os each have a hardened double data rate (DDR) read/write path (PHY) capable of performing key memory interface functionality such as:

- Read/write leveling
- FIFO buffering to lower latency and improve margin
- Timing calibration
- On-chip termination

The timing calibration is aided by the inclusion of hard microcontrollers based on Intel's Nios® II technology, specifically tailored to control the calibration of multiple memory interfaces. This calibration allows the Intel Stratix 10 device to compensate for any changes in process, voltage, or temperature either within the Intel Stratix 10 device itself, or within the external memory device. The advanced calibration algorithms ensure maximum bandwidth and robust timing margin across all operating conditions.

Table 9. External Memory Interface Performance

The listed speeds are for the 1-rank case.

Interface	Controller Type	Performance
DDR4	Hard	2666 Mbps
DDR3	Hard	2133 Mbps
QDRII+	Soft	1,100 Mtps
QDRII+ Xtreme	Soft	1,266 Mtps
QDRIV	Soft	2,133 Mtps
RLDRAM III	Soft	2400 Mbps
RLDRAM II	Soft	533 Mbps

In addition to parallel memory interfaces, Intel Stratix 10 devices support serial memory technologies such as the Hybrid Memory Cube (HMC). The HMC is supported by the Intel Stratix 10 high-speed serial transceivers, which connect up to four HMC links, with each link running at data rates of 15 Gbps (HMC short reach specification).

Intel Stratix 10 devices also feature general purpose I/Os capable of supporting a wide range of single-ended and differential I/O interfaces. LVDS rates up to 1.6 Gbps are supported, with each pair of pins having both a differential driver and a differential input buffer. This enables configurable direction for each LVDS pair.

1.13. Adaptive Logic Module (ALM)

Intel Stratix 10 devices use a similar adaptive logic module (ALM) as the previous generation Intel Arria 10 and Stratix V FPGAs, allowing for efficient implementation of logic functions and easy conversion of IP between the devices.

The ALM block diagram shown in the following figure has eight inputs with a fracturable look-up table (LUT), two dedicated embedded adders, and four dedicated registers.

Figure 9. Intel Stratix 10 FPGA and SoC ALM Block Diagram

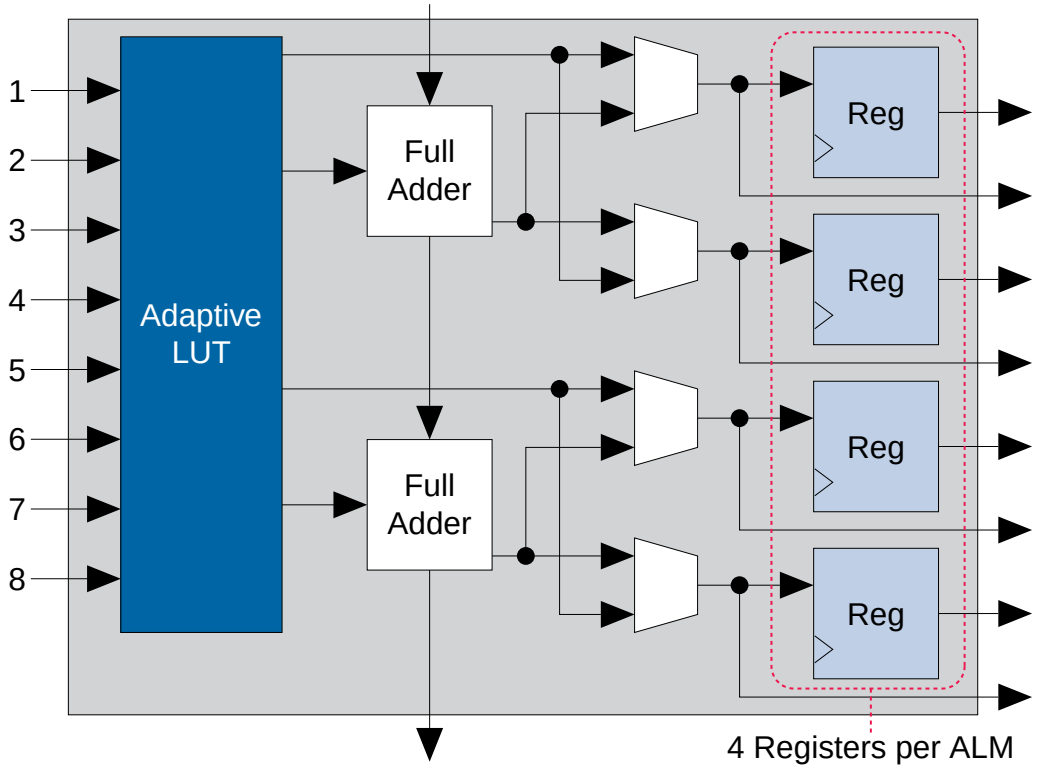

Key features and capabilities of the ALM include:

- High register count with 4 registers per 8-input fracturable LUT, operating in conjunction with the new Intel Hyperflex architecture, enables Intel Stratix 10 devices to maximize core performance at very high core logic utilization
- Implements select 7-input logic functions, all 6-input logic functions, and two independent functions consisting of smaller LUT sizes (such as two independent 4-input LUTs) to optimize core logic utilization

The Intel Quartus Prime software takes advantage of the ALM logic structure to deliver the highest performance, optimal logic utilization, and lowest compile times. The Intel Quartus Prime software simplifies design reuse as it automatically maps legacy designs into the Intel Stratix 10 ALM architecture.

1.14. Core Clocking

Core clocking in Intel Stratix 10 devices makes use of programmable clock tree synthesis.

This technique uses dedicated clock tree routing and switching circuits, and allows the Intel Quartus Prime software to create the exact clock trees required for your design. Clock tree synthesis minimizes clock tree insertion delay, reduces dynamic power dissipation in the clock tree and allows greater clocking flexibility in the core while still maintaining backwards compatibility with legacy global and regional clocking schemes.

The core clock network in Intel Stratix 10 devices supports the new Intel Hyperflex core architecture at clock rates up to 1 GHz. It also supports the hard memory controllers up to 2666 Mbps with a quarter rate transfer to the core. The core clock network is supported by dedicated clock input pins, fractional clock synthesis PLLs, and integer I/O PLLs.

1.15. Fractional Synthesis PLLs and I/O PLLs

Intel Stratix 10 devices have up to 32 fractional synthesis PLLs (fPLL) available for use with transceivers or in the core fabric.

The fPLLs are located in the 3D SiP transceiver L-tiles and H-tiles, eight per tile, adjacent to the transceiver channels. The fPLLs can be used to reduce both the number of oscillators required on the board and the number of clock pins required, by synthesizing multiple clock frequencies from a single reference clock source. In addition to synthesizing reference clock frequencies for the transceiver transmit PLLs, the fPLLs can also be used directly for transmit clocking. Each fPLL can be independently configured for conventional integer mode, or enhanced fractional synthesis mode with third-order delta-sigma modulation.

In addition to the fPLLs, Intel Stratix 10 devices contain up to 24 integer I/O PLLs (IOPLLs) available for general purpose use in the core fabric and for simplifying the design of external memory interfaces and high-speed LVDS interfaces. The IOPLLs are located in each bank of 48 general purpose I/O, 1 per I/O bank, adjacent to the hard memory controllers and LVDS SerDes in each I/O bank. This makes it easier to close timing because the IOPLLs are tightly coupled with the I/Os that need to use them. The IOPLLs can be used for general purpose applications in the core such as clock network delay compensation and zero-delay clock buffering.

1.16. Internal Embedded Memory

Intel Stratix 10 devices contain two types of embedded memory blocks: M20K (20 Kb) and MLAB (640 bit).

The M20K and MLAB blocks are familiar block sizes carried over from previous Intel device families. The MLAB blocks are ideal for wide and shallow memories, while the M20K blocks are intended to support larger memory configurations and include hard ECC. Both M20K and MLAB embedded memory blocks can be configured as a single-port or dual-port RAM, FIFO, ROM, or shift register. These memory blocks are highly flexible and support a number of memory configurations as shown in Table 10 on page 24.

Table 10. Internal Embedded Memory Block Configurations

MLAB (640 bits)	M20K (20 Kb)
64 x 10 (supported through emulation) 32 x 20	2K x 10 (or x8) 1K x 20 (or x16) 512 x 40 (or x32)

1.17. Variable Precision DSP Block

The Intel Stratix 10 DSP blocks are based upon the Variable Precision DSP Architecture used in Intel's previous generation devices. They feature hard fixed point and IEEE 754 compliant floating point capability.

The DSP blocks can be configured to support signal processing with precision ranging from 18x19 up to 54x54. A pipeline register has been added to increase the maximum operating frequency of the DSP block and reduce power consumption.

Figure 10. DSP Block: Standard Precision Fixed Point Mode

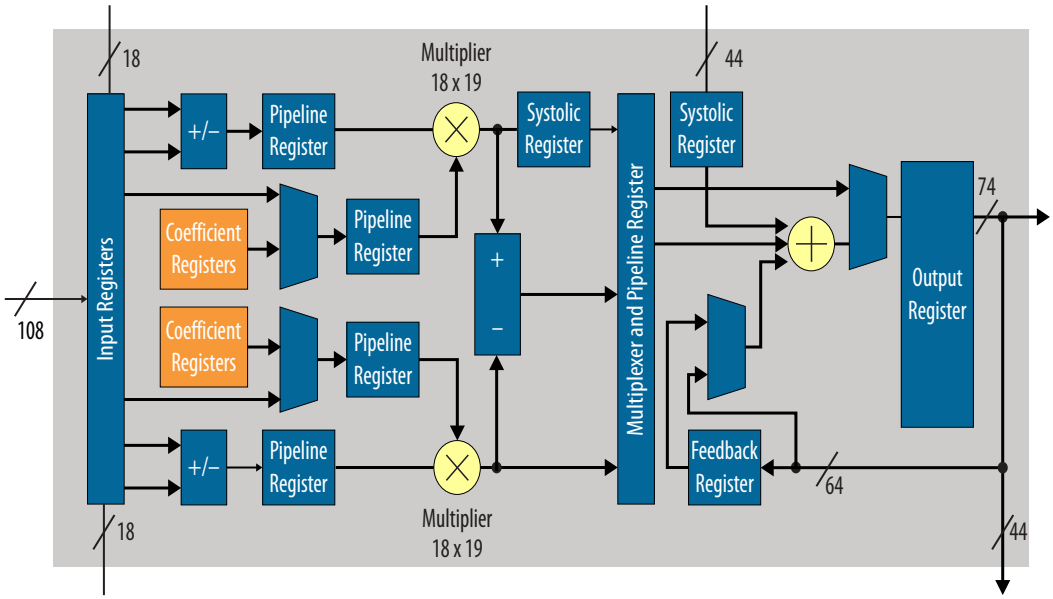

Figure 11. DSP Block: High Precision Fixed Point Mode

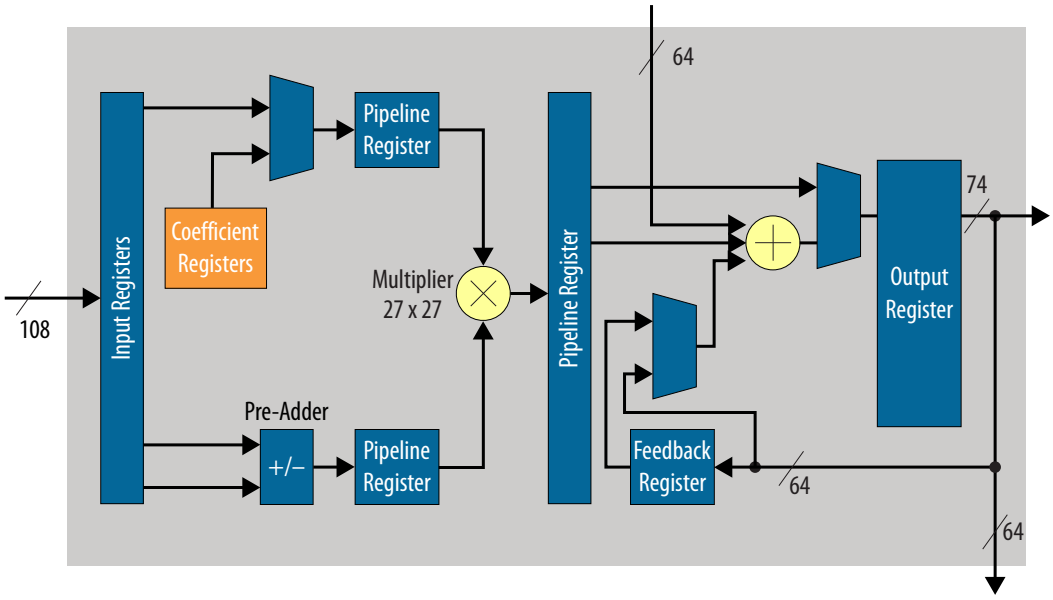

Figure 12. DSP Block: Single Precision Floating Point Mode

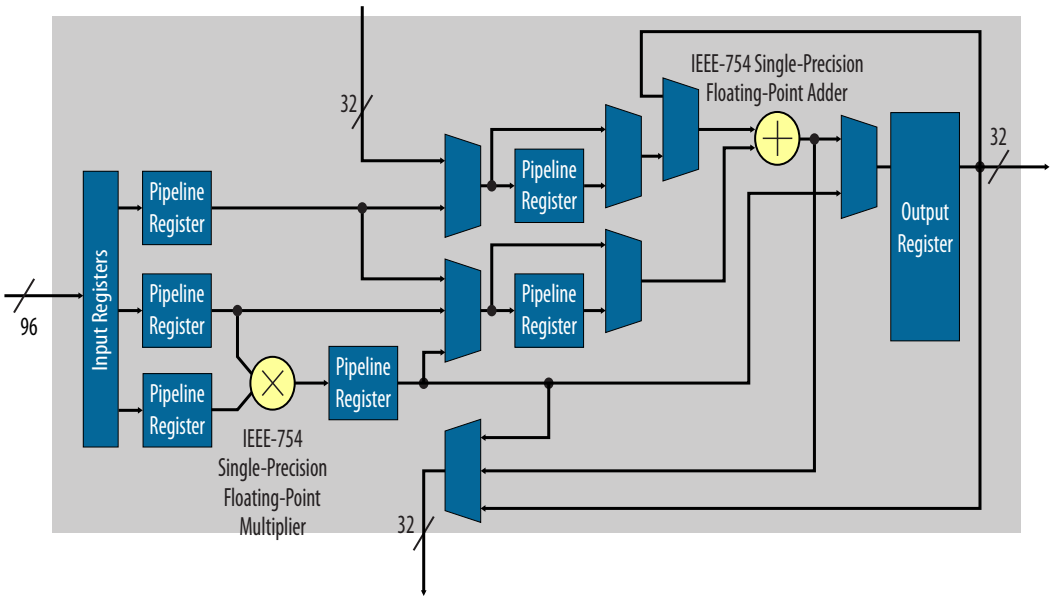

Each DSP block can be independently configured at compile time as either dual 18x19 or a single 27x27 multiply accumulate. With a dedicated 64 bit cascade bus, multiple variable precision DSP blocks can be cascaded to implement even higher precision DSP functions efficiently.

In floating point mode, each DSP block provides one single precision floating point multiplier and adder. Floating point additions, multiplications, mult-adds and mult-accumulates are supported.

The following table shows how different precisions are accommodated within a DSP block, or by utilizing multiple blocks.

Table 11. Variable Precision DSP Block Configurations

Multiplier Size	DSP Block Resources	Expected Usage
18x19 bits	1/2 of Variable Precision DSP Block	Medium precision fixed point
27x27 bits	1 Variable Precision DSP Block	High precision fixed point
19x36 bits	1 Variable Precision DSP Block with external adder	Fixed point FFTs
36x36 bits	2 Variable Precision DSP Blocks with external adder	Very high precision fixed point
54x54 bits	4 Variable Precision DSP Blocks with external adder	Double Precision floating point
Single Precision floating point	1 Single Precision floating point adder, 1 Single Precision floating point multiplier	Floating point

Complex multiplication is very common in DSP algorithms. One of the most popular applications of complex multipliers is the FFT algorithm. This algorithm has the characteristic of increasing precision requirements on only one side of the multiplier. The Variable Precision DSP block supports the FFT algorithm with proportional increase in DSP resources as the precision grows.

Table 12. Complex Multiplication With Variable Precision DSP Block

Complex Multiplier Size	DSP Block Resources	FFT Usage
18x19 bits	2 Variable Precision DSP Blocks	Resource optimized FFT
27x27 bits	4 Variable Precision DSP Blocks	Highest precision FFT

For FFT applications with high dynamic range requirements, the Intel FFT IP Core offers an option of single precision floating point implementation with resource usage and performance similar to high precision fixed point implementations.

Other features of the DSP block include:

- Hard 18 bit and 25 bit pre-adders
- Hard floating point multipliers and adders
- 64 bit dual accumulator (for separate I, Q product accumulations)
- Cascaded output adder chains for 18 and 27 bit FIR filters
- Embedded coefficient registers for 18 and 27 bit coefficients
- Fully independent multiplier outputs
- Inferability using HDL templates supplied by the Intel Quartus Prime software for most modes

The Variable Precision DSP block is ideal to support the growing trend towards higher bit precision in high performance DSP applications. At the same time, it can efficiently support the many existing 18 bit DSP applications, such as high definition video processing and remote radio heads. With the Variable Precision DSP block architecture and hard floating point multipliers and adders, Intel Stratix 10 devices can efficiently support many different precision levels up to and including floating point implementations. This flexibility can result in increased system performance, reduced power consumption, and reduce architecture constraints on system algorithm designers.

1.18. Hard Processor System (HPS)

The Intel Stratix 10 SoC Hard Processor System (HPS) is Intel's third generation HPS. Leveraging the performance of Intel 14 nm tri-gate technology, Intel Stratix 10 SoC devices more than double the performance of previous generation SoCs with an integrated quad-core 64-bit Arm Cortex-A53. The HPS also enables system-wide hardware virtualization capabilities by adding a system memory management unit. These architecture improvements ensure that Intel Stratix 10 SoCs meet the requirements of current and future embedded markets, including wireless and wireline communications, data center acceleration, and numerous military applications.

Figure 13. HPS Block Diagram

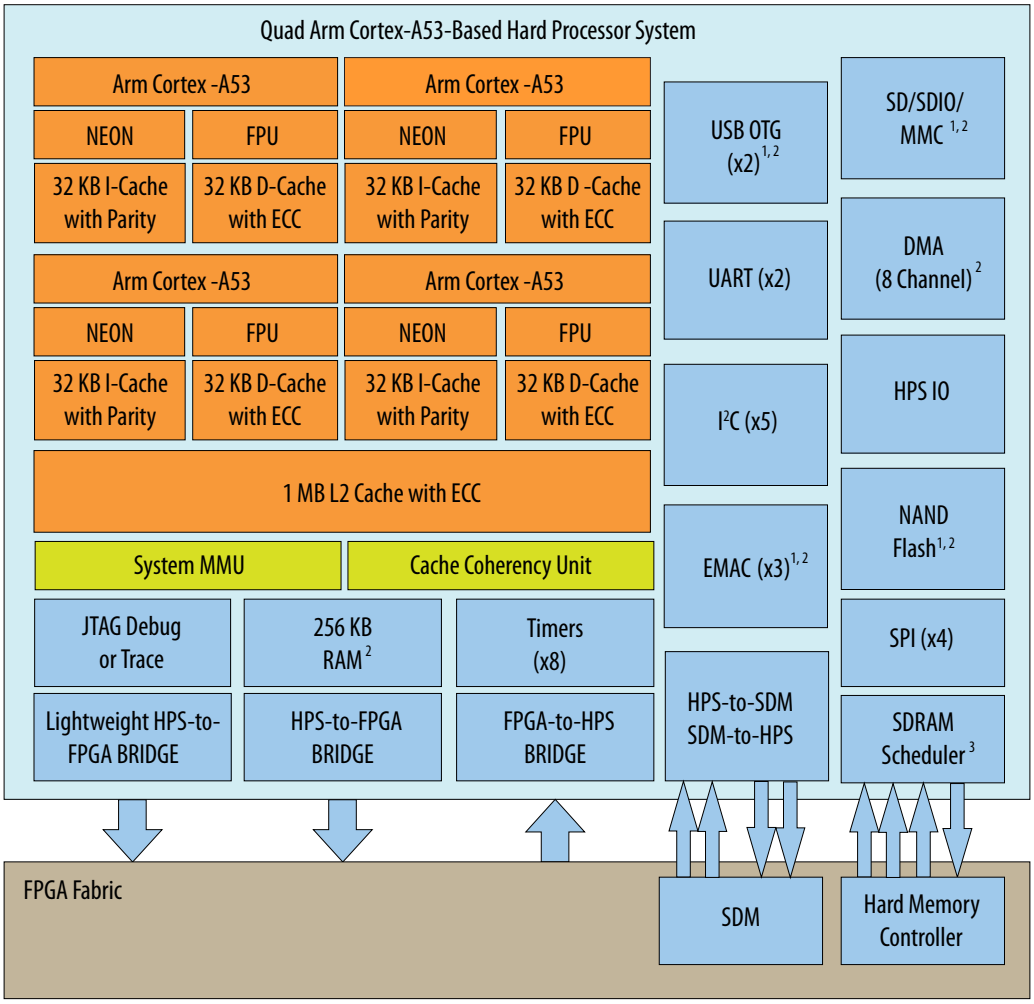

Notes:
1. Integrated direct memory access (DMA)
2. Integrated error correction code (ECC)
3. Multiport front-end interface to hard memory controller

1.18.1. Key Features of the Intel Stratix 10 HPS

Table 13. Key Features of the Intel Stratix 10 GX/SX HPS

Feature	Description
Quad-core Arm Cortex-A53 MPCore processor unit	• 2.3 MIPS/MHz instruction efficiency • CPU frequency up to 1.5 GHz • At 1.5 GHz total performance of 13,800 MIPS • Armv8-A architecture • Runs 64 bit and 32 bit Arm instructions • 16 bit and 32 bit Thumb instructions for 30% reduction in memory footprint • Jazelle* RCT execution architecture with 8 bit Java byte codes

continued...

Feature	Description
	• Superscalar, variable length, out-of-order pipeline with dynamic branch prediction • Improved Arm Neon* media processing engine • Single- and double-precision floating-point unit • Arm CoreSight* debug and trace technology
System Memory Management Unit	• Enables a unified memory model and extends hardware virtualization into peripherals implemented in the FPGA fabric
Cache Coherency unit	• Changes in shared data stored in cache are propagated throughout the system providing bi-directional coherency for co-processing elements.
Cache	• L1 Cache — 32 KB of instruction cache w/ parity check — 32 KB of L1 data cache w /ECC — Parity checking • L2 Cache — 1MB shared — 8-way set associative — SEU Protection with parity on TAG ram and ECC on data RAM — Cache lockdown support
On-Chip Memory	• 256 KB of scratch on-chip RAM
External SDRAM and Flash Memory Interfaces for HPS	• Hard memory controller with support for DDR4, DDR3 — 40 bit (32 bit + 8 bit ECC) with select packages supporting 72 bit (64 bit + 8 bit ECC) — Support for up to 2666 Mbps DDR4 and 2166 Mbps DDR3 frequencies — Error correction code (ECC) support including calculation, error correction, write-back correction, and error counters — Software Configurable Priority Scheduling on individual SDRAM bursts — Fully programmable timing parameter support for all JEDEC-specified timing parameters — Multiport front-end (MPFE) scheduler interface to the hard memory controller, which supports the AXI® Quality of Service (QoS) for interface to the FPGA fabric • NAND flash controller — ONFI 1.0 — Integrated descriptor based with DMA — Programmable hardware ECC support — Support for 8 and 16 bit Flash devices • Secure Digital SD/SDIO/MMC controller — eMMC 4.5 — Integrated descriptor based DMA — CE-ATA digital commands supported — 50 MHz operating frequency • Direct memory access (DMA) controller — 8-channel — Supports up to 32 peripheral handshake interface

continued...

Feature	Description
Communication Interface Controllers	• Three 10/100/1000 Ethernet media access controls (MAC) with integrated DMA — Supports RGMII and RMII external PHY Interfaces — Option to support other PHY interfaces through FPGA logic • GMII • MII • RMII (requires MII to RMII adapter) • RGMII (requires GMII to RGMII adapter) • SGMII (requires GMII to SGMII adapter) — Supports IEEE 1588-2002 and IEEE 1588-2008 standards for precision networked clock synchronization — Supports IEEE 802.1Q VLAN tag detection for reception frames — Supports Ethernet AVB standard • Two USB On-the-Go (OTG) controllers with DMA — Dual-Role Device (device and host functions) • High-speed (480 Mbps) • Full-speed (12 Mbps) • Low-speed (1.5 Mbps) • Supports USB 1.1 (full-speed and low-speed) — Integrated descriptor-based scatter-gather DMA — Support for external ULPI PHY — Up to 16 bidirectional endpoints, including control endpoint — Up to 16 host channels — Supports generic root hub — Configurable to OTG 1.3 and OTG 2.0 modes • Five I^2C controllers (three can be used by EMAC for MIO to external PHY) — Support both 100 Kbps and 400 Kbps modes — Support both 7 bit and 10 bit addressing modes — Support Master and Slave operating mode • Two UART 16550 compatible — Programmable baud rate up to 115.2 Kbaud • Four serial peripheral interfaces (SPI) (2 Masters, 2 Slaves) — Full and Half duplex
Timers and I/O	• Timers — 4 general-purpose timers — 4 watchdog timers • 48 HPS direct I/O allow HPS peripherals to connect directly to I/O • Up to three IO48 banks may be assigned to HPS for HPS DDR access
Interconnect to Logic Core	• FPGA-to-HPS Bridge — Allows IP bus masters in the FPGA fabric to access to HPS bus slaves — Configurable 32, 64, or 128 bit AMBA AXI interface • HPS-to-FPGA Bridge — Allows HPS bus masters to access bus slaves in FPGA fabric — Configurable 32, 64, or 128 bit AMBA AXI interface allows high-bandwidth HPS master transactions to FPGA fabric • HPS-to-SDM and SDM-to-HPS Bridges — Allows the HPS to reach the SDM block and the SDM to bootstrap the HPS • Light Weight HPS-to-FPGA Bridge — Light weight 32 bit AXI interface suitable for low-latency register accesses from HPS to soft peripherals in FPGA fabric • FPGA-to-HPS SDRAM Bridge — Up to three AMBA AXI interfaces supporting 32, 64, or 128 bit data paths

1.19. Power Management

Intel Stratix 10 devices leverage the advanced Intel 14 nm tri-gate process technology, the all new Intel Hyperflex core architecture to enable Hyper-Folding, power gating, and several optional power reduction techniques to reduce total power consumption by as much as 70% compared to previous generation high-performance Stratix V devices.

Intel Stratix 10 standard power devices (-V) are SmartVID devices. The core voltage supplies (VCC and VCCP) for each SmartVID device must be driven by a PMBus voltage regulator dedicated to that Intel Stratix 10 device. Use of a PMBus voltage regulator for each SmartVID (-V) device is mandatory; it is not an option. A code is programmed into each SmartVID device during manufacturing that allows the PMBus voltage regulator to operate at the optimum core voltage to meet the device performance specifications.

With the new Intel Hyperflex core architecture, designs can run 2X faster than previous generation FPGAs. With 2X performance and same required throughput, architects can cut the data path width in half to save power. This optimization is called Hyper-Folding. Additionally, power gating reduces static power of unused resources in the FPGA by powering them down. The Intel Quartus Prime software automatically powers down specific unused resource blocks such as DSP and M20K blocks, at configuration time.

The optional power reduction techniques in Intel Stratix 10 devices include:

- **Available Low Static Power Devices**—Intel Stratix 10 devices are available with a fixed core voltage that provides lower static power than the SmartVID standard power devices, while maintaining device performance

Furthermore, Intel Stratix 10 devices feature Intel's low power transceivers and include a number of hard IP blocks that not only reduce logic resources but also deliver substantial power savings compared to soft implementations. In general, hard IP blocks consume up to 50% less power than the equivalent soft logic implementations.

1.20. Device Configuration and Secure Device Manager (SDM)

All Intel Stratix 10 devices contain a Secure Device Manager (SDM), which is a dedicated triple-redundant processor that serves as the point of entry into the device for all JTAG and configuration commands. The SDM also bootstraps the HPS in SoC devices ensuring that the HPS can boot using the same security features that the FPGA devices have.

Figure 14. SDM Block Diagram

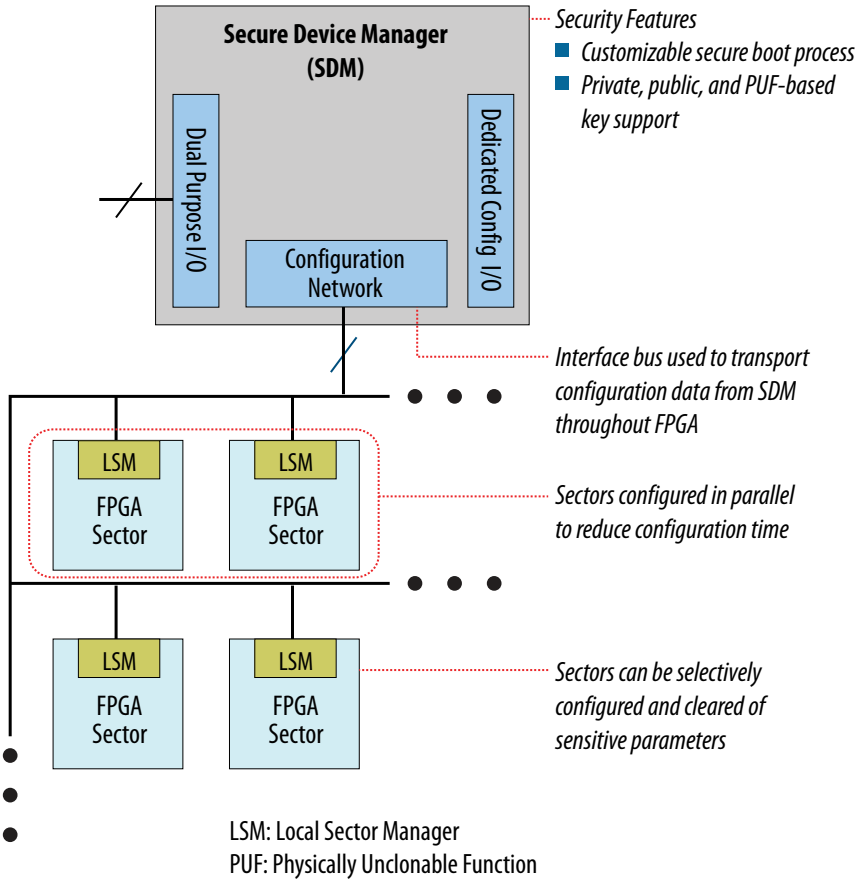

During configuration, Intel Stratix 10 devices are divided into logical sectors, each of which is managed by a local sector manager (LSM). The SDM passes configuration data to each of the LSMs across the on-chip configuration network. This allows the sectors to be configured independently, one at a time, or in parallel. This approach achieves simplified sector configuration and reconfiguration, as well as reduced overall configuration time due to the inherent parallelism. The same sector-based approach is used to respond to single-event upsets and security attacks.

While the sectors provide a logical separation for device configuration and reconfiguration, they overlay the normal rows and columns of FPGA logic and routing. This means there is no impact to the Intel Quartus Prime software place and route, and no impact to the timing of logic signals that cross the sector boundaries.

The SDM enables robust, secure, fully-authenticated device configuration. It also allows for customization of the configuration scheme, which can enhance device security. For configuration and reconfiguration, this approach offers a variety of advantages:

- Dedicated secure configuration manager
- Reduced device configuration time, because sectors are configured in parallel
- Updateable configuration process
- Reconfiguration of one or more sectors independent of all other sectors
- Zeroization of individual sectors or the complete device

The SDM also provides additional capabilities such as register state readback and writeback to support ASIC prototyping and other applications.

1.21. Device Security

Building on top of the robust security features present in the previous generation devices, Intel Stratix 10 FPGAs and SoCs include a number of new and innovative security enhancements. These features are also managed by the SDM, tightly coupling device configuration and reconfiguration with encryption, authentication, key storage and anti-tamper services.

Security services provided by the SDM include:

- Bitstream encryption
- Multi-factor authentication
- Hard encryption and authentication acceleration; AES-256, SHA-256/384, ECDSA-256/384
- Volatile and non-volatile encryption key storage and management
- Boot code authentication for the HPS
- Physically Unclonable Function (PUF) service
- Updateable configuration process
- Secure device maintenance and upgrade functions
- Side channel attack protection
- Scripted response to sensor inputs and security attacks, including selective sector zeroization
- Readback, JTAG and test mode disable
- Enhanced response to single-event upsets (SEU)

The SDM and associated security services provide a robust, multi-layered security solution for your Intel Stratix 10 design.

1.22. Configuration via Protocol Using PCI Express

Configuration via protocol using PCI Express allows the FPGA to be configured across the PCI Express bus, simplifying the board layout and increasing system integration. Making use of the embedded PCI Express hard IP operating in autonomous mode before the FPGA is configured, this technique allows the PCI Express bus to be powered up and active within the 100 ms time allowed by the PCI Express

specification. Intel Stratix 10 devices also support partial reconfiguration across the PCI Express bus which reduces system down time by keeping the PCI Express link active while the device is being reconfigured.

1.23. Partial and Dynamic Reconfiguration

Partial reconfiguration allows you to reconfigure part of the FPGA while other sections continue running. This capability is required in systems where uptime is critical, because it allows you to make updates or adjust functionality without disrupting services.

In addition to lowering power and cost, partial reconfiguration also increases the effective logic density by removing the necessity to place in the FPGA those functions that do not operate simultaneously. Instead, these functions can be stored in external memory and loaded as needed. This reduces the size of the required FPGA by allowing multiple applications on a single FPGA, saving board space and reducing power. The partial reconfiguration process is built on top of the proven incremental compile design flow in the Intel Quartus Prime design software

Dynamic reconfiguration in Intel Stratix 10 devices allows transceiver data rates, protocols and analog settings to be changed dynamically on a channel-by-channel basis while maintaining data transfer on adjacent transceiver channels. Dynamic reconfiguration is ideal for applications that require on-the-fly multiprotocol or multi-rate support. Both the PMA and PCS blocks within the transceiver can be reconfigured using this technique. Dynamic reconfiguration of the transceivers can be used in conjunction with partial reconfiguration of the FPGA to enable partial reconfiguration of both core and transceivers simultaneously.

1.24. Fast Forward Compile

The innovative Fast Forward Compile feature in the Intel Quartus Prime software identifies performance bottlenecks in your design and provides detailed, step-by-step performance improvement recommendations that you can then implement. The Compiler reports estimates of the maximum operating frequency that can be achieved by applying the recommendations. As part of the new Hyper-Aware design flow, Fast Forward Compile maximizes the performance of your Intel Stratix 10 design and achieves rapid timing closure.

Previously, this type of optimization required multiple time-consuming design iterations, including full design re-compilation to determine the effectiveness of the changes. Fast Forward Compile enables you to make better decisions about where to focus your optimization efforts, and how to increase your design performance and throughput. This technique removes much of the guesswork of performance exploration, resulting in fewer design iterations and as much as 2X core performance gains for Intel Stratix 10 designs.

1.25. Single Event Upset (SEU) Error Detection and Correction

Intel Stratix 10 FPGAs and SoCs offer robust SEU error detection and correction circuitry. The detection and correction circuitry includes protection for Configuration RAM (CRAM) programming bits and user memories. The CRAM is protected by a continuously running parity checker circuit with integrated ECC that automatically corrects one or two bit errors and detects higher order multibit errors.

The physical layout of the CRAM array is optimized to make the majority of multi-bit upsets appear as independent single-bit or double-bit errors which are automatically corrected by the integrated CRAM ECC circuitry. In addition to the CRAM protection, the user memories also include integrated ECC circuitry and are layout optimized for error detection and correction.

The SEU error detection and correction hardware is supported by both soft IP and the Intel Quartus Prime software to provide a complete SEU mitigation solution. The components of the complete solution include:

- Hard error detection and correction for CRAM and user M20K memory blocks
- Optimized physical layout of memory cells to minimize probability of SEU
- Sensitivity processing soft IP that reports if CRAM upset affects a used or unused bit
- Fault injection soft IP with the Intel Quartus Prime software support that changes state of CRAM bits for testing purposes
- Hierarchy tagging in the Intel Quartus Prime software
- Triple Mode Redundancy (TMR) used for the Secure Device Manager and critical on-chip state machines

In addition to the SEU mitigation features listed above, the Intel 14 nm tri-gate process technology used for Intel Stratix 10 devices is based on FinFET transistors which have reduced SEU susceptibility versus conventional planar transistors.

1.26. Document Revision History for the Intel Stratix 10 GX/SX Device Overview

Document Version	Changes
2019.08.19	Made the following changes: • Added composition details for the leaded and lead-free contact device options. • Updated the I/O PLL counts.
2019.02.15	Made the following changes: • Changed the number of included logic elements globally. • Removed logic density 450, logic density 550, and package code 48 from the "Sample Ordering Code and Available Options for Intel Stratix 10 Devices" figure. • Updated description of the higher density in the "Innovations in Intel Stratix 10 FPGAs and SoCs" section. • Updated description of the general purpose I/Os in the "Intel Stratix 10 FPGA and SoC Common Device Features" table. • Removed support for LPDDR3 globally. • Updated the "Intel Stratix 10 FPGA and SoC Architecture Block Diagram" figure. • Updated the "Intel Stratix 10 GX/SX FPGA and SoC Family Plan-FPGA Core (part 1)" table. • Updated the "Intel Stratix 10 GX/SX FPGA and SoC Family Plan-Interconnects, PLLs and Hard IP (part 2)" table. • Updated and merged the "Intel Stratix 10 GX/SX FPGA and SoC Family Package Plan" tables.
2018.08.08	Made the following changes:

continued...

Document Version	Changes
	• Changed the specs for QDRII+ and QDRII+ Xtreme and added specs for QDRIV in the "External Memory Interface Performance" table. • Updated description of the power options in the "Sample Ordering Code and Available Options for Intel Stratix 10 Devices" figure. • Changed the description of the technology and power management features in the "Intel Stratix 10 FPGA and SoC Common Device Features" table. • Changed the description of SmartVID in the "Power Management" section. • Changed the direction arrow from the coefficient registers block in the "DSP Block: High Precision Fixed Point Mode" figure.
2017.10.30	Made the following changes: • Removed the embedded eSRAM feature globally. • Removed the Low Power (VID) and Military operating temperature options, and package code 53 from the "Sample Ordering Code and Available Options for Stratix 10 Devices" figure. • Changed the Maximum transceiver data rate (chip-to-chip) specification for L-Tile devices in the "Key Features of Intel Stratix 10 Devices Compared to Stratix V Devices" table.
2016.10.31	Made the following changes: • Changed the number of available transceivers to 96, globally. • Changed the single-precision floating point performance to 10 TFLOP, globally. • Changed the maximum datarate to 28.3 Gbps, globally. • Changed some of the features listed in the "Stratix 10 GX/SX Device Overview" section. • Changed descriptions for the GX and SX devices in the "Stratix 10 Family Variants" section. • Changed the "Sample Ordering Code and Available Options for Stratix 10 Devices" figure. • Changed the features listed in the "Key Features of Stratix 10 Devices Compared to Stratix V Devices" table. • Changed the descriptions of the following areas of the "Stratix 10 FPGA and SoC Common Device Features" table: — Transceiver hard IP — Internal memory blocks — Core clock networks — Packaging • Reorganized and updated all tables in the "Stratix 10 FPGA and SoC Family Plan" section. • Removed the "Migration Between Arria 10 FPGAs and Stratix 10 FPGAs" section. • Removed footnotes from the "Transceiver PCS Features" table. • Changed the HMC description in the "External Memory and General Purpose I/O" section. • Changed the number of fPLLs in the "Fractional Synthesis PLLs and I/O PLLs" section. • Clarified HMC data width support in the "Key Features of the Stratix 10 HPS" table. • Changed the description in the "Internal Embedded Memory" section. • Changed the datarate for the Standard PCS and SDI PCS features in the "Transceiver PCS Features" table. • Added a note to the "PCI Express Gen1/Gen2/Gen3 Hard IP" section. • Updated the "Key Features of the Stratix 10 HPS" table. • Changed the description for the Cache coherency unit in the "Key Features of the Stratix 10 HPS" table. • Changed the description for the external SDRAM and Flash memory interfaces for HPS in the "Key Features of the Stratix 10 HPS" table.
2015.12.04	Initial release.

Общество с ограниченной ответственностью «МосЧип» ИНН 7719860671 / КПП 771901001
Адрес: 105318, г.Москва, ул.Щербаковская д.3, офис 1107

Данный компонент на территории Российской Федерации

Вы можете приобрести в компании MosChip.

Для оперативного оформления запроса Вам необходимо перейти по данной ссылке:

http://moschip.ru/get-element

Вы можете разместить у нас заказ для любого Вашего проекта, будь то серийное производство или разработка единичного прибора.

В нашем ассортименте представлены ведущие мировые производители активных и пассивных электронных компонентов.

Нашей специализацией является поставка электронной компонентной базы двойного назначения, продукции таких производителей как XILINX, Intel (ex.ALTERA), Vicor, Microchip, Texas Instruments, Analog Devices, Mini-Circuits, Amphenol, Glenair.

Сотрудничество с глобальными дистрибьюторами электронных компонентов, предоставляет возможность заказывать и получать с международных складов практически любой перечень компонентов в оптимальные для Вас сроки.

На всех этапах разработки и производства наши партнеры могут получить квалифицированную поддержку опытных инженеров.

Система менеджмента качества компании отвечает требованиям в соответствии с ГОСТ Р ИСО 9001, ГОСТ РВ 0015-002 и ЭС РД 009

Офис по работе с юридическими лицами:

105318, г.Москва, ул.Щербаковская д.3, офис 1107, 1118, ДЦ «Щербаковский»

Телефон: +7 495 668-12-70 (многоканальный)

Факс: +7 495 668-12-70 (доб.304)

E-mail: info@moschip.ru

Skype отдела продаж:
moschip.ru
moschip.ru_4
moschip.ru_6
moschip.ru_9