CBT3257A

Quad 1-of-2 multiplexer/demultiplexer

Rev. 6 — 20 June 2019 Product data sheet

1. General description

The CBT3257A is a quad 1-of-2 high-speed TTL-compatible multiplexer/demultiplexer. The low ON resistance of the switch allows inputs to be connected to outputs without adding propagation delay or generating additional ground bounce noise.

Output enable ($\overline{OE}$) and select-control (S) inputs select the appropriate nB1 and nB2 outputs for the nA input data.

The CBT3257A is characterized for operation from -40 °C to +85 °C.

2. Features and benefits

- 5 Ω switch connection between two ports
- TTL-compatible input levels
- Minimal propagation delay through the switch
- Latch-up protection exceeds 100 mA per JEDEC standard JESD78 class II level A
- ESD protection:
  - HBM JESD22-A114F exceeds 2000 V
  - MM JESD22-A115-A exceeds 200 V
  - CDM JESD22-C101E exceeds 1000 V
- Multiple package options
- Specified from -40 °C to +85 °C

3. Ordering information

Table 1. Ordering information

Type number	Temperature range	Package		
		Name	Description	Version
CBT3257AD	-40 °C to +85 °C	SO16	plastic small outline package; 16 leads; body width 3.9 mm	SOT109-1
CBT3257ADB	-40 °C to +85 °C	SSOP16	plastic shrink small outline package; 16 leads; body width 5.3 mm	SOT338-1
CBT3257ADS	-40 °C to +85 °C	SSOP16[1]	plastic shrink small outline package; 16 leads; body width 3.9 mm; lead pitch 0.635 mm	SOT519-1
CBT3257APW	-40 °C to +85 °C	TSSOP16	plastic thin shrink small outline package; 16 leads; body width 4.4 mm	SOT403-1
CBT3257ABQ	-40 °C to +85 °C	DHVQFN16	plastic dual in-line compatible thermal enhanced very thin quad flat package; no leads; 16 terminals; body 2.5 x 3.5 x 0.85 mm	SOT763-1

[1] Also known as QSOP16.

nexperia

4. Functional diagram

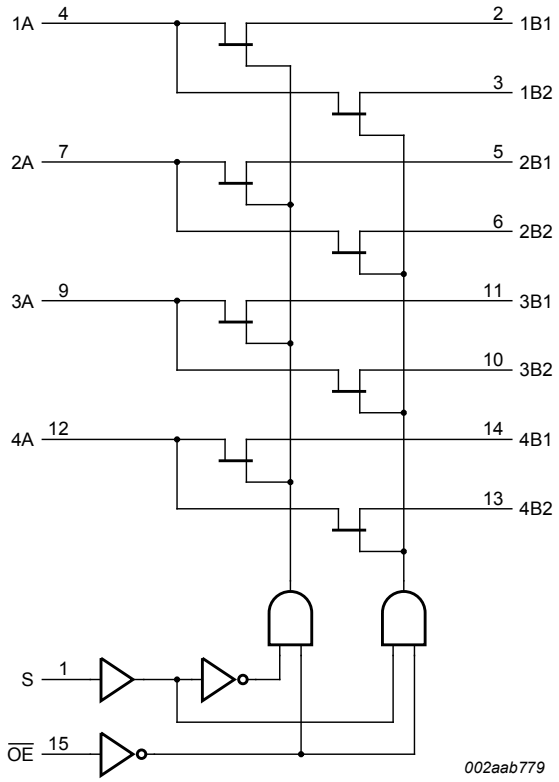

Fig. 1. Logic diagram

5. Pinning information

5.1. Pinning

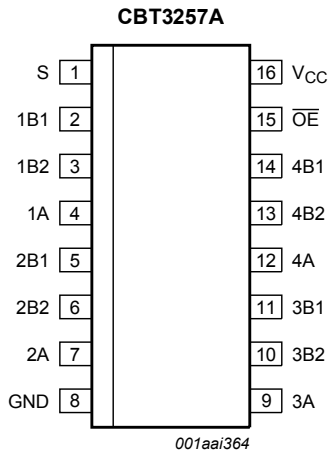

Fig. 2. Pin configuration SOT109-1 (SO16) and SOT519-1 (SSOP16)

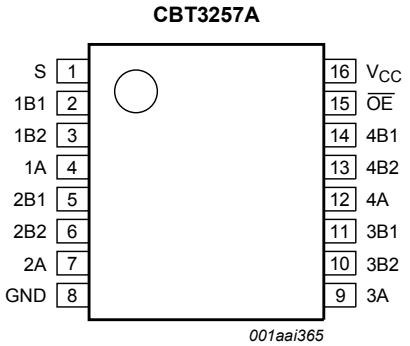

Fig. 3. Pin configuration SOT338-1 (SSOP16) and SOT403-1 (TSSOP16)

All information provided in this document is subject to legal disclaimers.

© Nexperia B.V. 2019. All rights reserved

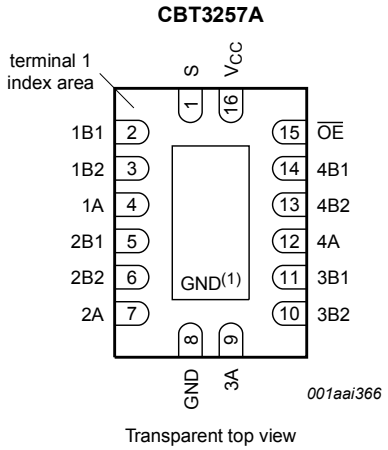

(1) This is not a ground pin. There is no electrical or mechanical requirement to solder the pad. In case soldered, the solder land should remain floating or connected to GND.

Fig. 4. Pin configuration SOT763-1 (DHVQFN16)

5.2. Pin description

Table 2. Pin description

Symbol	Pin	Description
S	1	select control input
1B1, 2B1, 3B1, 4B1,	2, 5, 11, 14	B1 outputs/inputs
1B2, 2B2, 3B2, 4B2	3, 6, 10, 13	B2 outputs/inputs
1A, 2A, 3A, 4A	4, 7, 9, 12	A inputs/outputs
GND	8	ground (0 V)
$\overline{OE}$	15	output enable (active LOW)
V_{CC}	16	positive supply voltage

6. Functional description

Table 3. Function selection

H = HIGH voltage level; L = LOW voltage level; X = Don't care.

Inputs		Switch
$\overline{OE}$	S	
L	L	nA to nB1
L	H	nA to nB2
H	X	switch off

7. Limiting values

Table 4. Limiting values

In accordance with the Absolute Maximum Rating System (IEC 60134).

Symbol	Parameter	Conditions		Min	Max	Unit
V_{CC}	supply voltage			-0.5	+7.0	V
V_I	input voltage		[1]	-0.5	+7.0	V
I_{SW}	switch current	continuous current through each switch		-	128	mA

All information provided in this document is subject to legal disclaimers.

© Nexperia B.V. 2019. All rights reserved

Symbol	Parameter	Conditions	Min	Max	Unit
I_{IK}	input clamping current	V_I < 0 V	-50	-	mA
T_{stg}	storage temperature		-65	+150	°C
P_{tot}	total power dissipation	T_{amb} = -40 °C to +85 °C			
		SO16, (T)SSOP16 and DHVQFN16 packages	-	500	mW

[1] The input and output negative voltage ratings may be exceeded if the input and output clamp current ratings are observed.

8. Recommended operating conditions

Table 5. Operating conditions

All unused control inputs of the device must be held at V_{CC} or GND to ensure proper device operation.

Symbol	Parameter	Conditions	Min	Max	Unit
V_{CC}	supply voltage		4.5	5.5	V
V_{IH}	HIGH-level input voltage		2.0	-	V
V_{IL}	LOW-level input voltage		-	0.8	V
T_{amb}	ambient temperature	operating in free-air	-40	+85	°C

9. Static characteristics

Table 6. Static characteristics

T_{amb} = -40 °C to +85 °C.

Symbol	Parameter	Conditions	Min	Typ[1]	Max	Unit
V_{IK}	input clamping voltage	V_{CC} = 4.5 V; I_I = -18 mA	-	-	-1.2	V
V_{pass}	pass voltage	V_I = V_{CC} = 5.0 V; I_O = -100 μA	3.6	3.9	4.2	V
I_I	input leakage current	V_{CC} = 5.5 V; V_I = GND or 5.5 V	-	-	±1	μA
I_{CC}	supply current	V_{CC} = 5.5 V; I_O = 0 mA; V_I = V_{CC} or GND	-	-	3	μA
ΔI_{CC}	additional supply current	per input; V_{CC} = 5.5 V; one input at 3.4 V, other inputs at V_{CC} or GND [2]	-	-	2.5	mA
C_I	input capacitance	control pins; V_I = 3 V or 0 V	-	3.3	-	pF
$C_{io(off)}$	off-state input/output capacitance	A port; V_O = 3 V or 0 V; $\overline{OE}$ = V_{CC}	-	9.9	-	pF
		B port; V_O = 3 V or 0 V; $\overline{OE}$ = V_{CC}	-	6.4	-	pF
R_{ON}	ON resistance	V_{CC} = 4.5 V [3]				
		V_I = 0 V; I_I = 64 mA	-	5	7	Ω
		V_I = 0 V; I_I = 30 mA	-	5	7	Ω
		V_I = 2.4 V; I_I = 15 mA	-	10	15	Ω

[1] All typical values are measured at V_{CC} = 5 V; T_{amb} = 25 °C.
[2] This is the increase in supply current for each input that is at the specified TTL voltage level rather than V_{CC} or GND.
[3] Measured by the voltage drop between the nA and the nBn terminals at the indicated current through the switch. The lowest voltage of the two (nA or nBn) terminals determines the ON resistance.

All information provided in this document is subject to legal disclaimers.

© Nexperia B.V. 2019. All rights reserved

10. Dynamic characteristics

Table 7. Dynamic characteristics

T_{amb} = -40 °C to +85 °C; V_{CC} = 4.5 V to 5.5 V; for test circuit see Fig. 7.

Symbol	Parameter	Conditions		Min	Max	Unit
t_{pd}	propagation delay	nA to nBn or nBn to nA; see Fig. 5	[1][2]	-	0.25	ns
		S to nA; see Fig. 5	[1][2]	1.4	5.0	ns
t_{en}	enable time	$\overline{OE}$ to nA or nBn; see Fig. 6	[2]	1.5	5.1	ns
		S to nBn; see Fig. 6	[2]	1.4	5.2	ns
t_{dis}	disable time	$\overline{OE}$ to nA or nBn; see Fig. 6	[2]	2.2	5.5	ns
		S to nBn; see Fig. 6	[2]	1.0	5.0	ns

[1] This parameter is warranted but not production tested. The propagation delay is based on the RC time constant of the typical ON resistance of the switch and a load capacitance, when driven by an ideal voltage source (zero output impedance).

[2] t_{PLH} and t_{PHL} are the same as t_{pd}; t_{PZL} and t_{PZH} are the same as t_{en}; t_{PLZ} and t_{PHZ} are the same as t_{dis}.

10.1. Waveforms and test circuit

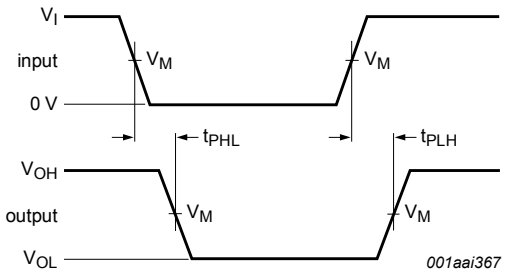

Measurement points are given in Table 8.

V_{OL} and V_{OH} are typical voltage output levels that occur with the output load.

Fig. 5. The input (nA; nBn) to output (nBn; nA) or input (S) to output (nA) propagation delay times

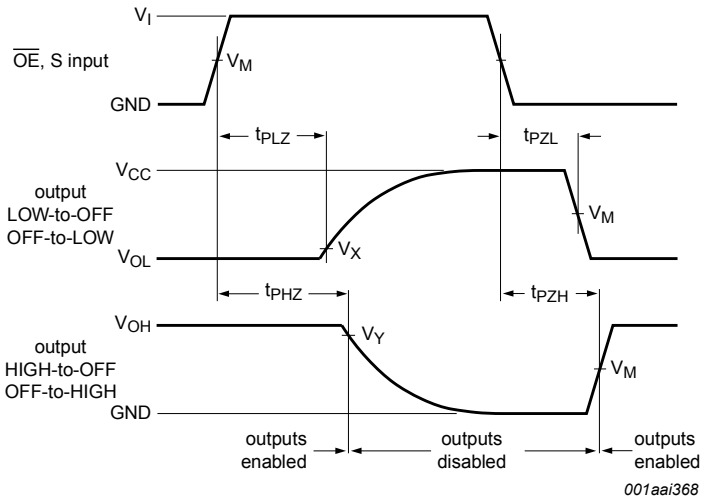

Measurement points are given in Table 8.

V_{OL} and V_{OH} are typical voltage output levels that occur with the output load.

Fig. 6. Enable and disable times

All information provided in this document is subject to legal disclaimers.

© Nexperia B.V. 2019. All rights reserved

Table 8. Measurement points

Supply voltage	Input		Output		
V_{CC}	V_I	V_M	V_M	V_X	V_Y
4.5 V to 5.5 V	GND to 3.0 V	1.5 V	1.5 V	V_{OL} + 0.3 V	V_{OH} - 0.3 V

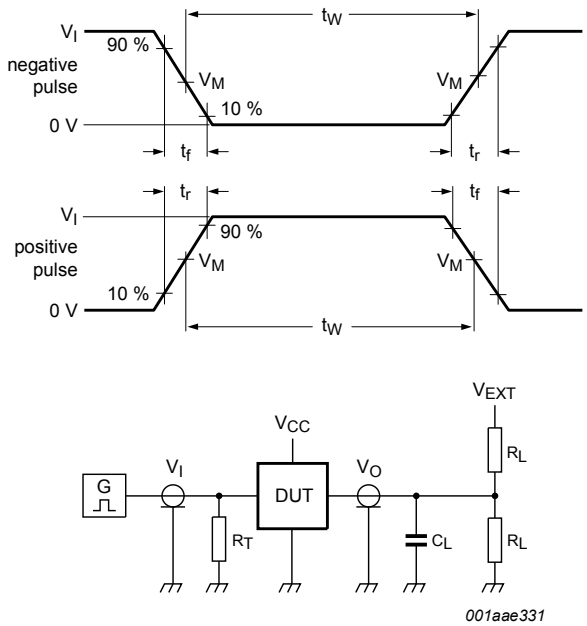

Test data is given in Table 9.

Definitions for test circuit:

R_L = Load resistance.

C_L = Load capacitance including jig and probe capacitance.

R_T = Termination resistance should be equal to the output impedance Z_o of the pulse generator.

V_{EXT} = External voltage for measuring switching times.

Fig. 7. Test circuit for measuring switching times

Table 9. Test data

Supply voltage	Input		Load		V_{EXT}		
V_{CC}	V_I	t_r, t_f	C_L	R_L	t_{PLH}, t_{PHL}	t_{PLZ}, t_{PZL}	t_{PHZ}, t_{PZH}
4.5 V to 5.5 V	GND to 3.0 V	≤ 2.5 ns	50 pF	500 Ω	open	7.0 V	open

All information provided in this document is subject to legal disclaimers.

© Nexperia B.V. 2019. All rights reserved

11. Package outline

SO16: plastic small outline package; 16 leads; body width 3.9 mm **SOT109-1**

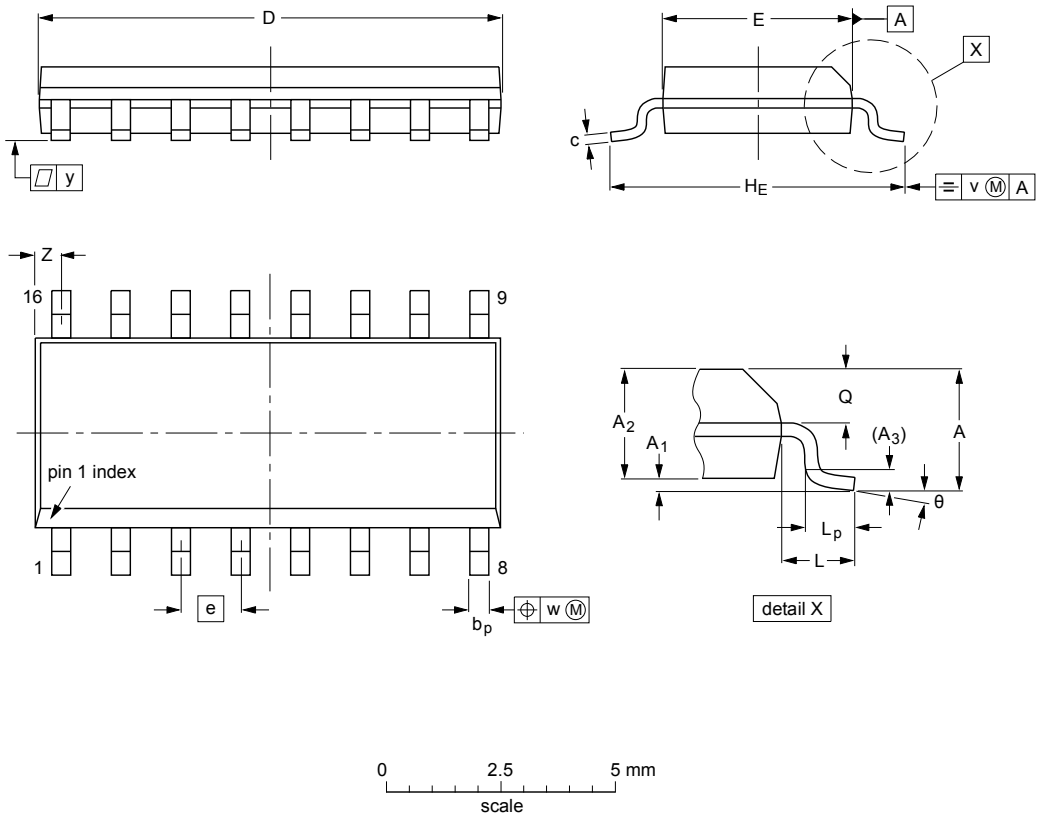

DIMENSIONS (inch dimensions are derived from the original mm dimensions)

UNIT	A max.	A_1	A_2	A_3	b_p	c	D(1)	E(1)	e	H_E	L	L_p	Q	v	w	y	Z(1)	θ
mm	1.75	0.25 0.10	1.45 1.25	0.25	0.49 0.36	0.25 0.19	10.0 9.8	4.0 3.8	1.27	6.2 5.8	1.05	1.0 0.4	0.7 0.6	0.25	0.25	0.1	0.7 0.3	8° 0°
inches	0.069	0.010 0.004	0.057 0.049	0.01	0.019 0.014	0.0100 0.0075	0.39 0.38	0.16 0.15	0.05	0.244 0.228	0.041	0.039 0.016	0.028 0.020	0.01	0.01	0.004	0.028 0.012	

Note

1. Plastic or metal protrusions of 0.15 mm (0.006 inch) maximum per side are not included.

OUTLINE VERSION	REFERENCES				EUROPEAN PROJECTION	ISSUE DATE
	IEC	JEDEC	JEITA			
SOT109-1	076E07	MS-012				~~99-12-27~~ 03-02-19

Fig. 8. Package outline SOT109-1 (SO16)

All information provided in this document is subject to legal disclaimers.

© Nexperia B.V. 2019. All rights reserved

SSOP16: plastic shrink small outline package; 16 leads; body width 5.3 mm **SOT338-1**

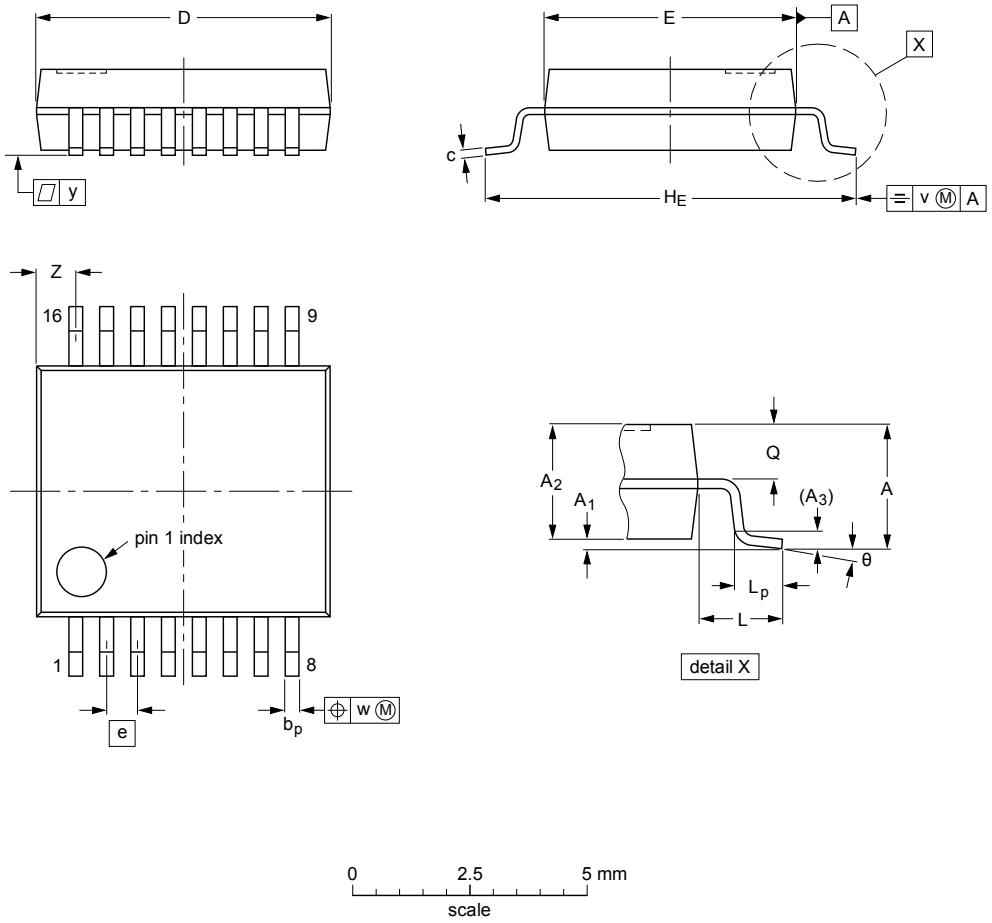

DIMENSIONS (mm are the original dimensions)

UNIT	A max.	A_1	A_2	A_3	b_p	c	D (1)	E (1)	e	H_E	L	L_p	Q	v	w	y	Z (1)	θ
mm	2	0.21 0.05	1.80 1.65	0.25	0.38 0.25	0.20 0.09	6.4 6.0	5.4 5.2	0.65	7.9 7.6	1.25	1.03 0.63	0.9 0.7	0.2	0.13	0.1	1.00 0.55	8° 0°

Note

1. Plastic or metal protrusions of 0.25 mm maximum per side are not included.

OUTLINE VERSION	REFERENCES				EUROPEAN PROJECTION	ISSUE DATE
	IEC	JEDEC	JEITA			
SOT338-1		MO-150				~~99-12-27~~ 03-02-19

Fig. 9. Package outline SOT338-1 (SSOP16)

All information provided in this document is subject to legal disclaimers.

© Nexperia B.V. 2019. All rights reserved

SSOP16: plastic shrink small outline package; 16 leads; body width 3.9 mm; lead pitch 0.635 mm **SOT519-1**

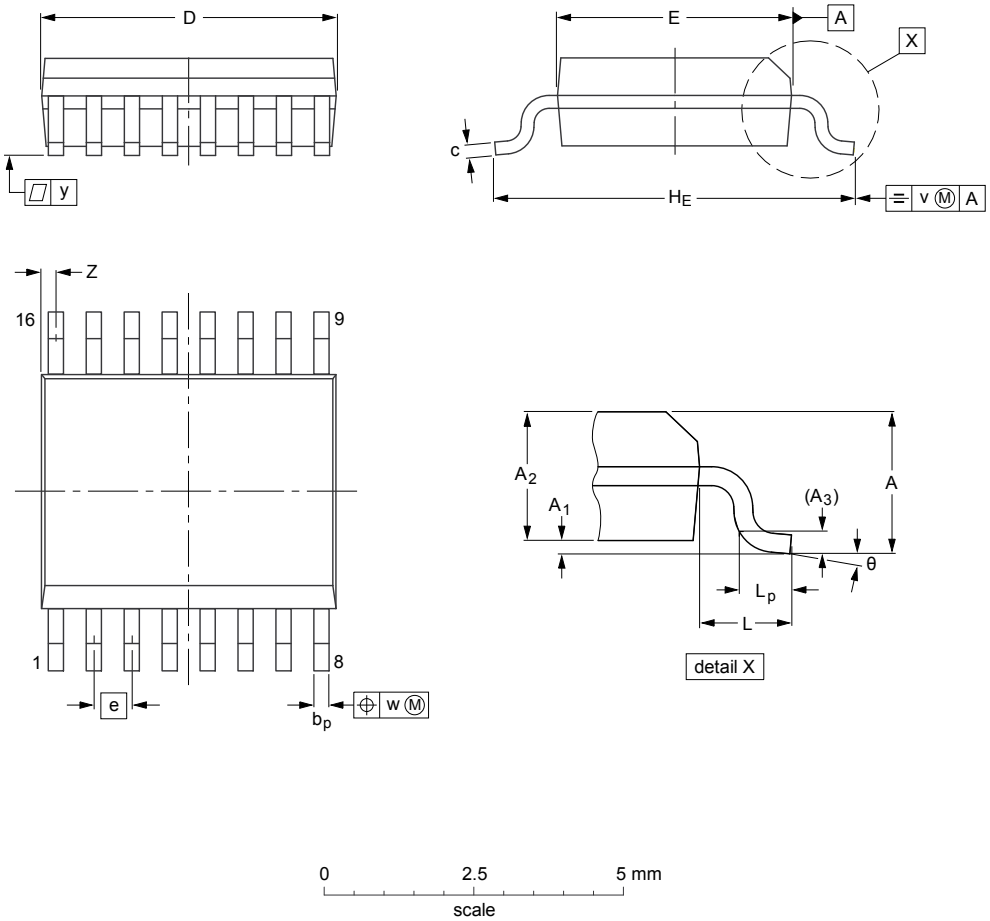

DIMENSIONS (mm are the original dimensions)

UNIT	A max.	A_1	A_2	A_3	b_p	c	D (1)	E (1)	e	H_E	L	L_p	v	w	y	Z (1)	θ
mm	1.73	0.25 0.10	1.55 1.40	0.25	0.31 0.20	0.25 0.18	5.0 4.8	4.0 3.8	0.635	6.2 5.8	1	0.89 0.41	0.2	0.18	0.09	0.18 0.05	8° 0°

Note

1. Plastic or metal protrusions of 0.2 mm maximum per side are not included.

OUTLINE VERSION	REFERENCES				EUROPEAN PROJECTION	ISSUE DATE
	IEC	JEDEC	JEITA			
SOT519-1						~~99-05-04~~ 03-02-18

Fig. 10. Package outline SOT519-1 (SSOP16)

All information provided in this document is subject to legal disclaimers.

© Nexperia B.V. 2019. All rights reserved

TSSOP16: plastic thin shrink small outline package; 16 leads; body width 4.4 mm **SOT403-1**

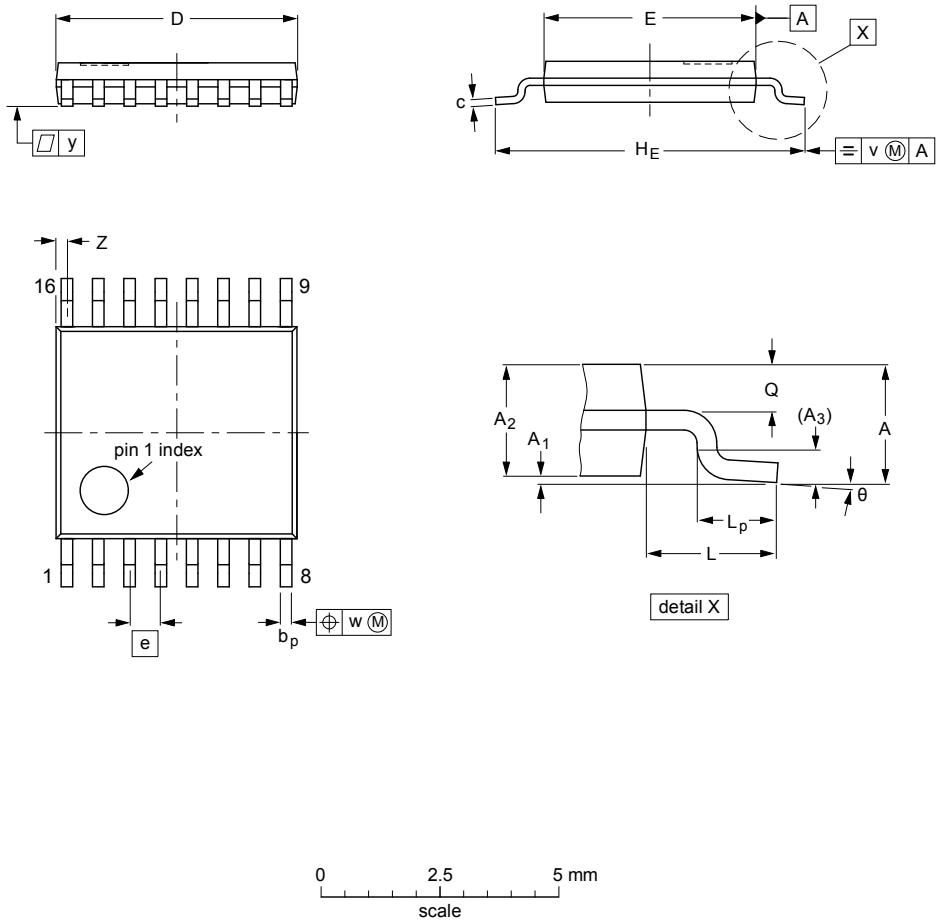

DIMENSIONS (mm are the original dimensions)

UNIT	A max.	A_1	A_2	A_3	b_p	c	D (1)	E (2)	e	H_E	L	L_p	Q	v	w	y	Z (1)	θ
mm	1.1	0.15 0.05	0.95 0.80	0.25	0.30 0.19	0.2 0.1	5.1 4.9	4.5 4.3	0.65	6.6 6.2	1	0.75 0.50	0.4 0.3	0.2	0.13	0.1	0.40 0.06	8° 0°

Notes

1. Plastic or metal protrusions of 0.15 mm maximum per side are not included.
2. Plastic interlead protrusions of 0.25 mm maximum per side are not included.

OUTLINE VERSION	REFERENCES				EUROPEAN PROJECTION	ISSUE DATE
	IEC	JEDEC	JEITA			
SOT403-1		MO-153				~~99-12-27~~ 03-02-18

Fig. 11. Package outline SOT403-1 (TSSOP16)

All information provided in this document is subject to legal disclaimers.

© Nexperia B.V. 2019. All rights reserved

DHVQFN16: plastic dual in-line compatible thermal enhanced very thin quad flat package; no leads; 16 terminals; body 2.5 x 3.5 x 0.85 mm **SOT763-1**

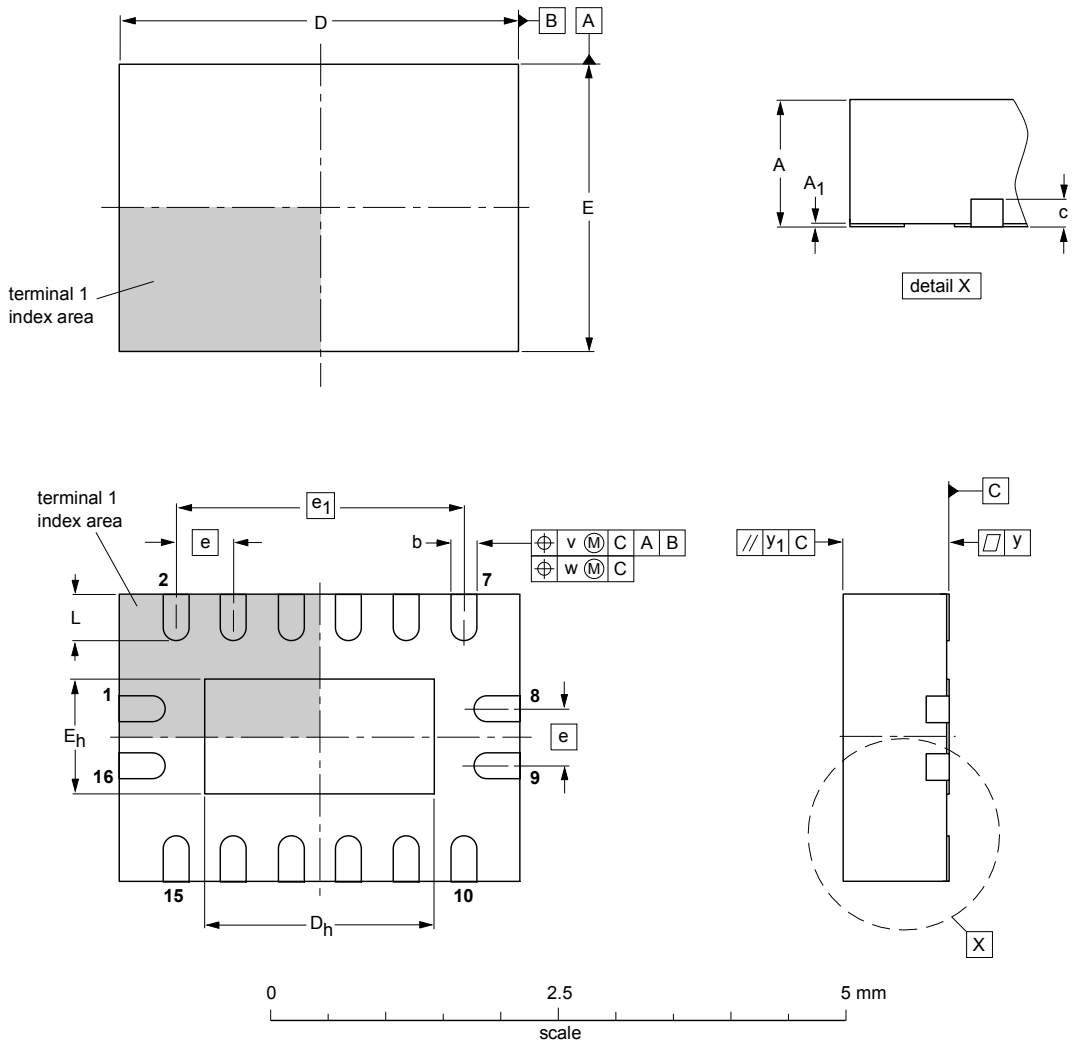

DIMENSIONS (mm are the original dimensions)

UNIT	A(1) max.	A_1	b	c	D(1)	D_h	E(1)	E_h	e	e_1	L	v	w	y	y_1
mm	1	0.05 0.00	0.30 0.18	0.2	3.6 3.4	2.15 1.85	2.6 2.4	1.15 0.85	0.5	2.5	0.5 0.3	0.1	0.05	0.05	0.1

Note

1. Plastic or metal protrusions of 0.075 mm maximum per side are not included.

OUTLINE VERSION	REFERENCES				EUROPEAN PROJECTION	ISSUE DATE
	IEC	JEDEC	JEITA			
SOT763-1	- - -	MO-241	- - -			~~02-10-17~~ 03-01-27

Fig. 12. Package outline SOT763-1 (DHVQFN16)

All information provided in this document is subject to legal disclaimers.

© Nexperia B.V. 2019. All rights reserved

12. Abbreviations

Table 10. Abbreviations

Acronym	Description
CDM	Charged Device Model
ESD	ElectroStatic Discharge
HBM	Human Body Model
MM	Machine Model
TTL	Transistor-Transistor Logic

13. Revision history

Table 11. Revision history

Document ID	Release date	Data sheet status	Change notice	Supersedes
CBT3257A v.6	20190620	Product data sheet	-	CBT3257A v.5
Modifications:	• The format of this data sheet has been redesigned to comply with the identity guidelines of Nexperia. • Legal texts have been adapted to the new company name where appropriate.			
CBT3257A v.5	20130404	Product data sheet	-	CBT3257A v.4
Modifications:	Table 6: values for pass voltage modified.			
CBT3257A v.4	20090319	Product data sheet	-	CBT3257A v.3
CBT3257A v.3	20080704	Product data sheet	-	CBT3257A v.2
CBT3257A v.2	20070704	Product data sheet	-	CBT3257A v.1
CBT3257A v.1	20051027	Product data sheet	-	-

All information provided in this document is subject to legal disclaimers.

© Nexperia B.V. 2019. All rights reserved

14. Legal information

Data sheet status

Document status [1][2]	Product status [3]	Definition
Objective [short] data sheet	Development	This document contains data from the objective specification for product development.
Preliminary [short] data sheet	Qualification	This document contains data from the preliminary specification.
Product [short] data sheet	Production	This document contains the product specification.

[1] Please consult the most recently issued document before initiating or completing a design.
[2] The term 'short data sheet' is explained in section "Definitions".
[3] The product status of device(s) described in this document may have changed since this document was published and may differ in case of multiple devices. The latest product status information is available on the internet at https://www.nexperia.com.

Definitions

Draft — The document is a draft version only. The content is still under internal review and subject to formal approval, which may result in modifications or additions. Nexperia does not give any representations or warranties as to the accuracy or completeness of information included herein and shall have no liability for the consequences of use of such information.

Short data sheet — A short data sheet is an extract from a full data sheet with the same product type number(s) and title. A short data sheet is intended for quick reference only and should not be relied upon to contain detailed and full information. For detailed and full information see the relevant full data sheet, which is available on request via the local Nexperia sales office. In case of any inconsistency or conflict with the short data sheet, the full data sheet shall prevail.

Product specification — The information and data provided in a Product data sheet shall define the specification of the product as agreed between Nexperia and its customer, unless Nexperia and customer have explicitly agreed otherwise in writing. In no event however, shall an agreement be valid in which the Nexperia product is deemed to offer functions and qualities beyond those described in the Product data sheet.

Disclaimers

Limited warranty and liability — Information in this document is believed to be accurate and reliable. However, Nexperia does not give any representations or warranties, expressed or implied, as to the accuracy or completeness of such information and shall have no liability for the consequences of use of such information. Nexperia takes no responsibility for the content in this document if provided by an information source outside of Nexperia.

In no event shall Nexperia be liable for any indirect, incidental, punitive, special or consequential damages (including - without limitation - lost profits, lost savings, business interruption, costs related to the removal or replacement of any products or rework charges) whether or not such damages are based on tort (including negligence), warranty, breach of contract or any other legal theory.

Notwithstanding any damages that customer might incur for any reason whatsoever, Nexperia's aggregate and cumulative liability towards customer for the products described herein shall be limited in accordance with the Terms and conditions of commercial sale of Nexperia.

Right to make changes — Nexperia reserves the right to make changes to information published in this document, including without limitation specifications and product descriptions, at any time and without notice. This document supersedes and replaces all information supplied prior to the publication hereof.

Suitability for use — Nexperia products are not designed, authorized or warranted to be suitable for use in life support, life-critical or safety-critical systems or equipment, nor in applications where failure or malfunction of an Nexperia product can reasonably be expected to result in personal injury, death or severe property or environmental damage. Nexperia and its suppliers accept no liability for inclusion and/or use of Nexperia products in such equipment or applications and therefore such inclusion and/or use is at the customer's own risk.

Quick reference data — The Quick reference data is an extract of the product data given in the Limiting values and Characteristics sections of this document, and as such is not complete, exhaustive or legally binding.

Applications — Applications that are described herein for any of these products are for illustrative purposes only. Nexperia makes no representation or warranty that such applications will be suitable for the specified use without further testing or modification.

Customers are responsible for the design and operation of their applications and products using Nexperia products, and Nexperia accepts no liability for any assistance with applications or customer product design. It is customer's sole responsibility to determine whether the Nexperia product is suitable and fit for the customer's applications and products planned, as well as for the planned application and use of customer's third party customer(s). Customers should provide appropriate design and operating safeguards to minimize the risks associated with their applications and products.

Nexperia does not accept any liability related to any default, damage, costs or problem which is based on any weakness or default in the customer's applications or products, or the application or use by customer's third party customer(s). Customer is responsible for doing all necessary testing for the customer's applications and products using Nexperia products in order to avoid a default of the applications and the products or of the application or use by customer's third party customer(s). Nexperia does not accept any liability in this respect.

Limiting values — Stress above one or more limiting values (as defined in the Absolute Maximum Ratings System of IEC 60134) will cause permanent damage to the device. Limiting values are stress ratings only and (proper) operation of the device at these or any other conditions above those given in the Recommended operating conditions section (if present) or the Characteristics sections of this document is not warranted. Constant or repeated exposure to limiting values will permanently and irreversibly affect the quality and reliability of the device.

Terms and conditions of commercial sale — Nexperia products are sold subject to the general terms and conditions of commercial sale, as published at http://www.nexperia.com/profile/terms, unless otherwise agreed in a valid written individual agreement. In case an individual agreement is concluded only the terms and conditions of the respective agreement shall apply. Nexperia hereby expressly objects to applying the customer's general terms and conditions with regard to the purchase of Nexperia products by customer.

No offer to sell or license — Nothing in this document may be interpreted or construed as an offer to sell products that is open for acceptance or the grant, conveyance or implication of any license under any copyrights, patents or other industrial or intellectual property rights.

Export control — This document as well as the item(s) described herein may be subject to export control regulations. Export might require a prior authorization from competent authorities.

Non-automotive qualified products — Unless this data sheet expressly states that this specific Nexperia product is automotive qualified, the product is not suitable for automotive use. It is neither qualified nor tested in accordance with automotive testing or application requirements. Nexperia accepts no liability for inclusion and/or use of non-automotive qualified products in automotive equipment or applications.

In the event that customer uses the product for design-in and use in automotive applications to automotive specifications and standards, customer (a) shall use the product without Nexperia's warranty of the product for such automotive applications, use and specifications, and (b) whenever customer uses the product for automotive applications beyond Nexperia's specifications such use shall be solely at customer's own risk, and (c) customer fully indemnifies Nexperia for any liability, damages or failed product claims resulting from customer design and use of the product for automotive applications beyond Nexperia's standard warranty and Nexperia's product specifications.

Translations — A non-English (translated) version of a document is for reference only. The English version shall prevail in case of any discrepancy between the translated and English versions.

Trademarks

Notice: All referenced brands, product names, service names and trademarks are the property of their respective owners.

All information provided in this document is subject to legal disclaimers.

© Nexperia B.V. 2019. All rights reserved

Contents

1. General description.....1
2. Features and benefits.....1
3. Ordering information.....1
4. Functional diagram.....2
5. Pinning information.....2
5.1. Pinning.....2
5.2. Pin description.....3
6. Functional description.....3
7. Limiting values.....3
8. Recommended operating conditions.....4
9. Static characteristics.....4
10. Dynamic characteristics.....5
10.1. Waveforms and test circuit.....5
11. Package outline.....7
12. Abbreviations.....12
13. Revision history.....12
14. Legal information.....13

© Nexperia B.V. 2019. All rights reserved

For more information, please visit: http://www.nexperia.com
For sales office addresses, please send an email to: salesaddresses@nexperia.com
Date of release: 20 June 2019

Общество с ограниченной ответственностью «МосЧип» ИНН 7719860671 / КПП 771901001
Адрес: 105318, г.Москва, ул.Щербаковская д.3, офис 1107

Данный компонент на территории Российской Федерации

Вы можете приобрести в компании MosChip.

Для оперативного оформления запроса Вам необходимо перейти по данной ссылке:

http://moschip.ru/get-element

Вы можете разместить у нас заказ для любого Вашего проекта, будь то серийное производство или разработка единичного прибора.

В нашем ассортименте представлены ведущие мировые производители активных и пассивных электронных компонентов.

Нашей специализацией является поставка электронной компонентной базы двойного назначения, продукции таких производителей как XILINX, Intel (ex.ALTERA), Vicor, Microchip, Texas Instruments, Analog Devices, Mini-Circuits, Amphenol, Glenair.

Сотрудничество с глобальными дистрибьюторами электронных компонентов, предоставляет возможность заказывать и получать с международных складов практически любой перечень компонентов в оптимальные для Вас сроки.

На всех этапах разработки и производства наши партнеры могут получить квалифицированную поддержку опытных инженеров.

Система менеджмента качества компании отвечает требованиям в соответствии с ГОСТ Р ИСО 9001, ГОСТ РВ 0015-002 и ЭС РД 009

Офис по работе с юридическими лицами:

105318, г.Москва, ул.Щербаковская д.3, офис 1107, 1118, ДЦ «Щербаковский»

Телефон: +7 495 668-12-70 (многоканальный)

Факс: +7 495 668-12-70 (доб.304)

E-mail: info@moschip.ru

Skype отдела продаж:
moschip.ru
moschip.ru_4
moschip.ru_6
moschip.ru_9