SINGLE TURN WIREWOUND TRIMMERS λ-6/λ-13

RoHS compliant

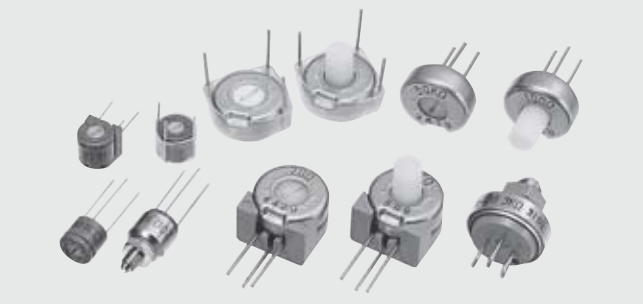

■FEATURES

- Low temperature coefficient of resistance
- Low contact resistance

INTERNAL STRUCTURE
λ-13T

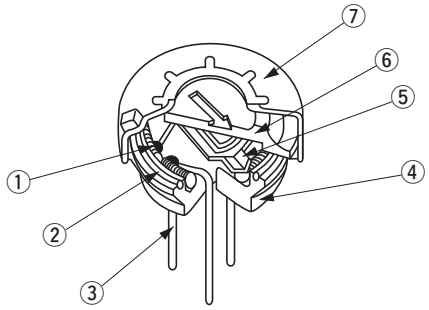

	Part name	Material	Flammability
①	Resistive element	—	—
②	"O" ring	Silicone rubber	UL-94HB
③	Terminal pin	Nickel, Gold-plated	—
④	Base	DAP	UL-94HB
⑤	Wiper	Copper alloy, Palladium-plated	—
⑥	Wheel	Polyoxymethylene	UL-94HB
⑦	Cover	Stainless steel	—

■PART NUMBER DESIGNATION

λ - 6 T 1 0 Ω
(1 1 0 6)

Series name
λ-6 : φ 6.6 mm (1106)
λ-13 : φ 13.5 mm (1113)

※"λ" may be replaced by 11 for type writing conveniences.

Product shape
T : Top adjustment
S : Side adjustment
F : Rear adjustment
B : Panel mount
TR : Top adjustment with knob
SR : Side adjustment with knob
FR : Rear adjustment with knob

Resistance value

※Please refer to the LIST OF PART NUMBERS when placing orders.

■Specifications are subject to change without notice. Specifications in this catalog are for reference. The formal specification sheets will be submitted upon request.

λ-6/λ-13
WIREWOUND TRIMMERS

■LIST OF PART NUMBERS

Adjustment position	Dimension	
	φ 6.6 mm	φ 13.5 mm
Top adjustment	λ-6T (1106T)	λ-13T (1113T)
Top adjustment with knob		λ-13TR (1113TR)
Side adjustment	λ-6S (1106S)	λ-13S (1113S)
Side adjustment with knob		λ-13SR (1113SR)
Panel mount	λ-6B (1106B)	λ-13B (1113B)
Rear adjustment	λ-6F (1106F)	λ-13F (1113F)
Rear adjustment with knob		λ-13FR (1113FR)

: Not manufactured
※Verify the above part numbers <Nominal resistance values> (Fig. 1) when placing orders.

〈Nominal resistance values〉

	λ-6 (1106)				λ-13 (1113)						
	T	S	B	F	T	TR	S	SR	B	F	FR
10 Ω	●	●	➔●	➔●	●	➔●	●	➔●	●	➔●	➔●
20 Ω	●	●	➔●	➔●	●	➔●	●	➔●	●	➔●	➔●
50 Ω	●	●	➔●	➔●	●	➔●	●	➔●	●	➔●	➔●
100 Ω	●	●	●	➔●	●	➔●	●	➔●	●	➔●	➔●
200 Ω	●	●	●	➔●	●	➔●	●	➔●	●	➔●	➔●
500 Ω	●	●	●	➔●	●	➔●	●	➔●	●	➔●	➔●
1 kΩ	●	●	●	➔●	●	➔●	●	➔●	●	➔●	➔●
2 kΩ	●	●	●	➔●	●	➔●	●	➔●	●	➔●	➔●
5 kΩ	●	●	●	➔●	●	➔●	●	➔●	●	➔●	➔●
10 kΩ	●	●	●	➔●	●	➔●	●	➔●	●	➔●	➔●
20 kΩ	●	●	●	➔●	●	➔●	●	➔●	●	➔●	➔●
25 kΩ					➔●	➔●	➔●	➔●	➔●	➔●	➔●
30 kΩ	➔●	➔●	➔●	➔●							
50 kΩ					●	➔●	●	➔●	●	➔●	➔●
100 kΩ					●	➔●	●	➔●	●	➔●	➔●

Fig. 1

The products indicated by ➔ mark are manufactured upon receipt of order basis.

■ELECTRICAL CHARACTERISTICS

	λ-6 (1106)	λ-13 (1113)
Nominal resistance range	10 Ω ~ 30 kΩ	10 Ω ~ 100 kΩ
Resistance tolerance	± 10 %	
Power rating ※1	0.37 W (70 °C) 0 W (120 °C)	0.75 W (70 °C) 0 W (120 °C)
Electrical continuity	Continuous for full mechanical range	
End resistance	2 % or 1 Ω, whichever is greater	
Resolution	1.42 ~ 0.14 %	1.07 ~ 0.08 %
Peak noise	100 Ω (ENR) maximum	
Operating temp. range	−55 ~ 120 °C	
Temp. coefficient	± 50 10^{-6}/°C maximum	
Insulation resistance	1000 MΩ minimum (DC500 V)	
Dielectric strength	900 Vrms, 1 min (Room conditions)	
Net weight	Approx. 0.34 g (λ-6T) Approx. 0.47 g (λ-6S) Approx. 1.41 g (λ-6B) Approx. 0.39 g (λ-6F)	Approx. 1.60 g (λ-13T) Approx. 2.59 g (λ-13S) Approx. 5.16 g (λ-13B) Approx. 1.73 g (λ-13TR) Approx. 2.72 g (λ-13SR) Approx. 1.86 g (λ-13F) Approx. 1.93 g (λ-13FR)

■MECHANICAL CHARACTERISTICS

	λ-6 (1106)	λ-13 (1113)
Mechanical angle	310 ° (1 turn)	
Operating torque	7.85 mN·m {80 gf·cm} maximum	19.61 mN·m {200 gf·cm} maximum
Stop strength	49.04 mN·m {500 gf·cm} minimum	98.07 mN·m {1 kgf·cm} minimum
Rotational life	200 cycles [⊿R/R ≦ 2 %]	
Terminal strength	8.89 N {907 gf} minimum (Tensile strength MIL-R-27208)	

{ } : Reference only

※1 Rated power is given for the maximum input voltage (V) and maximum wiper current (mA) for the resistance value.

■Specifications are subject to change without notice. Specifications in this catalog are for reference. The formal specification sheets will be submitted upon request.

λ-6/λ-13
WIREWOUND TRIMMERS

■ENVIRONMENTAL CHARACTERISTICS

(In accordance with MIL-R-27208)

Test item	Test conditions	Specifications
Thermal shock	−65 ~ 125 °C, 5 cycles	[ΔR/R ≦ 1 % +0.05Ω] [S.S. ≦ 1 % +Resolution]
Humidity	80 ~ 98 %, 240 h	[ΔR/R ≦ 1 % +0.05Ω]
Shock	981 m/s²	[ΔR/R ≦ 1 % +0.05Ω] [S.S. ≦ 1 % +Resolution]
Vibration	Acceleration 196 m/s², 10 ~ 2000 Hz	
Load life	70 °C (Full load), 1000 h	[ΔR/R ≦ 2 %] [S.S. ≦ 2 % +Resolution]
Low temp. operation	−55 °C, 2 h	[ΔR/R ≦ 1 % +0.05Ω] [S.S. ≦ 1 % +Resolution]
High temp. exposure	120 °C, 250 h	
Immersion seal	85 °C	No leaks
Salt spray	No corrosion	—
Soldering heat	350 °C, 3 s	—

ΔR/R : Change in total resistance
S.S. : Setting stability

■RESOLUTION CHARACTERISTICS

Nominal resistance values (Ω)	Resolution (%)	
	λ-6 (1106)	λ-13 (1113)
10	1.42	1.07
20	1.14	0.83
50	0.91	0.71
100	0.74	0.57
200	0.56	0.42
500	0.54	0.35
1 k	0.48	0.40
2 k	0.34	0.27
5 k	0.28	0.20
10 k	0.22	0.19
20 k	0.17	0.12
25 k	—	0.11
30 k	0.14	—
50 k	—	0.10
100 k	—	0.08

■Specifications are subject to change without notice. Specifications in this catalog are for reference. The formal specification sheets will be submitted upon request.

λ-6/λ-13
WIREWOUND TRIMMERS

■OUTLINE DIMENSIONS

Unless otherwise specified, tolerance : ± 0.2 (Unit : mm)

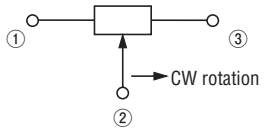

● λ-6T (1106T)
Top adjustment

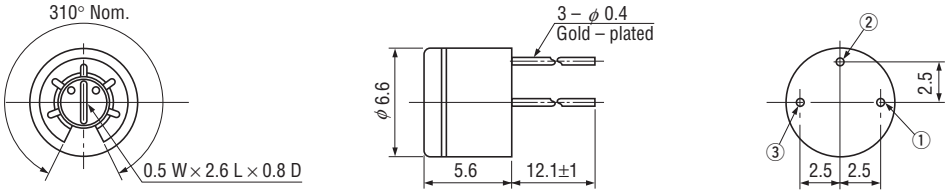

● λ-6S (1106S)
Side adjustment

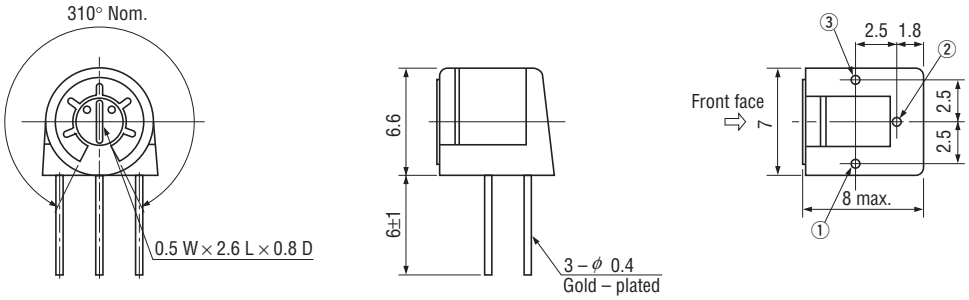

● λ-6B (1106B)
Panel mount

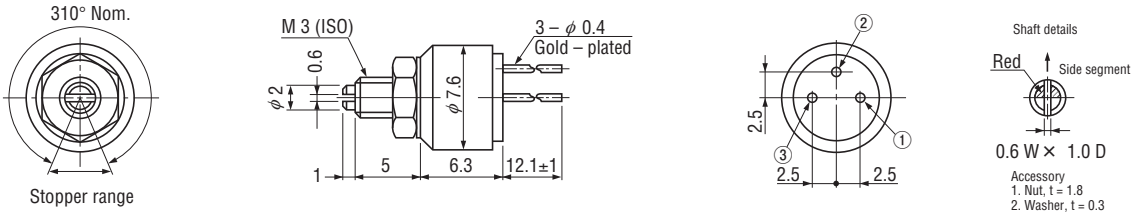

● λ-6F (1106F)
Rear adjustment

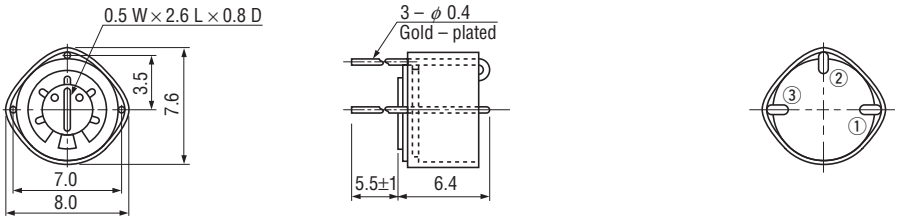

λ-6 / λ-13
WIREWOUND TRIMMERS

■OUTLINE DIMENSIONS

Unless otherwise specified, tolerance : ± 0.2 (Unit : mm)

● λ-13T (1113T)
Top adjustment

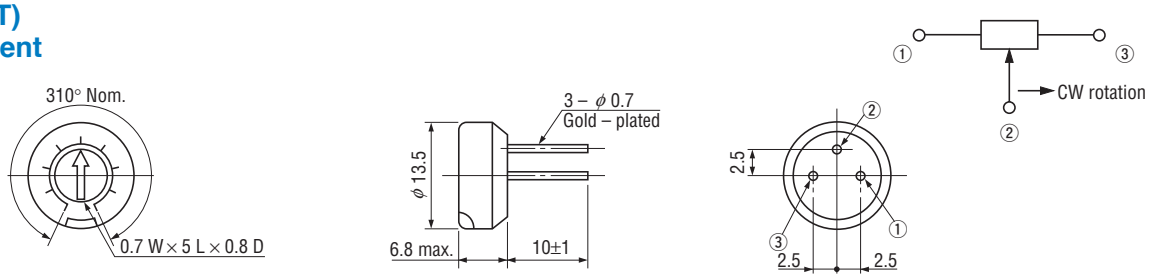

● λ-13TR (1113TR)
Top adjustment with knob

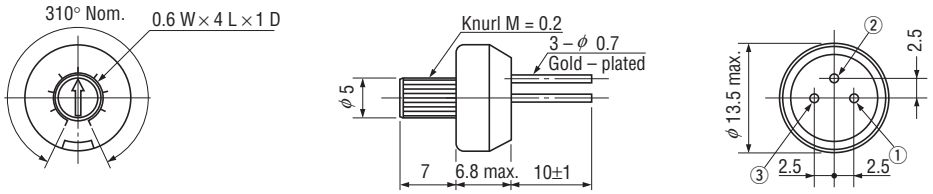

● λ-13S (1113S)
Side adjustment

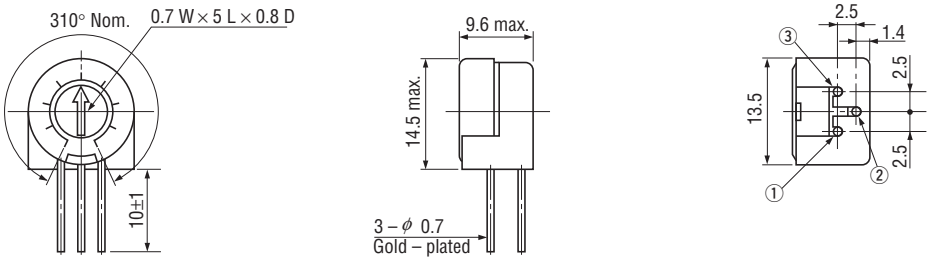

● λ-13SR (1113SR)
Side adjustment with knob

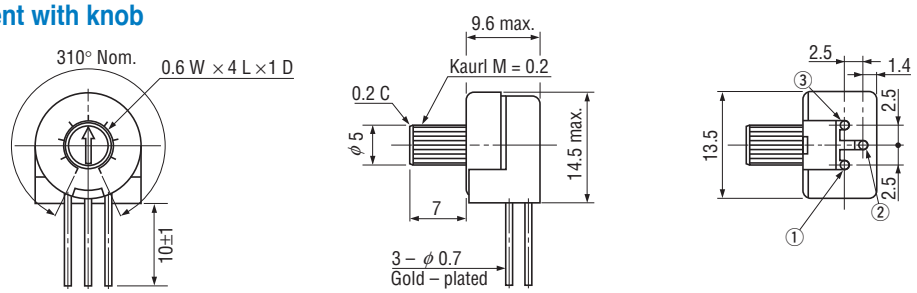

● λ-13B (1113B)
Panel mount

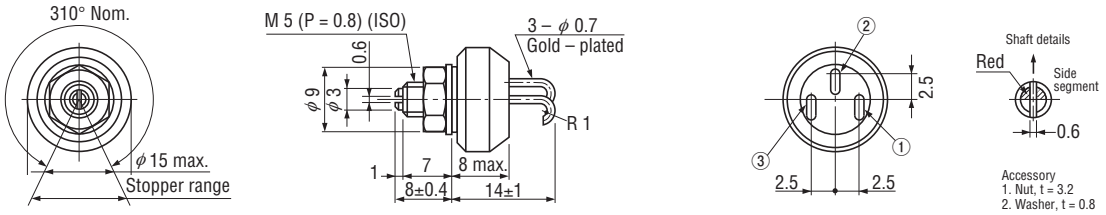

■Specifications are subject to change without notice. Specifications in this catalog are for reference. The formal specification sheets will be submitted upon request.

λ-6/λ-13
WIREWOUND TRIMMERS

■OUTLINE DIMENSIONS

Unless otherwise specified, tolerance : ± 0.2 (Unit : mm)

● λ-13F (1113F)
Rear adjustment

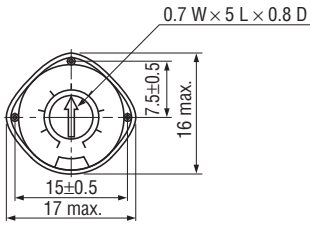

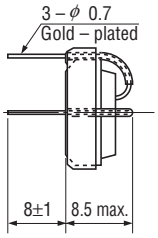

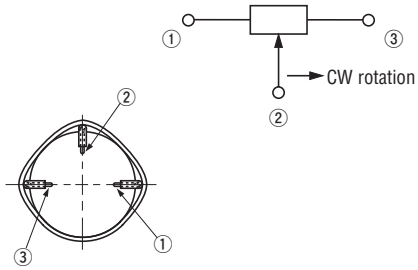

● λ-13FR (1113FR)
Rear adjustment with knob

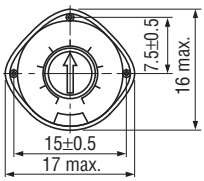

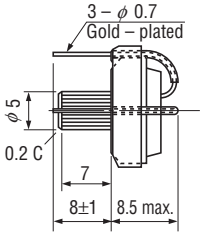

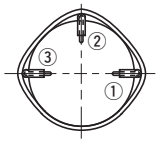

Общество с ограниченной ответственностью «МосЧип» ИНН 7719860671 / КПП 771901001
Адрес: 105318, г.Москва, ул.Щербаковская д.3, офис 1107

Данный компонент на территории Российской Федерации

Вы можете приобрести в компании MosChip.

Для оперативного оформления запроса Вам необходимо перейти по данной ссылке:

http://moschip.ru/get-element

Вы можете разместить у нас заказ для любого Вашего проекта, будь то серийное производство или разработка единичного прибора.

В нашем ассортименте представлены ведущие мировые производители активных и пассивных электронных компонентов.

Нашей специализацией является поставка электронной компонентной базы двойного назначения, продукции таких производителей как XILINX, Intel (ex.ALTERA), Vicor, Microchip, Texas Instruments, Analog Devices, Mini-Circuits, Amphenol, Glenair.

Сотрудничество с глобальными дистрибьюторами электронных компонентов, предоставляет возможность заказывать и получать с международных складов практически любой перечень компонентов в оптимальные для Вас сроки.

На всех этапах разработки и производства наши партнеры могут получить квалифицированную поддержку опытных инженеров.

Система менеджмента качества компании отвечает требованиям в соответствии с ГОСТ Р ИСО 9001, ГОСТ РВ 0015-002 и ЭС РД 009

Офис по работе с юридическими лицами:

105318, г.Москва, ул.Щербаковская д.3, офис 1107, 1118, ДЦ «Щербаковский»

Телефон: +7 495 668-12-70 (многоканальный)

Факс: +7 495 668-12-70 (доб.304)

E-mail: info@moschip.ru

Skype отдела продаж:
moschip.ru
moschip.ru_4
moschip.ru_6
moschip.ru_9