MAX 9000

Programmable Logic Device Family

Includes MAX 9000A

June 2003, ver. 6.5 Data Sheet

Features…

- High-performance CMOS EEPROM-based programmable logic devices (PLDs) built on third-generation Multiple Array MatriX (MAX®) architecture
- 5.0-V in-system programmability (ISP) through built-in IEEE Std. 1149.1 Joint Test Action Group (JTAG) interface
- Built-in JTAG boundary-scan test (BST) circuitry compliant with IEEE Std. 1149.1-1990
- High-density erasable programmable logic device (EPLD) family ranging from 6,000 to 12,000 usable gates (see Table 1)
- 10-ns pin-to-pin logic delays with counter frequencies of up to 144 MHz
- Fully compliant with the peripheral component interconnect Special Interest Group's (PCI SIG) ***PCI Local Bus Specification, Revision 2.2***
- Dual-output macrocell for independent use of combinatorial and registered logic
- FastTrack® Interconnect for fast, predictable interconnect delays
- Input/output registers with clear and clock enable on all I/O pins
- Programmable output slew-rate control to reduce switching noise
- MultiVolt™ I/O interface operation, allowing devices to interface with 3.3-V and 5.0-V devices
- Configurable expander product-term distribution allowing up to 32 product terms per macrocell
- Programmable power-saving mode for more than 50% power reduction in each macrocell

Table 1. MAX 9000 Device Features

Feature	EPM9320 EPM9320A	EPM9400	EPM9480	EPM9560 EPM9560A
Usable gates	6,000	8,000	10,000	12,000
Flipflops	484	580	676	772
Macrocells	320	400	480	560
Logic array blocks (LABs)	20	25	30	35
Maximum user I/O pins	168	159	175	216
t_{PD1} (ns)	10	15	10	10
t_{FSU} (ns)	3.0	5	3.0	3.0
t_{FCO} (ns)	4.5	7	4.8	4.8
f_{CNT} (MHz)	144	118	144	144

…and More Features

- Programmable macrocell flipflops with individual clear, preset, clock, and clock enable controls
- Programmable security bit for protection of proprietary designs
- Software design support and automatic place-and-route provided by Altera's MAX+PLUS® II development system on Windows-based PCs as well as Sun SPARCstation, HP 9000 Series 700/800, and IBM RISC System/6000 workstations
- Additional design entry and simulation support provided by EDIF 2 0 0 and 3 0 0 netlist files, library of parameterized modules (LPM), Verilog HDL, VHDL, and other interfaces to popular EDA tools from manufacturers such as Cadence, Exemplar Logic, Mentor Graphics, OrCAD, Synopsys, Synplicity, and VeriBest
- Programming support with Altera's Master Programming Unit (MPU), BitBlaster™ serial download cable, ByteBlaster™ parallel port download cable, and ByteBlasterMV™ parallel port download cable, as well as programming hardware from third-party manufacturers
- Offered in a variety of package options with 84 to 356 pins (see Table 2)

Table 2. MAX 9000 Package Options & I/O Counts *Note (1)*

Device	84-Pin PLCC	208-Pin RQFP	240-Pin RQFP	280-Pin PGA	304-Pin RQFP	356-Pin BGA
EPM9320	60 *(2)*	132	–	168	–	168
EPM9320A	60 *(2)*	132	–	–	–	168
EPM9400	59 *(2)*	139	159	–	–	–
EPM9480	–	146	175	–	–	–
EPM9560	–	153	191	216	216	216
EPM9560A	–	153	191	–	–	216

Notes:

(1) MAX 9000 device package types include plastic J-lead chip carrier (PLCC), power quad flat pack (RQFP), ceramic pin-grid array (PGA), and ball-grid array (BGA) packages.

(2) Perform a complete thermal analysis before committing a design to this device package. See *Application Note 74 (Evaluating Power for Altera Devices)*.

General Description

The MAX 9000 family of in-system-programmable, high-density, high-performance EPLDs is based on Altera's third-generation MAX architecture. Fabricated on an advanced CMOS technology, the EEPROM-based MAX 9000 family provides 6,000 to 12,000 usable gates, pin-to-pin delays as fast as 10 ns, and counter speeds of up to 144 MHz. The -10 speed grade of the MAX 9000 family is compliant with the ***PCI Local Bus Specification, Revision 2.2***. Table 3 shows the speed grades available for MAX 9000 devices.

Table 3. MAX 9000 Speed Grade Availability

Device	Speed Grade		
	-10	-15	-20
EPM9320		✓	✓
EPM9320A	✓		
EPM9400		✓	✓
EPM9480		✓	✓
EPM9560		✓	✓
EPM9560A	✓		

Table 4 shows the performance of MAX 9000 devices for typical functions.

Table 4. MAX 9000 Performance *Note (1)*

Application	Macrocells Used	Speed Grade			Units
		-10	-15	-20	
16-bit loadable counter	16	144	118	100	MHz
16-bit up/down counter	16	144	118	100	MHz
16-bit prescaled counter	16	144	118	100	MHz
16-bit address decode	1	5.6 (10)	7.9 (15)	10 (20)	ns
16-to-1 multiplexer	1	7.7 (12.1)	10.9 (18)	16 (26)	ns

Note:

(1) Internal logic array block (LAB) performance is shown. Numbers in parentheses show external delays from row input pin to row I/O pin.

The MAX 9000 architecture supports high-density integration of system-level logic functions. It easily integrates multiple programmable logic devices ranging from PALs, GALs, and 22V10s to field-programmable gate array (FPGA) devices and EPLDs.

All MAX 9000 device packages provide four dedicated inputs for global control signals with large fan-outs. Each I/O pin has an associated I/O cell register with a clock enable control on the periphery of the device. As outputs, these registers provide fast clock-to-output times; as inputs, they offer quick setup times.

MAX 9000 EPLDs provide 5.0-V in-system programmability (ISP). This feature allows the devices to be programmed and reprogrammed on the printed circuit board (PCB) for quick and efficient iterations during design development and debug cycles. MAX 9000 devices are guaranteed for 100 program and erase cycles.

MAX 9000 EPLDs contain 320 to 560 macrocells that are combined into groups of 16 macrocells, called logic array blocks (LABs). Each macrocell has a programmable-AND/fixed-OR array and a configurable register with independently programmable clock, clock enable, clear, and preset functions. For increased flexibility, each macrocell offers a dual-output structure that allows the register and the product terms to be used independently. This feature allows register-rich and combinatorial-intensive designs to be implemented efficiently. The dual-output structure of the MAX 9000 macrocell also improves logic utilization, thus increasing the effective capacity of the devices. To build complex logic functions, each macrocell can be supplemented with both shareable expander product terms and high-speed parallel expander product terms to provide up to 32 product terms per macrocell.

The MAX 9000 family provides programmable speed/power optimization. Speed-critical portions of a design can run at high speed/full power, while the remaining portions run at reduced speed/low power. This speed/power optimization feature enables the user to configure one or more macrocells to operate at 50% or less power while adding only a nominal timing delay. MAX 9000 devices also provide an option that reduces the slew rate of the output buffers, minimizing noise transients when non-speed-critical signals are switching. MAX 9000 devices offer the MultiVolt feature, which allows output drivers to be set for either 3.3-V or 5.0-V operation in mixed-voltage systems.

The MAX 9000 family is supported by Altera's MAX+PLUS II development system, a single, integrated software package that offers schematic, text—including VHDL, Verilog HDL, and the Altera Hardware Description Language (AHDL)—and waveform design entry, compilation and logic synthesis, simulation and timing analysis, and device programming. The MAX+PLUS II software provides EDIF 2 0 0 and 3 0 0, LPM, and other interfaces for additional design entry and simulation support from other industry-standard PC- and UNIX-workstation-based EDA tools. The MAX+PLUS II software runs on Windows-based PCs as well as Sun SPARCstation, HP 9000 Series 700 / 800, and IBM RISC System / 6000 workstations.

For more information on development tools, see the *MAX+PLUS II Programmable Logic Development System & Software Data Sheet*.

Functional Description

MAX 9000 devices use a third-generation MAX architecture that yields both high performance and a high degree of utilization for most applications. The MAX 9000 architecture includes the following elements:

- Logic array blocks
- Macrocells
- Expander product terms (shareable and parallel)
- FastTrack Interconnect
- Dedicated inputs
- I / O cells

Figure 1 shows a block diagram of the MAX 9000 architecture.

Figure 1. MAX 9000 Device Block Diagram

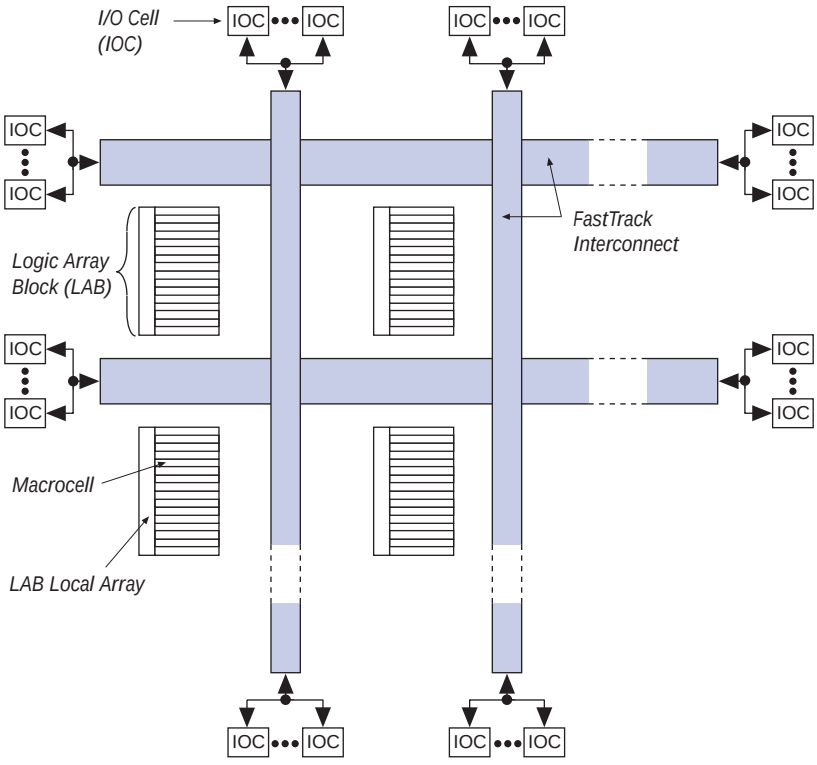

Logic Array Blocks

The MAX 9000 architecture is based on linking high-performance, flexible logic array modules called logic array blocks (LABs). LABs consist of 16-macrocell arrays that are fed by the LAB local array, as shown in Figure 2 on page 7. Multiple LABs are linked together via the FastTrack Interconnect, a series of fast, continuous channels that run the entire length and width of the device. The I/O pins are supported by I/O cells (IOCs) located at the end of each row (horizontal) and column (vertical) path of the FastTrack Interconnect.

Each LAB is fed by 33 inputs from the row interconnect and 16 feedback signals from the macrocells within the LAB. All of these signals are available within the LAB in their true and inverted form. In addition, 16 shared expander product terms (“expanders”) are available in their inverted form, for a total of 114 signals that feed each product term in the LAB. Each LAB is also fed by two low-skew global clocks and one global clear that can be used for register control signals in all 16 macrocells.

LABs drive the row and column interconnect directly. Each macrocell can drive out of the LAB onto one or both routing resources. Once on the row or column interconnect, signals can traverse to other LABs or to the IOCs.

Figure 2. MAX 9000 Logic Array Block

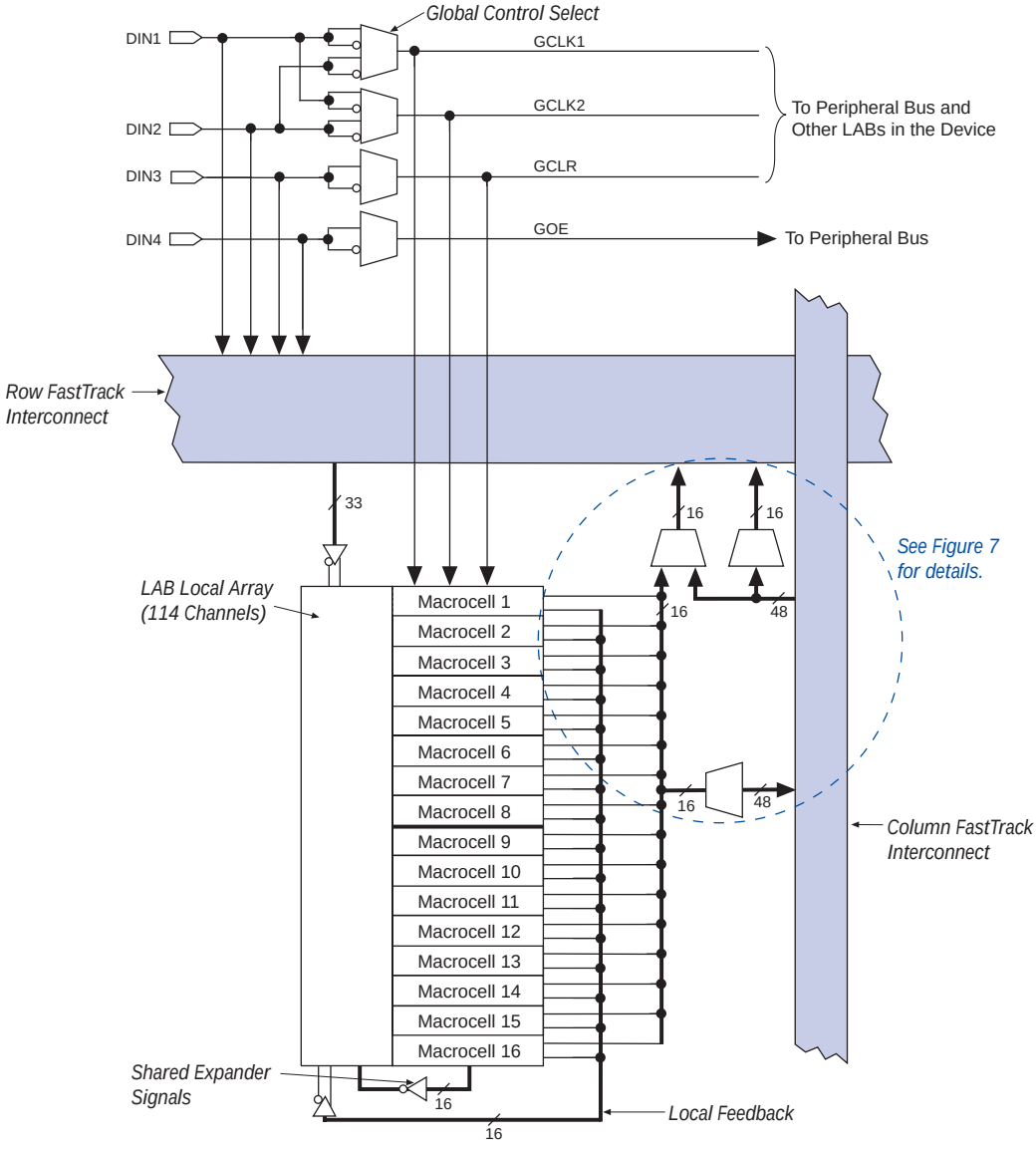

Macrocells

The MAX 9000 macrocell consists of three functional blocks: the product terms, the product-term select matrix, and the programmable register. The macrocell can be individually configured for both sequential and combinatorial logic operation. See Figure 3.

Figure 3. MAX 9000 Macrocell & Local Array

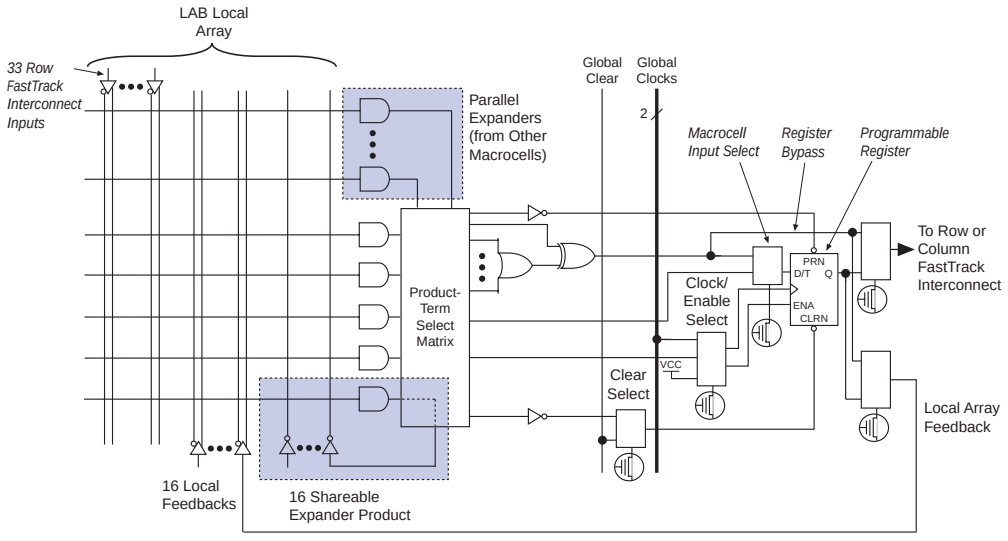

Combinatorial logic is implemented in the local array, which provides five product terms per macrocell. The product-term select matrix allocates these product terms for use as either primary logic inputs (to the OR and XOR gates) to implement combinatorial functions, or as secondary inputs to the macrocell's register clear, preset, clock, and clock enable control functions. Two kinds of expander product terms ("expanders") are available to supplement macrocell logic resources:

- Shareable expanders, which are inverted product terms that are fed back into the logic array
- Parallel expanders, which are product terms borrowed from adjacent macrocells

The MAX+PLUS II software automatically optimizes product-term allocation according to the logic requirements of the design.

For registered functions, each macrocell register can be individually programmed for D, T, JK, or SR operation with programmable clock control. The flipflop can also be bypassed for combinatorial operation. During design entry, the user specifies the desired register type; the MAX+PLUS II software then selects the most efficient register operation for each registered function to optimize resource utilization.

Each programmable register can be clocked in three different modes:

- By either global clock signal. This mode achieves the fastest clock-to-output performance.
- By a global clock signal and enabled by an active-high clock enable. This mode provides an enable on each flipflop while still achieving the fast clock-to-output performance of the global clock.
- By an array clock implemented with a product term. In this mode, the flipflop can be clocked by signals from buried macrocells or I/O pins.

Two global clock signals are available. As shown in Figure 2, these global clock signals can be the true or the complement of either of the global clock pins (`DIN1` and `DIN2`).

Each register also supports asynchronous preset and clear functions. As shown in Figure 3, the product-term select matrix allocates product terms to control these operations. Although the product-term-driven preset and clear inputs to registers are active high, active-low control can be obtained by inverting the signal within the logic array. In addition, each register clear function can be individually driven by the dedicated global clear pin (`DIN3`). The global clear can be programmed for active-high or active-low operation.

All MAX 9000 macrocells offer a dual-output structure that provides independent register and combinatorial logic output within the same macrocell. This function is implemented by a process called register packing. When register packing is used, the product-term select matrix allocates one product term to the D input of the register, while the remaining product terms can be used to implement unrelated combinatorial logic. Both the registered and the combinatorial output of the macrocell can feed either the FastTrack Interconnect or the LAB local array.

Expander Product Terms

Although most logic functions can be implemented with the five product terms available in each macrocell, some logic functions are more complex and require additional product terms. Although another macrocell can supply the required logic resources, the MAX 9000 architecture also offers both shareable and parallel expander product terms that provide additional product terms directly to any macrocell in the same LAB. These expanders help ensure that logic is synthesized with the fewest possible logic resources to obtain the fastest possible speed.

Shareable Expanders

Each LAB has 16 shareable expanders that can be viewed as a pool of uncommitted single product terms (one from each macrocell) with inverted outputs that feed back into the LAB local array. Each shareable expander can be used and shared by any or all macrocells in the LAB to build complex logic functions. A small delay (t_{LOCAL} + t_{SEXP}) is incurred when shareable expanders are used. Figure 4 shows how shareable expanders can feed multiple macrocells.

Figure 4. MAX 9000 Shareable Expanders

Shareable expanders can be shared by any or all macrocells in the LAB.

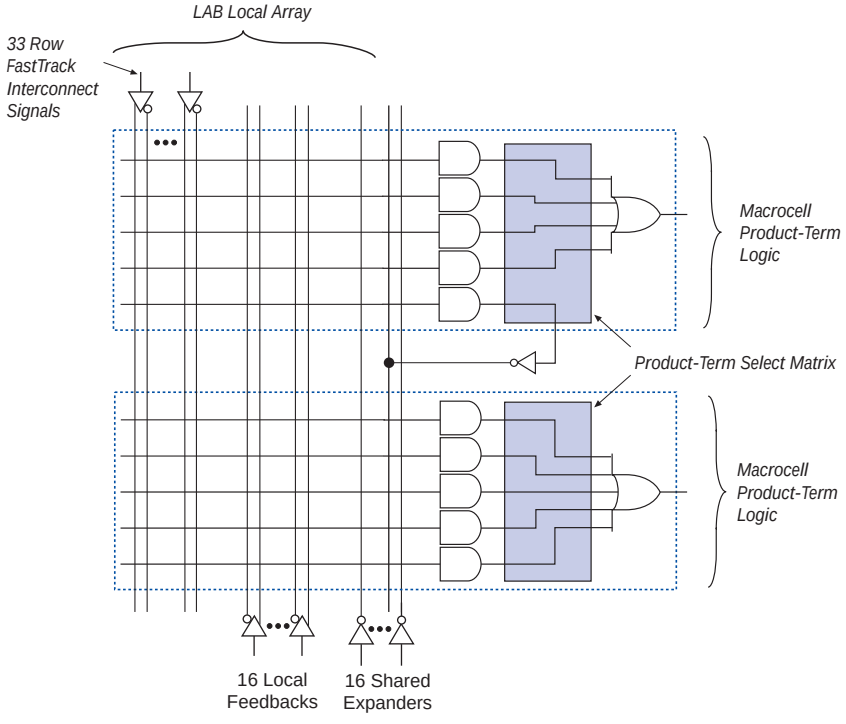

Parallel Expanders

Parallel expanders are unused product terms that can be allocated to a neighboring macrocell to implement fast, complex logic functions. Parallel expanders allow up to 20 product terms to directly feed the macrocell OR logic, with five product terms provided by the macrocell and 15 parallel expanders provided by neighboring macrocells in the LAB. Figure 5 shows how parallel expanders can feed the neighboring macrocell.

Figure 5. MAX 9000 Parallel Expanders

Unused product terms in a macrocell can be allocated to a neighboring macrocell.

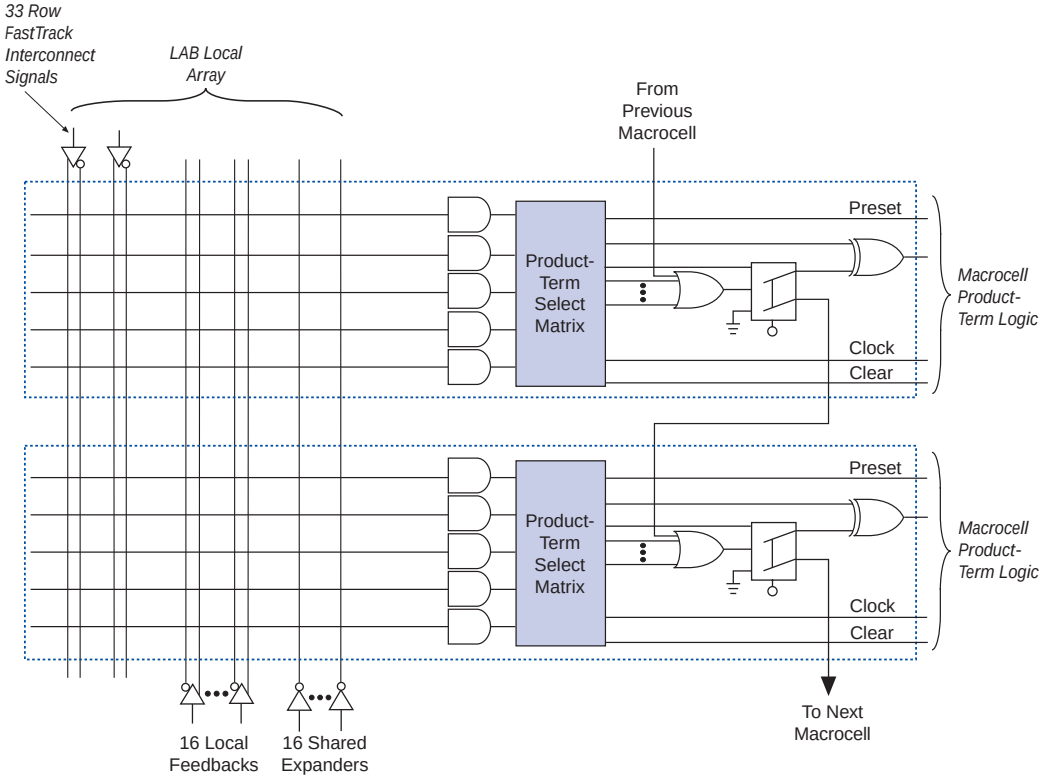

The MAX+PLUS II Compiler automatically allocates as many as three sets of up to five parallel expanders to macrocells that require additional product terms. Each set of expanders incurs a small, incremental timing delay (t_{PEXP}). For example, if a macrocell requires 14 product terms, the Compiler uses the five dedicated product terms within the macrocell and allocates two sets of parallel expanders; the first set includes five product terms and the second set includes four product terms, increasing the total delay by $2 \times t_{PEXP}$.

Two groups of eight macrocells within each LAB (e.g., macrocells 1 through 8 and 9 through 16) form two chains to lend or borrow parallel expanders. A macrocell borrows parallel expanders from lower-numbered macrocells. For example, macrocell 8 can borrow parallel expanders from macrocell 7, from macrocells 7 and 6, or from macrocells 7, 6, and 5. Within each group of 8, the lowest-numbered macrocell can only lend parallel expanders and the highest-numbered macrocell can only borrow them.

FastTrack Interconnect

In the MAX 9000 architecture, connections between macrocells and device I/O pins are provided by the FastTrack Interconnect, a series of continuous horizontal and vertical routing channels that traverse the entire device. This device-wide routing structure provides predictable performance even in complex designs. In contrast, the segmented routing in FPGAs requires switch matrices to connect a variable number of routing paths, increasing the delays between logic resources and reducing performance. Figure 6 shows the interconnection of four adjacent LABs with row and column interconnects.

Figure 6. MAX 9000 Device Interconnect Resources

Each LAB is named on the basis of its physical row (A, B, C, etc.) and column (1, 2, 3, etc.) position within the device.

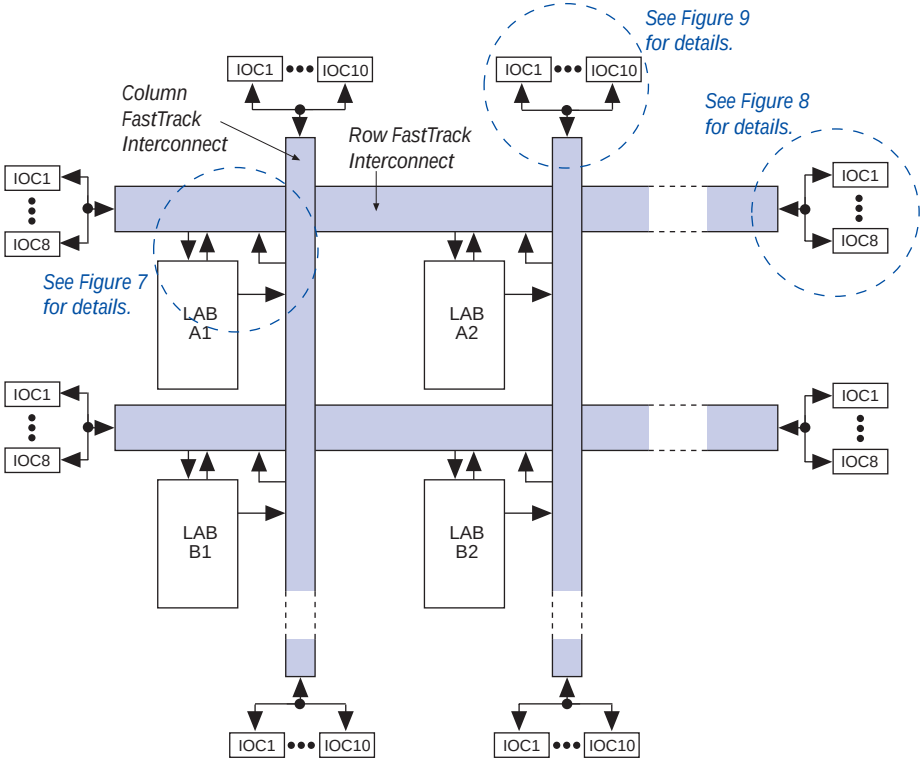

The LABs within MAX 9000 devices are arranged into a matrix of columns and rows. Table 5 shows the number of columns and rows in each MAX 9000 device.

Table 5. MAX 9000 Rows & Columns

Devices	Rows	Columns
EPM9320, EPM9320A	4	5
EPM9400	5	5
EPM9480	6	5
EPM9560, EPM9560A	7	5

Each row of LABs has a dedicated row interconnect that routes signals both into and out of the LABs in the row. The row interconnect can then drive I/O pins or feed other LABs in the device. Each row interconnect has a total of 96 channels. Figure 7 shows how a macrocell drives the row and column interconnect.

Figure 7. MAX 9000 LAB Connections to Row & Column Interconnect

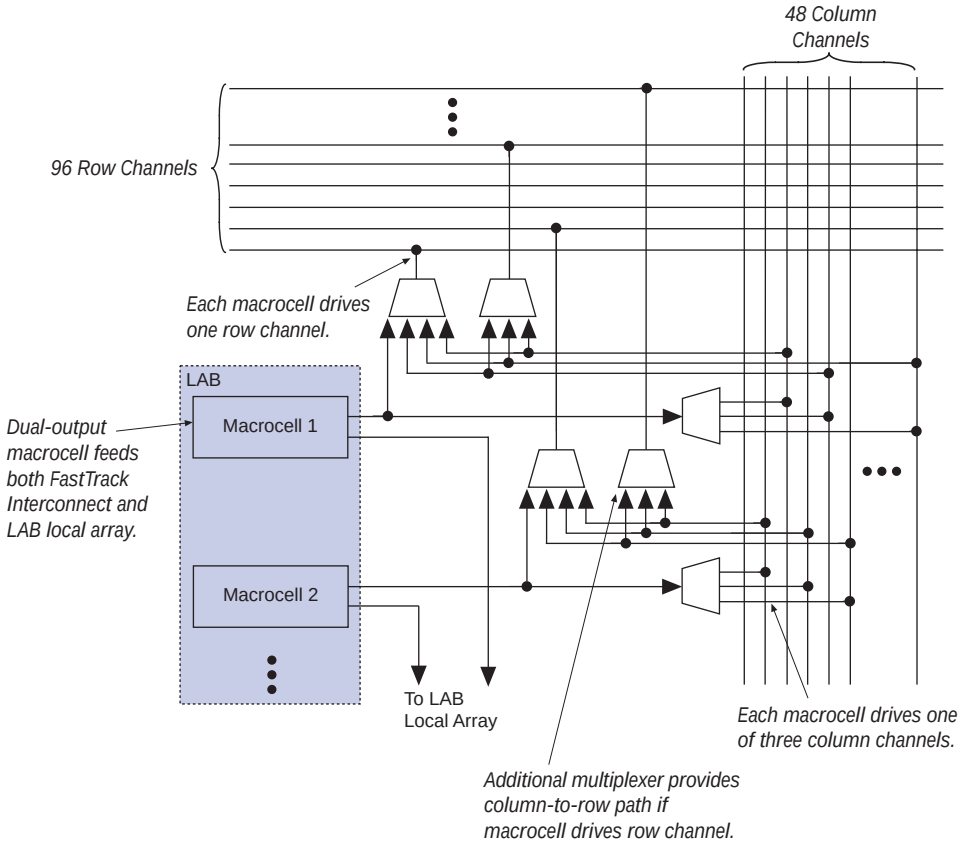

Each macrocell in the LAB can drive one of three separate column interconnect channels. The column channels run vertically across the entire device, and are shared by the macrocells in the same column. The MAX+PLUS II Compiler optimizes connections to a column channel automatically.

A row interconnect channel can be fed by the output of the macrocell through a 4-to-1 multiplexer that the macrocell shares with three column channels. If the multiplexer is used for a macrocell-to-row connection, the three column signals can access another row channel via an additional 3-to-1 multiplexer. Within any LAB, the multiplexers provide all 48 column channels with access to 32 row channels.

Row-to-I/O Cell Connections

Figure 8 illustrates the connections between row interconnect channels and IOCs. An input signal from an IOC can drive two separate row channels. When an IOC is used as an output, the signal is driven by a 10-to-1 multiplexer that selects the row channels. Each end of the row channel feeds up to eight IOCs on the periphery of the device.

Figure 8. MAX 9000 Row-to-IOC Connections

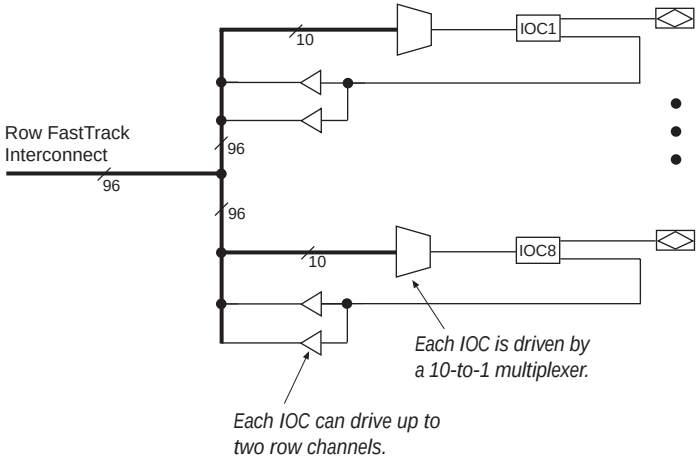

Column-to-I/O Cell Connections

Each end of a column channel has up to 10 IOCs (see Figure 9). An input signal from an IOC can drive two separate column channels. When an IOC is used as an output, the signal is driven by a 17-to-1 multiplexer that selects the column channels.

Figure 9. MAX 9000 Column-to-IOC Connections

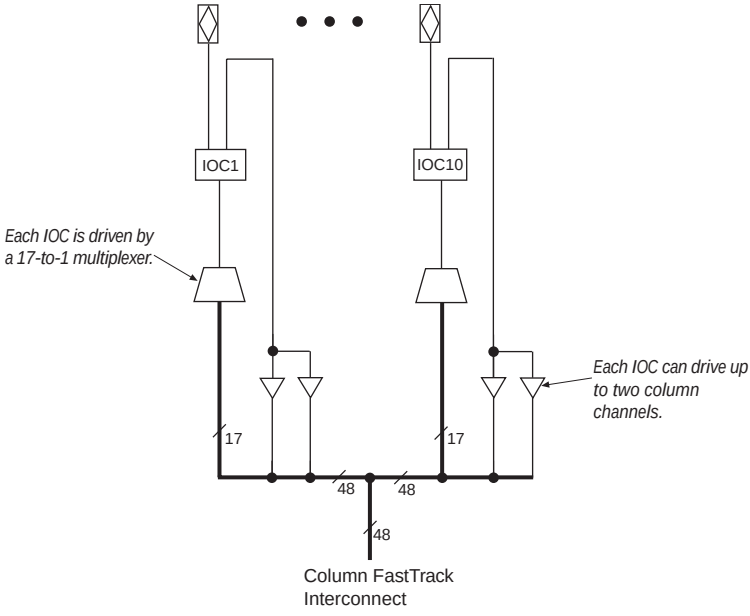

Dedicated Inputs

In addition to the general-purpose I/O pins, MAX 9000 devices have four dedicated input pins. These dedicated inputs provide low-skew, device-wide signal distribution to the LABs and IOCs in the device, and are typically used for global clock, clear, and output enable control signals. The global control signals can feed the macrocell or IOC clock and clear inputs, as well as the IOC output enable. The dedicated inputs can also be used as general-purpose data inputs because they can feed the row FastTrack Interconnect (see Figure 2 on page 7).

I/O Cells

Figure 10 shows the IOC block diagram. Signals enter the MAX 9000 device from either the I/O pins that provide general-purpose input capability or from the four dedicated inputs. The IOCs are located at the ends of the row and column interconnect channels.

Figure 10. MAX 9000 IOC

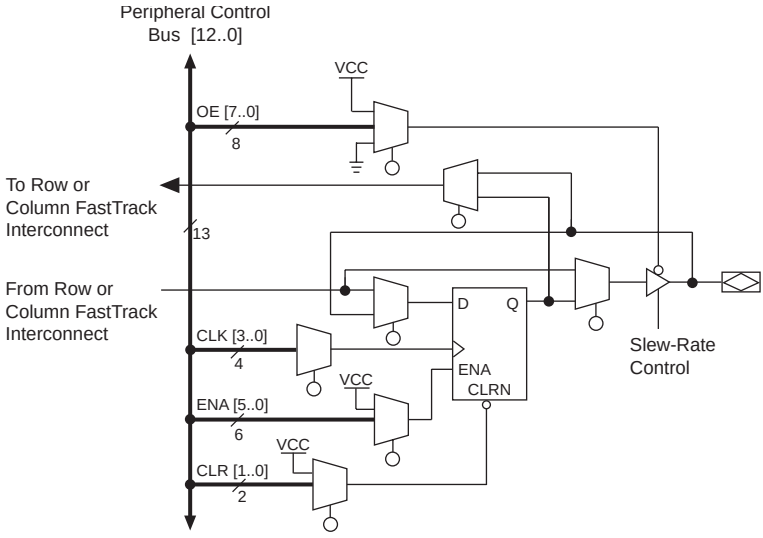

I/O pins can be used as input, output, or bidirectional pins. Each IOC has an IOC register with a clock enable input. This register can be used either as an input register for external data that requires fast setup times, or as an output register for data that requires fast clock-to-output performance. The IOC register clock enable allows the global clock to be used for fast clock-to-output performance, while maintaining the flexibility required for selective clocking.

The clock, clock enable, clear, and output enable controls for the IOCs are provided by a network of I/O control signals. These signals can be supplied by either the dedicated input pins or internal logic. The IOC control-signal paths are designed to minimize the skew across the device. All control-signal sources are buffered onto high-speed drivers that drive the signals around the periphery of the device. This "peripheral bus" can be configured to provide up to eight output enable signals, up to four clock signals, up to six clock enable signals, and up to two clear signals. Table 6 on page 18 shows the sources that drive the peripheral bus and how the IOC control signals share the peripheral bus.

The output buffer in each IOC has an adjustable output slew rate that can be configured for low-noise or high-speed performance. A slower slew rate reduces board-level noise and adds a nominal timing delay to the output buffer delay (t_{OD}) parameter. The fast slew rate should be used for speed-critical outputs in systems that are adequately protected against noise. Designers can specify the slew rate on a pin-by-pin basis during design entry or assign a default slew rate to all pins on a global basis. The slew rate control affects both rising and falling edges of the output signals.

Table 6. Peripheral Bus Sources

Peripheral Control Signal	Source			
	EPM9320 EPM9320A	EPM9400	EPM9480	EPM9560 EPM9560A
OE0/ENA0	Row C	Row E	Row F	Row G
OE1/ENA1	Row B	Row E	Row F	Row F
OE2/ENA2	Row A	Row E	Row E	Row E
OE3/ENA3	Row B	Row B	Row B	Row B
OE4/ENA4	Row A	Row A	Row A	Row A
OE5	Row D	Row D	Row D	Row D
OE6	Row C	Row C	Row C	Row C
OE7/CLR1	Row B/GOE	Row B/GOE	Row B/GOE	Row B/GOE
CLR0/ENA5	Row A/GCLR	Row A/GCLR	Row A/GCLR	Row A/GCLR
CLK0	GCLK1	GCLK1	GCLK1	GCLK1
CLK1	GCLK2	GCLK2	GCLK2	GCLK2
CLK2	Row D	Row D	Row D	Row D
CLK3	Row C	Row C	Row C	Row C

Output Configuration

The MAX 9000 device architecture supports the MultiVolt I/O interface feature, which allows MAX 9000 devices to interface with systems of differing supply voltages. The 5.0-V devices in all packages can be set for 3.3-V or 5.0-V I/O pin operation. These devices have one set of V_{CC} pins for internal operation and input buffers (VCCINT), and another set for I/O output drivers (VCCIO).

The VCCINT pins must always be connected to a 5.0-V power supply. With a 5.0-V V_{CCINT} level, input voltages are at TTL levels and are therefore compatible with 3.3-V and 5.0-V inputs.

The VCCIO pins can be connected to either a 3.3-V or 5.0-V power supply, depending on the output requirements. When the VCCIO pins are connected to a 5.0-V power supply, the output levels are compatible with 5.0-V systems. When the VCCIO pins are connected to a 3.3-V power supply, the output high is at 3.3 V and is therefore compatible with 3.3-V or 5.0-V systems. Devices operating with V_{CCIO} levels lower than 4.75 V incur a nominally greater timing delay of t_{OD2} instead of t_{OD1}.

In-System Programmability (ISP)

MAX 9000 devices can be programmed in-system through a 4-pin JTAG interface. ISP offers quick and efficient iterations during design development and debug cycles. The MAX 9000 architecture internally generates the 12.0-V programming voltage required to program EEPROM cells, eliminating the need for an external 12.0-V power supply to program the devices on the board. During ISP, the I/O pins are tri-stated to eliminate board conflicts.

ISP simplifies the manufacturing flow by allowing the devices to be mounted on a printed circuit board with standard pick-and-place equipment before they are programmed. MAX 9000 devices can be programmed by downloading the information via in-circuit testers, embedded processors, or the Altera BitBlaster, ByteBlaster, or ByteBlasterMV download cable. (The ByteBlaster cable is obsolete and has been replaced by the ByteBlasterMV cable, which can interface with 2.5-V, 3.3-V, and 5.0-V devices.) Programming the devices after they are placed on the board eliminates lead damage on high pin-count packages (e.g., QFP packages) due to device handling. MAX 9000 devices can also be reprogrammed in the field (i.e., product upgrades can be performed in the field via software or modem).

In-system programming can be accomplished with either an adaptive or constant algorithm. An adaptive algorithm reads information from the unit and adapts subsequent programming steps to achieve the fastest possible programming time for that unit. Because some in-circuit testers platforms have difficulties supporting an adaptive algorithm, Altera offers devices tested with a constant algorithm. Devices tested to the constant algorithm have an “F” suffix in the ordering code.

Programming Sequence

During in-system programming, instructions, addresses, and data are shifted into the MAX 9000 device through the TDI input pin. Data is shifted out through the TDO output pin and compared against the expected data.

Programming a pattern into the device requires the following six ISP stages. A stand-alone verification of a programmed pattern involves only stages 1, 2, 5, and 6.

1. *Enter ISP*. The enter ISP stage ensures that the I/O pins transition smoothly from user mode to ISP mode. The enter ISP stage requires 1 ms.

2. *Check ID*. Before any program or verify process, the silicon ID is checked. The time required to read this silicon ID is relatively small compared to the overall programming time.

3. *Bulk Erase*. Erasing the device in-system involves shifting in the instructions to erase the device and applying one erase pulse of 100 ms.

4. *Program*. Programming the device in-system involves shifting in the address and data and then applying the programming pulse to program the EEPROM cells. This process is repeated for each EEPROM address.

5. *Verify*. Verifying an Altera device in-system involves shifting in addresses, applying the read pulse to verify the EEPROM cells, and shifting out the data for comparison. This process is repeated for each EEPROM address.

6. *Exit ISP*. An exit ISP stage ensures that the I/O pins transition smoothly from ISP mode to user mode. The exit ISP stage requires 1 ms.

Programming Times

The time required to implement each of the six programming stages can be broken into the following two elements:

- A pulse time to erase, program, or read the EEPROM cells.
- A shifting time based on the test clock (TCK) frequency and the number of TCK cycles to shift instructions, address, and data into the device.

By combining the pulse and shift times for each of the programming stages, the program or verify time can be derived as a function of the TCK frequency, the number of devices, and specific target device(s). Because different ISP-capable devices have a different number of EEPROM cells, both the total fixed and total variable times are unique for a single device.

Programming a Single MAX 9000 Device

The time required to program a single MAX 9000 device in-system can be calculated from the following formula:

$$t_{PROG} = t_{PPULSE} + \frac{Cycle_{PTCK}}{f_{TCK}}$$

where: t_{PROG} = Programming time
t_{PPULSE} = Sum of the fixed times to erase, program, and verify the EEPROM cells
$Cycle_{PTCK}$ = Number of TCK cycles to program a device
f_{TCK} = TCK frequency

The ISP times for a stand-alone verification of a single MAX 9000 device can be calculated from the following formula:

$$t_{VER} = t_{VPULSE} + \frac{Cycle_{VTCK}}{f_{TCK}}$$

where: t_{VER} = Verify time
t_{VPULSE} = Sum of the fixed times to verify the EEPROM cells
$Cycle_{VTCK}$ = Number of TCK cycles to verify a device

The programming times described in Tables 7 through 9 are associated with the worst-case method using the ISP algorithm.

Table 7. MAX 9000 t_{PULSE} & $Cycle_{TCK}$ Values

Device	Programming		Stand-Alone Verification	
	t_{PPULSE} (s)	$Cycle_{PTCK}$	t_{VPULSE} (s)	$Cycle_{VTCK}$
EPM9320 EPM9320A	11.79	2,966,000	0.15	1,806,000
EPM9400	12.00	3,365,000	0.15	2,090,000
EPM9480	12.21	3,764,000	0.15	2,374,000
EPM9560 EPM9560A	12.42	4,164,000	0.15	2,658,000

Tables 8 and 9 show the in-system programming and stand alone verification times for several common test clock frequencies.

Table 8. MAX 9000 In-System Programming Times for Different Test Clock Frequencies

Device	f_{TCK}								Units
	10 MHz	5 MHz	2 MHz	1 MHz	500 kHz	200 kHz	100 kHz	50 kHz	
EPM9320 EPM9320A	12.09	12.38	13.27	14.76	17.72	26.62	41.45	71.11	s
EPM9400	12.34	12.67	13.68	15.37	18.73	28.83	45.65	79.30	s
EPM9480	12.59	12.96	14.09	15.98	19.74	31.03	49.85	87.49	s
EPM9560 EPM9560A	12.84	13.26	14.50	16.59	20.75	33.24	54.06	95.70	s

Table 9. MAX 9000 Stand-Alone Verification Times for Different Test Clock Frequencies

Device	f_{TCK}								Units
	10 MHz	5 MHz	2 MHz	1 MHz	500 kHz	200 kHz	100 kHz	50 kHz	
EPM9320 EPM9320A	0.33	0.52	1.06	1.96	3.77	9.18	18.21	36.27	s
EPM9400	0.36	0.57	1.20	2.24	4.33	10.60	21.05	41.95	s
EPM9480	0.39	0.63	1.34	2.53	4.90	12.02	23.89	47.63	s
EPM9560 EPM9560A	0.42	0.69	1.48	2.81	5.47	13.44	26.73	53.31	s

Programming with External Hardware

MAX 9000 devices can be programmed on Windows-based PCs with an Altera Logic Programmer card, the Master Programming Unit (MPU), and the appropriate device adapter. The MPU performs continuity checking to ensure adequate electrical contact between the adapter and the device.

For more information, see the *Altera Programming Hardware Data Sheet*.

The MAX+PLUS II software can use text- or waveform-format test vectors created with the MAX+PLUS II Text Editor or Waveform Editor to test a programmed device. For added design verification, designers can perform functional testing to compare the functional behavior of a MAX 9000 device with the results of simulation.

Data I/O, BP Microsystems, and other programming hardware manufacturers also provide programming support for Altera devices.

For more information, see *Programming Hardware Manufacturers.*

IEEE Std. 1149.1 (JTAG) Boundary-Scan Support

MAX 9000 devices support JTAG BST circuitry as specified by IEEE Std. 1149.1-1990. Table 10 describes the JTAG instructions supported by the MAX 9000 family. The pin-out tables starting on page 38 show the location of the JTAG control pins for each device. If the JTAG interface is not required, the JTAG pins are available as user I/O pins.

Table 10. MAX 9000 JTAG Instructions

JTAG Instruction	Description
SAMPLE/PRELOAD	Allows a snapshot of signals at the device pins to be captured and examined during normal device operation, and permits an initial data pattern output at the device pins.
EXTEST	Allows the external circuitry and board-level interconnections to be tested by forcing a test pattern at the output pins and capturing test results at the input pins.
BYPASS	Places the 1-bit bypass register between the `TDI` and `TDO` pins, which allows the BST data to pass synchronously through a selected device to adjacent devices during normal device operation.
IDCODE	Selects the IDCODE register and places it between `TDI` and `TDO`, allowing the IDCODE to be shifted out of `TDO`. Supported by the EPM9320A, EPM9400, EPM9480, and EPM9560A devices only.
UESCODE	Selects the user electronic signature (UESCODE) register and allows the UESCODE to be shifted out of `TDO` serially. This instruction is supported by MAX 9000A devices only.
ISP Instructions	These instructions are used when programming MAX 9000 devices via the JTAG ports with the BitBlaster or ByteBlasterMV download cable, or using a Jam File (**.jam**), Jam Byte-Code File (**.jbc**), or Serial Vector Format (**.svf**) File via an embedded processor or test equipment.

The instruction register length for MAX 9000 devices is 10 bits. EPM9320A and EPM9560A devices support a 16-bit UESCODE register. Tables 11 and 12 show the boundary-scan register length and device IDCODE information for MAX 9000 devices.

Table 11. MAX 9000 Boundary-Scan Register Length

Device	Boundary-Scan Register Length
EPM9320, EPM9320A	504
EPM9400	552
EPM9480	600
EPM9560, EPM9560A	648

Table 12. 32-Bit MAX 9000 Device IDCODE *Note (1)*

Device	IDCODE (32 Bits)			
	Version (4 Bits)	Part Number (16 Bits) *(2)*	Manufacturer's Identity (11 Bits)	1 (1 Bit)
EPM9320A *(3)*	0000	1001 0011 0010 0000	00001101110	1
EPM9400	0000	1001 0100 0000 0000	00001101110	1
EPM9480	0000	1001 0100 1000 0000	00001101110	1
EPM9560A *(3)*	0000	1001 0101 0110 0000	00001101110	1

Notes:

(1) The IDCODE's least significant bit (LSB) is always 1.

(2) The most significant bit (MSB) is on the left.

(3) Although the EPM9320A and EPM9560A devices support the IDCODE instruction, the EPM9320 and EPM9560 devices do not.

Figure 11 shows the timing requirements for the JTAG signals.

Figure 11. MAX 9000 JTAG Waveforms

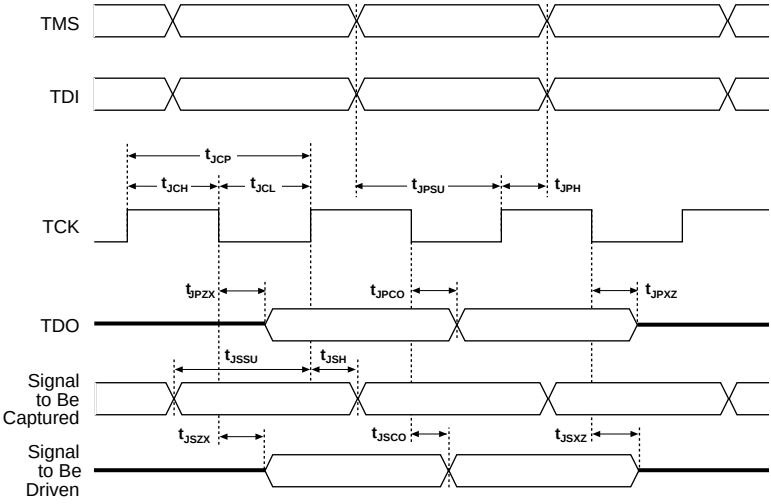

Table 13 shows the JTAG timing parameters and values for MAX 9000 devices.

Table 13. JTAG Timing Parameters & Values for MAX 9000 Devices

Symbol	Parameter	Min	Max	Unit
t_{JCP}	TCK clock period	100		ns
t_{JCH}	TCK clock high time	50		ns
t_{JCL}	TCK clock low time	50		ns
t_{JPSU}	JTAG port setup time	20		ns
t_{JPH}	JTAG port hold time	45		ns
t_{JPCO}	JTAG port clock to output		25	ns
t_{JPZX}	JTAG port high impedance to valid output		25	ns
t_{JPXZ}	JTAG port valid output to high impedance		25	ns
t_{JSSU}	Capture register setup time	20		ns
t_{JSH}	Capture register hold time	45		ns
t_{JSCO}	Update register clock to output		25	ns
t_{JSZX}	Update register high impedance to valid output		25	ns
t_{JSXZ}	Update register valid output to high impedance		25	ns

For detailed information on JTAG operation in MAX 9000 devices, refer to *Application Note 39 (IEEE 1149.1 (JTAG) Boundary-Scan Testing in Altera Devices)*.

Programmable Speed/Power Control

MAX 9000 devices offer a power-saving mode that supports low-power operation across user-defined signal paths or the entire device. Because most logic applications require only a small fraction of all gates to operate at maximum frequency, this feature allows total power dissipation to be reduced by 50% or more.

The designer can program each individual macrocell in a MAX 9000 device for either high-speed (i.e., with the Turbo Bit™ option turned on) or low-power (i.e., with the Turbo Bit option turned off) operation. As a result, speed-critical paths in the design can run at high speed, while remaining paths operate at reduced power. Macrocells that run at low power incur a nominal timing delay adder (t_{LPA}) for the LAB local array delay (t_{LOCAL}).

Design Security

All MAX 9000 EPLDs contain a programmable security bit that controls access to the data programmed into the device. When this bit is programmed, a proprietary design implemented in the device cannot be copied or retrieved. This feature provides a high level of design security, because programmed data within EEPROM cells is invisible. The security bit that controls this function, as well as all other programmed data, is reset only when the device is erased.

Generic Testing

MAX 9000 EPLDs are fully functionally tested. Complete testing of each programmable EEPROM bit and all logic functionality ensures 100% programming yield. AC test measurements are taken under conditions equivalent to those shown in Figure 12. Test patterns can be used and then erased during the early stages of the production flow.

Figure 12. MAX 9000 AC Test Conditions

Power supply transients can affect AC measurements. Simultaneous transitions of multiple outputs should be avoided for accurate measurement. Threshold tests must not be performed under AC conditions. Large-amplitude, fast ground-current transients normally occur as the device outputs discharge the load capacitances. When these transients flow through the parasitic inductance between the device ground pin and the test system ground, significant reductions in observable noise immunity can result. Numbers in parentheses are for 3.3-V outputs. Numbers without parentheses are for 5.0-V devices or outputs.

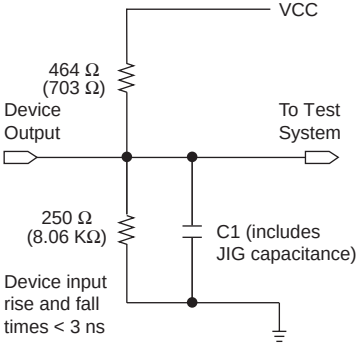

Operating Conditions

Tables 14 through 20 provide information on absolute maximum ratings, recommended operating conditions, operating conditions, and capacitance for MAX 9000 devices.

Table 14. MAX 9000 Device Absolute Maximum Ratings *Note (1)*

Symbol	Parameter	Conditions	Min	Max	Unit
V_{CC}	Supply voltage	With respect to ground *(2)*	–2.0	7.0	V
V_I	DC input voltage		–2.0	7.0	V
V_{CCISP}	Supply voltage during in-system programming		–2.0	7.0	V
I_{OUT}	DC output current, per pin		–25	25	mA
T_{STG}	Storage temperature	No bias	–65	150	° C
T_{AMB}	Ambient temperature	Under bias	–65	135	° C
T_J	Junction temperature	Ceramic packages, under bias		150	° C
		PQFP and RQFP packages, under bias		135	° C

Table 15. MAX 9000 Device Recommended Operating Conditions

Symbol	Parameter	Conditions	Min	Max	Unit
V_{CCINT}	Supply voltage for internal logic and input buffers	*(3)*, *(4)*	4.75 (4.50)	5.25 (5.50)	V
V_{CCIO}	Supply voltage for output drivers, 5.0-V operation	*(3)*, *(4)*	4.75 (4.50)	5.25 (5.50)	V
	Supply voltage for output drivers, 3.3-V operation	*(3)*, *(4)*	3.00 (3.00)	3.60 (3.60)	V
V_{CCISP}	Supply voltage during in-system programming		4.75	5.25	V
V_I	Input voltage		–0.5	V_{CCINT} + 0.5	V
V_O	Output voltage		0	V_{CCIO}	V
T_A	Ambient temperature	For commercial use	0	70	° C
		For industrial use	–40	85	° C
T_J	Junction temperature	For commercial use	0	90	° C
		For industrial use	–40	105	° C
t_R	Input rise time			40	ns
t_F	Input fall time			40	ns

Table 16. MAX 9000 Device DC Operating Conditions *Notes (5), (6)*

Symbol	Parameter	Conditions	Min	Max	Unit
V_{IH}	High-level input voltage	*(7)*	2.0	V_{CCINT} + 0.5	V
V_{IL}	Low-level input voltage		–0.5	0.8	V
V_{OH}	5.0-V high-level TTL output voltage	I_{OH} = –4 mA DC, V_{CCIO} = 4.75 V *(8)*	2.4		V
	3.3-V high-level TTL output voltage	I_{OH} = –4 mA DC, V_{CCIO} = 3.00 V *(8)*	2.4		V
	3.3-V high-level CMOS output voltage	I_{OH} = –0.1 mA DC, V_{CCIO} = 3.00 V *(8)*	V_{CCIO} – 0.2		V
V_{OL}	5.0-V low level TTL output voltage	I_{OL} = 12 mA DC, V_{CCIO} = 4.75 V *(8)*		0.45	V
	3.3-V low-level TTL output voltage	I_{OL} = 12 mA DC, V_{CCIO} = 3.00 V *(8)*		0.45	V
	3.3-V low-level CMOS output voltage	I_{OL} = 0.1 mA DC, V_{CCIO} = 3.00 V *(8)*		0.2	V
I_I	I/O pin leakage current of dedicated input pins	V_I = –0.5 to 5.5 V *(9)*	–10	10	µA
I_{OZ}	Tri-state output off-state current	V_I = –0.5 to 5.5 V	–40	40	µA

Table 17. MAX 9000 Device Capacitance: EPM9320, EPM9400, EPM9480 & EPM9560 Devices *Note (10)*

Symbol	Parameter	Conditions	Min	Max	Unit
C_{DIN1}	Dedicated input capacitance	V_{IN} = 0 V, f = 1.0 MHz		18	pF
C_{DIN2}	Dedicated input capacitance	V_{IN} = 0 V, f = 1.0 MHz		18	pF
C_{DIN3}	Dedicated input capacitance	V_{IN} = 0 V, f = 1.0 MHz		17	pF
C_{DIN4}	Dedicated input capacitance	V_{IN} = 0 V, f = 1.0 MHz		20	pF
$C_{I/O}$	I/O pin capacitance	V_{IN} = 0 V, f = 1.0 MHz		12	pF

Table 18. MAX 9000A Device Capacitance: EPM9320A & EPM9560A Devices *Note (10)*

Symbol	Parameter	Conditions	Min	Max	Unit
C_{DIN1}	Dedicated input capacitance	V_{IN} = 0 V, f = 1.0 MHz		16	pF
C_{DIN2}	Dedicated input capacitance	V_{IN} = 0 V, f = 1.0 MHz		10	pF
C_{DIN3}	Dedicated input capacitance	V_{IN} = 0 V, f = 1.0 MHz		10	pF
C_{DIN4}	Dedicated input capacitance	V_{IN} = 0 V, f = 1.0 MHz		12	pF
$C_{I/O}$	I/O pin capacitance	V_{IN} = 0 V, f = 1.0 MHz		8	pF

Table 19. MAX 9000 Device Typical I_{CC} Supply Current Values

Symbol	Parameter	Conditions	EPM9320	EPM9400	EPM9480	EPM9560	Unit
I_{CC1}	I_{CC} supply current (low-power mode, standby, typical)	V_I = ground, no load *(11)*	106	132	140	146	mA

Table 20. MAX 9000A Device Typical I_{CC} Supply Current Values

Symbol	Parameter	Conditions	EPM9320A	EPM9560A	Unit
I_{CC1}	I_{CC} supply current (low-power mode, standby, typical)	V_I = ground, no load *(11)*	99	174	mA

Notes to tables:

(1) See the *Operating Requirements for Altera Devices Data Sheet*.
(2) Minimum DC input on I/O pins is –0.5 V and on the four dedicated input pins is –0.3 V. During transitions, the inputs may undershoot to –2.0 V or overshoot to 7.0 V for periods shorter than 20 ns under no-load conditions.
(3) V_{CC} must rise monotonically.
(4) Numbers in parentheses are for industrial-temperature-range devices.
(5) Typical values are for T_A = 25° C and V_{CC} = 5.0 V.
(6) These values are specified under the MAX 9000 recommended operating conditions, shown in Table 15 on page 27.
(7) During in-system programming, the minimum V_{IH} of the JTAG TCK pin is 3.6 V. The minimum V_{IH} of this pin during JTAG testing remains at 2.0 V. To attain this 3.6-V V_{IH} during programming, the ByteBlaster and ByteBlasterMV download cables must have a 5.0-V V_{CC}.
(8) This parameter is measured with 50% of the outputs each sinking 12 mA. The I_{OH} parameter refers to high-level TTL or CMOS output current; the I_{OL} parameter refers to the low-level TTL or CMOS output current.
(9) JTAG pin input leakage is typically –60 µA.
(10) Capacitance is sample-tested only and is measured at 25° C.
(11) Measured with a 16-bit loadable, enabled, up/down counter programmed into each LAB. I_{CC} is measured at 0° C.

Figure 13 shows typical output drive characteristics for MAX 9000 devices with 5.0-V and 3.3-V V_{CCIO}.

Figure 13. Output Drive Characteristics of MAX 9000 Devices *Note (1)*

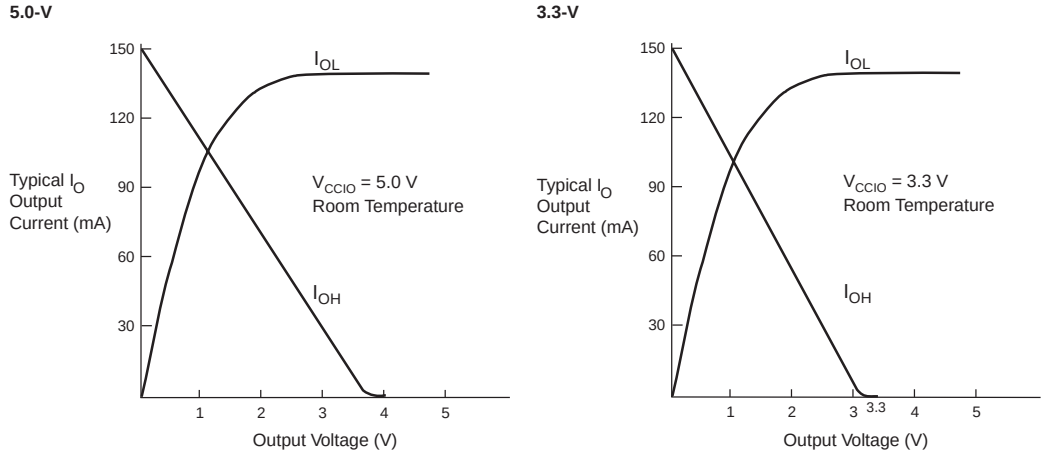

Note:

(1) Output drive characteristics include the JTAG TDO pin.

Timing Model

The continuous, high-performance FastTrack Interconnect ensures predictable performance and accurate simulation and timing analysis. This predictable performance contrasts with that of FPGAs, which use a segmented connection scheme and hence have unpredictable performance. Timing simulation and delay prediction are available with the MAX+PLUS II Simulator and Timing Analyzer, or with industry-standard EDA tools. The Simulator offers both pre-synthesis functional simulation to evaluate logic design accuracy and post-synthesis timing simulation with 0.1-ns resolution. The Timing Analyzer provides point-to-point timing delay information, setup and hold time prediction, and device-wide performance analysis.

The MAX 9000 timing model in Figure 14 shows the delays that correspond to various paths and functions in the circuit. This model contains three distinct parts: the macrocell, IOC, and interconnect, including the row and column FastTrack Interconnect and LAB local array paths. Each parameter shown in Figure 14 is expressed as a worst-case value in the internal timing characteristics tables in this data sheet. Hand-calculations that use the MAX 9000 timing model and these timing parameters can be used to estimate MAX 9000 device performance.

For more information on calculating MAX 9000 timing delays, see *Application Note 77 (Understanding MAX 9000 Timing)*.

Figure 14. MAX 9000 Timing Model

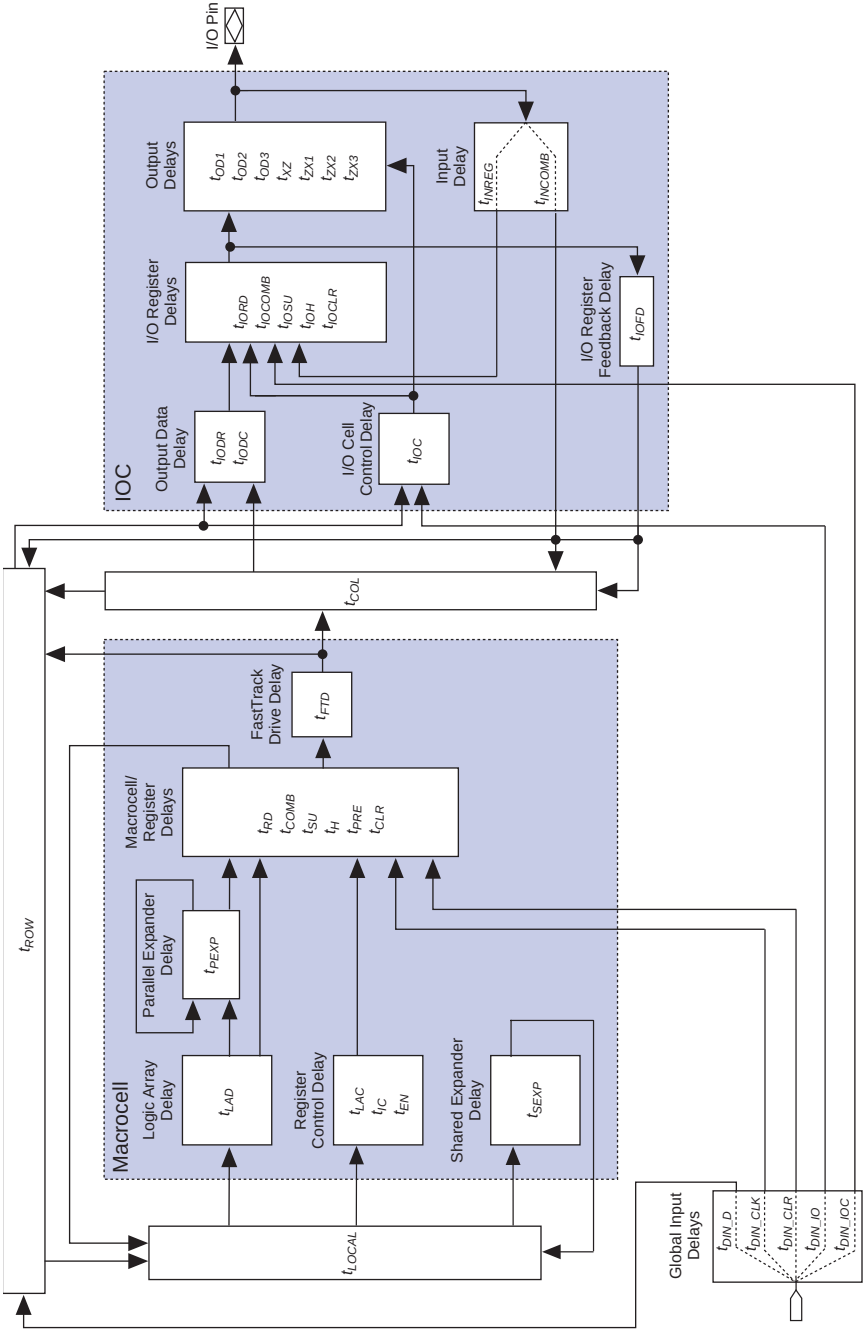

Tables 21 through 24 show timing for MAX 9000 devices.

Table 21. MAX 9000 External Timing Characteristics *Note (1)*

Symbol	Parameter	Conditions		Speed Grade						Unit
				-10		-15		-20		
				Min	Max	Min	Max	Min	Max	
t_{PD1}	Row I/O pin input to row I/O pin output	C1 = 35 pF *(2)*			10.0		15.0		20.0	ns
t_{PD2}	Column I/O pin input to column I/O pin output	C1 = 35 pF *(2)*	EPM9320A		10.8					ns
			EPM9320				16.0		23.0	ns
			EPM9400				16.2		23.2	ns
			EPM9480				16.4		23.4	ns
			EPM9560A		11.4					ns
			EPM9560				16.6		23.6	ns
t_{FSU}	Global clock setup time for I/O cell			3.0		5.0		6.0		ns
t_{FH}	Global clock hold time for I/O cell			0.0		0.0		0.0		ns
t_{FCO}	Global clock to I/O cell output delay	C1 = 35 pF		1.0 *(3)*	4.8	1.0 *(3)*	7.0	1.0 *(3)*	8.5	ns
t_{CNT}	Minimum internal global clock period	*(4)*			6.9		8.5		10.0	ns
f_{CNT}	Maximum internal global clock frequency	*(4)*		144.9		117.6		100.0		MHz

Table 22. MAX 9000 Internal Timing Characteristics *Note (1)*

Symbol	Parameter	Conditions	Speed Grade						Unit
			-10		-15		-20		
			Min	Max	Min	Max	Min	Max	
t_{LAD}	Logic array delay			3.5		4.0		4.5	ns
t_{LAC}	Logic control array delay			3.5		4.0		4.5	ns
t_{IC}	Array clock delay			3.5		4.0		4.5	ns
t_{EN}	Register enable time			3.5		4.0		4.5	ns
t_{SEXP}	Shared expander delay			3.5		5.0		7.5	ns
t_{PEXP}	Parallel expander delay			0.5		1.0		2.0	ns
t_{RD}	Register delay			0.5		1.0		1.0	ns
t_{COMB}	Combinatorial delay			0.4		1.0		1.0	ns
t_{SU}	Register setup time		2.4		3.0		4.0		ns
t_{H}	Register hold time		2.0		3.5		4.5		ns
t_{PRE}	Register preset time			3.5		4.0		4.5	ns
t_{CLR}	Register clear time			3.7		4.0		4.5	ns
t_{FTD}	FastTrack drive delay			0.5		1.0		2.0	ns
t_{LPA}	Low-power adder	*(5)*		10.0		15.0		20.0	ns

Table 23. IOC Delays

Symbol	Parameter	Conditions	Speed Grade						Unit
			-10		-15		-20		
			Min	Max	Min	Max	Min	Max	
t_{IODR}	I/O row output data delay			0.2		0.2		1.5	ns
t_{IODC}	I/O column output data delay			0.4		0.2		1.5	ns
t_{IOC}	I/O control delay	*(6)*		0.5		1.0		2.0	ns
t_{IORD}	I/O register clock-to-output delay			0.6		1.0		1.5	ns
t_{IOCOMB}	I/O combinatorial delay			0.2		1.0		1.5	ns
t_{IOSU}	I/O register setup time before clock		2.0		4.0		5.0		ns
t_{IOH}	I/O register hold time after clock		1.0		1.0		1.0		ns
t_{IOCLR}	I/O register clear delay			1.5		3.0		3.0	ns
t_{IOFD}	I/O register feedback delay			0.0		0.0		0.5	ns
t_{INREG}	I/O input pad and buffer to I/O register delay			3.5		4.5		5.5	ns
t_{INCOMB}	I/O input pad and buffer to row and column delay			1.5		2.0		2.5	ns
t_{OD1}	Output buffer and pad delay, Slow slew rate = off, V_{CCIO} = 5.0 V	C1 = 35 pF		1.8		2.5		2.5	ns
t_{OD2}	Output buffer and pad delay, Slow slew rate = off, V_{CCIO} = 3.3 V	C1 = 35 pF		2.3		3.5		3.5	ns
t_{OD3}	Output buffer and pad delay, Slow slew rate = on, V_{CCIO} = 5.0 V or 3.3 V	C1 = 35 pF		8.3		10.0		10.5	ns
t_{XZ}	Output buffer disable delay	C1 = 5 pF		2.5		2.5		2.5	ns
t_{ZX1}	Output buffer enable delay, Slow slew rate = off, V_{CCIO} = 5.0 V	C1 = 35 pF		2.5		2.5		2.5	ns
t_{ZX2}	Output buffer enable delay, Slow slew rate = off, V_{CCIO} = 3.3 V	C1 = 35 pF		3.0		3.5		3.5	ns
t_{ZX3}	Output buffer enable delay, Slow slew rate = on, V_{CCIO} = 3.3 V or 5.0 V	C1 = 35 pF		9.0		10.0		10.5	ns

Table 24. Interconnect Delays

Symbol	Parameter	Conditions	Speed Grade						Unit
			-10		-15		-20		
			Min	Max	Min	Max	Min	Max	
t_{LOCAL}	LAB local array delay			0.5		0.5		0.5	ns
t_{ROW}	FastTrack row delay	*(6)*		0.9		1.4		2.0	ns
t_{COL}	FastTrack column delay	*(6)*		0.9		1.7		3.0	ns
t_{DIN_D}	Dedicated input data delay			4.0		4.5		5.0	ns
t_{DIN_CLK}	Dedicated input clock delay			2.7		3.5		4.0	ns
t_{DIN_CLR}	Dedicated input clear delay			4.5		5.0		5.5	ns
t_{DIN_IOC}	Dedicated input I/O register clock delay			2.5		3.5		4.5	ns
t_{DIN_IO}	Dedicated input I/O register control delay			5.5		6.0		6.5	ns

Notes to tables:

(1) These values are specified under the MAX 9000 device recommended operating conditions, shown in Table 15 on page 27.

(2) See *Application Note 77 (Understanding MAX 9000 Timing)* for more information on test conditions for $\mathbf{t_{PD1}}$ and $\mathbf{t_{PD2}}$ delays.

(3) This parameter is a guideline that is sample-tested only. It is based on extensive device characterization. This parameter applies for both global and array clocking as well as both macrocell and I/O cell registers.

(4) Measured with a 16-bit loadable, enabled, up/down counter programmed in each LAB.

(5) The t_{LPA} parameter must be added to the t_{LOCAL} parameter for macrocells running in low-power mode.

(6) The t_{ROW}, t_{COL}, and t_{IOC} delays are worst-case values for typical applications. Post-compilation timing simulation or timing analysis is required to determine actual worst-case performance.

Power Consumption

The supply power (P) versus frequency ($\mathbf{f_{MAX}}$) for MAX 9000 devices can be calculated with the following equation:

$$P = P_{INT} + P_{IO} = I_{CCINT} \times V_{CC} + P_{IO}$$

The P_{IO} value, which depends on the device output load characteristics and switching frequency, can be calculated using the guidelines given in *Application Note 74 (Evaluating Power for Altera Devices)*. The I_{CCINT} value depends on the switching frequency and the application logic.

The I_{CCINT} value is calculated with the following equation:

$$I_{CCINT} = (A \times MC_{TON}) + [B \times (MC_{DEV} - MC_{TON})] + (C \times MC_{USED} \times \mathbf{f_{MAX}} \times \mathbf{tog_{LC}})$$

The parameters in this equation are shown below:

MC_{TON} = Number of macrocells with the Turbo Bit option turned on, as reported in the MAX+PLUS II Report File (**.rpt**)
MC_{DEV} = Number of macrocells in the device
MC_{USED} = Number of macrocells used in the design, as reported in the MAX+PLUS II Report File
$\mathbf{f_{MAX}}$ = Highest clock frequency to the device
$\mathbf{tog_{LC}}$ = Average percentage of logic cells toggling at each clock (typically 12.5%)
A, B, C = Constants, shown in Table 25

Table 25. MAX 9000 I_{CC} Equation Constants

Device	Constant A	Constant B	Constant C
EPM9320	0.81	0.33	0.056
EPM9320A	0.56	0.31	0.024
EPM9400	0.60	0.33	0.053
EPM9480	0.68	0.29	0.064
EPM9560	0.68	0.26	0.052
EPM9560A	0.56	0.31	0.024

This calculation provides an I_{CC} estimate based on typical conditions with no output load, using a typical pattern of a 16-bit, loadable, enabled up / down counter in each LAB. Actual I_{CC} values should be verified during operation, because the measurement is sensitive to the actual pattern in the device and the environmental operating conditions. Figure 15 shows typical supply current versus frequency for MAX 9000 devices.

Figure 15. I_{CC} vs. Frequency for MAX 9000 Devices (Part 1 of 2)

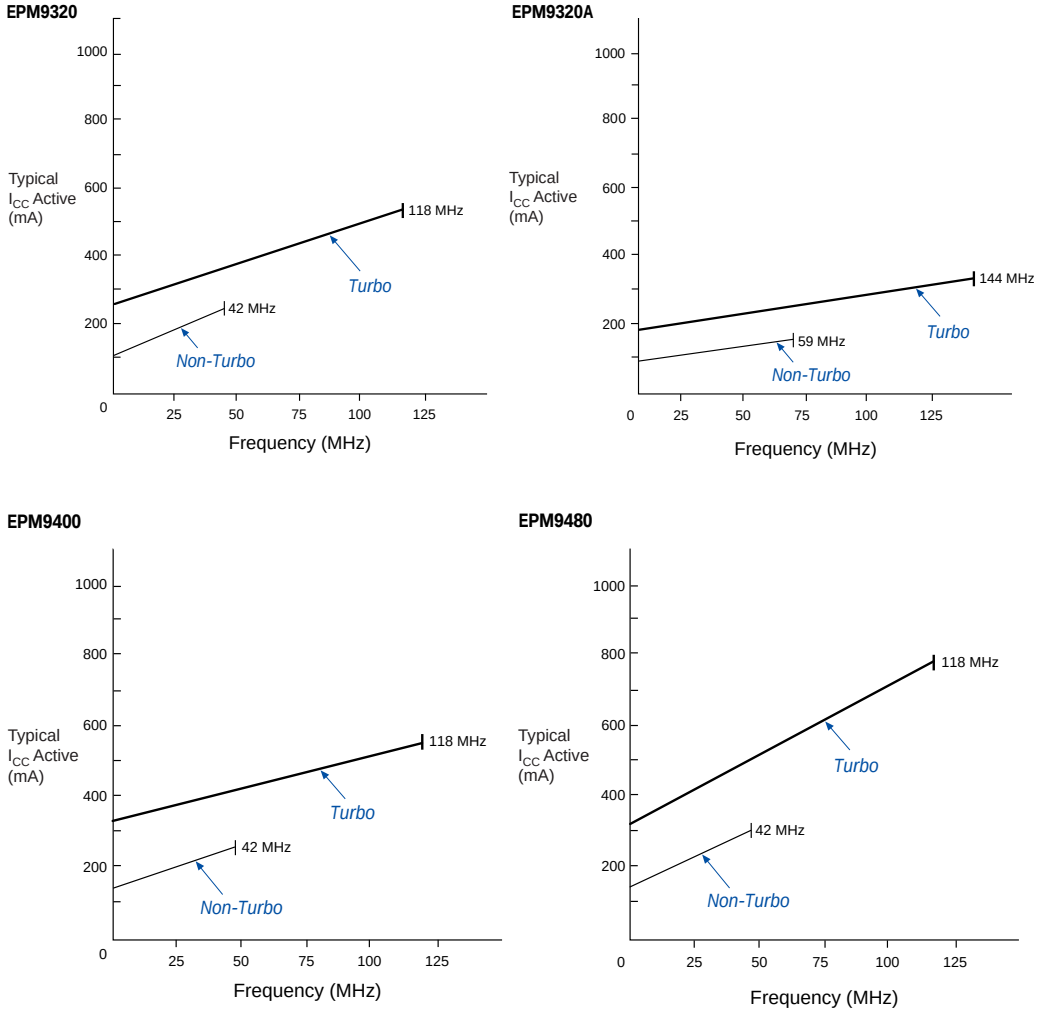

Figure 15. I_{CC} vs. Frequency for MAX 9000 Devices (Part 2 of 2)

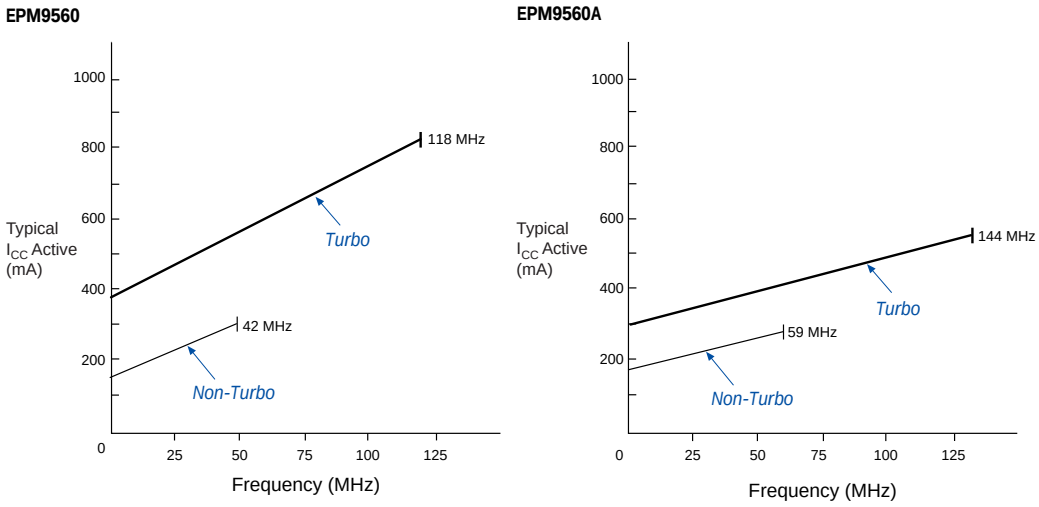

Device Pin-Outs

Tables 26 through 29 show the dedicated pin names and numbers for each EPM9320, EPM9320A, EPM9400, EPM9480, EPM9560, and EPM9560A device package.

Table 26. EPM9320 & EPM9320A Dedicated Pin-Outs (Part 1 of 2) *Note (1)*

Pin Name	84-Pin PLCC *(2)*	208-Pin RQFP	280-Pin PGA *(3)*	356-Pin BGA
DIN1 (GCLK1)	1	182	V10	AD13
DIN2 (GCLK2)	84	183	U10	AF14
DIN3 (GCLR)	13	153	V17	AD1
DIN4 (GOE)	72	4	W2	AC24
TCK	43	78	A9	A18
TMS	55	49	D6	E23
TDI	42	79	C11	A13
TDO	30	108	A18	D3

Table 26. EPM9320 & EPM9320A Dedicated Pin-Outs (Part 2 of 2) *Note (1)*

Pin Name	84-Pin PLCC *(2)*	208-Pin RQFP	280-Pin PGA *(3)*	356-Pin BGA
GND	6, 18, 24, 25, 48, 61, 67, 70	14, 20, 24, 31, 35, 41, 42, 43, 44, 46, 47, 66, 85, 102, 110, 113, 114, 115, 116, 118, 121, 122, 132, 133, 143, 152, 170, 189, 206	D4, D5, D16, E4, E5, E6, E15, E16, F5, F15, G5, G15, H5, H15, J5, J15, K5, K15, L5, L15, M5, M15, N5, N15, P4, P5, P15, P16, R4, R5, R15, R16, T4, T5, T16	A9, A22, A25, A26, B25, B26, D2, E1, E26, F2, G1, G25, G26, H2, J1, J25, J26, K2, L26, M26, N1, N25, P26, R2, T1, U2, U26, V1, V25, W25, Y26, AA2, AB1, AB26, AC26, AE1, AF1, AF2, AF4, AF7, AF20
VCCINT (5.0 V only)	14, 21, 28, 57, 64, 71	10, 19, 30, 45, 112, 128, 139, 148	D15, E8, E10, E12, E14, R7, R9, R11, R13, R14, T14	D26, F1, H1, K26, N26, P1, U1, W26, AE26, AF25, AF26
VCCIO (3.3 or 5.0 V)	15, 37, 60, 79	5, 25, 36, 55, 72, 91, 111, 127, 138, 159, 176, 195	D14, E7, E9, E11, E13, R6, R8, R10, R12, T13, T15	A1, A2, A21, B1, B10, B24, D1, H26, K1, M25, R1, V26, AA1, AC25, AF5, AF8, AF19
No Connect (N.C.)	29	6, 7, 8, 9, 11, 12, 13, 15, 16, 17, 18, 109, 140, 141, 142, 144, 145, 146, 147, 149, 150, 151	B6, K19, L2, L4, L18, L19, M1, M2, M3, M4, M16, M17, M18, M19, N1, N2, N3, N4, N16, N17, N18, N19, P1, P2, P3, P17, P18, P19, R1, R2, R3, R17, R18, R19, T1, T2, T3, T17, T18, T19, U1, U2, U3, U17, U18, U19, V1, V2, V19, W1	B4, B5, B6, B7, B8, B9, B11, B12, B13, B14, B15, B16, B18, B19, B20, B21, B22, B23, C4, C23, D4, D23, E4, E22, F4, F23, G4, H4, H23, J23, K4, L4, L23, N4, P4, P23, R3, R26, T2, T3, T4, T5, T22, T23, T24, T25, T26, U3, U4, U5, U22, U23, U24, U25, V2, V3, V4, V5, V22, V23, V24, W1, W2, W3, W4, W5, W22, W23, W24, Y1, Y2, Y3, Y4, Y5, Y22, Y23, Y24, Y25, AA3, AA4, AA5, AA22, AA23, AA24, AA25, AA26, AB2, AB3, AB4, AB5, AB23, AB24, AB25, AC1, AC2, AC23, AD4, AD23, AE4, AE5, AE6, AE7, AE9, AE11, AE12, AE14, AE15, AE16, AE18, AE19, AE20, AE21, AE22, AE23
VPP *(4)*	56	48	C4	E25
Total User I/O Pins *(5)*	60	132	168	168

Notes:
(1) All pins not listed are user I/O pins.
(2) Perform a complete thermal analysis before committing a design to this device package. See *Application Note 74 (Evaluating Power for Altera Devices)*.
(3) EPM9320A devices are not offered in this package.
(4) During in-system programming, each device's VPP pin must be connected to the 5.0-V power supply. During normal device operation, the VPP pin is pulled up internally and can be connected to the 5.0-V supply or left unconnected.
(5) The user I/O pin count includes dedicated input pins and all I/O pins.

Table 27. EPM9400 Dedicated Pin-Outs *Note (1)*

Pin Name	84-Pin PLCC *(2)*	208-Pin RQFP	240-Pin RQFP
DIN1 (GCLK1)	2	182	210
DIN2 (GCLK2)	1	183	211
DIN3 (GCLR)	12	153	187
DIN4 (GOE)	74	4	234
TCK	43	78	91
TMS	54	49	68
TDI	42	79	92
TDO	31	108	114
GND	6, 13, 20, 26, 27, 47, 60, 66, 69, 73	14, 20, 24, 31, 35, 41, 42, 43, 44, 46, 47, 66, 85, 102, 110, 113, 114, 115, 116, 118, 121, 122, 132, 133, 143, 152, 170, 189, 206	5, 14, 25, 34, 45, 54, 65, 66, 81, 96, 110, 115, 126, 127, 146, 147, 166, 167, 186, 200, 216, 229
VCCINT (5.0 V only)	16, 23, 30, 56, 63, 70	10, 19, 30, 45, 112, 128, 139, 148	4, 24, 44, 64, 117, 137, 157, 177
VCCIO (3.3 or 5.0 V)	17, 37, 59, 80	5, 25, 36, 55, 72, 91, 111, 127, 138, 159, 176, 195	15, 35, 55, 73, 86, 101, 116, 136, 156, 176, 192, 205, 220, 235
No Connect (N.C.)	–	6, 7, 8, 9, 11, 12, 13, 109, 144, 145, 146, 147, 149, 150, 151	1, 2, 3, 6, 7, 8, 9, 10, 11, 12, 13, 168, 169, 170, 171, 172, 173, 174, 175, 178, 179, 180, 181, 182, 183, 184, 185, 236, 237, 238, 239, 240
VPP *(3)*	55	48	67
Total User I/O Pins *(4)*	59	139	159

Notes:
(1) All pins not listed are user I/O pins.
(2) Perform a complete thermal analysis before committing a design to this device package. See *Application Note 74 (Evaluating Power for Altera Devices)* for more information.
(3) During in-system programming, each device's VPP pin must be connected to the 5.0-V power supply. During normal device operation, the VPP pin is pulled up internally and can be connected to the 5.0-V supply or left unconnected.
(4) The user I/O pin count includes dedicated input pins and all I/O pins.

Table 28. EPM9480 Dedicated Pin-Outs *Note (1)*

Pin Name	208-Pin RQFP	240-Pin RQFP
DIN1 (GCLK1)	182	210
DIN2 (GCLK2)	183	211
DIN3 (GCLR)	153	187
DIN4 (GOE)	4	234
TCK	78	91
TMS	49	68
TDI	79	92
TDO	108	114
GND	14, 20, 24, 31, 35, 41, 42, 43, 44, 46, 47, 66, 85, 102, 110, 113, 114, 115, 116, 118, 121, 122, 132, 133, 143, 152, 170, 189, 206	5, 14, 25, 34, 45, 54, 65, 66, 81, 96, 110, 115, 126, 127, 146, 147, 166, 167, 186, 200, 216, 229
VCCINT (5.0 V only)	10, 19, 30, 45, 112, 128, 139, 148	4, 24, 44, 64, 117, 137, 157, 177
VCCIO (3.3 or 5.0 V)	5, 25, 36, 55, 72, 91, 111, 127, 138, 159, 176, 195	15, 35, 55, 73, 86, 101, 116, 136, 156, 176, 192, 205, 220, 235
No Connect (N.C.)	6, 7, 8, 9, 109, 149, 150, 151	1, 2, 3, 178, 179, 180, 181, 182, 183, 184, 185, 236, 237, 238, 239, 240
VPP *(2)*	48	67
Total User I/O Pins *(3)*	146	175

Notes:

(1) All pins not listed are user I/O pins.

(2) During in-system programming, each device's VPP pin must be connected to the 5.0-V power supply. During normal device operation, the VPP pin is pulled up internally and can be connected to the 5.0-V supply or left unconnected.

(3) The user I/O pin count includes dedicated input pins and all I/O pins.

Table 29. EPM9560 & EPM9560A Dedicated Pin-Outs (Part 1 of 2) *Note (1)*

Pin Name	208-Pin RQFP	240-Pin RQFP	280-Pin PGA *(2)*	304-Pin RQFP *(2)*	356-Pin BGA
DIN1 (GCLK1)	182	210	V10	266	AD13
DIN2 (GCLK2)	183	211	U10	267	AF14
DIN3 (GCLR)	153	187	V17	237	AD1
DIN4 (GOE)	4	234	W2	296	AC24
TCK	78	91	A9	114	A18
TMS	49	68	D6	85	E23
TDI	79	92	C11	115	A13
TDO	108	114	A18	144	D3
GND	14, 20, 24, 31, 35, 41, 42, 43, 44, 46, 47, 66, 85, 102, 110, 113, 114, 115, 116, 118, 121, 122, 132, 133, 143, 152, 170, 189, 206	5, 14, 25, 34, 45, 54, 65, 66, 81, 96, 110, 115, 126, 127, 146, 147, 166, 167, 186, 200, 216, 229	D4, D5, D16, E4, E5, E6, E15, E16, F5, F15, G5, G15, H5, H15, J5, J15, K5, K15, L5, L15, M5, M15, N5, N15, P4, P5, P15, P16, R4, R5, R15, R16, T4, T5, T16	13, 22, 33, 42, 53, 62, 73, 74, 102, 121, 138, 155, 166, 167, 186, 187, 206, 207, 226, 254, 273, 290	A9, A22, A25, A26, B25, B26, D2, E1, E26, F2, G1, G25, G26, H2, J1, J25, J26, K2, L26, M26, N1, N25, P26, R2, T1, U2, U26, V1, V25, W25, Y26, AA2, AB1, AB26, AC26, AE1, AF1, AF2, AF4, AF7, AF20
VCCINT (5.0 V only)	10, 19, 30, 45, 112, 128, 139, 148	4, 24, 44, 64, 117, 137, 157, 177	D15, E8, E10, E12, E14, R7, R9, R11, R13, R14, T14	12, 32, 52, 72, 157, 177, 197, 217	D26, F1, H1, K26, N26, P1, U1, W26, AE26, AF25, AF26
VCCIO (3.3 or 5.0 V)	5, 25, 36, 55, 72, 91, 111, 127, 138, 159, 176, 195	15, 35, 55, 73, 86, 101, 116, 136, 156, 176, 192, 205, 220, 235	D14, E7, E9, E11, E13, R6, R8, R10, R12, T13, T15	3, 23, 43, 63, 91, 108, 127, 156, 176, 196, 216, 243, 260, 279	A1, A2, A21, B1, B10, B24, D1, H26, K1, M25, R1, V26, AA1, AC25, AF5, AF8, AF19

Table 29. EPM9560 & EPM9560A Dedicated Pin-Outs (Part 2 of 2) *Note (1)*

Pin Name	208-Pin RQFP	240-Pin RQFP	280-Pin PGA *(2)*	304-Pin RQFP *(2)*	356-Pin BGA
No Connect (N.C.)	109	–	B6, W1	1, 2, 76, 77, 78, 79, 80, 81, 82, 83, 84, 145, 146, 147, 148, 149, 150, 151, 152, 153, 154, 227, 228, 229, 230, 231, 232, 233, 234, 235, 236, 297, 298, 299, 300, 301, 302, 303, 304	B4, B5, B6, B7, B8, B9, B11, B12, B13, B14, B15, B16, B18, B19, B20, B21, B22, B23, C4, C23, D4, D23, E4, E22, F4, F23, G4, H4, H23, J23, K4, L4, L23, N4, P4, P23, T4, T23, U4, V4, V23, W4, Y4, AA4, AA23, AB4, AB23, AC23, AD4, AD23, AE4, AE5, AE6, AE7, AE9, AE11, AE12, AE14, AE15, AE16, AE18, AE19, AE20, AE21, AE22, AE23
VPP *(3)*	48	67	C4	75	E25
Total User I/O Pins *(4)*	153	191	216	216	216

Notes:

(1) All pins not listed are user I/O pins.

(2) EPM9560A devices are not offered in this package.

(3) During in-system programming, each device's VPP pin must be connected to the 5.0-V power supply. During normal device operation, the VPP pin is pulled up internally and can be connected to the 5.0-V supply or left unconnected.

(4) The user I/O pin count includes dedicated input pins and all I/O pins.

Revision History

Information contained in the *MAX 9000 Programmable Logic Device Family Data Sheet* version 6.5 supersedes information published in previous versions.

Version 6.5

Version 6.6 of the *MAX 9000 Programmable Logic Device Family Data Sheet* contains the following change:

- Added Tables 7 through 9.
- Added "Programming Sequence" on page 20 and "Programming Times" on page 20

Version 6.4

Version 6.4 of the *MAX 9000 Programmable Logic Device Family Data Sheet* contains the following change: Updated text on page 23.

Version 6.3

Version 6.3 of the *MAX 9000 Programmable Logic Device Family Data Sheet* contains the following change: added Note (7) to Table 16.

101 Innovation Drive
San Jose, CA 95134
(408) 544-7000
http://www.altera.com
Applications Hotline:
(800) 800-EPLD
Customer Marketing:
(408) 544-7104
Literature Services:
lit_req@altera.com

Copyright © 2003 Altera Corporation. All rights reserved. Altera, The Programmable Solutions Company, the stylized Altera logo, specific device designations, and all other words and logos that are identified as trademarks and/or service marks are, unless noted otherwise, the trademarks and service marks of Altera Corporation in the U.S. and other countries. All other product or service names are the property of their respective holders. Altera products are protected under numerous U.S. and foreign patents and pending applications, maskwork rights, and copyrights. Altera warrants performance of its semiconductor products to current specifications in accordance with Altera's standard warranty, but reserves the right to make changes to any products and services at any time without notice. Altera assumes no responsibility or liability arising out of the application or use of any information, product, or service described herein except as expressly agreed to in writing by Altera Corporation. Altera customers are advised to obtain the latest version of device specifications before relying on any published information and before placing orders for products or services.

I.S. EN ISO 9001

Printed on Recycled Paper.

Общество с ограниченной ответственностью «МосЧип» ИНН 7719860671 / КПП 771901001
Адрес: 105318, г.Москва, ул.Щербаковская д.3, офис 1107

Данный компонент на территории Российской Федерации

Вы можете приобрести в компании MosChip.

Для оперативного оформления запроса Вам необходимо перейти по данной ссылке:

http://moschip.ru/get-element

Вы можете разместить у нас заказ для любого Вашего проекта, будь то серийное производство или разработка единичного прибора.

В нашем ассортименте представлены ведущие мировые производители активных и пассивных электронных компонентов.

Нашей специализацией является поставка электронной компонентной базы двойного назначения, продукции таких производителей как XILINX, Intel (ex.ALTERA), Vicor, Microchip, Texas Instruments, Analog Devices, Mini-Circuits, Amphenol, Glenair.

Сотрудничество с глобальными дистрибьюторами электронных компонентов, предоставляет возможность заказывать и получать с международных складов практически любой перечень компонентов в оптимальные для Вас сроки.

На всех этапах разработки и производства наши партнеры могут получить квалифицированную поддержку опытных инженеров.

Система менеджмента качества компании отвечает требованиям в соответствии с ГОСТ Р ИСО 9001, ГОСТ РВ 0015-002 и ЭС РД 009

Офис по работе с юридическими лицами:

105318, г.Москва, ул.Щербаковская д.3, офис 1107, 1118, ДЦ «Щербаковский»

Телефон: +7 495 668-12-70 (многоканальный)

Факс: +7 495 668-12-70 (доб.304)

E-mail: info@moschip.ru

Skype отдела продаж:
moschip.ru
moschip.ru_4
moschip.ru_6
moschip.ru_9