| Product P/N | Wistron P/N | BGA Array Pattern |
|---|---|---|
| 10129553-14430TxLF | 550.00501.0011 | 6X25 |
| 10129553-14430MxLF | 550.00501.0001 | |
| 10129553-14430WxLF | 550.00501.0021 | |

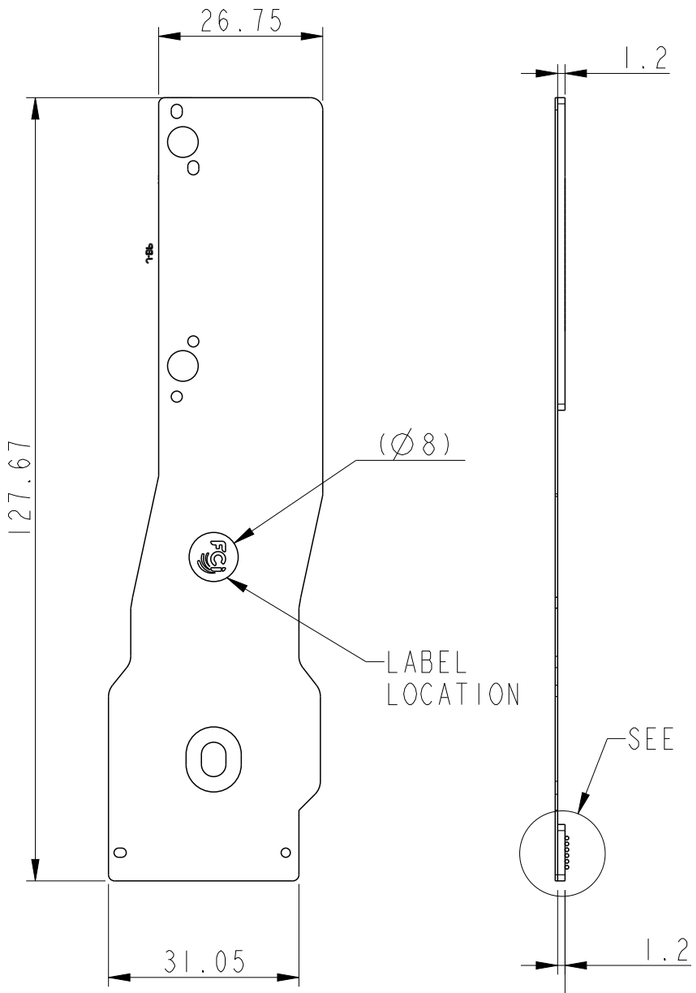


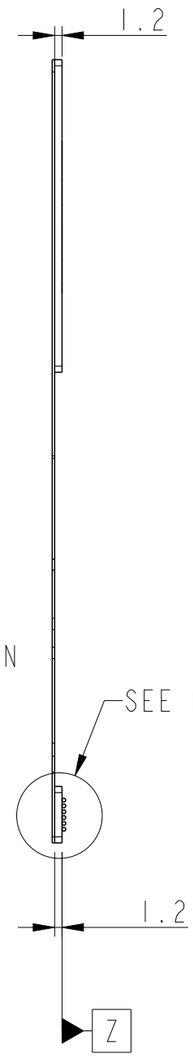


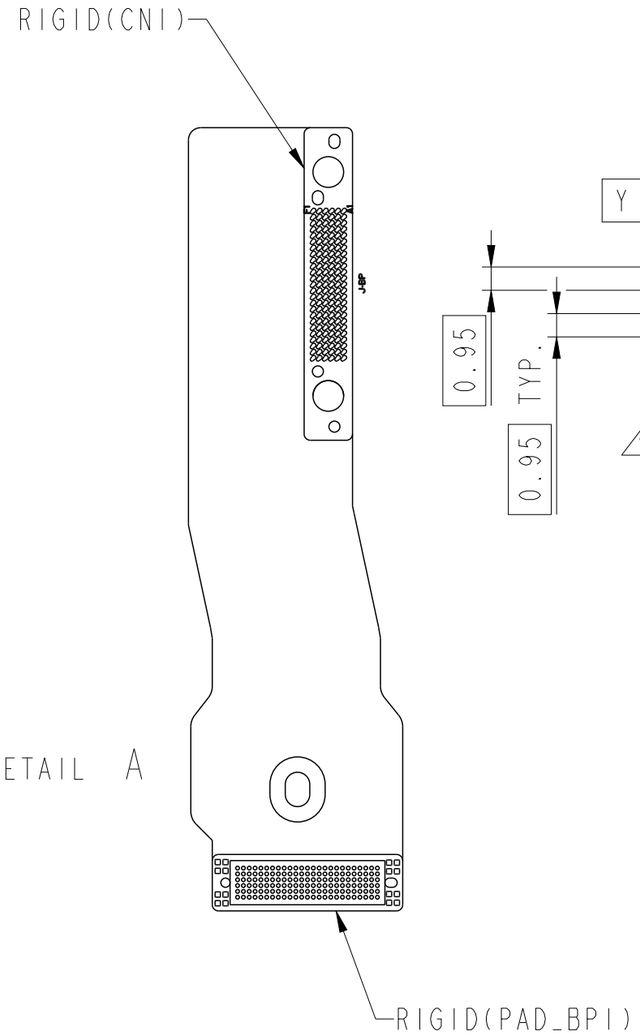


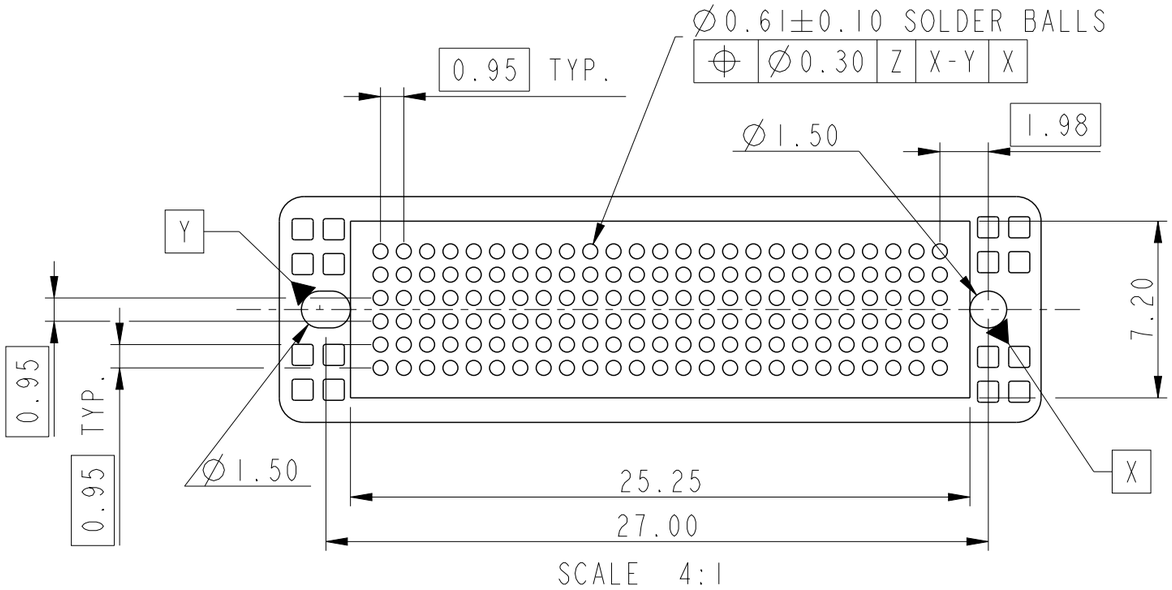


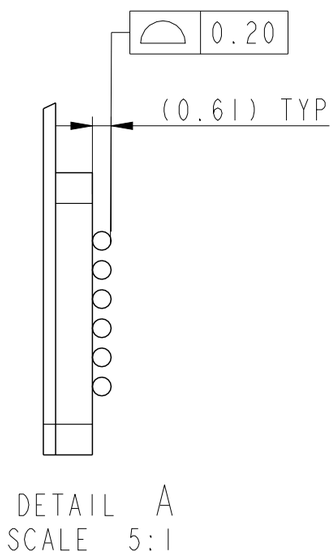


| | | | | | | | | |
|---|---|---|---|---|---|---|---|---|
| spec ref | - | | | dr | Zhen Luo | 2016/08/18 | projection | MM |
| tolerance std ASME Y14.5 | TOLERANCES UNLESS OTHERWISE SPECIFIED | | | eng | Michael Song | 2016/12/07 | | |
| | | | | chr | Heaven Cen | 2016/12/07 | | |
| | | | | appr | Pei-Ming Zheng | 2016/12/07 | product family | - |
| surface ASME Y14.5 | linear | 0.X | ±0.30 | Amphenol FCi | title Flex Cable BGA Assembly Brawn | | dwg no 10129553 | rev B |
| | | 0.XX | ±0.20 | | | | | |
| | | 0.XXX | ±0.10 | | | | | |
| | angular | 0° | ±2° | | cat. no. - | | Product - Customer Drw | sheet 1 of 11 |

| size | scale |
|---|---|
| A3 | 1:1 |
| ecn no | ELX-DG-25561-1 |
| rel level | Released |

© 2016 AFCI

Creo File - REV E - 2016-02-12

| Product P/N | Wistron P/N | BGA Array Pattern |
|---|---|---|
| 10129553-14426TxLF | 550.00609.0001 | 6X17 |
| 10129553-14426MxLF | 550.00609.0011 | |
| 10129553-14426WxLF | 550.00609.0021 | |

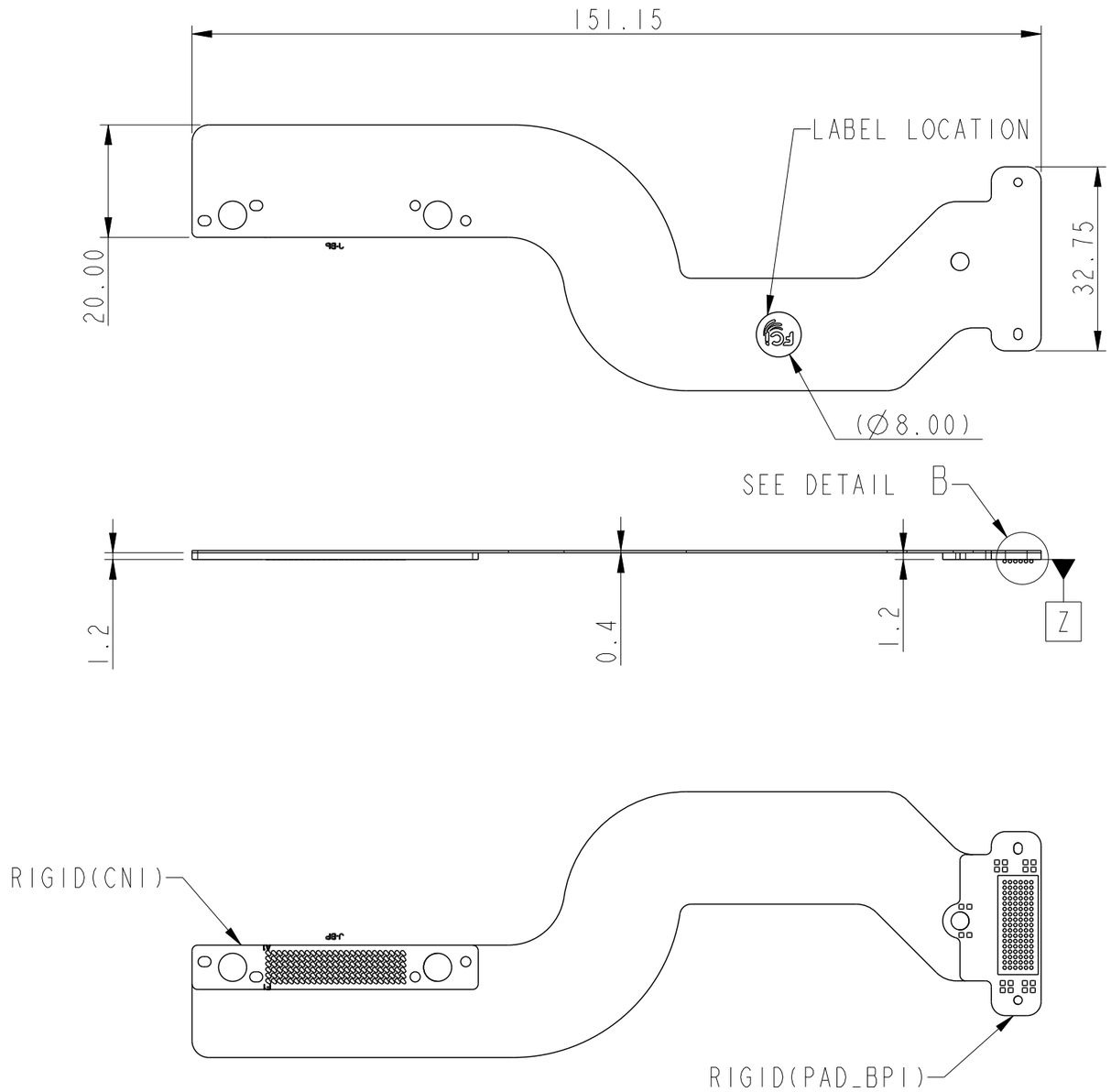


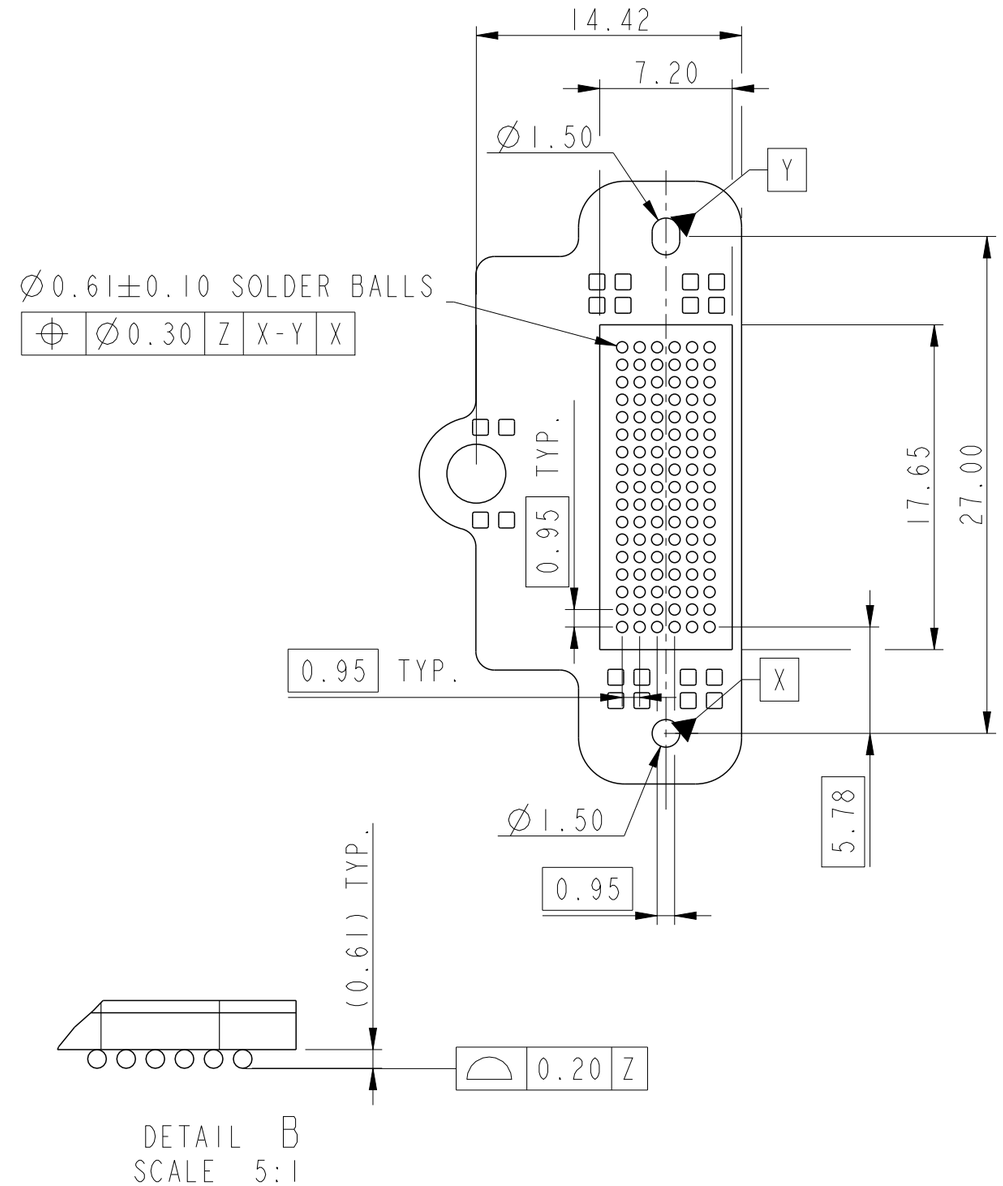


| | | | | | | | | |
|---|---|---|---|---|---|---|---|---|
| spec ref | - | | | dr | Zhen Luo | 2016/08/18 | projection | MM |
| tolerance std ASME Y14.5 | TOLERANCES UNLESS OTHERWISE SPECIFIED | | | eng | Michael Song | 2016/12/07 | | |
| | | | | chr | Heaven Cen | 2016/12/07 | | |
| | | | | appr | Pei-Ming Zheng | 2016/12/07 | product family | - |
| surface ASME Y14.5 | linear | 0.X | ±0.30 | Amphenol FCi | title Flex Cable BGA Assembly Brawn | | dwg no 10129553 | rev B |
| | | 0.XX | ±0.20 | | | | | |
| | | 0.XXX | ±0.10 | | | | | |
| | angular | 0° | ±2° | | cat. no. - | Product - Customer Drw | | sheet 2 of 11 |

size A3 | scale 1:1 | ecn no ELX-DG-25561-1 | rel level **Released**

© 2016 AFCI

Creo File - REV E - 2016-02-12

| Product P/N | Wistron P/N | BGA Array Pattern |
|---|---|---|
| 10129553-14425TxLF | 550.0060A.0001 | 6X14 |
| 10129553-14425MxLF | 550.0060A.0011 | |
| 10129553-14425WxLF | 550.0060A.0021 | |

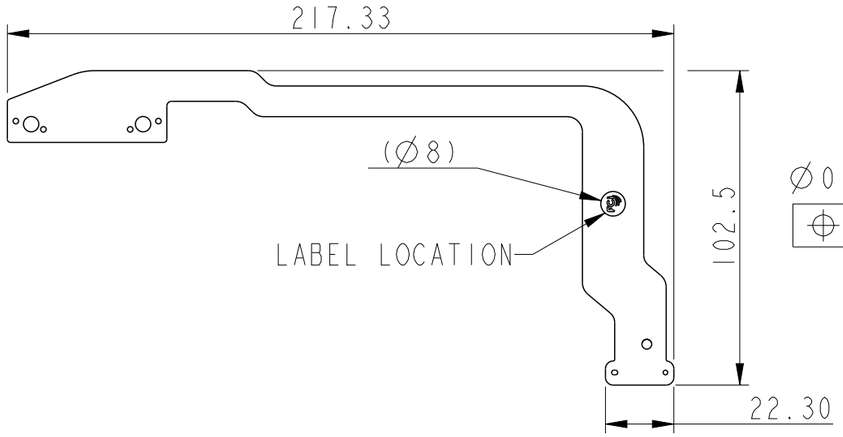


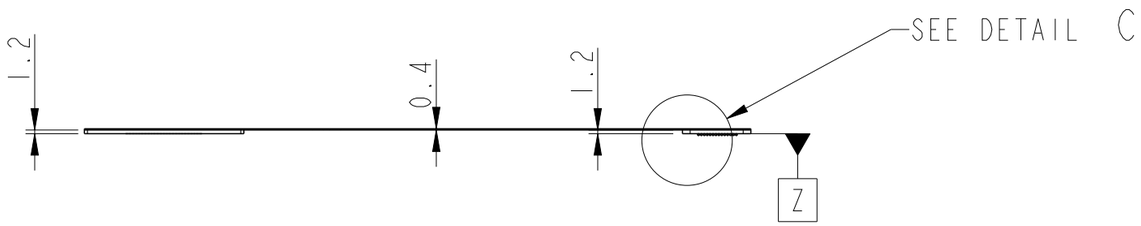


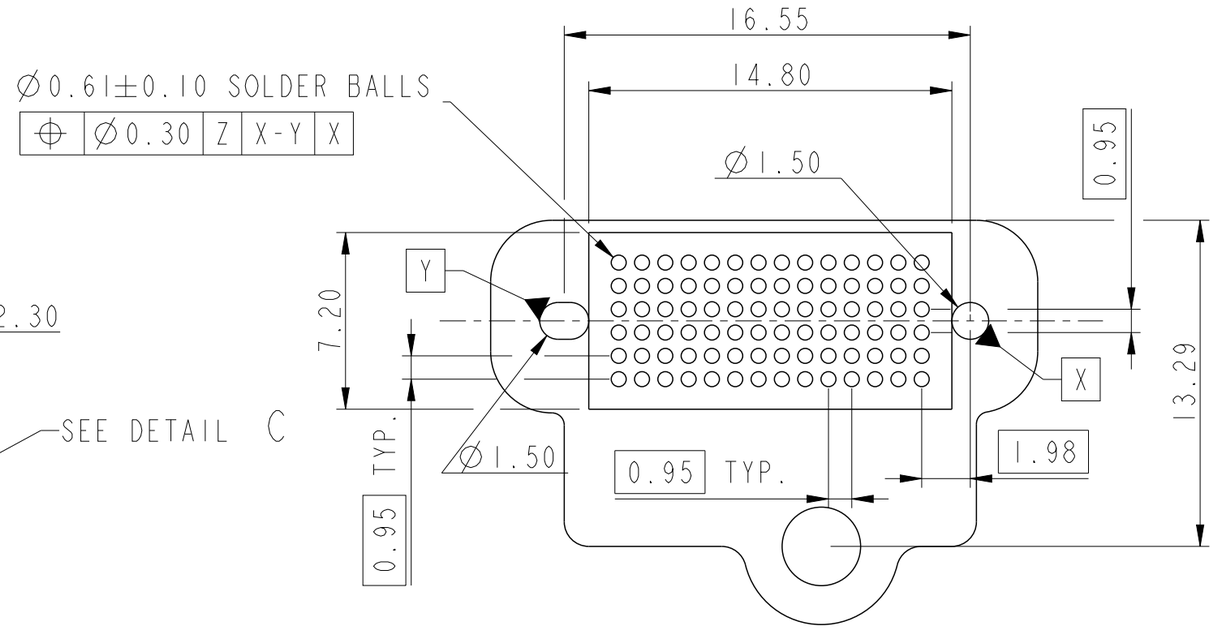


SCALE 4:1

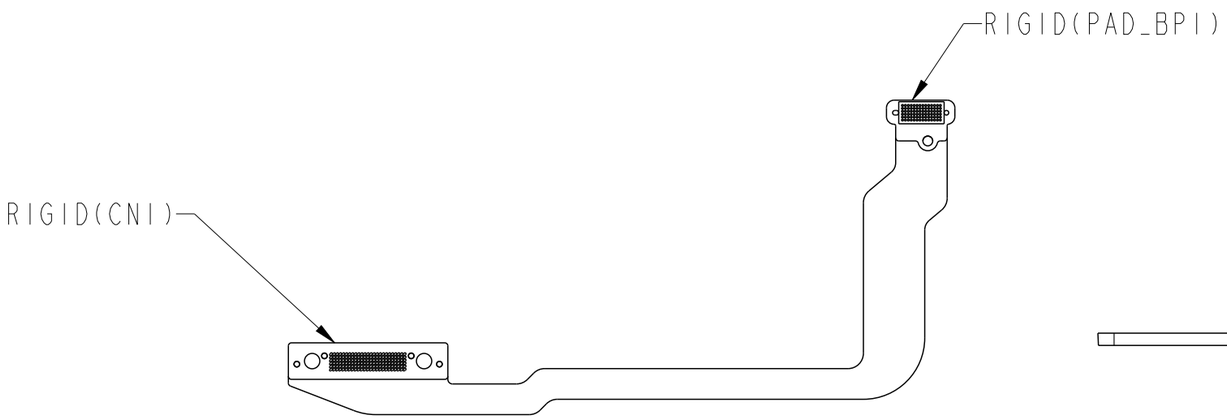


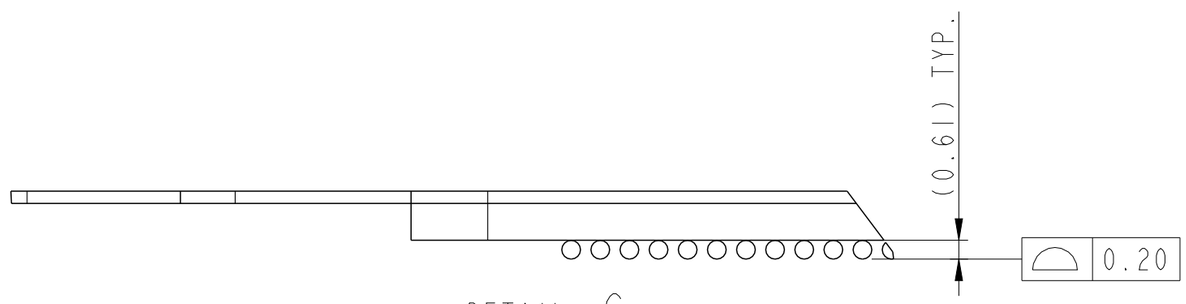


DETAIL C
SCALE 5:1

| | | | | | | | | |
|---|---|---|---|---|---|---|---|---|
| spec ref | - | | | dr | Zhen Luo | 2016/08/18 | projection | MM |
| tolerance std ASME Y14.5 | TOLERANCES UNLESS OTHERWISE SPECIFIED | | | eng | Michael Song | 2016/12/07 | | |
| | | | | chr | Heaven Cen | 2016/12/07 | | |
| | | | | appr | Pei-Ming Zheng | 2016/12/07 | product family | - |
| surface ASME Y14.5 | linear | 0.X | ±0.30 | title | Flex Cable BGA Assembly | | dwg no | 10129553 |
| | | 0.XX | ±0.20 | | Brawn | | | |
| | | 0.XXX | ±0.10 | | | | | |
| | angular | 0° | ±2° | cat. no. | - | Product - Customer Drw | | |

| | |
|---|---|
| size | A3 |
| scale | 1:2 |
| ecn no | ELX-DG-25561-1 |
| rel level | Released |
| rev | B |
| sheet 3 of 11 | |

Amphenol FCi

© 2016 AFCI

Creo File - REV E - 2016-02-12

| Product P/N | Wistron P/N | BGA Array Pattern |
|---|---|---|
| 10129553-14423TxLF | 550.0060C.0001 | 6X17,6X24 |
| 10129553-14423MxLF | 550.0060C.0011 | |
| 10129553-14423WxLF | 550.0060C.0021 | |

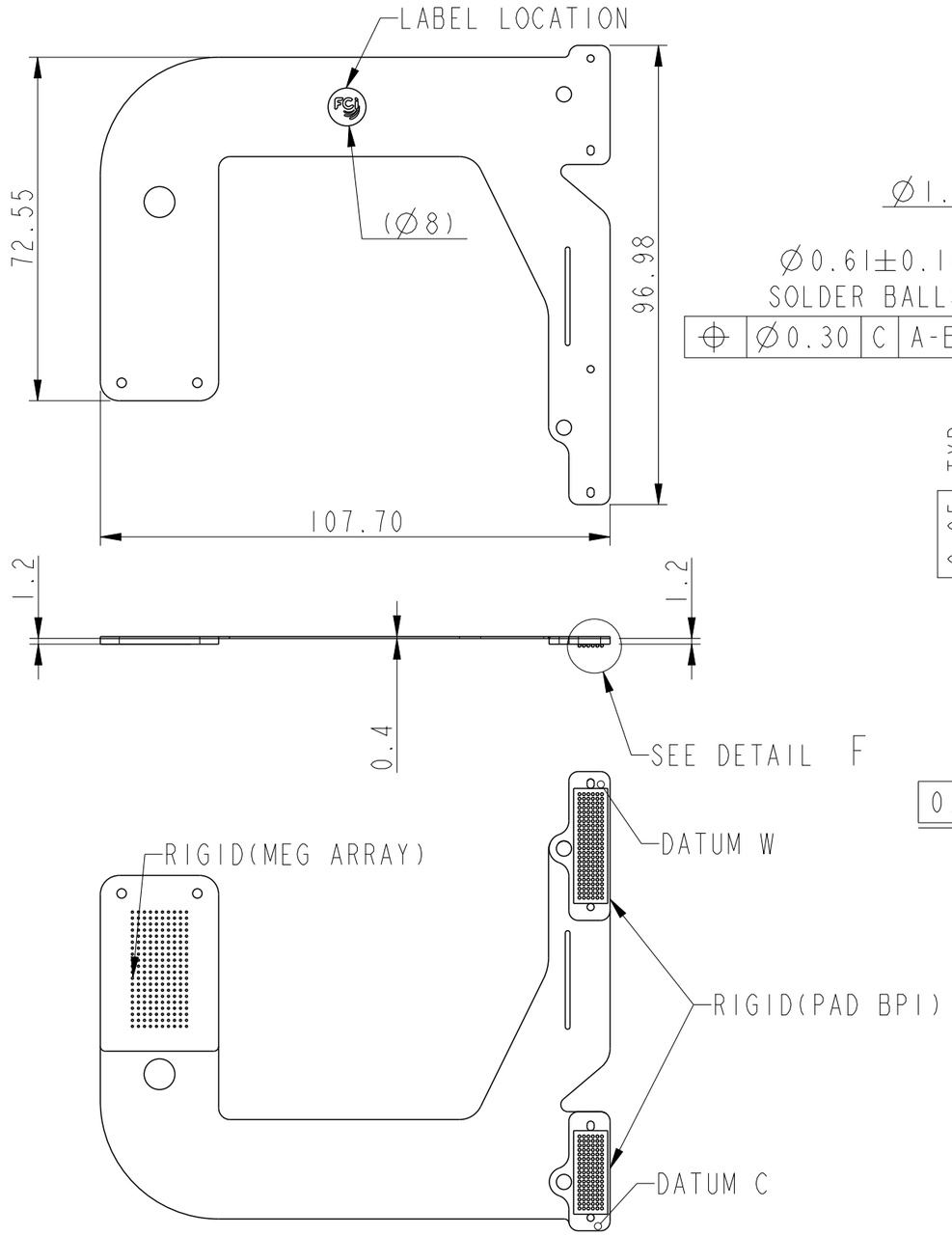


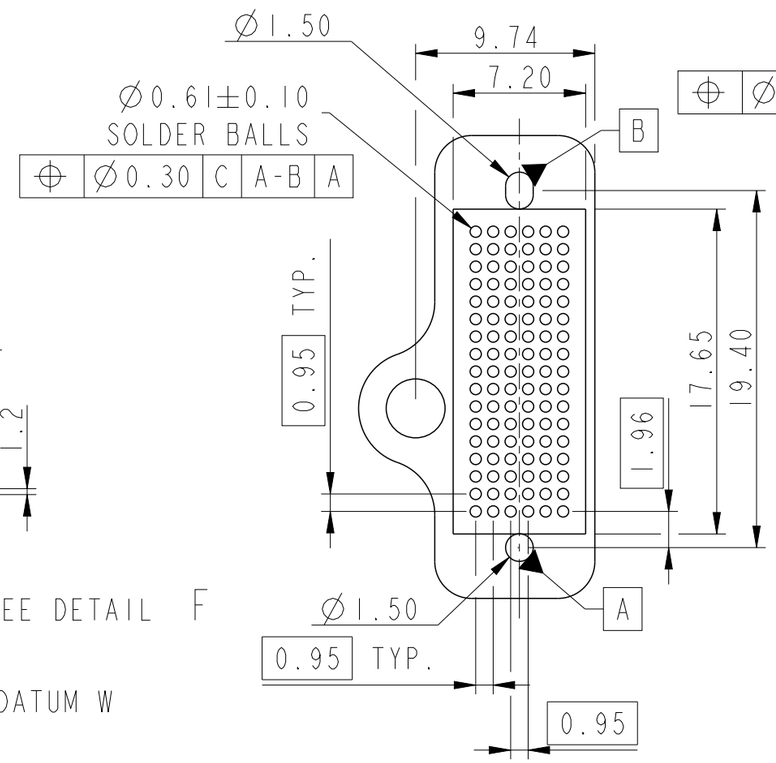


SCALE 3:1

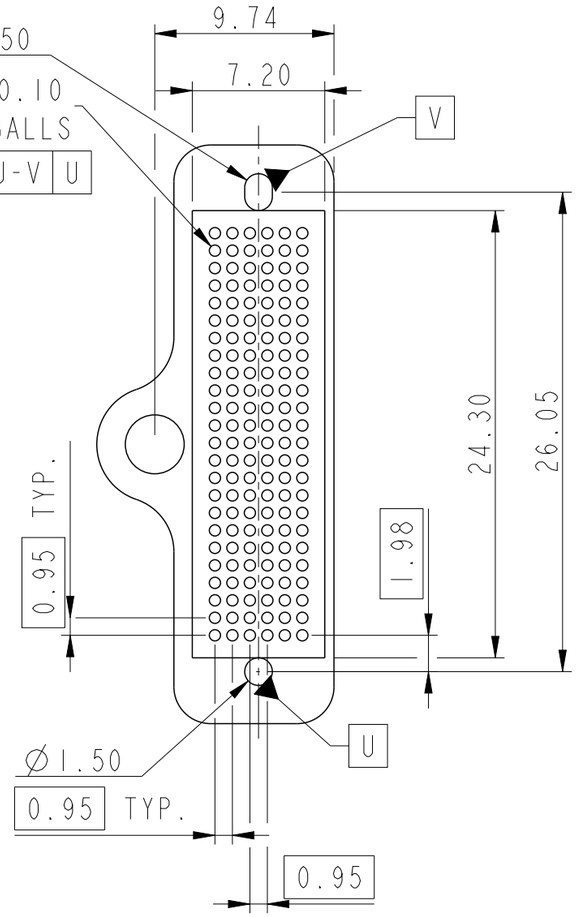


SCALE 3:1

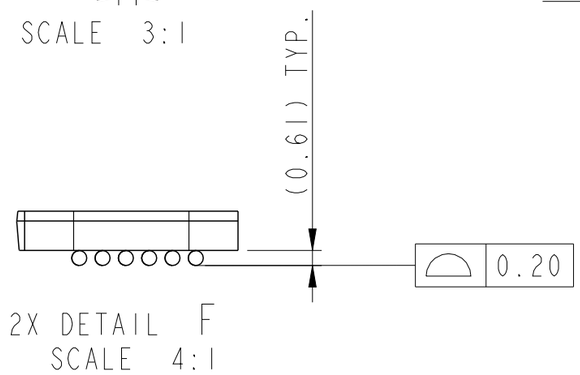


2X DETAIL F
SCALE 4:1

| | | | | | | | |
|---|---|---|---|---|---|---|---|
| spec ref | - | dr | Zhen Luo | 2016/08/18 | projection | MM | size A3 / scale 4:5 |
| tolerance std ASME Y14.5 | TOLERANCES UNLESS OTHERWISE SPECIFIED | eng | Michael Song | 2016/12/07 | | | ecn no ELX-DG-25561-1 |
| | | chr | Heaven Cen | 2016/12/07 | | | |
| | | appr | Pei-Ming Zheng | 2016/12/07 | product family - | | rel level **Released** |
| surface ASME Y14.5 | linear 0.X ±0.30; 0.XX ±0.20; 0.XXX ±0.10; angular 0° ±2° | Amphenol FCi | title Flex Cable BGA Assembly Brawn | | dwg no 10129553 | | rev B |
| | | | cat. no. - | | Product - Customer Drw | | sheet 4 of 11 |

© 2016 AFCI

Creo File - REV E - 2016-02-12

| Product P/N | Wistron P/N | BGA Array Pattern |
|---|---|---|
| 10129553-14424TxLF | 550.0060B.0001 | 6X25 |
| 10129553-14424MxLF | 550.0060B.0011 | |
| 10129553-14424WxLF | 550.0060B.0021 | |

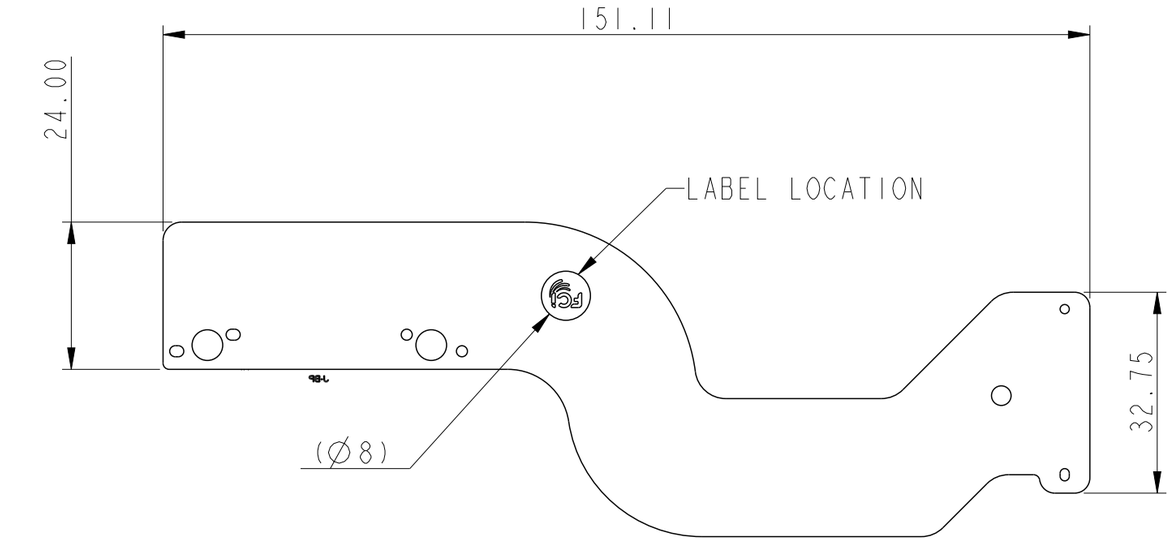


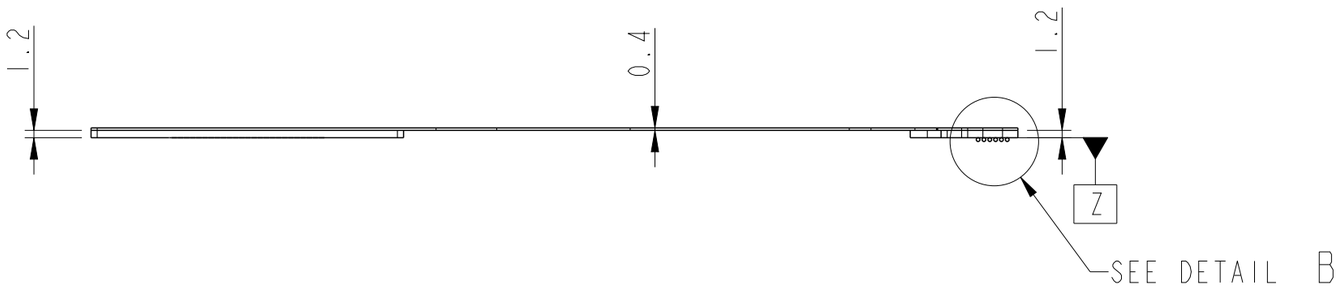


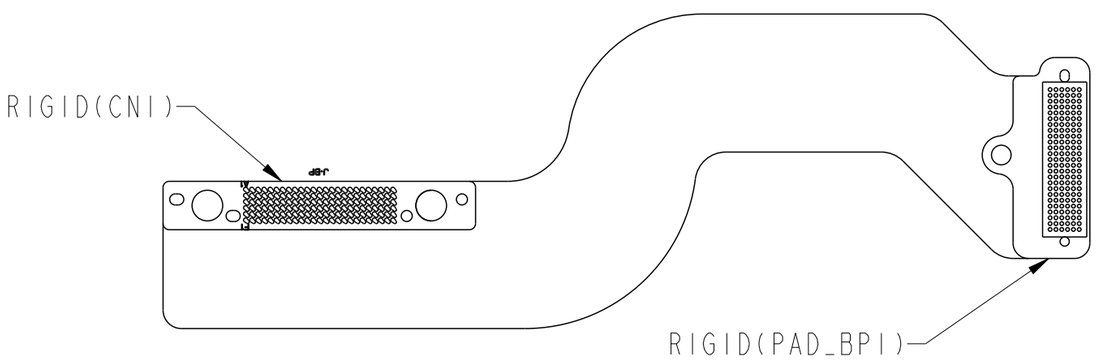


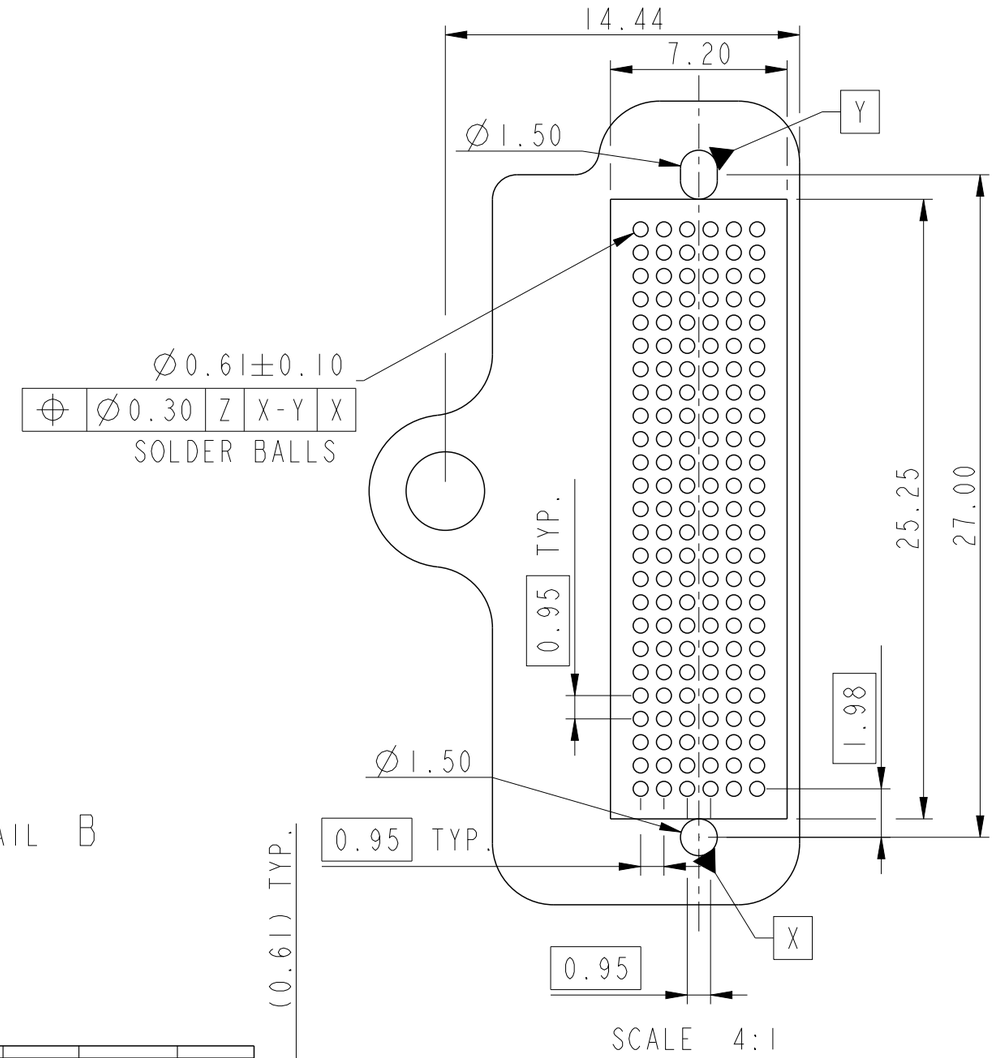


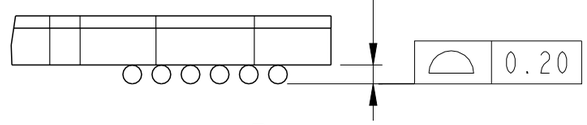


DETAIL B
SCALE 5:1

| | | | | | | | | |
|---|---|---|---|---|---|---|---|---|
| spec ref | - | | | dr | Zhen Luo | 2016/08/18 | projection | MM | size A3 | scale 1:1 |
| tolerance std ASME Y14.5 | TOLERANCES UNLESS OTHERWISE SPECIFIED | | | eng | Michael Song | 2016/12/07 | | | ecn no | ELX-DG-25561-1 |
| | | | | chr | Heaven Cen | 2016/12/07 | | | | |
| | | | | appr | Pei-Ming Zheng | 2016/12/07 | product family | - | rel level | Released |
| surface ASME Y14.5 | linear | 0.X | ±0.30 | Amphenol FCi | title Flex Cable BGA Assembly Brawn | | dwg no 10129553 | | rev B |
| | | 0.XX | ±0.20 | | | | | | |
| | | 0.XXX | ±0.10 | | | | | | |
| | angular | 0° | ±2° | | cat. no. - | | Product - Customer Drw | | sheet 5 of 11 |

© 2016 AFCI

Creo File - REV E - 2016-02-12

PDS: Rev :B STATUS:Released Printed: Dec 07, 2016

| Product P/N | Wistron P/N | BGA Array Pattern |
|---|---|---|
| 10129553-14428TxLF | 550.00504.0011 | 6X24,6X17 |
| 10129553-14428MxLF | 550.00504.0001 | |
| 10129553-14428WxLF | 550.00504.0021 | |

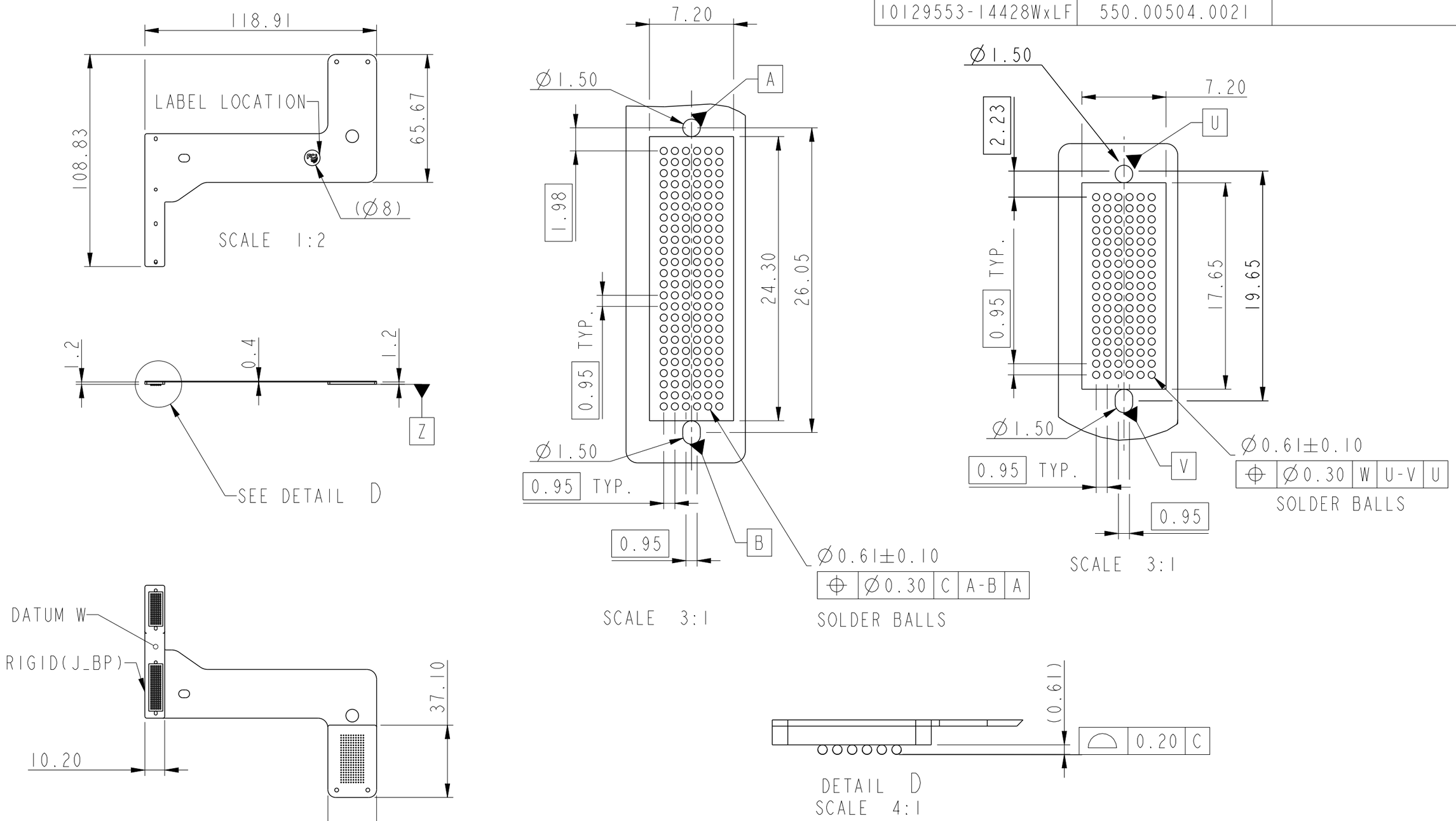


| | | | | | | | |
|---|---|---|---|---|---|---|---|
| spec ref | - | dr | Zhen Luo | 2016/08/18 | projection | MM | size A3 / scale 1:1 |
| tolerance std ASME Y14.5 | TOLERANCES UNLESS OTHERWISE SPECIFIED | eng | Michael Song | 2016/12/07 | | | |
| | | chr | Heaven Cen | 2016/12/07 | | | ecn no ELX-DG-25561-1 |
| | | appr | Pei-Ming Zheng | 2016/12/07 | product family | - | rel level Released |
| surface ASME Y14.5 | linear 0.X ±0.30; 0.XX ±0.20; 0.XXX ±0.10; angular 0° ±2° | Amphenol FCi | title Flex Cable BGA Assembly Brawn | | dwg no 10129553 | | rev B |
| | | | cat. no. - | | Product - Customer Drw | | sheet 6 of 11 |

© 2016 AFCI

Creo File - REV E - 2016-02-12

| Product P/N | Wistron P/N | BGA Array Pattern |
|---|---|---|
| 10129553-14429TxLF | 550.00503.0031 | 6X25 |
| 10129553-14429MxLF | 550.00503.0001 | |
| 10129553-14429WxLF | 550.00503.0021 | |

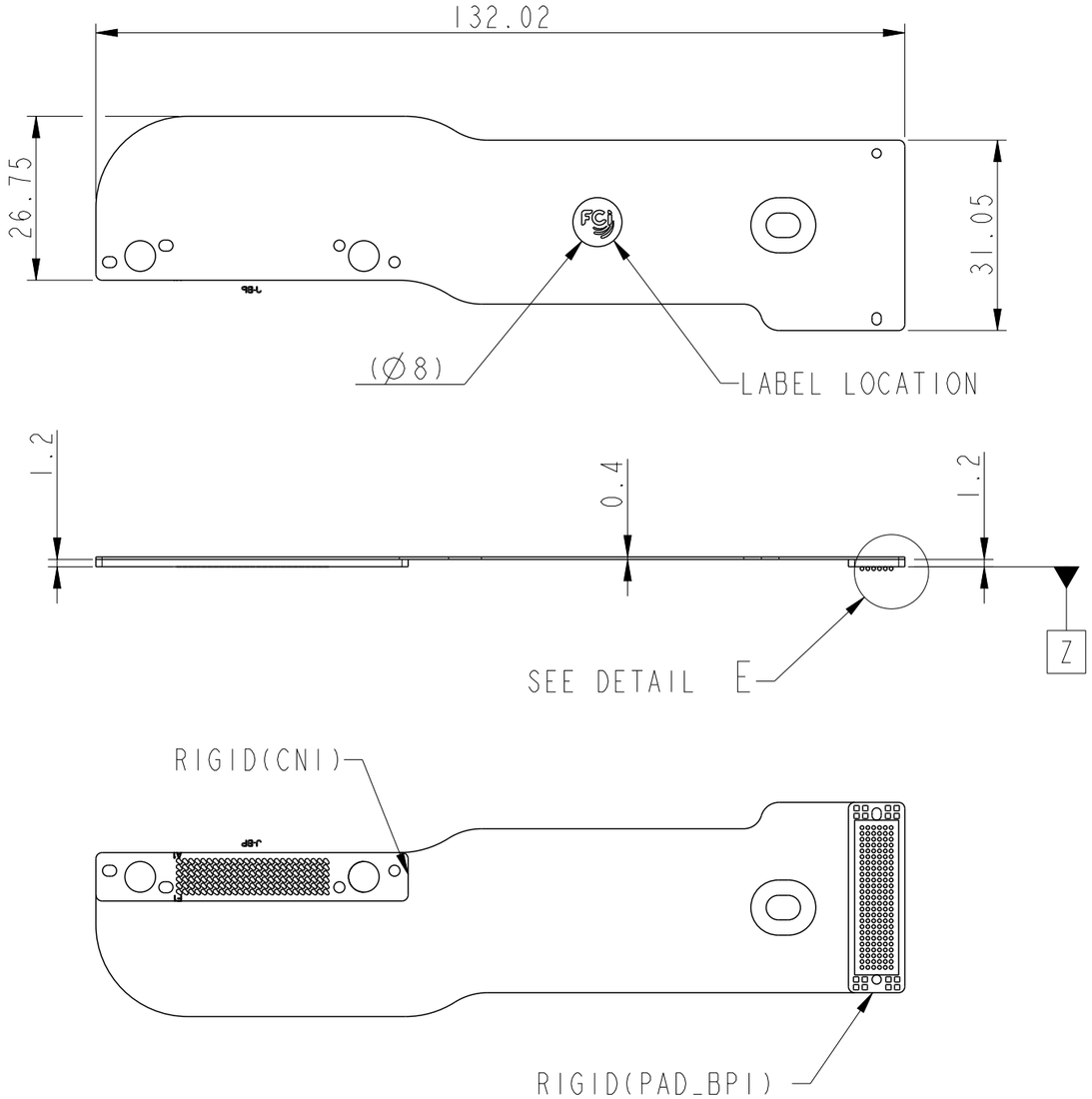


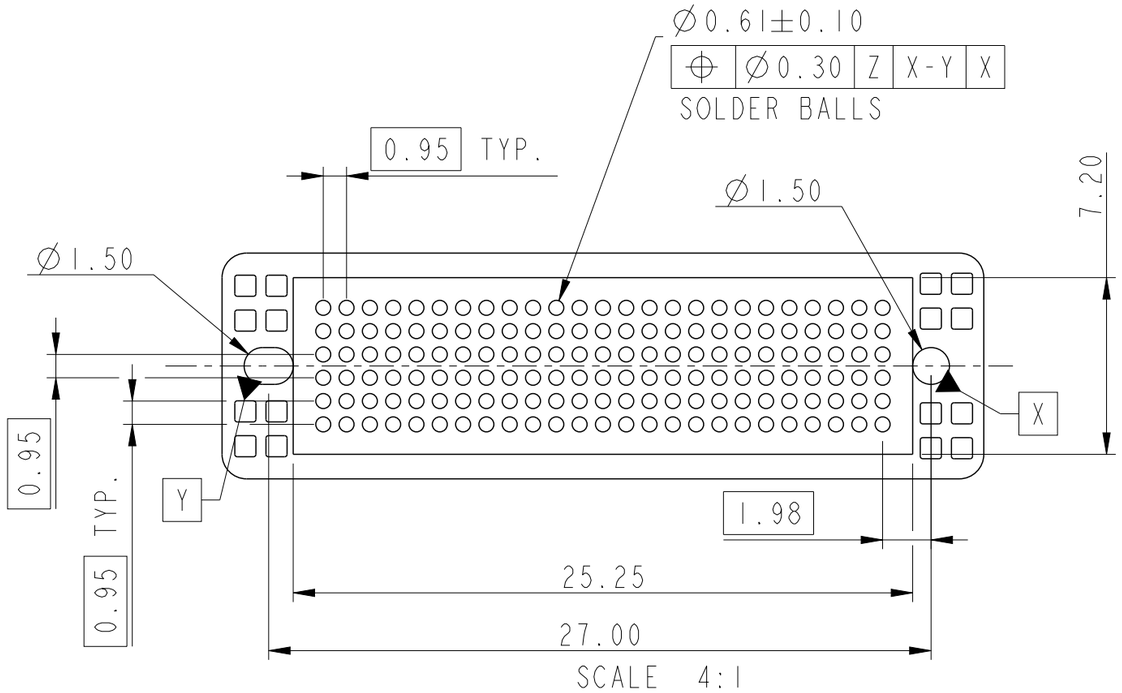


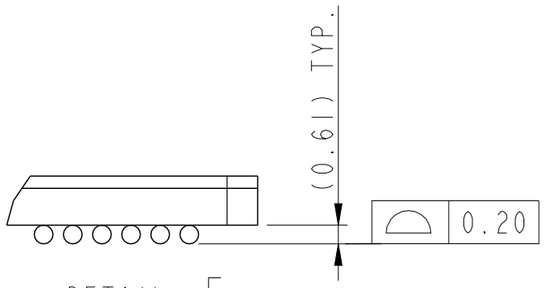


DETAIL E
SCALE 5:1

| | | | | | | | | |
|---|---|---|---|---|---|---|---|---|
| spec ref | - | | | dr | Zhen Luo | 2016/08/18 | projection | MM |
| tolerance std ASME Y14.5 | TOLERANCES UNLESS OTHERWISE SPECIFIED | | | eng | Michael Song | 2016/12/07 | | |
| | | | | chr | Heaven Cen | 2016/12/07 | | |
| | | | | appr | Pei-Ming Zheng | 2016/12/07 | product family | - |
| surface ASME Y14.5 | linear | 0.X | ±0.30 | title | Flex Cable BGA Assembly Brawn | | dwg no | 10129553 |
| | | 0.XX | ±0.20 | | | | | |
| | | 0.XXX | ±0.10 | | | | | |
| | angular | 0° | ±2° | cat. no. | - | Product - Customer Drw | | |

| size | scale |
|---|---|
| A3 | 1:1 |
| ecn no | ELX-DG-25561-1 |
| rel level | Released |
| rev | B |
| sheet 7 of 11 | |

Amphenol FCi

© 2016 AFCI

Creo File - REV E - 2016-02-12

| Product P/N | Wistron P/N | BGA Array Pattern |
|---|---|---|
| 10129553-14460TxLF | 550.0060D.0001 | 6X14 |
| 10129553-14460MxLF | 550.0060D.0011 | |
| 10129553-14460WxLF | 550.0060D.0021 | |

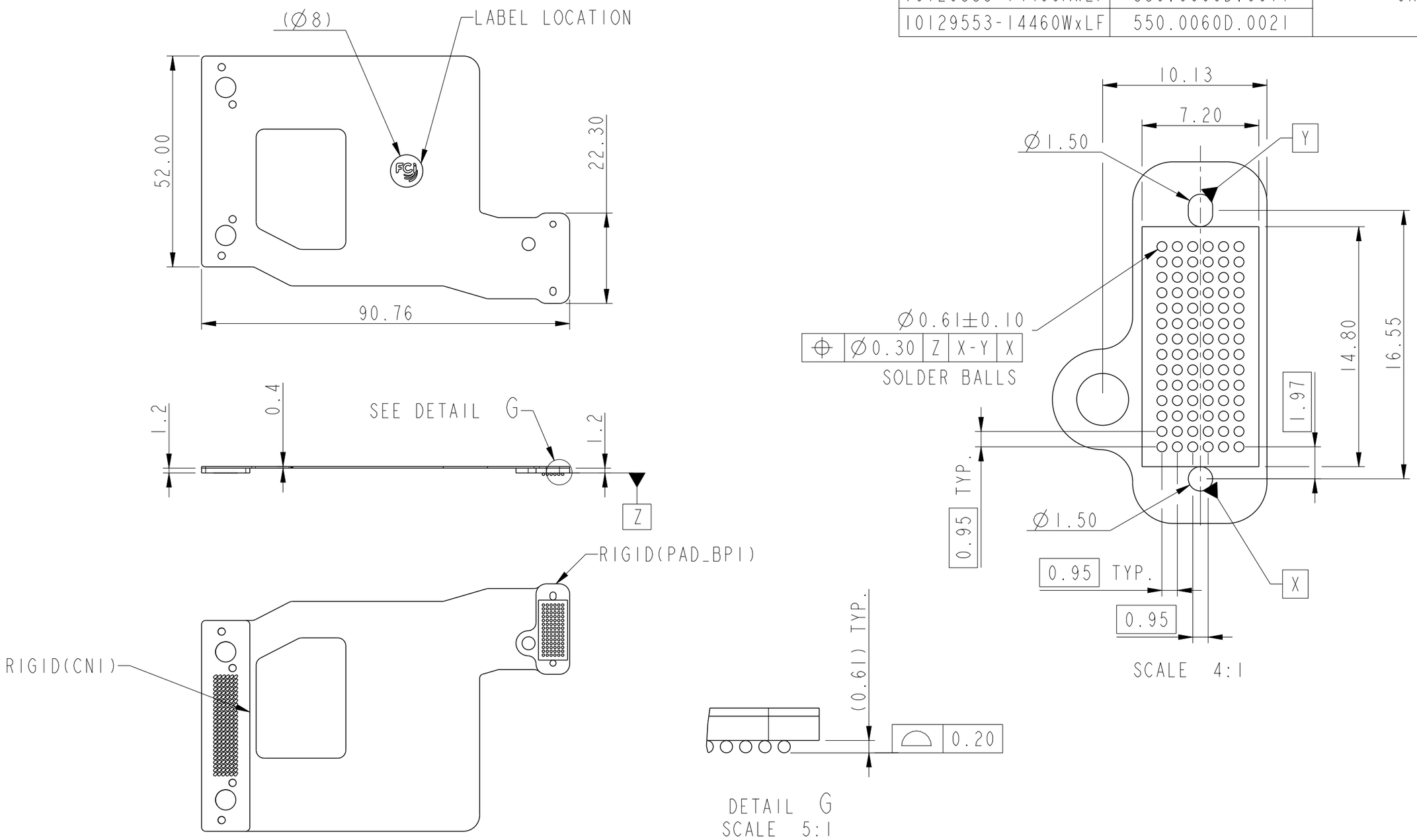


| | | | | | | | |
|---|---|---|---|---|---|---|---|
| spec ref | - | | | dr | Zhen Luo | 2016/08/18 | |
| tolerance std ASME Y14.5 | TOLERANCES UNLESS OTHERWISE SPECIFIED | | | eng | Michael Song | 2016/12/07 | |
| | | | | chr | Heaven Cen | 2016/12/07 | |
| | | | | appr | Pei-Ming Zheng | 2016/12/07 | |
| surface ✓ ASME Y14.5 | linear | 0.X | ±0.30 | | | | |
| | | 0.XX | ±0.20 | | | | |
| | | 0.XXX | ±0.10 | | | | |
| | angular | 0° | ±2° | | | | |

projection | MM | size A3 | scale 1:1
ecn no ELX-DG-25561-1
product family - | rel level **Released**

Amphenol FCi

title: Flex Cable BGA Assembly
Brawn

dwg no 10129553 | rev **B**

cat. no. - | Product - Customer Drw | sheet 8 of 11

© 2016 AFCI

Creo File - REV E - 2016-02-12

| Product P/N | Wistron P/N | BGA Array Pattern |
|---|---|---|
| 10129553-14461TxLF | 550.00505.0011 | 6X14 |
| 10129553-14461MxLF | 550.00502.0001 | |
| 10129553-14461WxLF | 550.00505.0021 | |

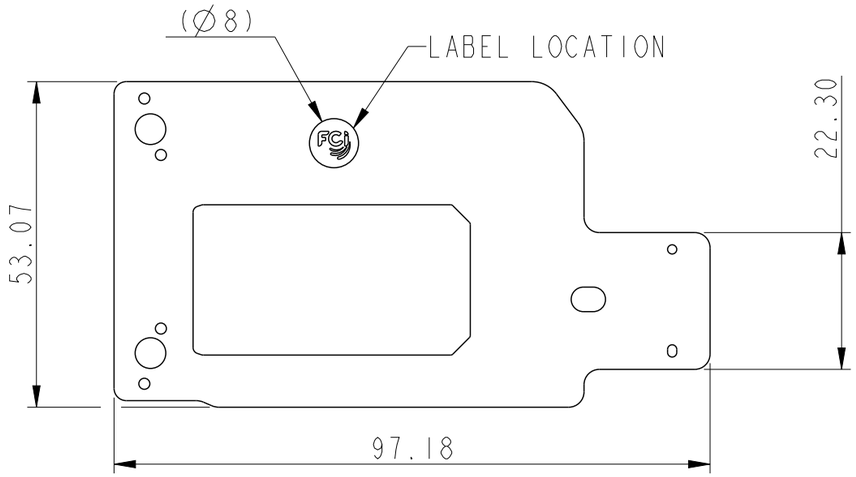


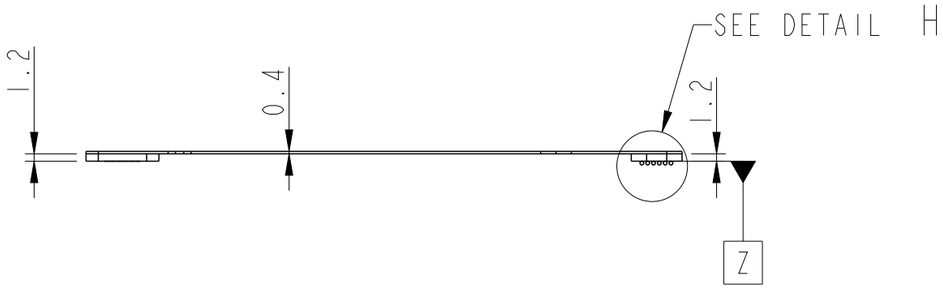


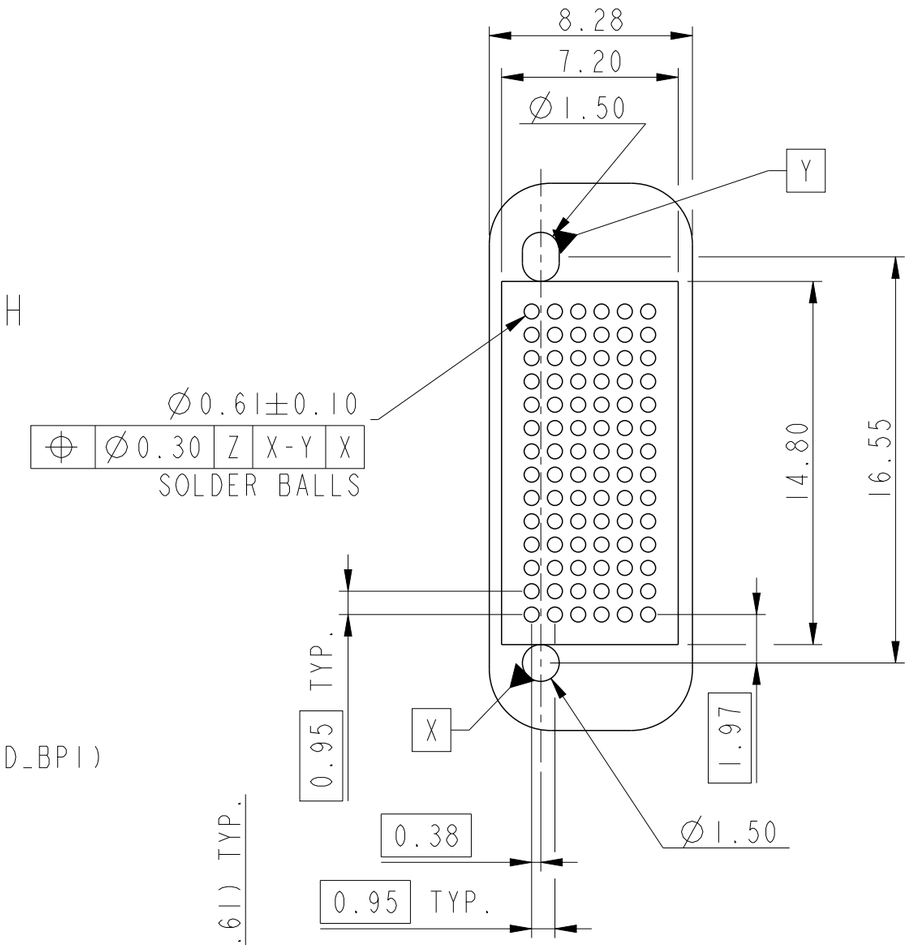


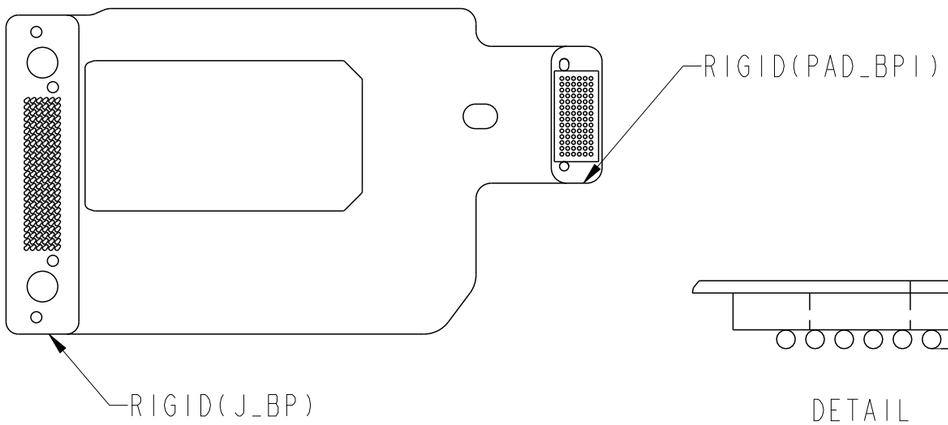


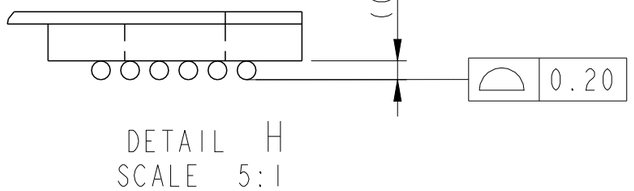


| | | | | | | | | | |
|---|---|---|---|---|---|---|---|---|---|
| spec ref | - | | | dr | Zhen Luo | 2016/08/18 | projection | MM | size A3 / scale 1:1 |
| tolerance std ASME Y14.5 | TOLERANCES UNLESS OTHERWISE SPECIFIED | | | eng | Michael Song | 2016/12/07 | | | ecn no ELX-DG-25561-1 |
| | | | | chr | Heaven Cen | 2016/12/07 | | | |
| | | | | appr | Pei-Ming Zheng | 2016/12/07 | product family - | | rel level **Released** |
| surface ✓ | linear | 0.X | ±0.30 | Amphenol FCi | title Flex Cable BGA Assembly | | dwg no 10129553 | | rev B |
| | | 0.XX | ±0.20 | | Brawn | | | | |
| | | 0.XXX | ±0.10 | | | | | | |
| ASME Y14.5 | angular | 0° | ±2° | | cat. no. - | | Product - Customer Drw | | sheet 9 of 11 |

© 2016 AFCI

Creo File - REV E - 2016-02-12

| Product P/N | Wistron P/N | BGA Array Pattern |
|---|---|---|
| 10129553-14531TxLF | 550.00507.0011 | 6X25 |
| 10129553-14531MxLF | 550.00507.0001 | |
| 10129553-14531WxLF | 550.00507.0021 | |

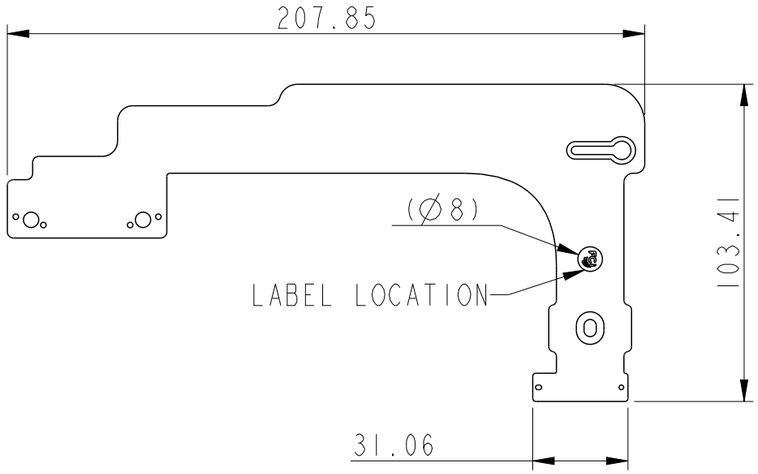


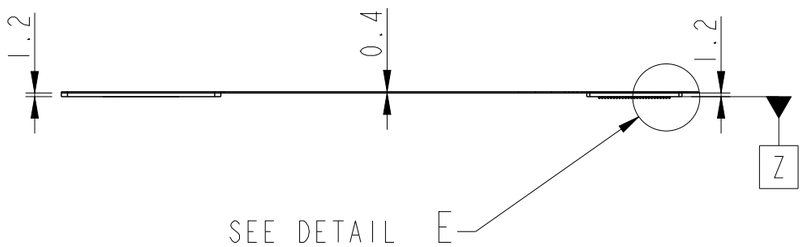


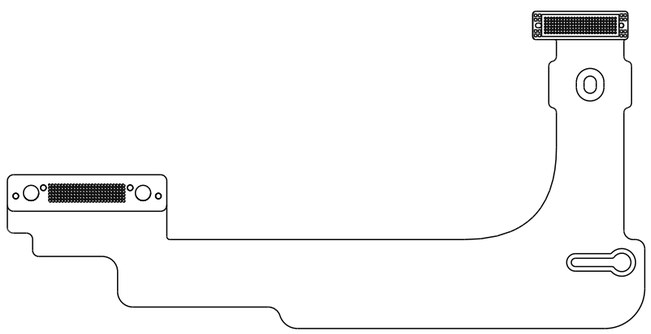

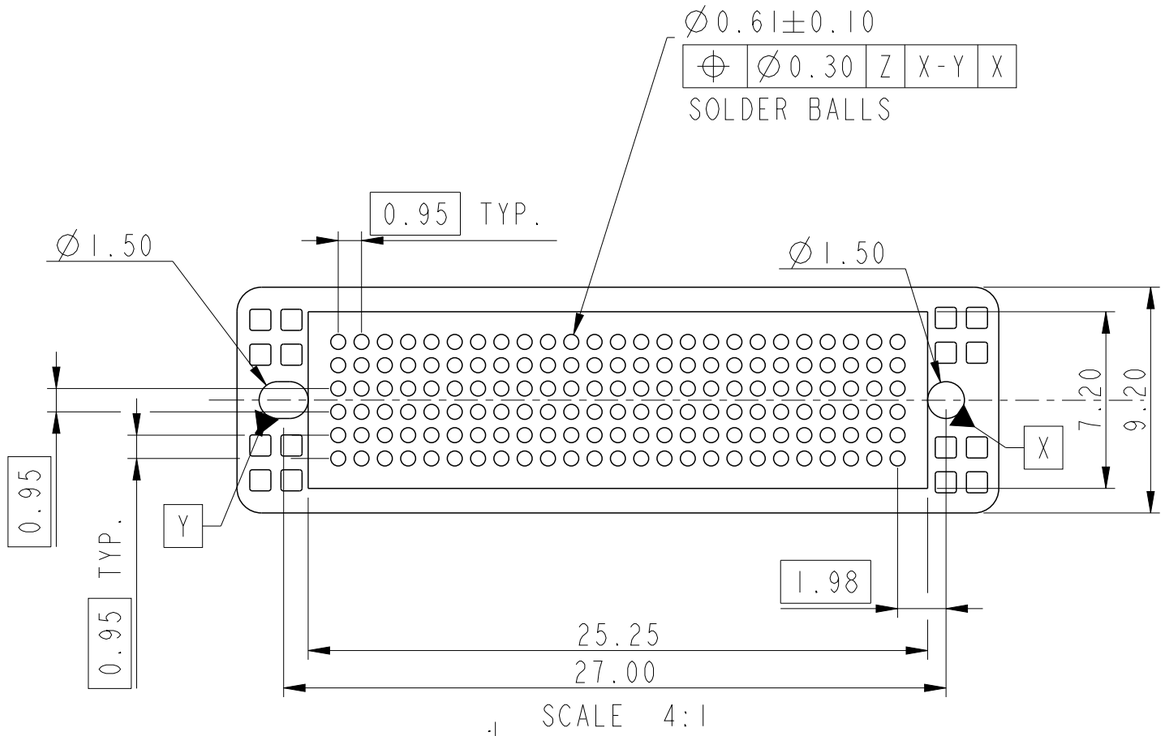


SCALE 4:1

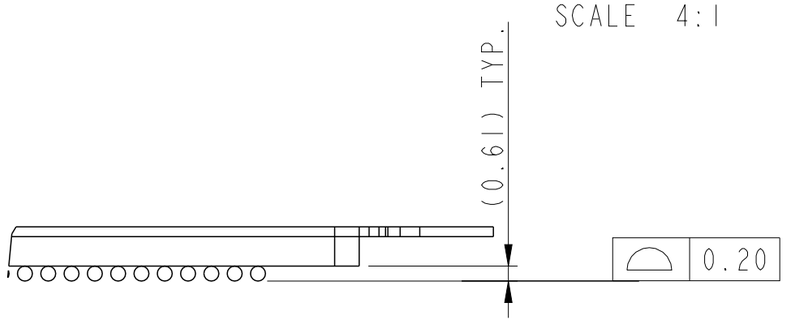


DETAIL E
SCALE 4:1

| | | | | | | | | |
|---|---|---|---|---|---|---|---|---|
| spec ref - | | | dr | Zhen Luo | 2016/08/18 | projection | MM | size A3 / scale 1:2 |
| tolerance std ASME Y14.5 | TOLERANCES UNLESS OTHERWISE SPECIFIED | | eng | Michael Song | 2016/12/07 | | | |
| | | | chr | Heaven Cen | 2016/12/07 | | | ecn no ELX-DG-25561-1 |
| | | | appr | Pei-Ming Zheng | 2016/12/07 | product family - | | rel level Released |
| surface ✓ | linear | 0.X | ±0.30 | Amphenol FCi | title Flex Cable BGA Assembly Brawn | | dwg no 10129553 | rev B |
| | | 0.XX | ±0.20 | | | | | |
| | | 0.XXX | ±0.10 | | | | | |
| ASME Y14.5 | angular | 0° | ±2° | | cat. no. - | Product - Customer Drw | | sheet 10 of 11 |

© 2016 AFCI

Creo File - REV E - 2016-02-12

PRODUCT PART NUMBER

10129553-□□□□□XXLF

BASE NUMBER

LEAD FREE

PCB DESIGN:
0: STANDARD
1 TO N: NEW STACKUP

SUPPLIER:
M:Multex
T:TTM
W:WuZhu

CODE (SEE TABLE)

| CODE | Flex Cable code In Wistron |
|---|---|
| 14430 | 14430 |
| 14426 | 14426 |
| 14425 | 14425 |
| 14423 | 14423 |
| 14424 | 14424 |
| 14428 | 14428 |
| 14429 | 14429 |
| 14460 | 14460 |
| 14461 | 14461 |
| 14531 | 14531 |

NOTES:

1. MATERIAL:
   FLEX CABLE
   SOLDER BALL: LEAD FREE 96.5Sn/3Ag/0.5Cu
   VENDOR: ALPHA
2. SOLDER BALLS WILL NOT BE PERFECT SHPERICAL SHAPE DUE TO REFLOW ATTACHMENT.
3. PRODUCT SPECIFICATION: GS-12-1183.
4. APPLICATION SPECIFICATION: GS-20-0391.
5. PACKAGE SPECIFICATION: GS-14-2365.
6. PRODUCT MEET EUROPEAN UNION DIRECTIVES AND OTHER COUNTRY REGULATIONS DESCRIBED IN GS-22-08.
7. RATED VOLTAGE L80V-LESS THAN 80V
8. SHEAR FORCE OF SOLDER BALL:800GF MIN.
9. APPEARANCE STANDARD FOLLOWS IPC 6013 CLASS2 CRITERIA AND DELL PCB 10207.
10. MSL LEVEL:MULTEK:5 TTM:5A.
11. CONTACT RESISTANCE:
    MULTEK:10 OHM TTM:10 OHM
12. INSULATION RESISTANCE:
    MULTEK:10 MEGAOHM TTM:10 MEGAOHM
13. PCB WARPAGE CRITERIA:
    0.7% OF PCB LENGTH MAX.(BEFORE REFLOW)
14. IMPEDANCE REQUIREMENT.

| | | |
|---|---|---|
| 100 +/-10 OHMS RISE TIME=70PS (20% TO 80%) | 85 +/-10 OHMS RISE TIME=70PS (20% TO 80%) | 50 +/-5 OHMS RISE TIME=100PS (10% TO 90%) |
| SAS AND PCIE PAD (DIFFERENTIAL PAIR) | SATA PAD (DIFFERENTIAL PAIR) | SIDE BAND PAD (POWER,GND,SIDE BAND SIGNALS) |

15. DIMENSION WITH THE "( )" SYMBOL IS THE REFERENCE DIMENSION.

| | | | | | |
|---|---|---|---|---|---|
| spec ref | - | dr | Zhen Luo | 2016/08/18 | projection |
| tolerance std ASME Y14.5 | TOLERANCES UNLESS OTHERWISE SPECIFIED | eng | Michael Song | 2016/12/07 | MM |
| | | chr | Heaven Cen | 2016/12/07 | |
| | | appr | Pei-Ming Zheng | 2016/12/07 | product family - |

| | | | |
|---|---|---|---|
| size | A3 | scale | 1:1 |
| ecn no | ELX-DG-25561-1 | | |
| rel level | Released | | |

| | | | |
|---|---|---|---|
| surface ASME Y14.5 | linear | 0.X | ±0.30 |
| | | 0.XX | ±0.20 |
| | | 0.XXX | ±0.10 |
| | angular | 0° | ±2° |

Amphenol FCi

title: Flex Cable BGA Assembly
Brawn

dwg no: 10129553

rev: B

cat. no. - | Product - Customer Drw | sheet 11 of 11

© 2016 AFCI

Общество с ограниченной ответственностью «МосЧип» ИНН 7719860671 / КПП 771901001
Адрес: 105318, г.Москва, ул.Щербаковская д.3, офис 1107

**Данный компонент на территории Российской Федерации**

**Вы можете приобрести в компании MosChip.**

Для оперативного оформления запроса Вам необходимо перейти по данной ссылке:

http://moschip.ru/get-element

Вы можете разместить у нас заказ для любого Вашего проекта, будь то серийное производство или разработка единичного прибора.

В нашем ассортименте представлены ведущие мировые производители активных и пассивных электронных компонентов.

Нашей специализацией является поставка электронной компонентной базы двойного назначения, продукции таких производителей как XILINX, Intel (ex.ALTERA), Vicor, Microchip, Texas Instruments, Analog Devices, Mini-Circuits, Amphenol, Glenair.

Сотрудничество с глобальными дистрибьюторами электронных компонентов, предоставляет возможность заказывать и получать с международных складов практически любой перечень компонентов в оптимальные для Вас сроки.

На всех этапах разработки и производства наши партнеры могут получить квалифицированную поддержку опытных инженеров.

Система менеджмента качества компании отвечает требованиям в соответствии с ГОСТ Р ИСО 9001, ГОСТ РВ 0015-002 и ЭС РД 009

**Офис по работе с юридическими лицами:**

105318, г.Москва, ул.Щербаковская д.3, офис 1107, 1118, ДЦ «Щербаковский»

Телефон: +7 495 668-12-70 (многоканальный)

Факс: +7 495 668-12-70 (доб.304)

E-mail: info@moschip.ru

Skype отдела продаж:
moschip.ru
moschip.ru_4
moschip.ru_6
moschip.ru_9