MCP1501

High-Precision Buffered Voltage Reference

Features

- Maximum Temperature Coefficient: 50 ppm/°C from –40°C to +125°C
- Initial Accuracy: 0.1%
- Operating Temperature Range: –40 to +125°C
- Low Typical Operating Current: 140 µA
- Line Regulation: 50 ppm/V Maximum
- Load Regulation: 40 ppm/mA Maximum
- 8 Voltage Variants Available:
  - 1.024V
  - 1.250V
  - 1.800V
  - 2.048V
  - 2.500V
  - 3.000V
  - 3.300V
  - 4.096V
- Output Noise: 27 µVRMS, 10 Hz to 10 kHz (1.024V)

Applications

- Precision Data Acquisition Systems
- High-Resolution Data Converters
- Medical Equipment Applications
- Industrial Controls
- Battery-Powered Devices

General Description

The MCP1501 is a buffered voltage reference capable of sinking and sourcing 20 mA of current. The voltage reference is a low-drift bandgap-based reference. The bandgap uses chopper-based amplifiers, effectively reducing the drift to zero.

The MCP1501 is available in the following packages:

- 6-Lead SOT-23
- 8-Lead SOIC
- 8-Lead 2 mm x 2 mm WDFN

Package Types

MCP1501
6-Lead SOT-23

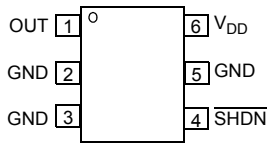

MCP1501
8-Lead SOIC

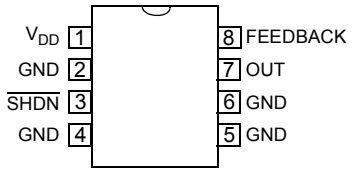

MCP1501
2x2 WDFN*

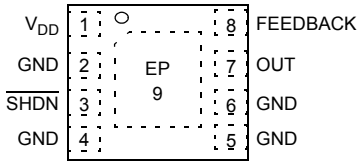

*Includes Exposed Thermal Pad (EP). See Table 3-1

© 2015-2017 Microchip Technology Inc.

BLOCK DIAGRAM

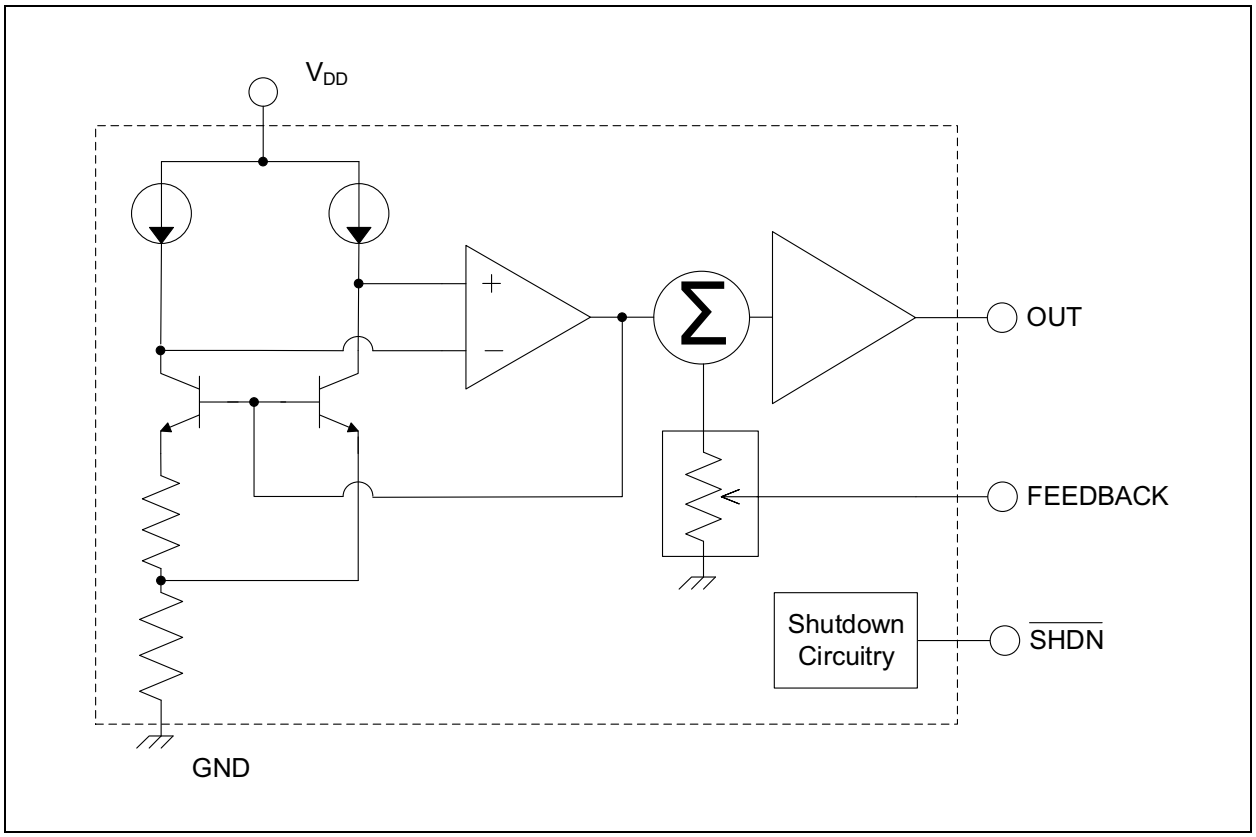

© 2015-2017 Microchip Technology Inc.

1.0 ELECTRICAL CHARACTERISTICS

Absolute Maximum Ratings(†)

V_{DD} 5.5V
Maximum current into V_{DD} pin ..... 30 mA
Clamp current, I_K (V_{PIN} < 0 or V_{PIN} > V_{DD}) ..... ±20 mA
Maximum output current sunk by OUTPUT pin ..... 30 mA
Maximum output current sourced by OUTPUT pin ..... 30 mA
(HBM:CDM:MM) ..... (2 kV:±1.5 kV:200V)

† **Notice**: Stresses above those listed under “Absolute Maximum Ratings” may cause permanent damage to the device. This is a stress rating only and functional operation of the device at those or any other conditions above those indicated in the operation listings of this specification is not implied. Exposure above maximum rating conditions for extended periods may affect device reliability.

TABLE 1-1: DC CHARACTERISTICS

Electrical Characteristics: Unless otherwise specified, $V_{DD(MIN)} \le V_{DD} \le 5.5V$ at –40°C ≤ T_A ≤ +125°C.							
Characteristic		**Sym.**	**Min.**	**Typ.**	**Max.**	**Units**	**Conditions**
Supply Voltage		V_{DD}	1.65	—	5.5	V	MCP1501-10
		V_{DD}	1.65	—	5.5	V	MCP1501-12
		V_{DD}	2.0	—	5.5	V	MCP1501-18
		V_{DD}	2.25	—	5.5	V	MCP1501-20
		V_{DD}	2.70	—	5.5	V	MCP1501-25
		V_{DD}	3.2	—	5.5	V	MCP1501-30
		V_{DD}	3.5	—	5.5	V	MCP1501-33
		V_{DD}	4.3	—	5.5	V	MCP1501-40
Power-on-Reset Release Voltage		V_{POR}	—	1.45	—	V	
Power-on-Reset Rearm Voltage		—	—	0.8	—	V	
Output Voltage	MCP1501-10	V_{OUT}	1.0230	1.0240	1.0250	V	
	MCP1501-12		1.2488	1.2500	1.2513	V	
	MCP1501-18		1.7982	1.800	1.8018	V	
	MCP1501-20		2.0460	2.0480	2.0500	V	
	MCP1501-25		2.4975	2.500	2.5025	V	
	MCP1501-30		2.9970	3.000	3.0030	V	
	MCP1501-33		3.2967	3.300	3.3033	V	
	MCP1501-40		4.0919	4.0960	4.1001	V	
Temperature Coefficient	MCP1501-XX	T_C	—	10	50	ppm/°C	
Line Regulation		ΔV_{OUT} / ΔV_{IN}	—	5	50	ppm/V	
Load Regulation		ΔV_{OUT} / ΔI_{OUT}	—	10 ppm – sink 15 ppm – source	40 ppm – sink 70 ppm – source	ppm/mA	–5 mA < I_{LOAD} < +5 mA
Dropout Voltage		V_{DO}	—	—	200	mV	–5 mA < I_{LOAD} < +2 mA
Power Supply Rejection Ratio		PSRR		94 dB			1.024V option, V_{IN} = 5.5V, 60 Hz at 100 mV_{P-P}

TABLE 1-1: DC CHARACTERISTICS (CONTINUED)

Electrical Characteristics: Unless otherwise specified, $V_{DD(MIN)} \le V_{DD} \le 5.5V$ at –40°C ≤ T_A ≤ +125°C.							
Characteristic		**Sym.**	**Min.**	**Typ.**	**Max.**	**Units**	**Conditions**
Shutdown		V_{IL}		1.35			V_{IN} = 5.5V
		V_{IH}		3.80			
Output Voltage Hysteresis		ΔV_{OUT_HYST}		300 µV			Refer to **Section 1.1.10 "Output Voltage Hysteresis"** for additional details on testing conditions.
Output Noise	MCP1501-10	e_N	—	14	—	µVRMS	0.1 Hz to 10 Hz, T_A = +25°C
			—	27	—		10 Hz to 10 kHz, T_A = +25°C
	MCP1501-40	e_N	—	20	—	µVRMS	0.1 Hz to 10 Hz, T_A = +25°C
			—	110	—		10 Hz to 10 kHz, T_A = +25°C
Maximum Load Current		I_{LOAD}	—	±20	—	mA	T_A = +25°C 2.048V option
Supply Current		I_{DD}	—	140	550	µA	No Load
			—	—	350		No Load, T_A = +25°C
Shutdown Current	MCP1501-10	I_{SHDN}		205		nA	T_A = +25°C
	MCP1501-20			185			
	MCP1501-40			185			

TABLE 1-2: TEMPERATURE SPECIFICATIONS

Electrical Specifications: Unless otherwise indicated, all parameters apply at AV_{DD}, DV_{DD} = 2.7 to 3.6V.						
Parameters	**Sym.**	**Min.**	**Typ.**	**Max.**	**Units**	**Conditions**
Temperature Ranges						
Operating Temperature Range	T_A	–40	—	+125	°C	
Storage Temperature Range	T_A	–65	—	+150	°C	
Thermal Package Resistance						
Thermal Resistance for SOT-23-6	θ_{JA}	—	+190.5	—	°C/W	
Thermal Resistance for SOIC-8	θ_{JA}	—	+149.5	—	°C/W	
Thermal Resistance for DFN-8	θ_{JA}	—	+141.3	—	°C/W	

© 2015-2017 Microchip Technology Inc.

1.1 Terminology

1.1.1 OUTPUT VOLTAGE

Output voltage is the reference voltage that is available on the OUT pin.

1.1.2 INPUT VOLTAGE

The input voltage (V_{IN}) is the range of voltage that can be applied to the V_{DD} pin and still have the device produce the designated output voltage on the OUT pin.

1.1.3 TEMPERATURE COEFFICIENT (TC_{OUT})

The output temperature coefficient or voltage drift is a measure of how much the output voltage will vary from its initial value with changes in ambient temperature. The value specified in the electrical specifications is measured as shown in Equation 1-1.

EQUATION 1-1: TC_{OUTPUT} CALCULATION

$$TC_{OUT} = \frac{V_{OUT(MAX)} - V_{OUT(MIN)}}{\Delta T \times V_{OUT(NOM)}} \times 10^6 \; ppm/°C$$

Where:

$V_{OUT(MAX)}$	=	Maximum output voltage over the temperature range
$V_{OUT(MIN)}$	=	Minimum output voltage over the temperature range
$V_{OUT(NOM)}$	=	Average output voltage over the temperature range
ΔT	=	Temperature range over which the data was collected

1.1.4 DROPOUT VOLTAGE

The dropout voltage is defined as the voltage difference between V_{DD} and V_{OUT} under load. Equation 1-2 is used to calculate the dropout voltage.

EQUATION 1-2:

$$V_{DO} = V_{IN} - V_{OUT} \mid I_{OUT} = Constant$$

1.1.5 LINE REGULATION

An ideal voltage reference will maintain a constant output voltage regardless of any changes to the input voltage. However, when real devices are considered, a small error may be measured on the output when an input voltage change occurs.

Line regulation is defined as the change in output voltage (ΔV_{OUT}) as a function of a change in input voltage (ΔV_{IN}), and expressed as a percentage, as shown in Equation 1-3.

EQUATION 1-3:

$$\frac{\Delta V_{OUT}}{\Delta V_{IN}} \times 100\% = \%\ Line\ Regulation$$

Line regulation may also be expressed as %/V or in ppm/V, as shown in Equation 1-4 and Equation 1-5, respectively.

EQUATION 1-4:

$$\frac{\left(\frac{\Delta V_{OUT}}{V_{OUT(NOM)}}\right)}{\Delta V_{IN}} \times 100\% = \frac{\%}{V}\ Line\ Regulation$$

EQUATION 1-5:

$$\frac{\left(\frac{\Delta V_{OUT}}{V_{OUT(NOM)}}\right)}{\Delta V_{IN}} \times 10^6 = \frac{ppm}{V}\ Line\ Regulation$$

As an example, if the MCP1501-20 is implemented in a design and a 2 µV change in output voltage is measured from a 250 mV change on the input, then the error in percent, ppm, percent/volt, and ppm/volt, as shown in Equation 1-6 – Equation 1-9.

EQUATION 1-6:

$$\left(\frac{\Delta V_{OUT}}{\Delta V_{IN}} \times 100\%\right) \times \left(\frac{2\ \mu V}{250\ mV} \times 100\%\right) = .0008\%$$

EQUATION 1-7:

$$\left(\frac{\Delta V_{OUT}}{\Delta V_{IN}} \times 10^6\right) \times \left(\frac{2\ \mu V}{250\ mV} \times 10^6\right) = 8\ ppm$$

EQUATION 1-8:

$$\frac{\Delta V_{OUT}}{\Delta V_{IN}} \times 100\% = \left(\frac{\left(\frac{2\ \mu V}{2.048 V}\right)}{250\ mV}\right) \times 100\% = 0.000390625\ \frac{\%}{V}$$

EQUATION 1-9:

$$\frac{\Delta V_{OUT}}{\Delta V_{IN}} \times 10^6 = \left(\frac{\left(\frac{2\ \mu V}{2.048 V}\right)}{250\ mV}\right) \times 10^6 = 3.90625\ \frac{ppm}{V}$$

1.1.6 LOAD REGULATION

An ideal voltage reference will maintain the specified output voltage regardless of the load's current demand. However, real devices experience a small error voltage that deviates from the specified output voltage when a load is present.

Load regulation is defined as the voltage difference when under no load (V_{OUT} @ $I_{OUT|0}$) and under maximum load (V_{OUT} @ $I_{OUT|MAX}$), and is expressed as a percentage, as shown in Equation 1-10.

EQUATION 1-10:

$$\frac{V_{OUT}\ @\ I_{OUT|0} - V_{OUT}\ @\ I_{OUT|MAX}}{V_{OUT}\ @\ I_{OUT|0}} \times 100\% = \%\ Load\ Regulation$$

Similar to line regulation, load regulation may also be expressed as %/mA or in ppm/mA as shown in Equation 1-11 and Equation 1-12, respectively.

EQUATION 1-11:

$$\frac{\left(\frac{\Delta V_{OUT}}{V_{OUT(NOM)}}\right)}{\Delta I_{OUT}} \times 100\% = \frac{\%}{mA}\ Load\ Regulation$$

EQUATION 1-12:

$$\frac{\left(\frac{\Delta V_{OUT}}{V_{OUT(NOM)}}\right)}{\Delta I_{OUT}} \times 10^6 = \frac{ppm}{mA}\ Load\ Regulation$$

As an example, if the MCP1501-20 is implemented in a design and a 10 µV change in output voltage is measured from a 2 mA change on the input, then the error in percent, ppm, percent/volt, ppm/volt, as shown in Equation 1-13 – Equation 1-16.

EQUATION 1-13:

$$\frac{2.048V - 2.04799V}{2.04799V} \times 100\% = .0004882\%$$

EQUATION 1-14:

$$\frac{2.048V - 2.04799V}{2.04799V} \times 10^6 = \left(\frac{2.048V - 2.04799V}{2.04799V} \times 10^6\right) = 4.882\ ppm$$

EQUATION 1-15:

$$\frac{\left(\frac{\Delta V_{OUT}}{V_{OUT(NOM)}}\right)}{\Delta I_{OUT}} \times 100\% = \left(\frac{\left(\frac{10\ \mu V}{2.048V}\right)}{2\ mA}\right) \times 100\% = 0.2441\ \frac{\%}{mA}$$

EQUATION 1-16:

$$\frac{\left(\frac{\Delta V_{OUT}}{V_{OUT(NOM)}}\right)}{\Delta I_{OUT}} \times 10^6 = \left(\frac{\left(\frac{10\ \mu V}{2.048V}\right)}{2\ mA}\right) \times 10^6 = 2.441\ \frac{ppm}{mA}$$

© 2015-2017 Microchip Technology Inc.

1.1.7 INPUT CURRENT

The input current (operating current) is the current that sinks from V_{IN} to GND without a load current on the output pin. This current is affected by temperature, input voltage, output voltage, and the load current.

1.1.8 POWER SUPPLY REJECTION RATIO

Power supply rejection ratio (PSRR) is a measure of the change in output voltage (ΔV_{OUT}) relative to the change in input voltage (ΔV_{IN}) over frequency.

1.1.9 LONG-TERM DRIFT

The long-term output stability is measured by exposing the devices to an ambient temperature of +125°C, as shown in Figure 2-18 while configured in the circuit shown in Figure 1-1. In this test, all electrical specifications of the devices are measured periodically at +25°C.

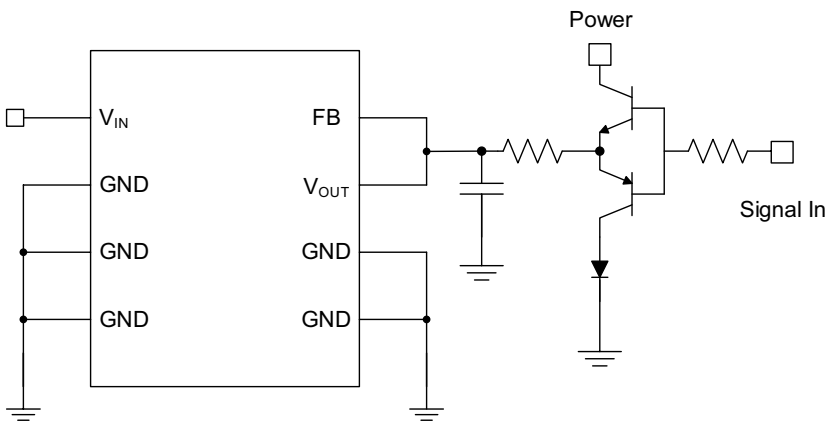

FIGURE 1-1: *Long-Term Drift Test Circuit.*

1.1.10 OUTPUT VOLTAGE HYSTERESIS

The output voltage hysteresis is a measure of the output voltage error after the powered devices are cycled over the entire operating temperature range. The amount of hysteresis can be quantified by measuring the change in the +25°C output voltage after temperature excursions from +25°C to +125°C to +25°C, and also from +25°C to –40°C to +25°C.

2.0 TYPICAL OPERATING CURVES

Note: The graphs and tables provided following this note are a statistical summary based on a limited number of samples and are provided for informational purposes only. The performance characteristics listed herein are not tested or guaranteed. In some graphs or tables, the data presented may be outside the specified operating range (e.g., outside specified power supply range) and therefore outside the warranted range.

Note: Unless otherwise specified, maximum values are: $V_{DD(MIN)} \leq V_{DD} \leq 5.5V$ at $-40°C \leq T_A \leq +125°C$.

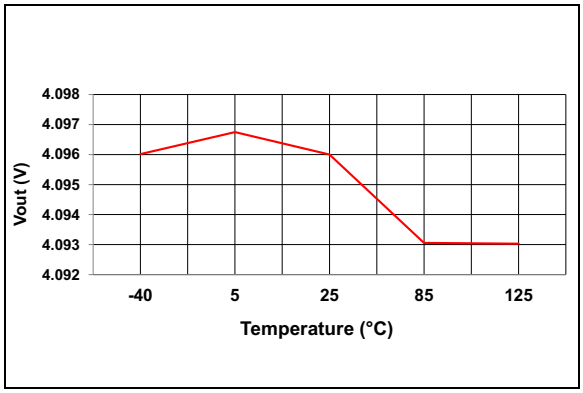

FIGURE 2-1: *V_{OUT} vs. Temperature, No Load, 4.096V Option.*

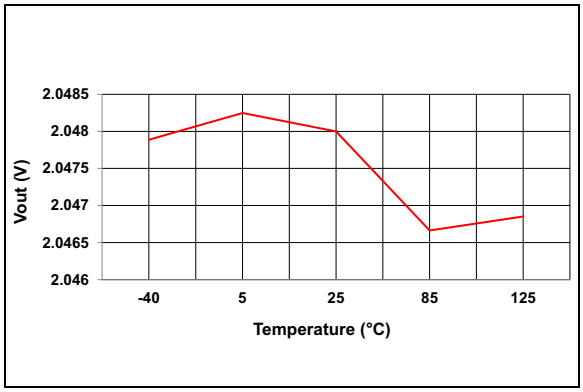

FIGURE 2-2: *V_{OUT} vs. Temperature, No Load, 2.048V Option.*

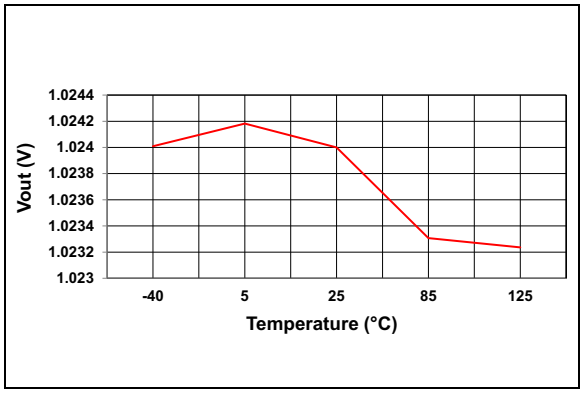

FIGURE 2-3: *V_{OUT} vs. Temperature, No Load, 1.024V Option.*

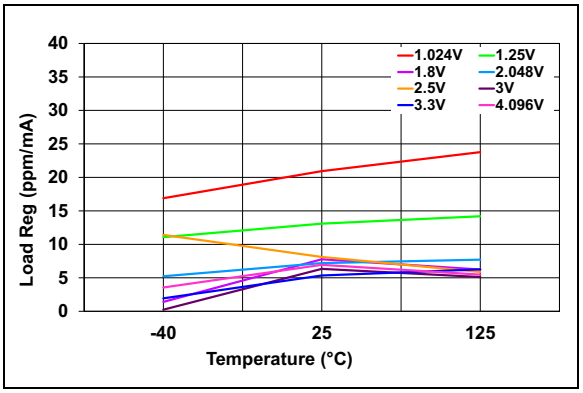

FIGURE 2-4: *Load Regulation vs. Temperature, I_{LOAD} 5mA Sink.*

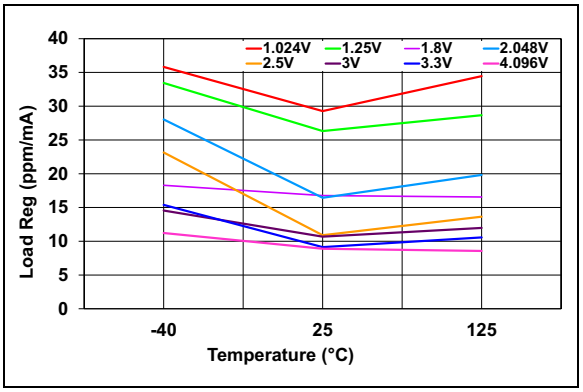

FIGURE 2-5: *Load Regulation vs. Temperature, I_{LOAD} 5mA Source.*

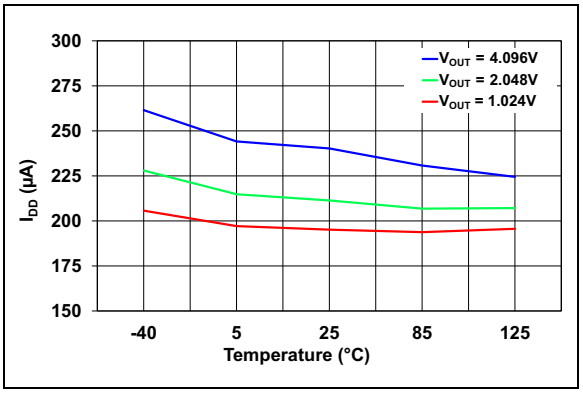

FIGURE 2-6: *I_{DD} vs. Temperature, All Options.*

© 2015-2017 Microchip Technology Inc.

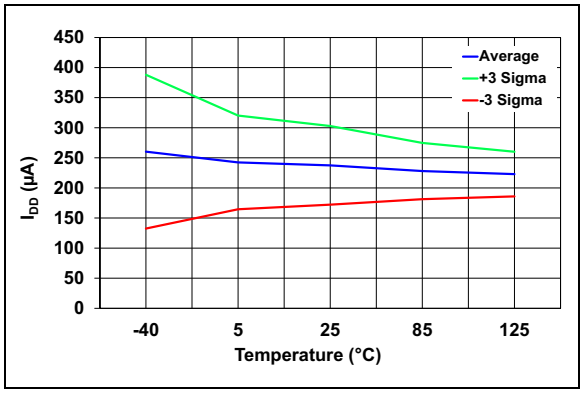

FIGURE 2-7: *I_{DD} vs. Temperature for V_{OUT}, 50 Units, No Load, 4.096V Option.*

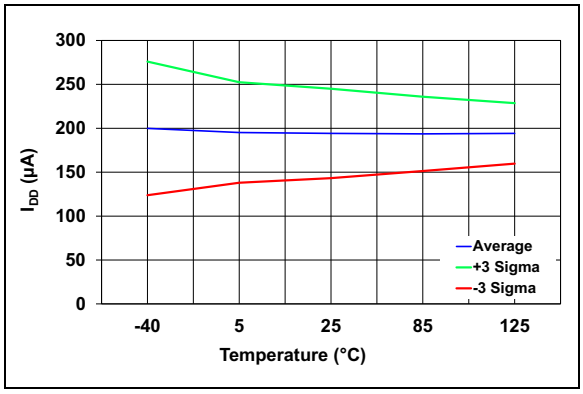

FIGURE 2-8: *I_{DD} vs. Temperature for V_{OUT}, 50 Units, No Load, 1.024V Option.*

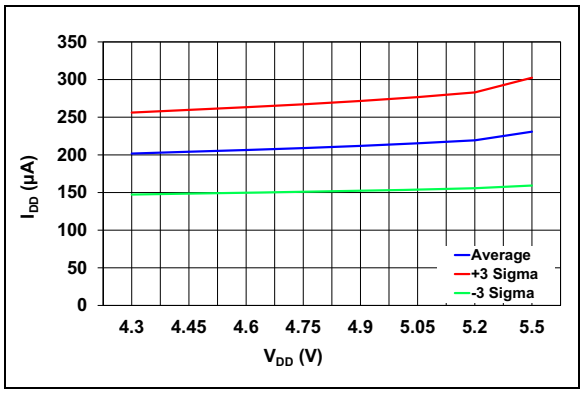

FIGURE 2-9: *I_{DD} vs. V_{DD}, V_{OUT} = 4.096V, 50 Units, No Load.*

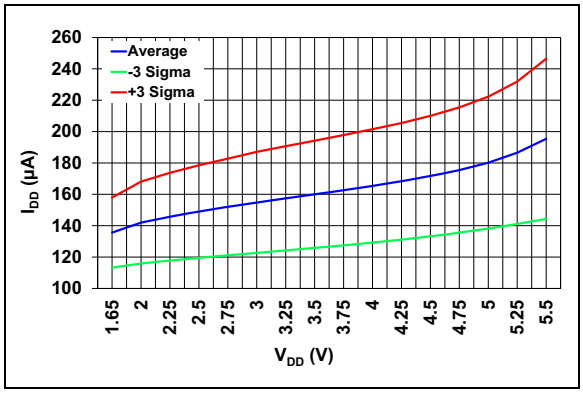

FIGURE 2-10: *I_{DD} vs. V_{DD}, V_{OUT} = 1.024V, 50 Units, No Load.*

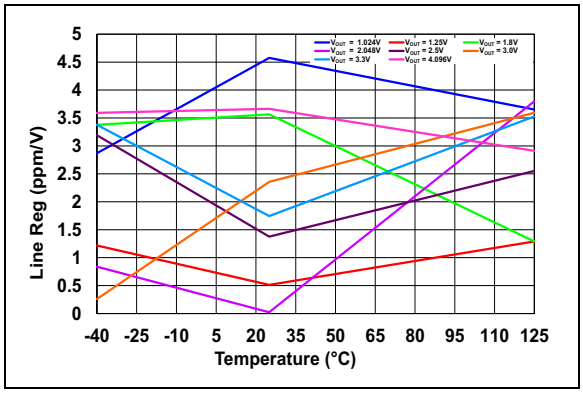

FIGURE 2-11: *Line Regulation vs. Temperature.*

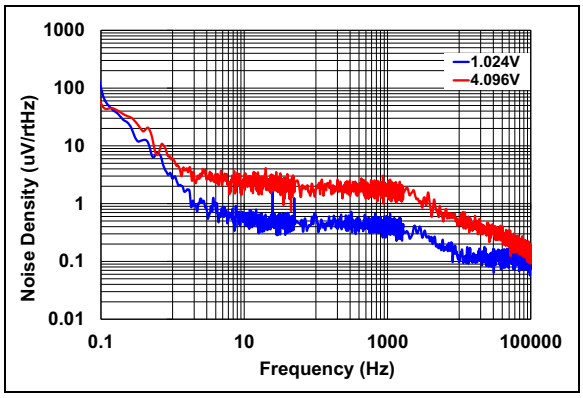

FIGURE 2-12: *Noise vs. Frequency, No Load, T_A = +25°C.*

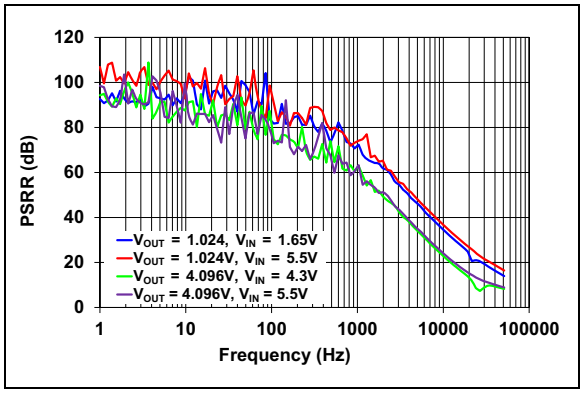

FIGURE 2-13: *PSRR vs. Frequency, No Load, T_A = +25°C.*

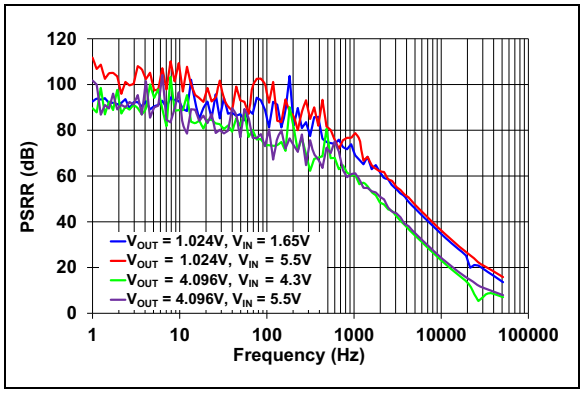

FIGURE 2-14: *PSRR vs. Frequency, 1 kΩ Load, T_A = +25°C.*

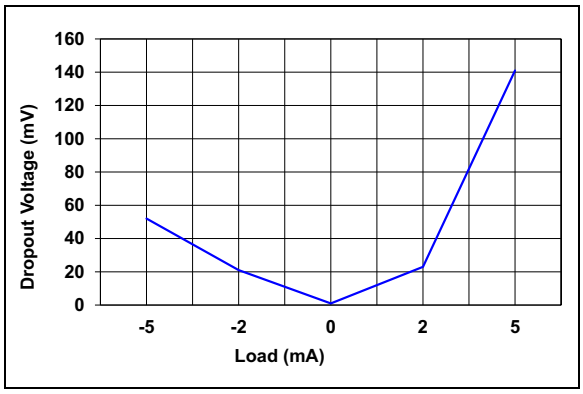

FIGURE 2-15: *Dropout Voltage vs. Load, T_A = +25°C, 2.048V Option.*

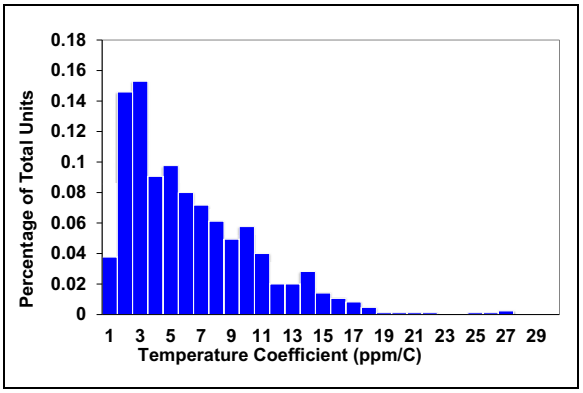

FIGURE 2-16: *Tempco Distribution, No Load, T_A = +25°C, V_{DD} = 2.7V, 50 Units.*

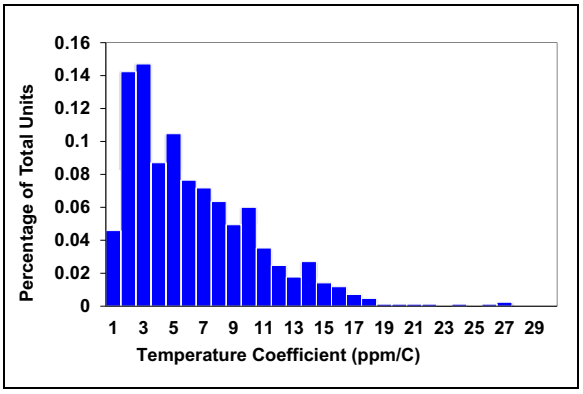

FIGURE 2-17: *Tempco Distribution, No Load, T_A = +25°C, V_{DD} = 5.5V, 50 Units.*

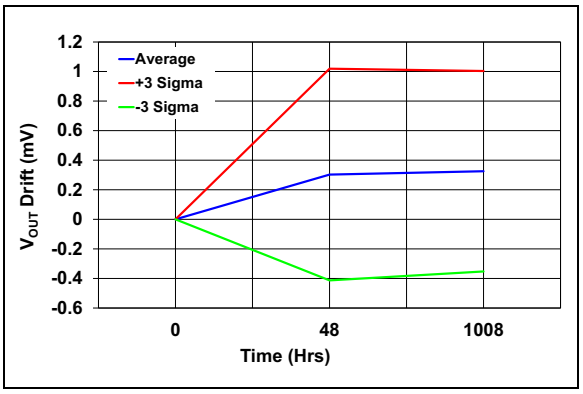

FIGURE 2-18: *V_{OUT} Drift vs. Time, T_A = +25°C, No Load, 800 Units.*

© 2015-2017 Microchip Technology Inc.

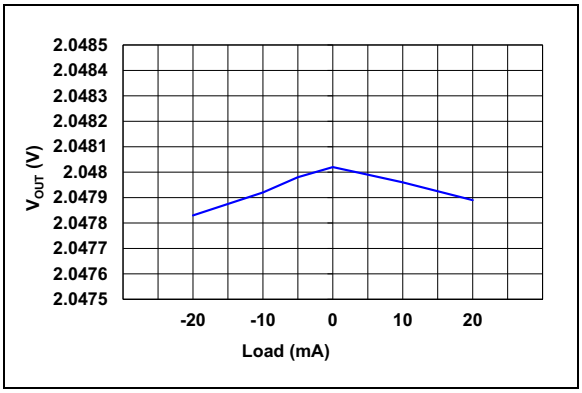

FIGURE 2-19: *V_{OUT} vs. Load, T_A = +25°C, 2.048V Option.*

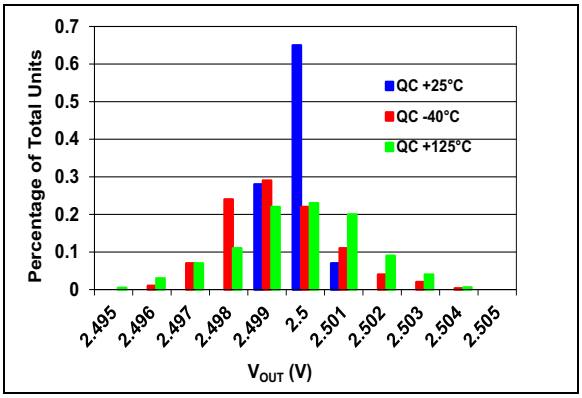

FIGURE 2-20: *V_{OUT} at V_{DDMIN}, V_{DD} = 2.7V, 800 Units, 2.5V Option, No Load.*

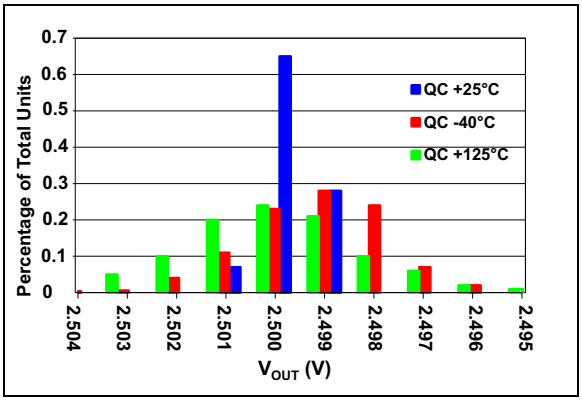

FIGURE 2-21: *V_{OUT} Distribution at V_{DDMAX}, V_{DD} = 5.5V, 800 Units, 2.5V Option, No Load.*

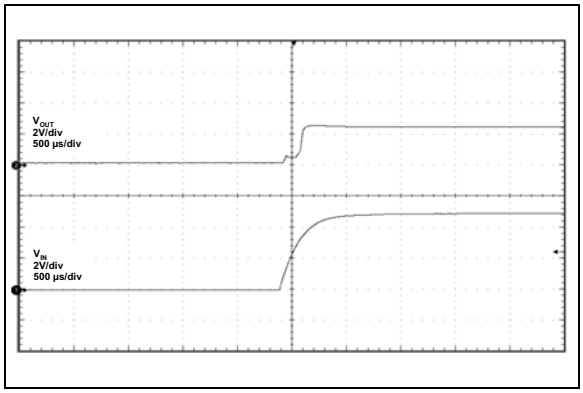

FIGURE 2-22: *Turn On Transient, V_{DD} = 5/5V, V_{IN} = 2.048V Option, No Load.*

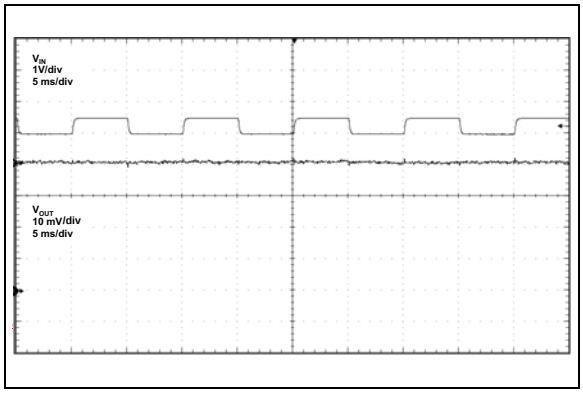

FIGURE 2-23: *Line Transient, V_{DD} = 5.5V, V_{IN} = 500 mV_{PP} @ 5V_{DC}, 2.048V Option, No Load.*

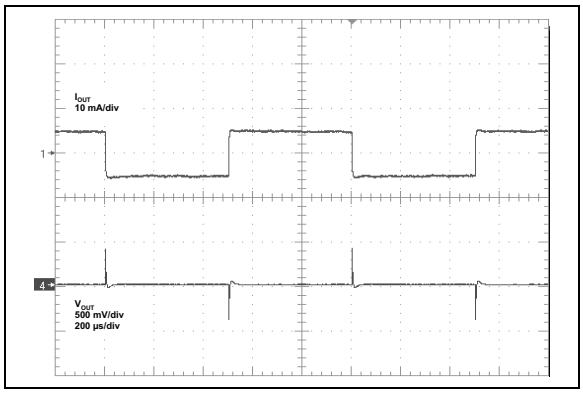

FIGURE 2-24: *Load Transient, V_{DD} = 5.5, V_{IN} = 2.5, 2.048V Option.*

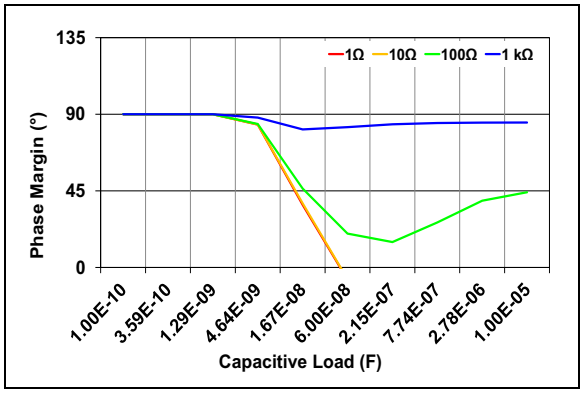

FIGURE 2-25: *R_{ISO} vs. C_{LOAD}, 4.096V Option Unloaded.*

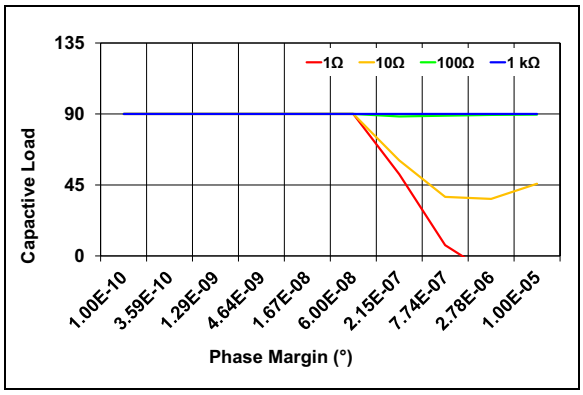

FIGURE 2-26: *R_{ISO} vs. C_{LOAD}, 4.096V Option Loaded.*

© 2015-2017 Microchip Technology Inc.

3.0 PIN FUNCTION TABLE

The pin functions are described in Table 3-1.

TABLE 3-1: PIN FUNCTION TABLE

SOT-23	SOIC	2 x 2 WDFN	Symbol	Function
1	7	7	OUT	Buffered V_{REF} Output
—	8	8	FEEDBACK	Buffered V_{REF} Feedback
2, 3, 5	2, 4, 5, 6	2, 4, 5, 6	GND	System Ground
4	3	3	$\overline{SHDN}$	Shutdown Pin Active Low
6	1	1	V_{DD}	Power Supply Input
—	—	9	EP	Exposed Thermal Pad

3.1 Buffered V_{REF} Output (OUT)

This is the Buffered Reference Output. On the WDFN and SOIC package, this should be connected to the FEEDBACK pin at the device. The output driver is tristated when in shutdown.

3.2 Buffered V_{REF} Feedback (FEEDBACK)

This is the buffer amplifier feedback pin. On the WDFN and SOIC package, this should be connected to the OUT pin at the device. This connection is internal on the SOT-23 package. Note that if there is routing impedance or IR-drop between the OUT and FEEDBACK pins, it is the FEEDBACK pin which accurately holds the output voltage. This can be used in an application to remove IR-drop effects on output voltage caused by the Printed Circuit Board (PCB) or interconnect resistance with a high-current load.

3.3 System Ground (GND)

This is the power supply return and should be connected to system ground.

3.4 Shutdown Pin ($\overline{SHDN}$)

This is a digital input that will place the device in Shutdown. The device should be allowed to power up before using this feature. This pin is active low.

3.5 Power Supply Input (V_{DD})

This power pin also serves as the input voltage for the voltage reference. Refer to the Electrical Tables to determine minimum voltage, based on the device.

3.6 Exposed Thermal Pad (EP)

Not internally connected, but recommend grounding.

4.0 THEORY OF OPERATION

The MCP1501 is a buffered voltage reference that is capable of operating over a wide input supply range while providing a stable output across the input supply range. The fundamental building block (see **Block Diagram**) of the MCP1501 is an internal bandgap reference circuit. As with all bandgap circuits, the internal reference sums together two voltages having an opposite temperature coefficient which allows a voltage reference that is practically independent from temperature.

The bandgap of the MCP1501 is based on a second order temperature coefficient (TC) compensated bandgap circuit that allows the MCP1501 to achieve high initial accuracy and low temperature coefficient operation across supply and ambient temperature. The bandgap curvature compensation is determined during device characterization and is trimmed for optimal accuracy.

The MCP1501 also includes a chopper-based amplifier architecture that ensures excellent low-noise operation, further reduces temperature dependent offsets that would otherwise increase the temperature coefficient of the MCP1501, and significantly improves long-term drift performance. Additional circuitry is included to eliminate the chopping frequency from the output of the device.

After the bandgap voltage is compensated, it is amplified, buffered, and provided to the output drive circuit which has excellent performance when sinking or sourcing load currents (±5 mA).

© 2015-2017 Microchip Technology Inc.

5.0 APPLICATION CIRCUITS

5.1 Application Tips

5.1.1 BASIC APPLICATION CIRCUIT

Figure 5-1 illustrates a basic circuit configuration of the MCP1501.

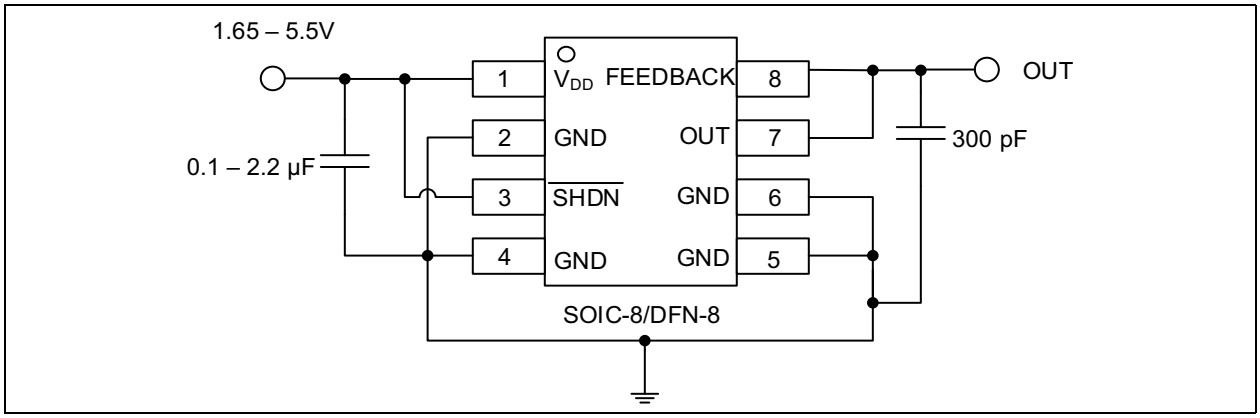

FIGURE 5-1: *Basic Circuit Configuration.*

An output capacitor is not required for stability of the voltage reference, but may be optionally added to provide noise filtering or act as a charge-reservoir for switching loads, e.g., successive approximation register (SAR) analog-to-digital converter (ADC). As shown, the input voltage is connected to the device at the V_{IN} input, with an optional 2.2 µf ceramic capacitor. This capacitor would be required if the input voltage has excessive noise. A 2.2 µf capacitor would reject input voltage noise at approximately 1 to 2 MHz. Noise below this frequency will be amply rejected by the input voltage rejection of the voltage reference. Noise at frequencies above 2 MHz will be beyond the bandwidth of the voltage reference and, consequently, not transmitted from the input pin through the device to the output.

If the noise at the output of these voltage references is too high for the particular application, it can be easily filtered with an external RC filter and op-amp buffer (see Figure 5-2).

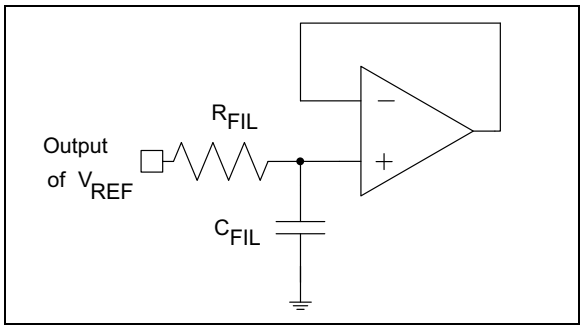

FIGURE 5-2: *Output Noise-Reducing Filter.*

The RC filter values are selected for a desired cutoff frequency, as shown in Equation 5-1.

EQUATION 5-1:

$$f_C = \frac{1}{2\pi(R_{FIL}C_{FIL})}$$

The values that are shown in Figure 5-2 (10 kΩ and 1 µF) will create a first-order, low-pass filter at the output of the amplifier. The cutoff frequency of this filter is 15.9 Hz, and the attenuation slope is 20 dB/decade. The MCP6021 amplifier isolates the loading of this low-pass filter from the remainder of the application circuit. This amplifier also provides additional drive, with a faster response time than the voltage reference.

5.1.2 LOAD CAPACITOR

The maximum capacitive load is 300 pF. However, larger capacitors may be implemented if a resistor is used in series with a larger load capacitor. Refer to Figure 2-25 and Figure 2-26 to ensure adequate phase margin when selecting a resistor/capacitor combination.

5.1.3 PRINTED CIRCUIT BOARD LAYOUT CONSIDERATIONS

Mechanical stress due to Printed Circuit Board (PCB) mounting can cause the output voltage to shift from its initial value. Devices in the SOT-23-6 package are generally more prone to assembly stress than devices in the WDFN package. To reduce stress-related output voltage shifts, mount the reference on low-stress areas of the PCB (i.e., away from PCB edges, screw holes and large components).

© 2015-2017 Microchip Technology Inc.

5.2 Typical Applications Circuits

5.2.1 NEGATIVE VOLTAGE REFERENCE

A negative voltage reference can be generated using any of the devices in the MCP1501 family. A typical application is shown in Figure 5-3. In this circuit, the voltage inversion is implemented using the MCP6061 and two equal resistors. The voltage at the output of the MCP1501 voltage reference drives R1, which is connected to the inverting input of the MCP6061 amplifier. Since the noninverting input of the amplifier is biased to ground, the inverting input will also be close to ground potential. The second 10 kΩ resistor is placed around the feedback loop of the amplifier. Since the inverting input of the amplifier is high-impedance, the current generated through R1 will also flow through R2. As a consequence, the output voltage of the amplifier is equal to –2.5V for the MCP1501-25 and –4.096V for the MCP1501-40.

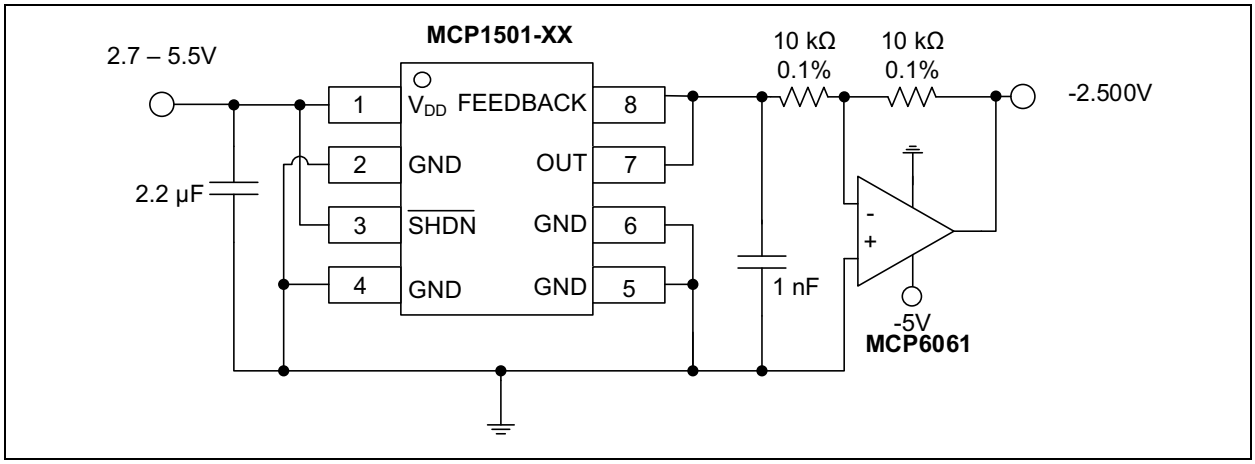

FIGURE 5-3: *Negative Voltage Reference.*

5.2.2 A/D CONVERTER REFERENCE

The MCP1501 product family was carefully designed to provide a precision, low noise voltage reference for the Microchip families of ADCs. The circuit shown in Figure 5-4 shows a MCP1501-25 configured to provide the reference to the MCP3201, a 12-bit ADC.

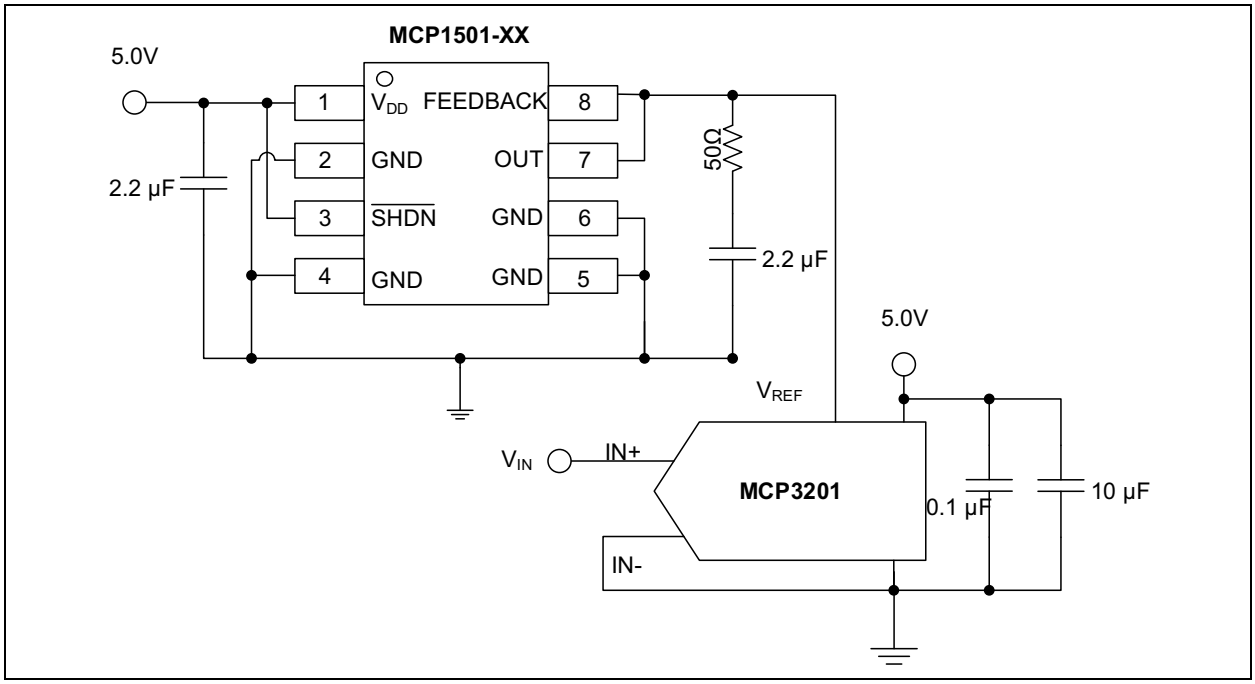

FIGURE 5-4: *ADC Example Circuit.*

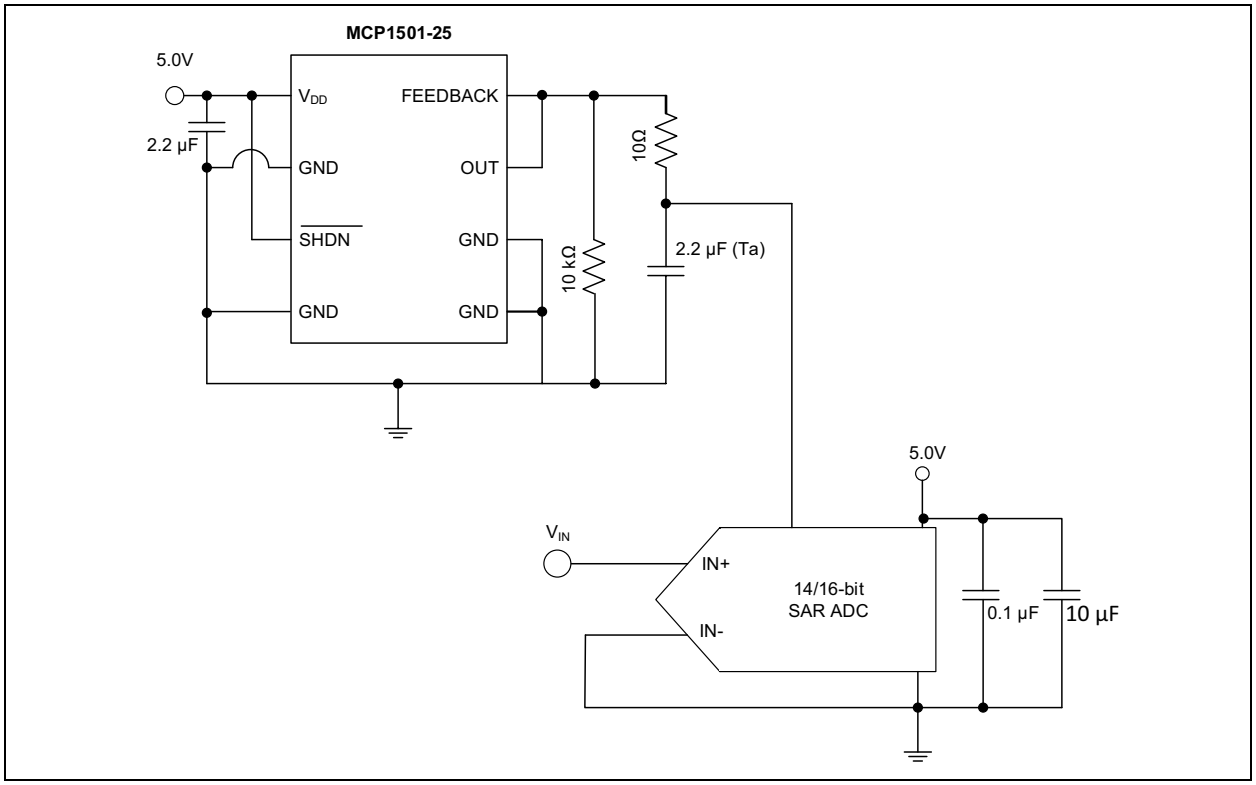

FIGURE 5-5: *SAR ADC Example Circuit.*

The circuit shown in Figure 5-5 shows a MCP1501-25 configured to provide the reference to a 14-bit or 16-bit SAR ADC.

© 2015-2017 Microchip Technology Inc.

6.0 PACKAGE INFORMATION

6.1 Package Markings

6-Lead SOT-23

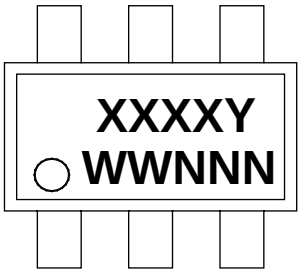

Device	Code
MCP1501T-10E/CHY	AABTY
MCP1501T-12E/CHY	AABUY
MCP1501T-18E/CHY	AABVY
MCP1501T-20E/CHY	AABWY
MCP1501T-25E/CHY	AABXY
MCP1501T-30E/CHY	AABYY
MCP1501T-33E/CHY	AABZY
MCP1501T-40E/CHY	AACAY

Example

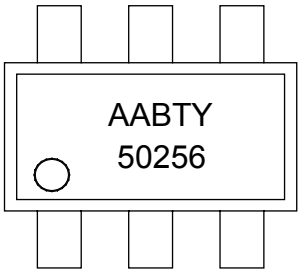

8-Lead SOIC

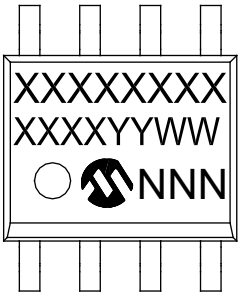

Device	Code
MCP1501T-10E/SN	150110
MCP1501T-12E/SN	150112
MCP1501-18E/SN	150118
MCP1501-20E/SN	150120
MCP1501T-25E/SN	150125
MCP1501T-30E/SN	150130
MCP1501T-33E/SN	150133
MCP1501T-40E/SN	150140

Example

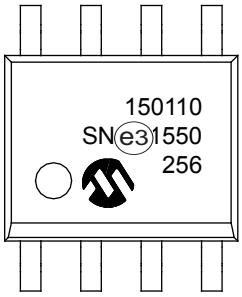

8-Lead WDFN (2 x2 mm)

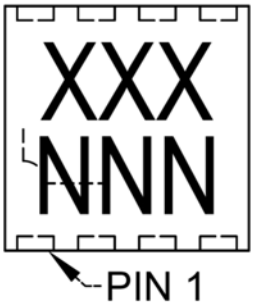

Device	Code
MCP1501T-10E/RW	AAQ
MCP1501T-12E/RW	AAR
MCP1501-18E/RW	AAS
MCP1501-20E/RW	AAT
MCP1501T-25E/RW	AAU
MCP1501T-30E/RW	AAV
MCP1501T-33E/RW	AAW
MCP1501T-40E/RW	AAX

Example

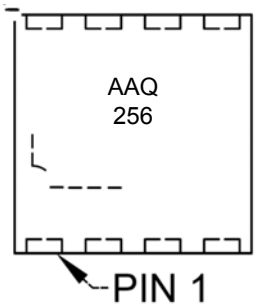

Legend:	XX...X	Customer-specific information
	Y	Year code (last digit of calendar year)
	YY	Year code (last 2 digits of calendar year)
	WW	Week code (week of January 1 is week '01')
	NNN	Alphanumeric traceability code
	e3	Pb-free JEDEC® designator for Matte Tin (Sn)
	*	This package is Pb-free. The Pb-free JEDEC designator (e3) can be found on the outer packaging for this package.

Note: In the event the full Microchip part number cannot be marked on one line, it will be carried over to the next line, thus limiting the number of available characters for customer-specific information.

6-Lead Plastic Small Outline Transistor (CH, CHY) [SOT-23]

Note: For the most current package drawings, please see the Microchip Packaging Specification located at http://www.microchip.com/packaging

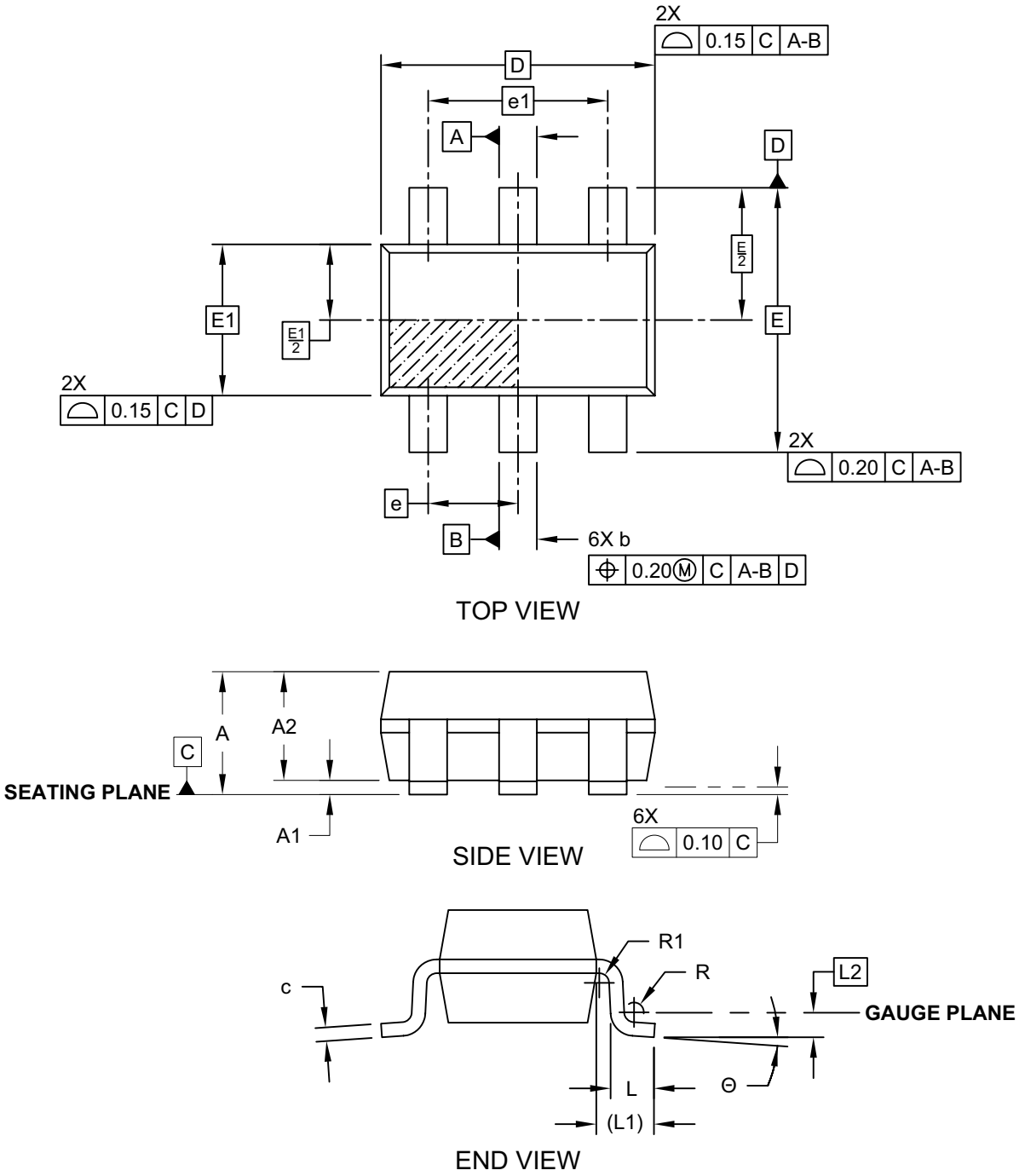

Microchip Technology Drawing C04-028C (CH) Sheet 1 of 2

© 2015-2017 Microchip Technology Inc.

6-Lead Plastic Small Outline Transistor (OT, OTY) [SOT-23]

Note: For the most current package drawings, please see the Microchip Packaging Specification located at http://www.microchip.com/packaging

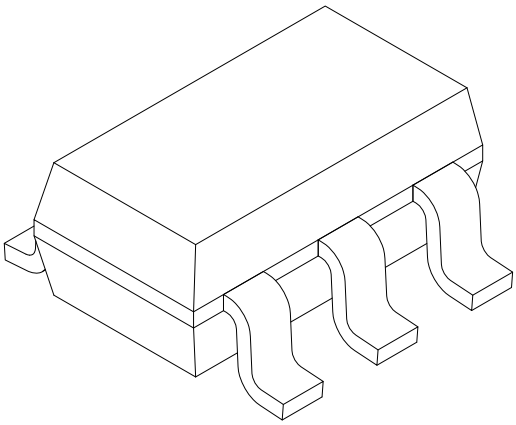

Units		MILLIMETERS		
Dimension Limits		MIN	NOM	MAX
Number of Leads	N	6		
Pitch	e	0.95 BSC		
Outside lead pitch	e1	1.90 BSC		
Overall Height	A	0.90	-	1.45
Molded Package Thickness	A2	0.89	1.15	1.30
Standoff	A1	0.00	-	0.15
Overall Width	E	2.80 BSC		
Molded Package Width	E1	1.60 BSC		
Overall Length	D	2.90 BSC		
Foot Length	L	0.30	0.45	0.60
Footprint	L1	0.60 REF		
Seating Plane to Gauge Plane	L1	0.25 BSC		
Foot Angle	ϕ	0°	-	10°
Lead Thickness	c	0.08	-	0.26
Lead Width	b	0.20	-	0.51

Notes:

1. Dimensions D and E1 do not include mold flash or protrusions. Mold flash or protrusions shall not exceed 0.25mm per side.
2. Dimensioning and tolerancing per ASME Y14.5M
   BSC: Basic Dimension. Theoretically exact value shown without tolerances.
   REF: Reference Dimension, usually without tolerance, for information purposes only.

Microchip Technology Drawing C04-028C (OT) Sheet 2 of 2

8-Lead Plastic Small Outline (SN) - Narrow, 3.90 mm (.150 In.) Body [SOIC]

Note: For the most current package drawings, please see the Microchip Packaging Specification located at http://www.microchip.com/packaging

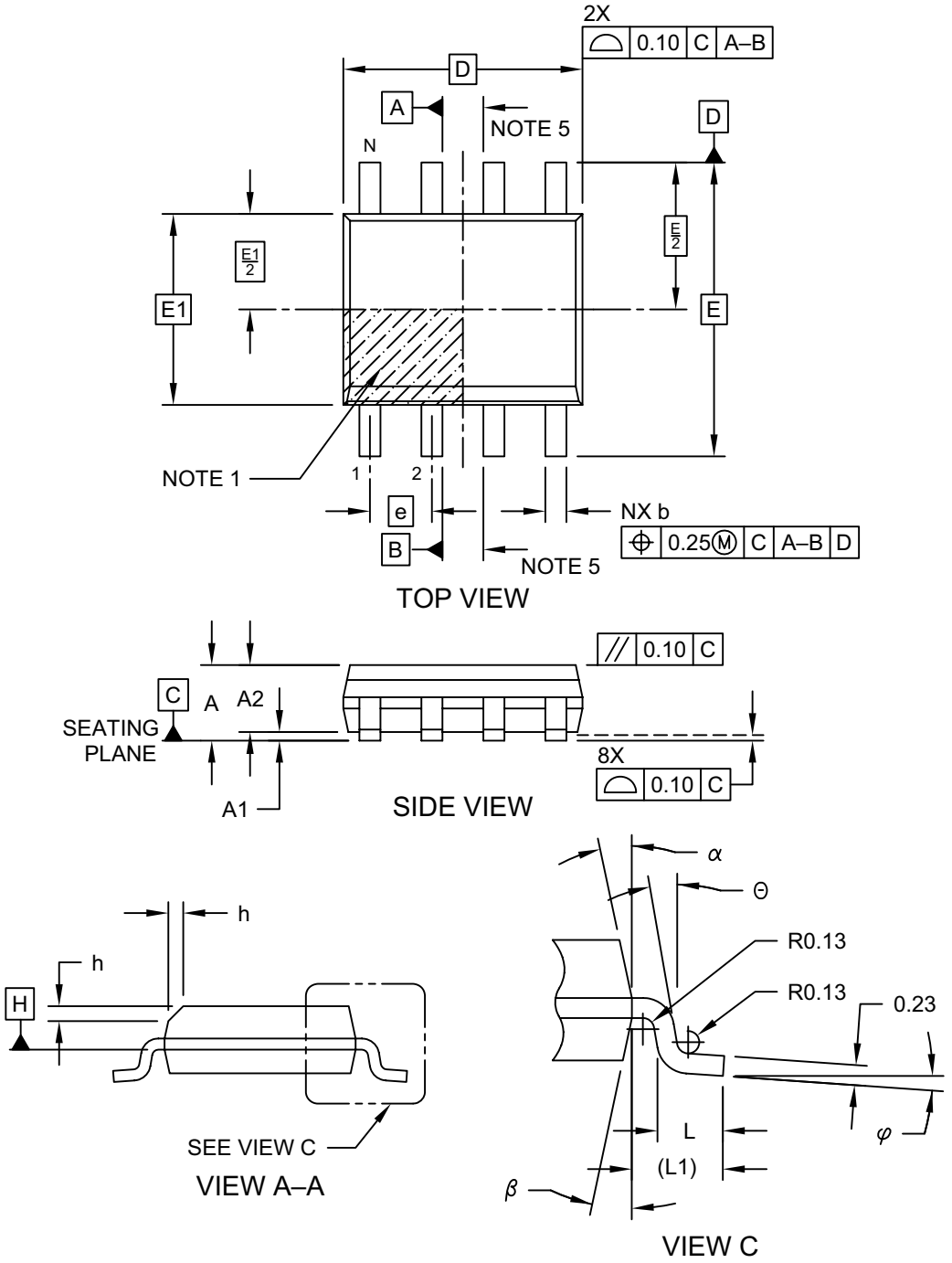

Microchip Technology Drawing No. C04-057-SN Rev D Sheet 1 of 2

© 2015-2017 Microchip Technology Inc.

8-Lead Plastic Small Outline (SN) - Narrow, 3.90 mm (.150 In.) Body [SOIC]

Note: For the most current package drawings, please see the Microchip Packaging Specification located at http://www.microchip.com/packaging

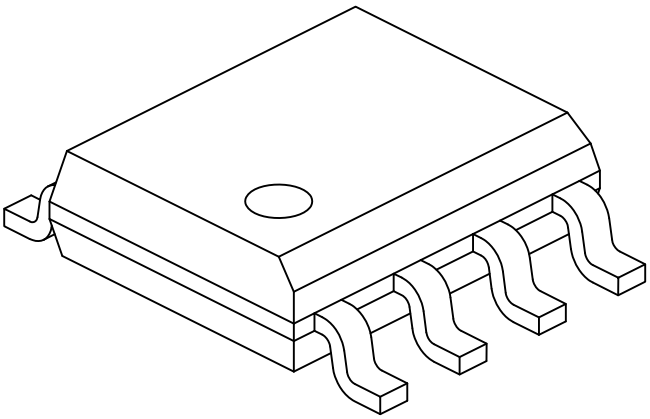

Units		MILLIMETERS		
Dimension Limits		MIN	NOM	MAX
Number of Pins	N	8		
Pitch	e	1.27 BSC		
Overall Height	A	-	-	1.75
Molded Package Thickness	A2	1.25	-	-
Standoff §	A1	0.10	-	0.25
Overall Width	E	6.00 BSC		
Molded Package Width	E1	3.90 BSC		
Overall Length	D	4.90 BSC		
Chamfer (Optional)	h	0.25	-	0.50
Foot Length	L	0.40	-	1.27
Footprint	L1	1.04 REF		
Foot Angle	φ	0°	-	8°
Lead Thickness	c	0.17	-	0.25
Lead Width	b	0.31	-	0.51
Mold Draft Angle Top	α	5°	-	15°
Mold Draft Angle Bottom	β	5°	-	15°

Notes:

1. Pin 1 visual index feature may vary, but must be located within the hatched area.
2. § Significant Characteristic
3. Dimensions D and E1 do not include mold flash or protrusions. Mold flash or protrusions shall not exceed 0.15mm per side.
4. Dimensioning and tolerancing per ASME Y14.5M
   BSC: Basic Dimension. Theoretically exact value shown without tolerances.
   REF: Reference Dimension, usually without tolerance, for information purposes only.
5. Datums A & B to be determined at Datum H.

Microchip Technology Drawing No. C04-057-SN Rev D Sheet 2 of 2

8-Lead Plastic Small Outline (SN) - Narrow, 3.90 mm Body [SOIC]

Note: For the most current package drawings, please see the Microchip Packaging Specification located at http://www.microchip.com/packaging

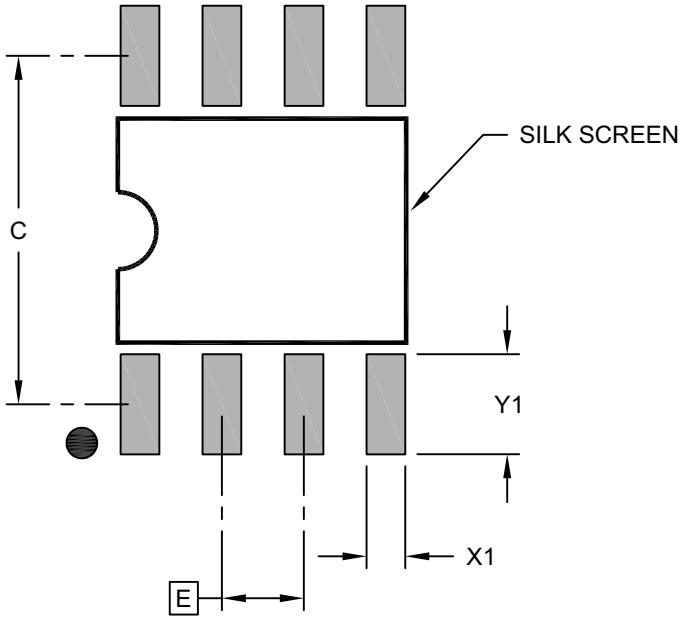

RECOMMENDED LAND PATTERN

Units		MILLIMETERS		
Dimension Limits		MIN	NOM	MAX
Contact Pitch	E	1.27 BSC		
Contact Pad Spacing	C		5.40	
Contact Pad Width (X8)	X1			0.60
Contact Pad Length (X8)	Y1			1.55

Notes:

1. Dimensioning and tolerancing per ASME Y14.5M
   BSC: Basic Dimension. Theoretically exact value shown without tolerances.

Microchip Technology Drawing C04-2057-SN Rev B

© 2015-2017 Microchip Technology Inc.

8-Lead Very, Very Thin Plastic Dual Flat, No Lead Package (RW) - 2x2 mm Body [WDFN]

Note: For the most current package drawings, please see the Microchip Packaging Specification located at http://www.microchip.com/packaging

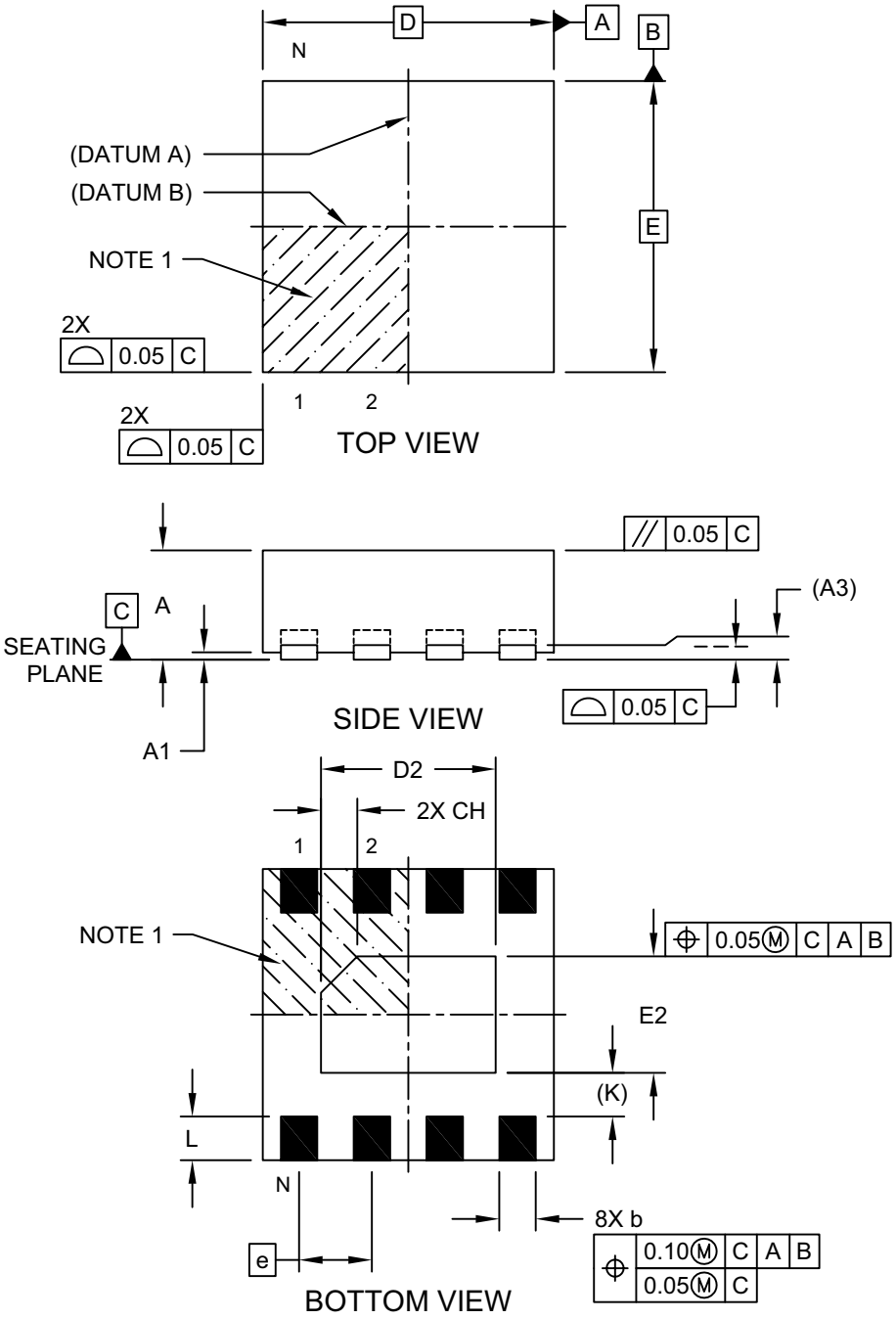

Microchip Technology Drawing C04-261A Sheet 1 of 2

8-Lead Very, Very Thin Plastic Dual Flat, No Lead Package (RW) - 2x2 mm Body [WDFN]

Note: For the most current package drawings, please see the Microchip Packaging Specification located at http://www.microchip.com/packaging

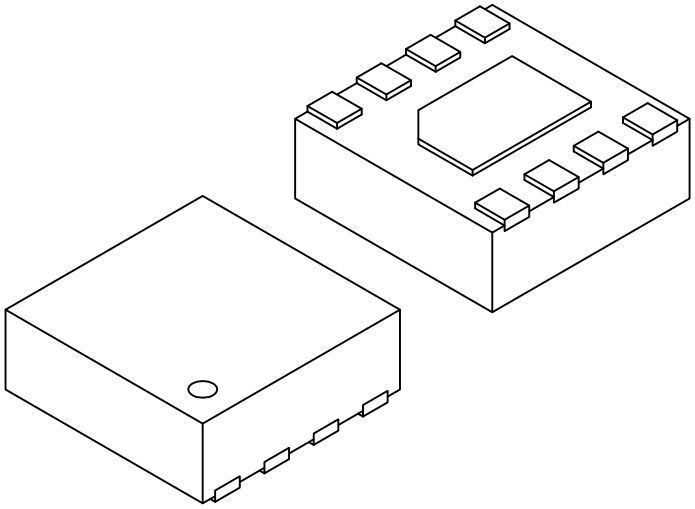

Units		MILLIMETERS		
Dimension Limits		MIN	NOM	MAX
Number of Terminals	N	8		
Pitch	e	0.50 BSC		
Overall Height	A	0.70	0.75	0.80
Standoff	A1	0.00	0.02	0.05
Terminal Thickness	(A3)	0.10 REF		
Overall Width	E	2.00 BSC		
Exposed Pad Width	E2	0.70	0.80	0.90
Overall Length	D	2.00 BSC		
Exposed Pad Length	D2	1.10	1.20	1.30
Exposed Pad Chamfer	CH	-	0.25	-
Terminal Width	b	0.20	0.25	0.30
Terminal Length	L	0.25	0.30	0.35
Terminal-to-Exposed-Pad	(K)	0.30	-	-

Notes:

1. Pin 1 visual index feature may vary, but must be located within the hatched area.
2. Package is saw singulated
3. Dimensioning and tolerancing per ASME Y14.5M

   BSC: Basic Dimension. Theoretically exact value shown without tolerances.

   REF: Reference Dimension, usually without tolerance, for information purposes only.

Microchip Technology Drawing C04-261A Sheet 2 of 2

© 2015-2017 Microchip Technology Inc.

8-Lead Very, Very Thin Plastic Dual Flat, No Lead Package (RW) - 2x2 mm Body [WDFN]

Note: For the most current package drawings, please see the Microchip Packaging Specification located at http://www.microchip.com/packaging

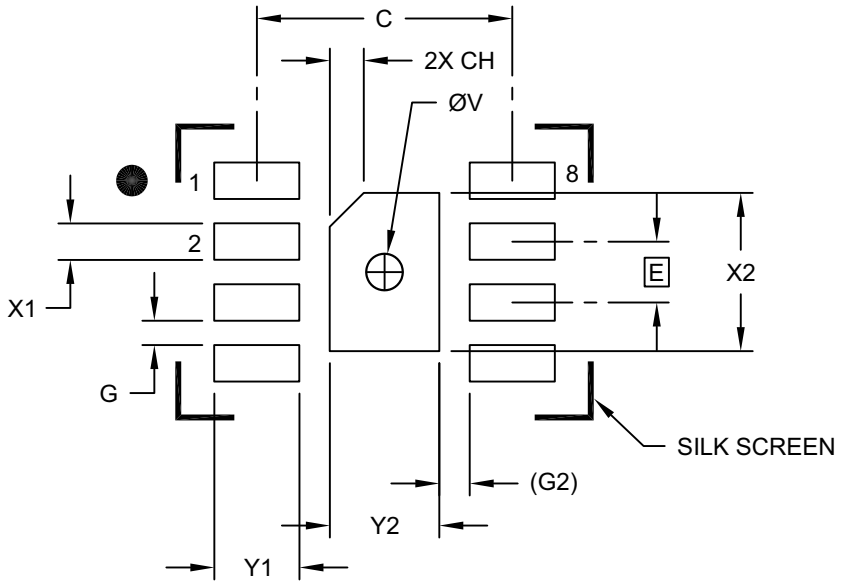

RECOMMENDED LAND PATTERN

Units		MILLIMETERS		
Dimension Limits		MIN	NOM	MAX
Contact Pitch	E		0.50 BSC	
Optional Center Pad Width	Y2			0.90
Optional Center Pad Length	X2			1.30
Contact Pad Spacing	C		2.10	
Center Pad Chamfer	CH		0.28	
Contact Pad Width (X8)	X1			0.30
Contact Pad Length (X8)	Y1			0.70
Contact Pad to Contact Pad (X6)	G1	0.20		
Contact Pad to Center Pad (X8)	G1		0.25 REF	
Thermal Via Diameter	V		0.30	

Notes:

1. Dimensioning and tolerancing per ASME Y14.5M

   BSC: Basic Dimension. Theoretically exact value shown without tolerances.

   REF: Reference Dimension, usually without tolerances, for reference only.

Microchip Technology Drawing C04-2261A

NOTES:

© 2015-2017 Microchip Technology Inc.

APPENDIX A: REVISION HISTORY

Revision E (August 2017)

The following is the list of modifications:

- Updated Features.
- Updated Package Types.
- Updated Section 1.0, Electrical Characteristics, Table 1-1.
- Updated Figure 2-12, Figure 2-20 and Figure 2-21.
- Updated Table 3-1.
- Updated Section 3.4, Shutdown Pin (SHDN).
- Updated Section 5.1.2, LOAD CAPACITOR.
- Corrected Figure 5-3 and Figure 5-4.
- Added Figure 5-5.
- Minor typographical corrections.

Revision D (March 2017)

The following is the list of modifications:

- Updated Table 1-1.
- Updated Equation 1-1, Equation 1-4, Equation 1-5, Equation 1-10, Equation 1-11, Equation 1-12 and Equation 1-16.
- Updated Figure 2-11, Figure 2-20, Figure 2-21, Figure 2-25 and Figure 2-26.
- Updated Figure 5-1 and Figure 5-4.
- Updated **"Product Identification System"** section.
- Minor typographical corrections.

Revision C (May 2016)

The following is the list of modifications:

- Updated Section 1.0, Electrical Characteristics, Section 4.0, Theory of Operation, Section 5.0, Application Circuits.
- Updated Features section, General Description section, Section 3.1, Buffered V_{REF} Output (OUT).
- Updated **"Product Identification System"** section.
- Updated Figure 2-12, Figure 2-20, Figure 2-21, Figure 5-1 and Figure 5-4.
- Updated Equation 1-10 and Equation 1-16.
- Minor typographical corrections.

Revision B (January 2016)

The following is the list of modifications:

- Updated Section 6.0, Package Information.
- Updated **"Product Identification System"** section.
- Minor typographical corrections.

Revision A (December 2015)

Original Release of this Document.

NOTES:

© 2015-2017 Microchip Technology Inc.

PRODUCT IDENTIFICATION SYSTEM

To order or obtain information, e.g., on pricing or delivery, refer to the factory or the listed sales office.

PART NO.-	[X](1)	X	/XX
Device	Tape and Reel	Output Voltage Option	Package

Device:	MCP1501 – 50 ppm maximum thermal drift buffered reference		
Tape and Reel Option:	Blank	=	Standard packaging (tube or tray)
	T	=	Tape and Reel (1)
Output Voltage Option:	10	=	1.024V
	12	=	1.200V
	18	=	1.800V
	20	=	2.048V
	25	=	2.500V
	30	=	3.000V
	33	=	3.300V
	40	=	4.096V
Package:	CHY*	=	6-Lead Plastic Small Outline Transistor (SOT-23)
	SN	=	8-Lead Plastic Small Outline – Narrow, 3.90 mm Body (SOIC)
	RW	=	8-Lead Very, Very Thin Plastic Dual Flat, No Lead Package – 2 x 2 mm Body (WDFN)
	*Y	=	Nickel palladium gold manufacturing designator. Only available on the SOT-23 package.

Examples:

a)	MCP1501T-10E/CHY:	1.024V, 6-lead SOT-23 package, Tape and Reel
b)	MCP1501-12E/SN:	1.2V, 8-lead SOIC package
c)	MCP1501T-18E/SN:	1.8V, 8-lead SOIC package, Tape and Reel
d)	MCP1501T-20E/RW:	2.048V, 8-lead WDFN package, Tape and Reel

Note 1: Tape and Reel identifier only appears in the catalog part number description. This identifier is used for ordering purposes and is not printed on the device package. Check with your Microchip sales office for package availability for the Tape and Reel option.

NOTES:

© 2015-2017 Microchip Technology Inc.

Note the following details of the code protection feature on Microchip devices:

- Microchip products meet the specification contained in their particular Microchip Data Sheet.
- Microchip believes that its family of products is one of the most secure families of its kind on the market today, when used in the intended manner and under normal conditions.
- There are dishonest and possibly illegal methods used to breach the code protection feature. All of these methods, to our knowledge, require using the Microchip products in a manner outside the operating specifications contained in Microchip's Data Sheets. Most likely, the person doing so is engaged in theft of intellectual property.
- Microchip is willing to work with the customer who is concerned about the integrity of their code.
- Neither Microchip nor any other semiconductor manufacturer can guarantee the security of their code. Code protection does not mean that we are guaranteeing the product as "unbreakable."

Code protection is constantly evolving. We at Microchip are committed to continuously improving the code protection features of our products. Attempts to break Microchip's code protection feature may be a violation of the Digital Millennium Copyright Act. If such acts allow unauthorized access to your software or other copyrighted work, you may have a right to sue for relief under that Act.

Information contained in this publication regarding device applications and the like is provided only for your convenience and may be superseded by updates. It is your responsibility to ensure that your application meets with your specifications. MICROCHIP MAKES NO REPRESENTATIONS OR WARRANTIES OF ANY KIND WHETHER EXPRESS OR IMPLIED, WRITTEN OR ORAL, STATUTORY OR OTHERWISE, RELATED TO THE INFORMATION, INCLUDING BUT NOT LIMITED TO ITS CONDITION, QUALITY, PERFORMANCE, MERCHANTABILITY OR FITNESS FOR PURPOSE**.** Microchip disclaims all liability arising from this information and its use. Use of Microchip devices in life support and/or safety applications is entirely at the buyer's risk, and the buyer agrees to defend, indemnify and hold harmless Microchip from any and all damages, claims, suits, or expenses resulting from such use. No licenses are conveyed, implicitly or otherwise, under any Microchip intellectual property rights unless otherwise stated.

Microchip received ISO/TS-16949:2009 certification for its worldwide headquarters, design and wafer fabrication facilities in Chandler and Tempe, Arizona; Gresham, Oregon and design centers in California and India. The Company's quality system processes and procedures are for its PIC® MCUs and dsPIC® DSCs, KEELOQ® code hopping devices, Serial EEPROMs, microperipherals, nonvolatile memory and analog products. In addition, Microchip's quality system for the design and manufacture of development systems is ISO 9001:2000 certified.

QUALITY MANAGEMENT SYSTEM
CERTIFIED BY DNV
═ ISO/TS 16949 ═

Trademarks

The Microchip name and logo, the Microchip logo, AnyRate, AVR, AVR logo, AVR Freaks, BeaconThings, BitCloud, CryptoMemory, CryptoRF, dsPIC, FlashFlex, flexPWR, Heldo, JukeBlox, KEELOQ, KEELOQ logo, Kleer, LANCheck, LINK MD, maXStylus, maXTouch, MediaLB, megaAVR, MOST, MOST logo, MPLAB, OptoLyzer, PIC, picoPower, PICSTART, PIC32 logo, Prochip Designer, QTouch, RightTouch, SAM-BA, SpyNIC, SST, SST Logo, SuperFlash, tinyAVR, UNI/O, and XMEGA are registered trademarks of Microchip Technology Incorporated in the U.S.A. and other countries.

ClockWorks, The Embedded Control Solutions Company, EtherSynch, Hyper Speed Control, HyperLight Load, IntelliMOS, mTouch, Precision Edge, and Quiet-Wire are registered trademarks of Microchip Technology Incorporated in the U.S.A.

Adjacent Key Suppression, AKS, Analog-for-the-Digital Age, Any Capacitor, AnyIn, AnyOut, BodyCom, chipKIT, chipKIT logo, CodeGuard, CryptoAuthentication, CryptoCompanion, CryptoController, dsPICDEM, dsPICDEM.net, Dynamic Average Matching, DAM, ECAN, EtherGREEN, In-Circuit Serial Programming, ICSP, Inter-Chip Connectivity, JitterBlocker, KleerNet, KleerNet logo, Mindi, MiWi, motorBench, MPASM, MPF, MPLAB Certified logo, MPLIB, MPLINK, MultiTRAK, NetDetach, Omniscient Code Generation, PICDEM, PICDEM.net, PICkit, PICtail, PureSilicon, QMatrix, RightTouch logo, REAL ICE, Ripple Blocker, SAM-ICE, Serial Quad I/O, SMART-I.S., SQI, SuperSwitcher, SuperSwitcher II, Total Endurance, TSHARC, USBCheck, VariSense, ViewSpan, WiperLock, Wireless DNA, and ZENA are trademarks of Microchip Technology Incorporated in the U.S.A. and other countries.

SQTP is a service mark of Microchip Technology Incorporated in the U.S.A.

Silicon Storage Technology is a registered trademark of Microchip Technology Inc. in other countries.

GestIC is a registered trademark of Microchip Technology Germany II GmbH & Co. KG, a subsidiary of Microchip Technology Inc., in other countries.

All other trademarks mentioned herein are property of their respective companies.

© 2015-2017, Microchip Technology Incorporated, All Rights Reserved.

ISBN: 978-1-5224-2100-9

Worldwide Sales and Service

AMERICAS

Corporate Office
2355 West Chandler Blvd.
Chandler, AZ 85224-6199
Tel: 480-792-7200
Fax: 480-792-7277
Technical Support:
http://www.microchip.com/support
Web Address:
www.microchip.com

Atlanta
Duluth, GA
Tel: 678-957-9614
Fax: 678-957-1455

Austin, TX
Tel: 512-257-3370

Boston
Westborough, MA
Tel: 774-760-0087
Fax: 774-760-0088

Chicago
Itasca, IL
Tel: 630-285-0071
Fax: 630-285-0075

Dallas
Addison, TX
Tel: 972-818-7423
Fax: 972-818-2924

Detroit
Novi, MI
Tel: 248-848-4000

Houston, TX
Tel: 281-894-5983

Indianapolis
Noblesville, IN
Tel: 317-773-8323
Fax: 317-773-5453
Tel: 317-536-2380

Los Angeles
Mission Viejo, CA
Tel: 949-462-9523
Fax: 949-462-9608
Tel: 951-273-7800

Raleigh, NC
Tel: 919-844-7510

New York, NY
Tel: 631-435-6000

San Jose, CA
Tel: 408-735-9110
Tel: 408-436-4270

Canada - Toronto
Tel: 905-695-1980
Fax: 905-695-2078

ASIA/PACIFIC

Asia Pacific Office
Suites 3707-14, 37th Floor
Tower 6, The Gateway
Harbour City, Kowloon

Hong Kong
Tel: 852-2943-5100
Fax: 852-2401-3431

Australia - Sydney
Tel: 61-2-9868-6733
Fax: 61-2-9868-6755

China - Beijing
Tel: 86-10-8569-7000
Fax: 86-10-8528-2104

China - Chengdu
Tel: 86-28-8665-5511
Fax: 86-28-8665-7889

China - Chongqing
Tel: 86-23-8980-9588
Fax: 86-23-8980-9500

China - Dongguan
Tel: 86-769-8702-9880

China - Guangzhou
Tel: 86-20-8755-8029

China - Hangzhou
Tel: 86-571-8792-8115
Fax: 86-571-8792-8116

China - Hong Kong SAR
Tel: 852-2943-5100
Fax: 852-2401-3431

China - Nanjing
Tel: 86-25-8473-2460
Fax: 86-25-8473-2470

China - Qingdao
Tel: 86-532-8502-7355
Fax: 86-532-8502-7205

China - Shanghai
Tel: 86-21-3326-8000
Fax: 86-21-3326-8021

China - Shenyang
Tel: 86-24-2334-2829
Fax: 86-24-2334-2393

China - Shenzhen
Tel: 86-755-8864-2200
Fax: 86-755-8203-1760

China - Wuhan
Tel: 86-27-5980-5300
Fax: 86-27-5980-5118

China - Xian
Tel: 86-29-8833-7252
Fax: 86-29-8833-7256

ASIA/PACIFIC

China - Xiamen
Tel: 86-592-2388138
Fax: 86-592-2388130

China - Zhuhai
Tel: 86-756-3210040
Fax: 86-756-3210049

India - Bangalore
Tel: 91-80-3090-4444
Fax: 91-80-3090-4123

India - New Delhi
Tel: 91-11-4160-8631
Fax: 91-11-4160-8632

India - Pune
Tel: 91-20-3019-1500

Japan - Osaka
Tel: 81-6-6152-7160
Fax: 81-6-6152-9310

Japan - Tokyo
Tel: 81-3-6880- 3770
Fax: 81-3-6880-3771

Korea - Daegu
Tel: 82-53-744-4301
Fax: 82-53-744-4302

Korea - Seoul
Tel: 82-2-554-7200
Fax: 82-2-558-5932 or
82-2-558-5934

Malaysia - Kuala Lumpur
Tel: 60-3-6201-9857
Fax: 60-3-6201-9859

Malaysia - Penang
Tel: 60-4-227-8870
Fax: 60-4-227-4068

Philippines - Manila
Tel: 63-2-634-9065
Fax: 63-2-634-9069

Singapore
Tel: 65-6334-8870
Fax: 65-6334-8850

Taiwan - Hsin Chu
Tel: 886-3-5778-366
Fax: 886-3-5770-955

Taiwan - Kaohsiung
Tel: 886-7-213-7830

Taiwan - Taipei
Tel: 886-2-2508-8600
Fax: 886-2-2508-0102

Thailand - Bangkok
Tel: 66-2-694-1351
Fax: 66-2-694-1350

EUROPE

Austria - Wels
Tel: 43-7242-2244-39
Fax: 43-7242-2244-393

Denmark - Copenhagen
Tel: 45-4450-2828
Fax: 45-4485-2829

Finland - Espoo
Tel: 358-9-4520-820

France - Paris
Tel: 33-1-69-53-63-20
Fax: 33-1-69-30-90-79

France - Saint Cloud
Tel: 33-1-30-60-70-00

Germany - Garching
Tel: 49-8931-9700

Germany - Haan
Tel: 49-2129-3766400

Germany - Heilbronn
Tel: 49-7131-67-3636

Germany - Karlsruhe
Tel: 49-721-625370

Germany - Munich
Tel: 49-89-627-144-0
Fax: 49-89-627-144-44

Germany - Rosenheim
Tel: 49-8031-354-560

Israel - Ra'anana
Tel: 972-9-744-7705

Italy - Milan
Tel: 39-0331-742611
Fax: 39-0331-466781

Italy - Padova
Tel: 39-049-7625286

Netherlands - Drunen
Tel: 31-416-690399
Fax: 31-416-690340

Norway - Trondheim
Tel: 47-7289-7561

Poland - Warsaw
Tel: 48-22-3325737

Romania - Bucharest
Tel: 40-21-407-87-50

Spain - Madrid
Tel: 34-91-708-08-90
Fax: 34-91-708-08-91

Sweden - Gothenberg
Tel: 46-31-704-60-40

Sweden - Stockholm
Tel: 46-8-5090-4654

UK - Wokingham
Tel: 44-118-921-5800
Fax: 44-118-921-5820

© 2015-2017 Microchip Technology Inc.

Mouser Electronics

Authorized Distributor

Click to View Pricing, Inventory, Delivery & Lifecycle Information:

Microchip:

MCP1501-12E/SN MCP1501-33E/SN MCP1501T-12E/SN MCP1501-40E/SN MCP1501-10E/SN MCP1501T-33E/SN MCP1501T-18E/CH MCP1501T-40E/RW MCP1501T-10E/SN MCP1501T-18E/RW MCP1501T-20E/SN MCP1501T-40E/SN MCP1501-30E/SN MCP1501T-12E/RW MCP1501T-33E/CH MCP1501T-33E/RW MCP1501T-18E/SN MCP1501-25E/SN MCP1501T-10E/RW MCP1501T-25E/RW MCP1501T-40E/CH MCP1501T-20E/RW MCP1501-20E/SN MCP1501T-10E/CH MCP1501T-25E/CH MCP1501T-30E/SN MCP1501T-12E/CH MCP1501T-30E/CH MCP1501-18E/SN MCP1501T-20E/CH MCP1501T-25E/SN MCP1501T-30E/RW MCP1501T-33E/CHY MCP1501T-20E/CHY MCP1501T-25E/CHY MCP1501T-12E/CHY MCP1501T-30E/CHY MCP1501T-18E/CHY MCP1501T-40E/CHY MCP1501T-10E/CHY MCP1501T-18E/CHYVAO MCP1501T-20E/CHYVAO MCP1501T-25E/CHYVAO MCP1501T-30E/CHYVAO MCP1501T-33E/CHYVAO MCP1501T-40E/CHYVAO MCP1501T-10E/CHYVAO MCP1501T-12E/CHYVAO

Общество с ограниченной ответственностью «МосЧип» ИНН 7719860671 / КПП 771901001
Адрес: 105318, г.Москва, ул.Щербаковская д.3, офис 1107

Данный компонент на территории Российской Федерации

Вы можете приобрести в компании MosChip.

Для оперативного оформления запроса Вам необходимо перейти по данной ссылке:

http://moschip.ru/get-element

Вы можете разместить у нас заказ для любого Вашего проекта, будь то серийное производство или разработка единичного прибора.

В нашем ассортименте представлены ведущие мировые производители активных и пассивных электронных компонентов.

Нашей специализацией является поставка электронной компонентной базы двойного назначения, продукции таких производителей как XILINX, Intel (ex.ALTERA), Vicor, Microchip, Texas Instruments, Analog Devices, Mini-Circuits, Amphenol, Glenair.

Сотрудничество с глобальными дистрибьюторами электронных компонентов, предоставляет возможность заказывать и получать с международных складов практически любой перечень компонентов в оптимальные для Вас сроки.

На всех этапах разработки и производства наши партнеры могут получить квалифицированную поддержку опытных инженеров.

Система менеджмента качества компании отвечает требованиям в соответствии с ГОСТ Р ИСО 9001, ГОСТ РВ 0015-002 и ЭС РД 009

Офис по работе с юридическими лицами:

105318, г.Москва, ул.Щербаковская д.3, офис 1107, 1118, ДЦ «Щербаковский»

Телефон: +7 495 668-12-70 (многоканальный)

Факс: +7 495 668-12-70 (доб.304)

E-mail: info@moschip.ru

Skype отдела продаж:
moschip.ru
moschip.ru_4
moschip.ru_6
moschip.ru_9