Amphenol®/Pyle® Industrial Connectors Star-Line®, Star-Line EX®, Star-Lok®

12-054-2

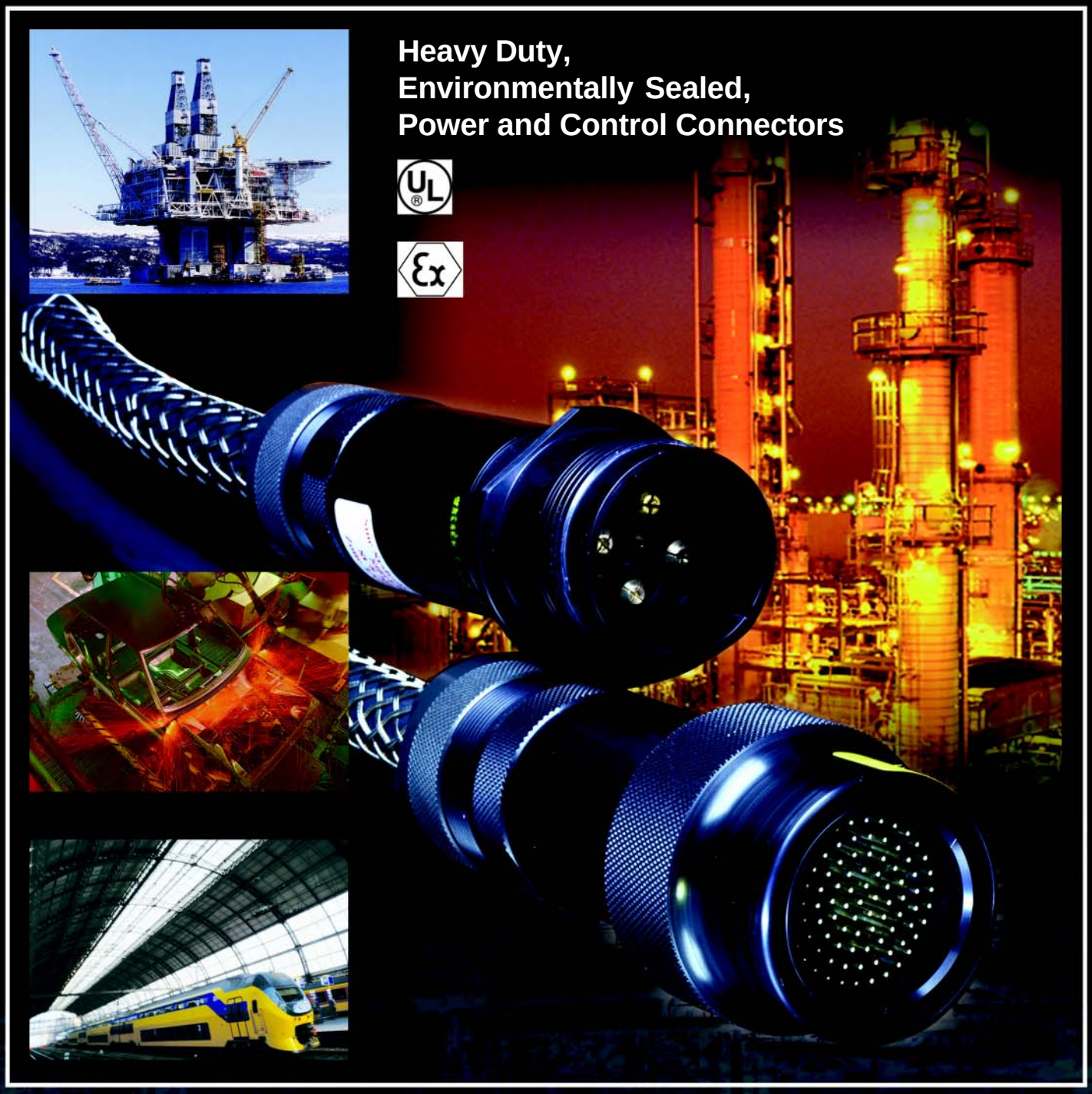

Amphenol

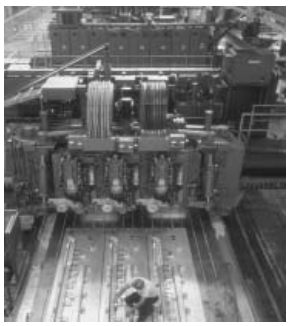

Contents

Star-Line® Series Overview 1

Star-Line EX® Series Overview 2

Star-Lok™ Series Overview 3

Environmental Highlights, Double Lead Acme Thread Features, Wire Limitation Guide 4

Contact Insert Features-Mod I, Mod II, Mod III ..... 5 - 6

Connector Component Ordering Details ..... 7 - 11

Plug Hardware Assemblies ..... 12 - 15

Receptacle Hardware Assemblies ..... 16 - 23

EX Ordering Details, EEx d Cable Types ..... 24 - 25

EX Hardware ..... 26 - 28

Insert Configuration Listing, Electrical Ratings ..... 29 - 30

Spare Replacement Contacts for MOD II and MOD III Inserts 31

Termination Data 32

Thermocouple Contacts 33

Insert Configuration Index ..... 34 - 36

Insert Configurations ..... 37 - 63

Connector Components, Spare Parts, Cable Adapters and Accessories ..... 64 - 71

Protection Covers and Caps Accessories ..... 72 - 73

Conduit System Accessories ..... 74 - 75

Crimping, Insertion and Removal Tools ..... 76 - 77

Single Pole Power Connectors ..... 78 - 79

Connector Assembly and Termination Instructions 80

Connectors with RADSOK® High Amperage Contacts and Other Amphenol®/Pyle® Connectors ..... 81 - 83

Sales Offices and Distributors Listing 84

Catalog information for reference only. For more assistance, contact your local Amphenol field sales office or:

Amphenol Industrial Operations
40-60 Delaware Avenue,
Sidney, NY 13838-1395
Phone: 607-563-5011 or 800-678-0141
Fax: 607-563-5157

This catalog and most all Amphenol catalogs are available for viewing, printing and downloading on websites:

www.amphenol-industrial.com
www.amphenol-aerospace.com

STAR-LINE® Series

Star-Line Series “ZP/ZR” connectors are heavy duty environmentally sealed plugs and receptacles and have been successfully used in all types of Industrial and Aerospace applications. These compact environmental connectors have provided outstanding performance in complex ground support cable networks, automatic and process control systems and instrumentation systems.

This family of connectors has made a major contribution to the successful interconnection of peak power generating systems as well as offshore petroleum production for power distribution and data acquisition.

Ample margins of safety and reliability have been designed into the Star-Line connectors to maintain capability levels which make them ideally suited for the broad spectrum of demands placed on them by industry.

The specific materials and design features incorporated in Star-Line connectors were originally selected to satisfy the stringent requirements of the Aerospace industry for heavy-duty connectors. These connectors combine electrical and mechanical capabilities that equal or exceed the performance parameters established by the Military Specification MIL-5015.

- **UL & CSA** listed to new 1682 requirements
- **ENVIRONMENTAL RESISTANCE** – Design and materials withstand the most challenging operating conditions. Series has an IP 67 rating.
- **SOLDER, CRIMP AND PRESSURE TERMINALS AVAILABLE**
- **EASILY ACCESSIBLE WIRE TERMINALS** – Conductors are readily terminated to contacts. Cable housings are slipped over conductors or leads after terminating. Cumbersome handling and seating of inserts with conductors attached is eliminated.
- **LARGE WIRING SPACE** – Ample wiring space is provided in cable housings and conduit fitting bodies. Hub of body mounts in any of four positions (except FS & FD box assemblies).
- **REVERSIBLE INSERTS** – A full range of contact inserts and application adapters are available. All are interchangeable and reversible to suit special needs.

** Star-line Series Connectors are certified to UL 1682 specifications.*

- **DOUBLE-LEAD THREAD COUPLING** – Modified Acme Thread does not clog under adverse conditions of ice, snow, sand or mud and provides the quick coupling feature.
- **HARD ANODIC COATING** – All machine, aluminum parts finished with a hard, scratch-resistant coating per MIL-A-8625, Type III. Dielectric strength 1800 volts. Heat resistance of 750° F.
- **HIGH TENSILE STRENGTH *ALUMINUM** – Bar Stock Components precision machined. Points of impact designed for extra strength.
- **RADSOK® HIGH AMPERAGE CONTACTS** – Special arrangements are available with RADSOK high amperage contacts. Standard Star-line inserts are not interchangeable with new RADSOK contact insert arrangements.
- **RoHS COMPLIANT PRODUCT AVAILABLE** – Consult Amphenol Industrial Operations.

STAR-LINE® EX Series

The Star-Line EX Series is a hybrid form of the parent Starline product line. The series is certified for use in a Zone 1-IIc hazardous environment. Classified facilities such as petrochemical refineries, land and offshore drilling systems are but a few of the applications for this broad product series.

Star-Line EX Series connectors are certified for use in Zone 1-IIc hazardous environmentt

- **ATEX CERTIFIED** – for Zone 1-IIc hazardous environment. Certificate number 03ATEX1101X.
- **CENELEC IP68-8 RATED** –
  Listed under EEx d IIc T6.
  Plugs and receptacles listed under EEx de IIc T6.
- **HARD ANODIC COATING** – All machined aluminum parts finished with a hard, scratch-resistant coating per MIL-A-8625, Type III. Dielectric strength 1800 volts. Heat resistance of 750° F.
- **SOLDER, CRIMP AND PRESSURE TERMINALS AVAILABLE**
- **REVERSIBLE INSERTS** – A full range of contact inserts for power, signal and mixed applications are available. All are interchangeable and reversible to suit specific needs.
- **EASILY ACCESSIBLE WIRE TERMINALS** – Conductors are readily terminated to contacts. Cable housings are slipped over conductors or leads after terminating. Cumbersome handling and seating of inserts with conductors attached is eliminated.
- **LARGE WIRING SPACE** – Ample wiring space is provided in cable housings and hardware.
- **HIGH TENSILE STRENGTH ALUMINUM** – Bar Stock Components precision machined. Points of impact designed for extra strength.
- **CABLE OPTIONS** – Starline EX Series can be terminated onto unarmored or armored and sheathed cables built to IEEE-45 / UL1309, IEC, BS, DIN and JIC standards. Flexible cables like SOOW-A, W, G-GC and DLO constructions can also be used with this Series.
- **EX CABLE GLANDS** – Wide variety of glands are available for Star-Line EX connectors. For more information ask for new Amphenol Cable Glands and Cord Grips catalog 12-055.

Star-Line EX Connector with EX gland (EX-13-3 style shown)

- **INSERT VARIETY** – A broad range of inserts are offered ranging from single-contact to 143 contacts.
  High amperage up to 1135 amps at 1000V / AC or DC. Contacts are high quality copper with silver plating. (Gold plating available as an option) Composite inserts for power, control and instrumentation service available.
- **RADSOK® HIGH AMPERAGE CONTACTS** – Special arrangements are available with RADSOK high amperage contacts. Standard Star-line EX inserts are not interchangeable with new RADSOK contact insert arrangements.
- **RoHS COMPLIANT PRODUCT AVAILABLE** – Consult Amphenol Industrial Operations

STAR-LOK™ Series

The Star-Lok's unique swiftmate spring-loaded **reverse bayonet coupling mechanism**, creates a positive metal to metal lock-up between the plug and receptacle, with a simple push of the plug to mate and a simple eighth turn and pull to unmate.

** Star-Lok Series Connectors are certified to UL 1682 specifications.*

- **UL & CSA** listed to new 1682 requirements
- **ENVIRONMENTAL RESISTANCE** – Design and materials withstand the most challenging operating conditions. Series has an IP 67 rating.
- **HARD ANODIC COATING** – AII machine, aluminum parts finished with a hard, scratch-resistant coating per MIL-A-8625, Type III. Dielectric strength 1800 volts. Heat resistance of 750° F.
- **SOLDER, CRIMP AND PRESSURE TERMINALS AVAILABLE**
- **REVERSIBLE INSERTS** – A full range of contact inserts for power, signal and mixed applications are available. All are interchangeable and reversible to suit specific needs.
- **EASILY ACCESSIBLE WIRE TERMINALS** – Conductors are readily terminated to contacts. Cable housings are slipped over conductors or leads after terminating. Cumbersome handling and seating of inserts with conductors attached is eliminated.
- **LARGE WIRING SPACE** – Ample wiring space is provided in cable housings and hardware.
- **HIGH TENSILE STRENGTH ALUMINUM** – Bar Stock Components precision machined. Points of impact designed for extra strength.
- **RADSOK® HIGH AMPERAGE CONTACTS** – Special arrangements are available with RADSOK high amperage contacts. Standard Star-Lok inserts are not interchangeable with new RADSOK contact insert arrangements.

Star-Lok's new innovative design features a patented coupling mechanism – a one-handed swift engagement provides a positive connection and consistent mating.

Star-Lok's coupling mechanism also eliminates the problems associated with threaded coupling (dirt, thread damage, many turns to fully mate, etc.), ensuring positive mating every time. The mechanism requires only a slight turn and pull to unmate and is engineered to resist vibration.

Star-Lok's resistance to axial wear offers true metal-to-metal bottoming of mated components. Star-Lok is developed from the proven Pyle Star-Line connector platform and offers: a large family of inserts, contacts and hardware options and an array of signal, power and mixed arrangement designs.

RoHS COMPLIANT PRODUCT AVAILABLE – Consult Amphenol Industrial Operations.

Environmental Highlights

PROPERTY	MIL-5015 REQUIREMENTS CLASSES A, B, E J & R	STAR-LINE, STAR-LOK CONNECTORS
TEMPERATURE	-67° F to 225° F	Temperature Classes A, B, E, J and R can withstand 257° F continuously. For short duration high-temperature life, consult factory.
PRESSURE	No requirement	300 PSI external (coupled connectors) 200 PSI internal (with pin and socket inserts)
AIR LEAKAGE	1 cubic inch/ hour maximum	Exceeds Classes E and R specifications
HUMIDITY AND MOISTURE RESISTANCE	1 1/2 times A.C. voltage rating after 14 days. Exposure to 95% relative humidity at 160° F.	Exceeds Classes E and R. MIL-5015 Meets MIL-STD-202B, Method 106A
CORROSION RESISTANCE	48 Hours – Method 1001 MIL-STD-1344 No exposure of base metal.	Salt spray: 300 days – No exposure of base metal.
CHEMICAL RESISTANCE	No requirement	Oil, most acids and alkalis.
DUST RESISTANCE	No requirement	Meets MIL-STD-202B, Method 110, Condition B
SHOCK RESISTANCE	50 G minimum	Exceeds 60 G's Certain inserts available to 200 G.
VIBRATION	Method 2006 Method II MIL-STD-1344	Exceeds Method II & MIL-STD-167-1 (Ships).
TEST PROBE ABUSE	Contact size No. 16 and No. 18	Exceeds MIL-5015 on all contacts No. 18 through 4/0.

Why the Double-Lead Acme Thread?

The double-lead Acme thread is a moderate torque quick-coupling thread which permits complete coupling in approximately one turn of the coupling nut. In addition, there are actually two parallel threads having starting points 180 degrees apart. All of this ensures that plugs and receptacles are being mated or unmated axially. The thread contour makes it self-cleaning.

One parallel thread removed to show actual thread angle.

Standard double-lead Acme. Two parallel threads.

Wire Limitation Guide

There are restrictions to the maximum diameter of wire as they relate to the rear or wire side of the connector insert as follows.

Mod I. When wires are passed through the rigid back insulation for ease of soldering:

Wire size	Maximum diameter
#4/0	.747”
#2/0	.555”
#4	.400”
#8	.262”
#10	.201”
#12	.150”
#16	.107”
#18	.086”
Mod II & III	
#10	.248”
#12	.193”
#16	.130”
#18	.110”

MOD I Captive Contact Inserts

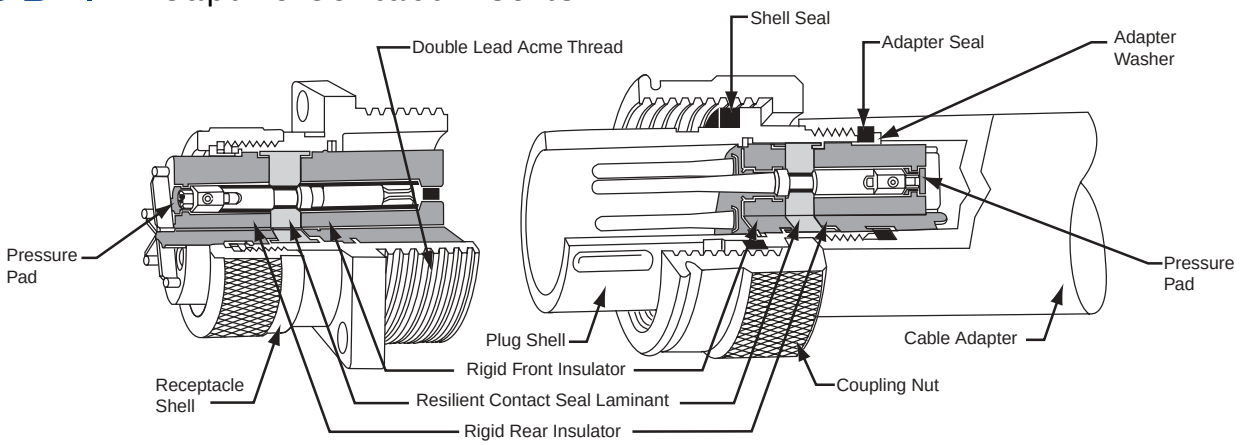

Self-sealing Construction: all MOD I captive contact inserts are capable of being terminated after assembly in the basic barrel and are completely self-sealing when pressurized by any selected adapter. Water, gas, vapor, moisture or dust positively cannot pass in either direction through or around the insulation.

The "sandwich" construction of MOD I inserts consists of a resilient silicone laminate between two rigid plastic insulators. The resilient laminate seals absorbs shock and vibration and allows the contacts to align themselves freely. The rigid faced plastic insulators impart just the right amount of restraint to retain the contacts in place.

The combined "sandwich" provides all the advantages of resilient mounting plus all the advantages of rigid mounting, with none of the shortcomings of either. Under pressure, between a shoulder and a thrust washer, the silicone reacts as a fluid and being non-compressible, flows against all surfaces to affect a reliable seal around the periphery of the insert and around all contacts where they penetrate the insulation.

Contact cavities are clearly numbered on the front and rear insert face to facilitate identification during assembly, inspection and maintenance. Socket insulator contact cavities are of a bellmouth guided entry design. These chamfered lead-ins insure easy and positive mating of male contacts.

MOD II Insertable/Removable Crimp Contact Inserts

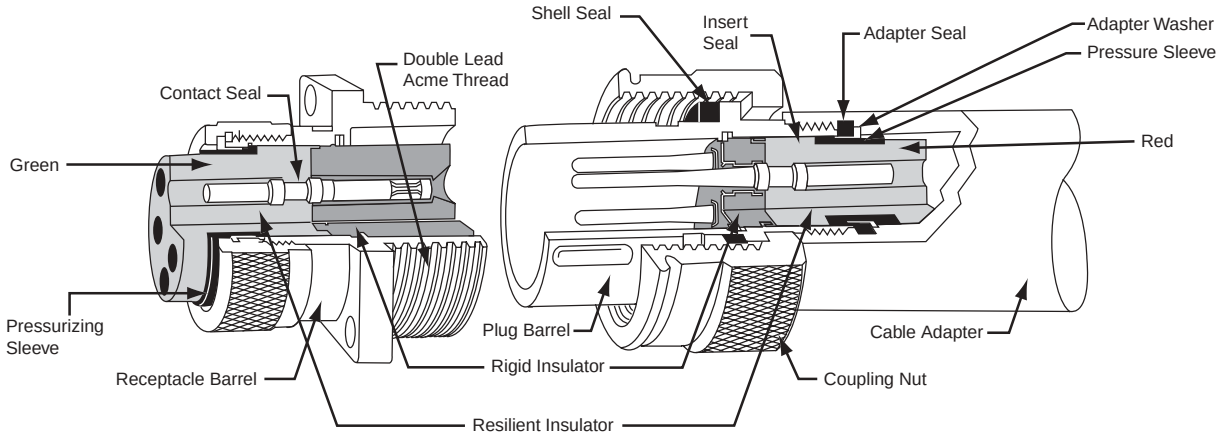

MOD II insulations have one less rigid disc than their MOD I counterparts.

Individual unmounted contacts are crimped to their respective wires outside of the connector where ample working space is available. The crimping operation can be by hand or power operated tool.

Contacts with crimped joint intact are inserted one by one, with a hand tool, into the insulation premounted within the connector barrel shell.

The resilient portion of the insert functions to seal around the contacts and prevent leakage through contact cavities, seal against leakage between the insert and shell, absorb shock and vibration, provide electrical insulation between contacts and retain the contacts in the connector.

Contacts may be inserted and removed without degradation of the retention or environmental capability. The front rigid portion of the insert functions to stabilize and ensure positive alignment of the contacts.

Contact cavities are clearly numbered on the front and rear insert face to facilitate identification during assembling, inspection and maintenance. Socket insulator contact cavities are of a bellmouth guided entry design. These chamfered lead-ins ensure easy and positive mating of male contacts.

MOD III Insertable/Removeable Crimp Collet Retained Contact

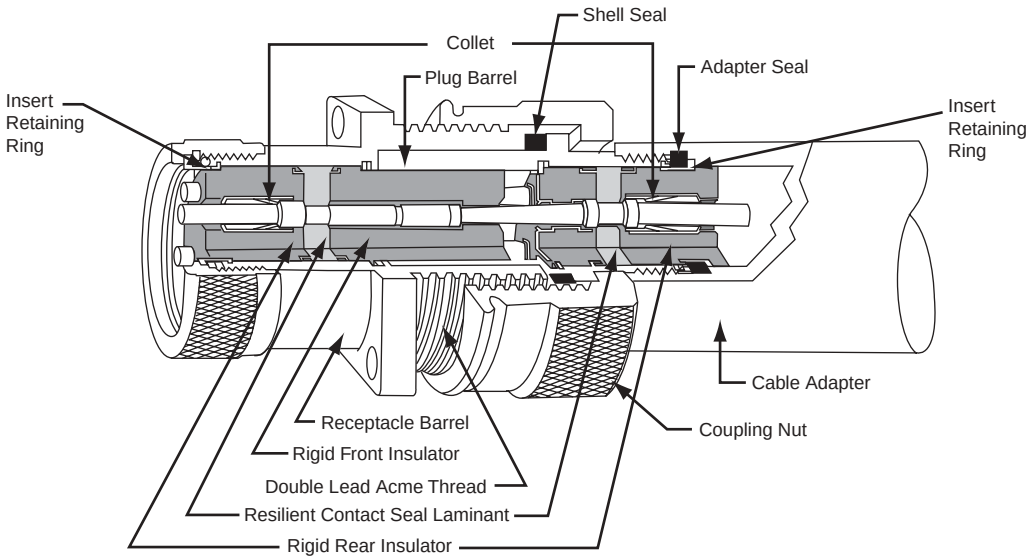

Three element contact inserts are factory installed and locked into position with a non-removable retaining ring. This "sandwich" assembled insert, for rear-insertable and released contacts consist of a resilient laminant seal interposed between two rigid plastic insulators. This proven design concept eliminates the potential failure possibilities normally found in all resilient or all rigid inserts by combining all the advantages of both the resilient and rigid mounting systems.

The resilient laminant insulator absorbs shock or vibration and allows contacts to adjust themselves freely. The resilient insulator affects a full and reliable seal around each contact when compressed by seating of the accessory hardware. In addition, the laminant also provides a seal between the connector insert and the internal bore of the plug or receptacle shell.

The rigid rear insulator supports and locks the beryllium copper collets. The rigid front insulator positions the forward contact-locating shoulder and the collet tines lock the rear shoulder of the contacts. The contacts are positively restrained against forward and rear movement. The main advantages of collet retention are lower insertion forces, eliminating need for insertion tools, and higher retention forces. Collet locking tines permit the contacts to be released and removed from the rear of the insert for quick and easy circuit changes.

Contact cavities are clearly numbered on the front and rear insert face to facilitate identification during assembly, inspection and maintenance. Socket insulator contact cavities are of a bellmouth guided entry design. These chamfered lead-ins ensure easy and positive mating of male contacts.

Summary

The foregoing is a brief explanation of the three basic insert designs offered within this catalog. It offers different and distinct advantages for the cable terminator, electrician and production worker.

When the connector is in use, as a functional device the insert MOD design has no effect on the intermateability of the connector. When a configuration you have selected gives you a choice of MOD design, ask yourself the following questions:

1. Do you have a large quantity of connectors to apply? If you do, then the crimp removable series would be appropriate with its inherent timesaving advantages during terminations.
2. Are circuits likely to be changed often, i.e., would the connector function as a "patching device?" Here, too, the crimp versions with easily removed and installed contacts are advantageous.

If a contact configuration is desired but is not shown, consult the factory. Insert arrangements are constantly being added to the line.

Custom Build Your Own Connectors

Power Connectors – 20-30-60-100-200-325-700 Amperes, 1 thru 10 Contacts
Control & Instrumentation Connectors – 3 thru 143 Contacts

The following pages present connector sub-assemblies which are available and can be used in conjunction with the inserts listed.

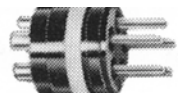

PIN INSERT CONFIGURATION

PLUG CONFIGURATION

RECEPTACLE CONFIGURATION

SOCKET INSERT CONFIGURATION

Ordering Information

All plug and receptacle assemblies require two part numbers:

A. The catalog number of the desired insert.

B. The catalog number of the selected plug or receptacle hardware.

To Order Complete Assemblies

1. Determine supply voltage, amperage and number of contacts desired.

2. Select insert configuration from pages 37-63. Write down Dash Number, Shell Size and MOD number of insert. Voltage and amperage information can be found on page 30. Example: 3#12 contacts – 27P (MALE) and 27S (FEMALE); MOD I; Shell Size 12 (page 37).

3. Select desired plug and receptacle hardware from pages 9-28. Make certain that the shell size of the hardware corresponds with the shell size of the desired insert. Determine outside diameter of cable. Example: Male Plug with Basket Weave. Cable is 3 conductor #12 (.635 outside diameter). ZPLK-1212-27P (page 15).

Female Receptacle mounted to Junction Box with 45° Angle Adapter and 1” Conduit Hub. ZRLBB-312-27S (page 23).

4. Order tools from pages 76-77.

To Order Assemblies Without The Insert

(For large users stocking connector components in bulk)

1. If a MOD I insert will be used, order the hardware by the catalog number and eliminate the asterisk. Example: ZPLD-1212 (page 12).

2. If a MOD II insert will be used, order by the catalog number but substitute a 200 for the asterisk. Example: ZPLD-1212-200

3. MOD III inserts must be ordered assembled in their basic barrel (consult Amphenol Industrial Operations).

Please Read Carefully:

1. Hardware with a longer cable housing should be used if the insert has:
   A. Any pressure contact – line or ground.
   B. More than 10 contacts-any size.
   C. More than 4 #10 or larger contacts.
2. A jack coupling nut should be used if the insert has:
   A. A configuration with shorter relay contacts.
   B. A configuration of 37 or more contacts.

   A JACK COUPLING NUT SHOULD NOT BE USED ON ANY POWER INSERT CONNECTOR THAT IS TO BE DISCONNECTED UNDER LOAD
3. To insure proper coupling the following torque values should be used on the coupling nut:

Shell Size	Torque Setting (lb. ft.)
12	11,0
16	13.5
20	15.5
C20	15.5
24	23.0
C24	23.0
28	31.0
C28	31.0

NOTE: The N.E.C. circuit breaking and non-circuit breaking ratings are based on test results of contacts and connectors. Consult the N.E.C. when selecting wire/cable for specific applications. Under certain conditions, a wire size may be rated higher or lower than our table indicates for a given contact size.

Connector Assemblies

Typical MOD I Plug Components

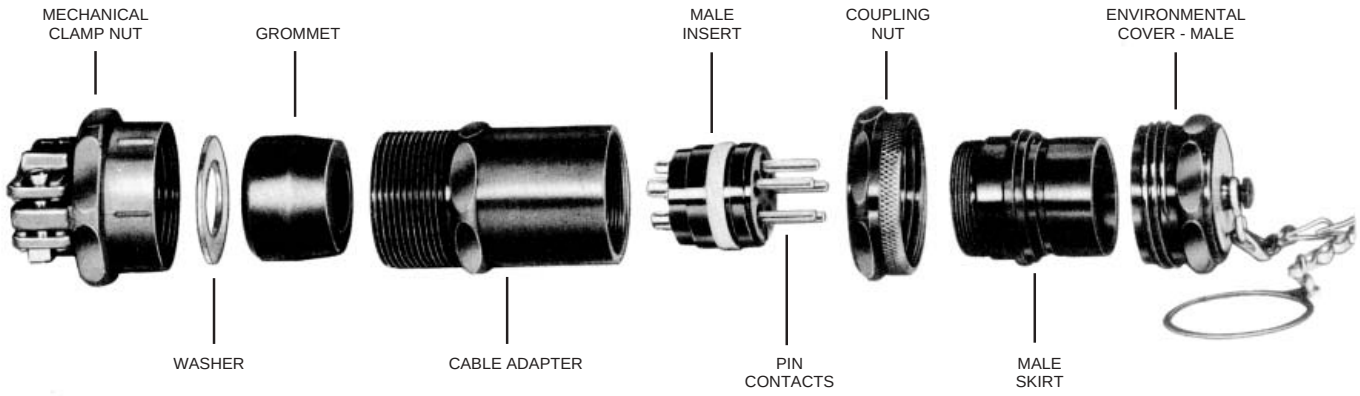

Typical MOD I Receptacle Components

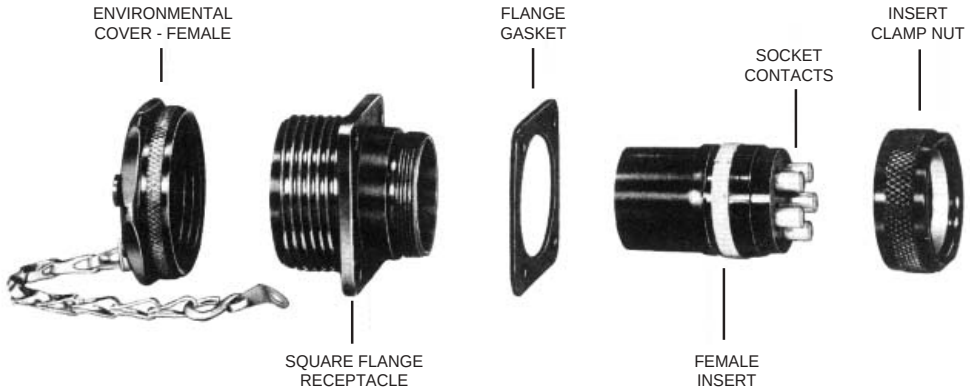

Connector Basic Components

STAR-LINE Assembly

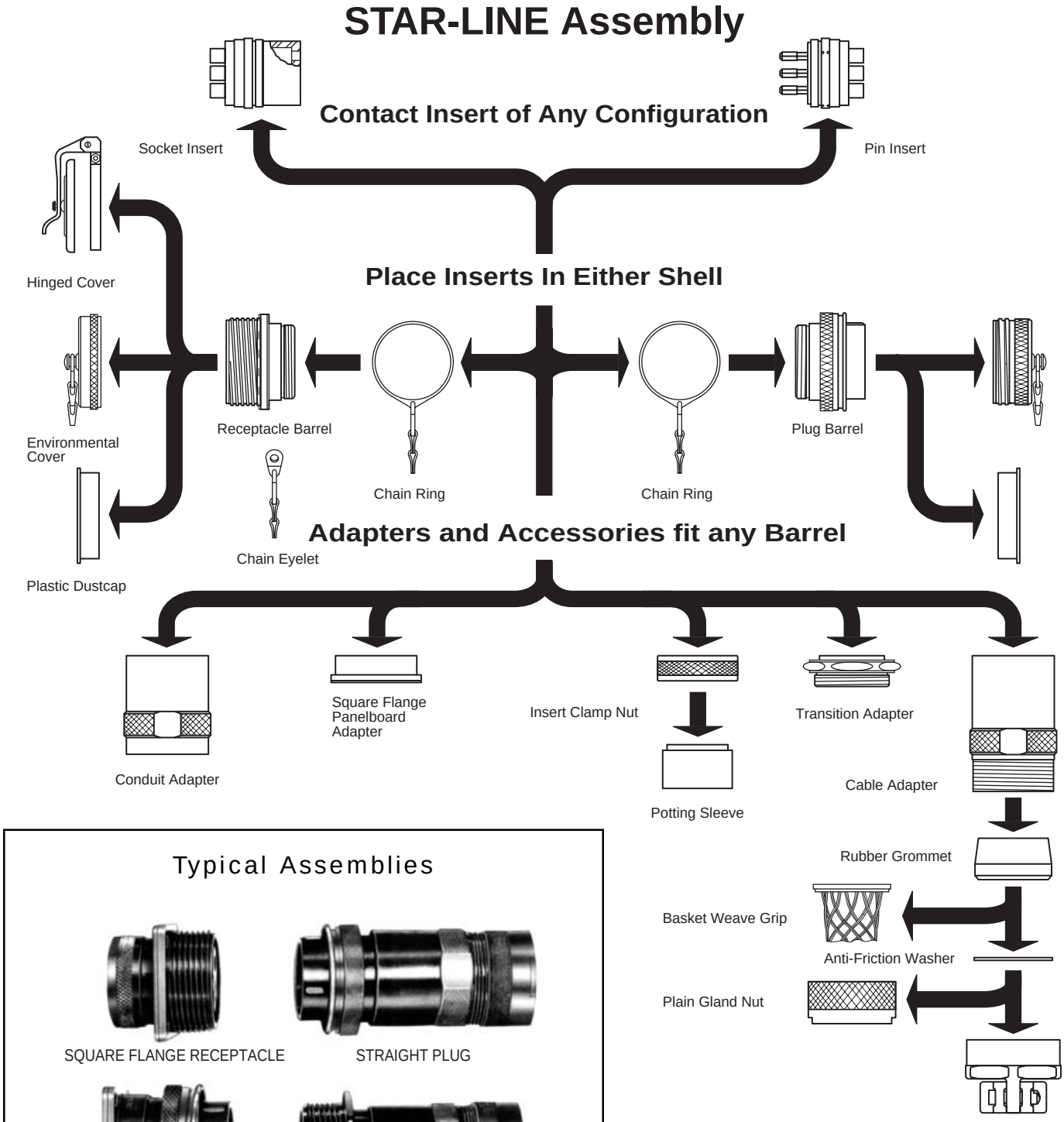

Typical Assemblies

SQUARE FLANGE RECEPTACLE

STRAIGHT PLUG

SQUARE FLANGE MOUNTED PLUG

IN-LINE RECEPTACLE

Code Logic
Star-Line & Star-Lok Series

Cable Mounted Connectors

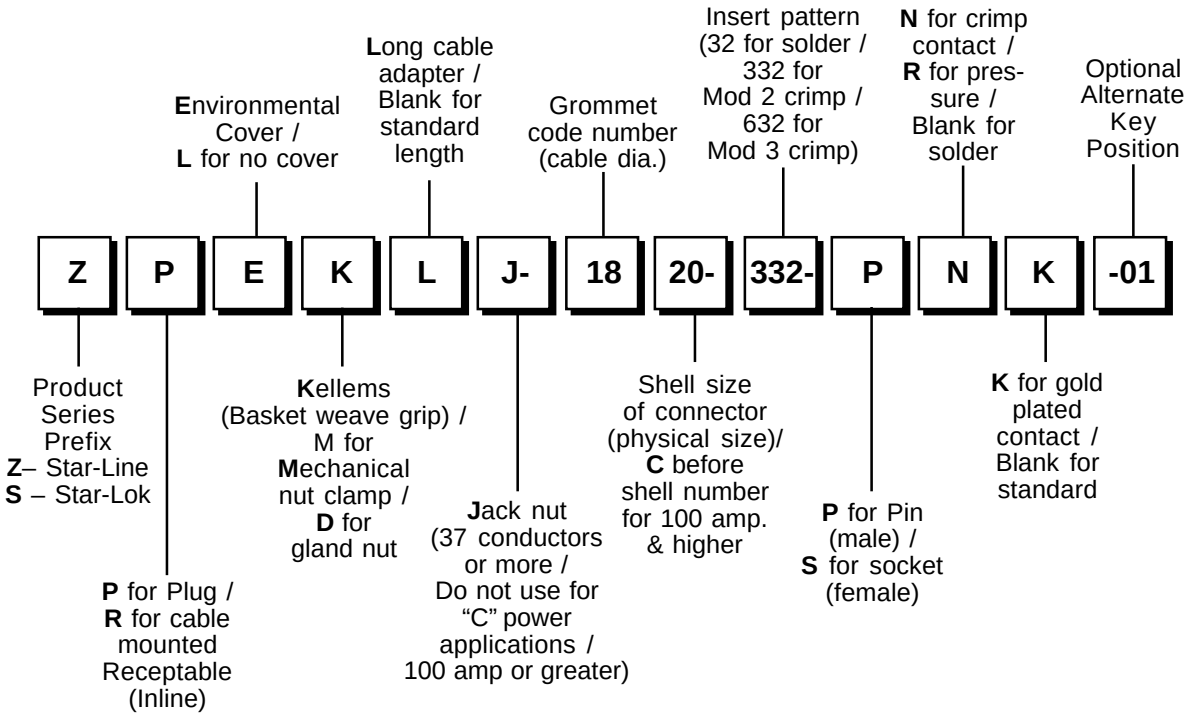

Fixed Connectors

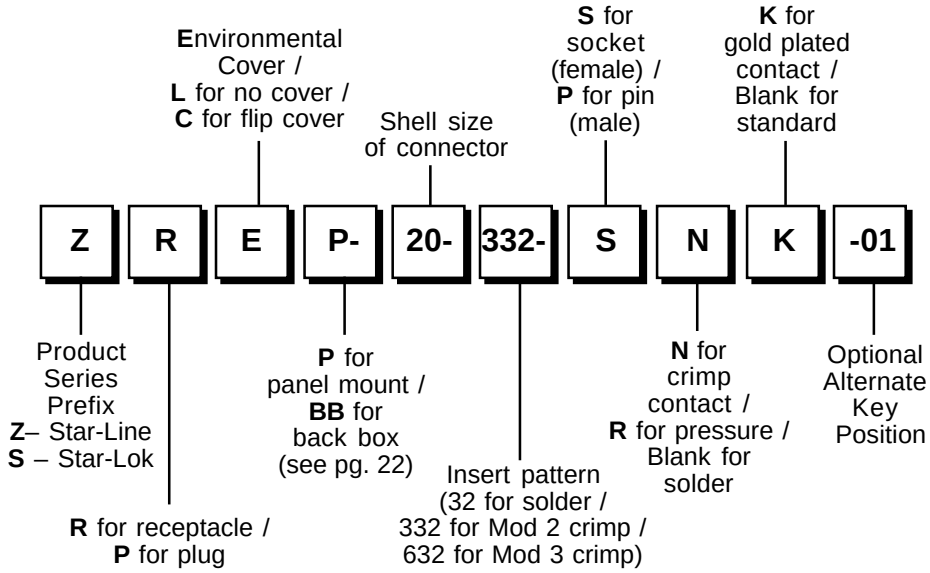

RoHS COMPLIANT PRODUCT AVAILABLE – Consult Amphenol Industrial Operations.

Connector Basic Components

STAR-LOK Assembly

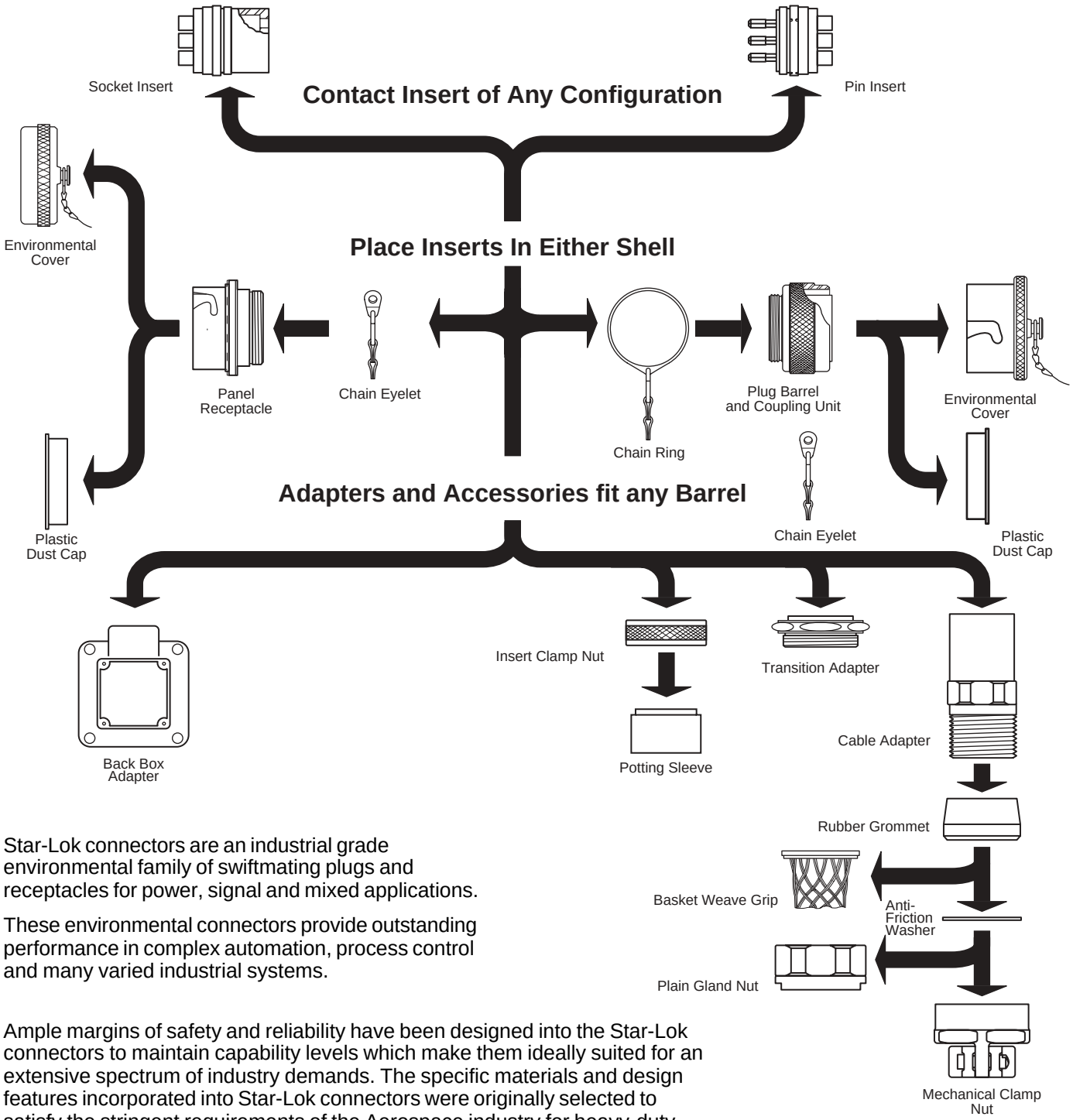

Star-Lok connectors are an industrial grade environmental family of swiftmating plugs and receptacles for power, signal and mixed applications.

These environmental connectors provide outstanding performance in complex automation, process control and many varied industrial systems.

Ample margins of safety and reliability have been designed into the Star-Lok connectors to maintain capability levels which make them ideally suited for an extensive spectrum of industry demands. The specific materials and design features incorporated into Star-Lok connectors were originally selected to satisfy the stringent requirements of the Aerospace industry for heavy-duty connectors. These connectors combine electrical and mechanical capabilities that exceed the performance parameters established by the Military Specification MIL-5015.

Straight Plug

With Standard Compression Nut

Types
_PLD _PED

To specify a complete plug, substitute the Dash No. of the contact insert selected, for the Asterisk (*) in the Catalog No. below .
NOTE: The jack nut should not be used with current rupture insert configurations.

For Star-Line series add a "**Z**" to the beginning of catalog no. (Ex. ZPLD).
For Star-Lok series add an "**S**" to the beginning of catalog no. (Ex. SPLD).

Size Cable	Shell Size	Cat. No. With Standard Coupling Nut	DIMENSIONS WITH STANDARD CABLE ADAPTER A	B	C	Catalog No. With Jack Coupling Nut
Select from Table Below and Substitute Symbol No. for Delta▲	12	_PLD-▲-12-*	5-3/8	1-13/16	5-31/32	ZPLDJ-▲-12-*
	16	_PLD-▲-16-*	5-5/8	2-5/16	5-7/32	ZPLDJ-▲-16-*
	20	_PLD-▲-20-*	6-1/8	2-13/16	6-23/32	ZPLDJ-▲-20-*
	C20	_PLD-▲-C20-*	6-5/8	2-13/16	7-7/32	ZPLDJ-▲-C20-*
	24	_PLD-▲-24-*	6-5/8	3-5/16	7-7/32	ZPLDJ-▲-24-*
	C24	_PLD-▲-C24-*	7-1/8	3-5/16	7-23/32	ZPLDJ-▲-C24-*
	28	ZPLD-▲-28-*	7-1/8	3-13/16	7-23/32	ZPLDJ-▲-28-*
	C28	ZPLD-▲-C28-*	7-5/8	3-13/16	8-7/32	ZPLDJ-▲-C28-*
	WITH LONG CABLE ADAPTER					
	12	_PLDL-▲-12-*	7-5/8	1-13/16	8-7/32	ZPLDLJ-▲-12-*
	16	_PLDL-▲-16-*	7-7/8	2-5/16	8-15/32	ZPLDLJ-▲-16-*
	20	_PLDL-▲-20-*	8-3/8	2-13/16	8-31/32	ZPLDLJ-▲-20-*
	C20	_PLDL-▲-C20-*	8-7/8	2-13/16	9-15/32	ZPLDLJ-▲-C20-*
	24	_PLDL-▲-24-*	8-7/8	3-5/16	9-15/32	ZPLDLJ-▲-24-*
	C24	_PLDL-▲-C24-*	9-3/8	3-5/16	9-31/32	ZPLDLJ-▲-C24-*
	28	ZPLDL-▲-28-*	9-1/8	3-13/16	9-23/32	ZPLDLJ-▲-28-*
	C28	ZPLDL-▲-C28-*	9-5/8	3-13/16	10-7/32	ZPLDLJ-▲-C28-*

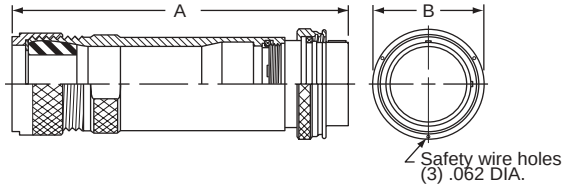

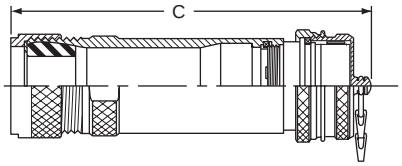

To specify plug with environmental cover, change third letter in Part No. "L' to "E'. Example: _PLD changes to _PED.

OIL-RESISTANT RUBBER GROMMETS—SYMBOL NUMBERS OF SIZES AVAILABLE Substitute the symbol number for the Delta ▲ in the catalog number of plug. Example: _PLD-▲ -12-* for .500 to .625 Dia. Cable changes to _PLD-10 12-*

Cable Dia.	Shell 12	Shell 16	Shells 20 & C20	Shells 24 & C24	Shells 28 & C28	Cable Dia.	Shell 12	Shell 16	Shell 20 & C20	Shells 24 & C24	Shells 28 & C28
.062 to .125	02	–	–	–	–	1.500 to 1.625	–	–	26	26	26
.125 to .250	04	–	–	–	–	1.625 to 1.750	–	–	28	28	28
.250 to .375	06	06	–	–	–	1.750 to 1.875	–	–	30	30	30
.375 to .500	08	08	–	–	–	1.875 to 1.937	–	–	31	–	–
.500 to .625	10	10	10	–	–	1.937 to 2.000	–	–	–	32	32
.625 to .750	12	12	12	–	–	2.000 to 2.125	–	–	–	34	34
.750 to .875	14	14	14	–	–	2.125 to 2.250	–	–	–	36	36
.875 to .937	15	–	–	–	–	2.250 to 2.375	–	–	–	38	38
.937 to 1.000	–	16	16	16	–	2.375 to 2.437	–	–	–	39	–
1.000 to 1.125	–	18	18	18	–	2.437 to 2.500	–	–	–	–	40
1.125 to 1.250	–	20	20	20	–	2.500 to 2.625	–	–	–	–	42
1.250 to 1.375	–	22	22	22	–	2.625 to 2.750	–	–	–	–	44
1.375 to 1.437	–	23	–	–	–	2.750 to 2.875	–	–	–	–	46
1.437 to 1.500	–	–	24	24	24						

Straight Plug

With Mechanical Clamp Nut

To specify a complete plug, substitute the Dash No. of the contact insert selected, for the Asterisk (*) in the Catalog No. below.
NOTE: The jack nut should not be used with current rupture insert configurations.

For Star-Line series add a "**Z**" to the beginning of catalog no. (Ex. ZPLD).
For Star-Lok series add an "**S**" to the beginning of catalog no. (Ex. SPLD).

Types
_PLM _PEM

Size Cable	Shell Size	Cat. No. With Standard Coupling Nut	DIMENSIONS WITH STANDARD CABLE ADAPTER A	B	C	D	E	Catalog No. With Jack Coupling Nut
Select from Table Below and Substitute Symbol No. for Delta▲	12	_PLM-▲-12-*	6-1/8	1-13/16	6-23/32	2-3/8	1-3/4	ZPLMJ-▲-12-*
	16	_PLM-▲-16-*	6-7/16	2-5/16	7-1/32	3	2-1/4	ZPLMJ-▲-16-*
	20	_PLM-▲-20-*	7	2-13/16	7-19/32	3-3/4	2-3/4	ZPLMJ-▲-20-*
	C20	_PLM-▲-C20-*	7-1/2	2-13/16	8-3/32	3-3/4	2-3/4	ZPLMJ-▲-C20-*
	24	_PLM-▲-24-*	7-9/16	3-5/16	8-5/32	4-1/2	3-1/4	ZPLMJ-▲-24-*
	C24	_PLM-▲-C24-*	8-1/16	3-5/16	8-21/32	4-1/2	3-1/4	ZPLMJ-▲-C24-*
	28	ZPLM-▲-28-*	8-1/8	3-13/16	8-23/32	5-1/8	3-3/4	ZPLMJ-▲-28-*
	C28	ZPLM-▲-C28-*	8-5/8	3-13/16	9-7/32	5-1/8	3-3/4	ZPLMJ-▲-C28-*
	WITH LONG CABLE ADAPTER							
	12	_PLML-▲-12-*	8-3/8	1-13/16	8-31/32	2-3/8	1-3/4	ZPLMLJ-▲-12-*
	16	_PLML-▲-16-*	8-11/16	2-5/16	9-9/32	3	2-1/4	ZPLMLJ-▲-16-*
	20	_PLML-▲-20-*	9-1/4	2-13/16	9-27/32	3-3/4	2-3/4	ZPLMLJ-▲-20-*
	C20	_PLML-▲-C20-*	9-3/4	2-13/16	10-11/32	3-3/4	2-3/4	ZPLMLJ-▲-C20-*
	24	_PLML-▲-24-*	9-13/16	3-5/16	10-13/32	4-1/2	3-1/4	ZPLMLJ-▲-24-*
	C24	_PLML-▲-C24-*	10-5/16	3-5/16	10-29/32	4-1/2	3-1/4	ZPLMLJ-▲-C24-*
	28	ZPLML-▲-28-*	10-1/8	3-13/16	10-23/32	5-1/8	3-3/4	ZPLMLJ-▲-28-*
	C28	ZPLML-▲-C28-*	10-5/8	3-13/16	11-7/32	5-1/8	3-3/4	ZPLMLJ-▲-C28-*

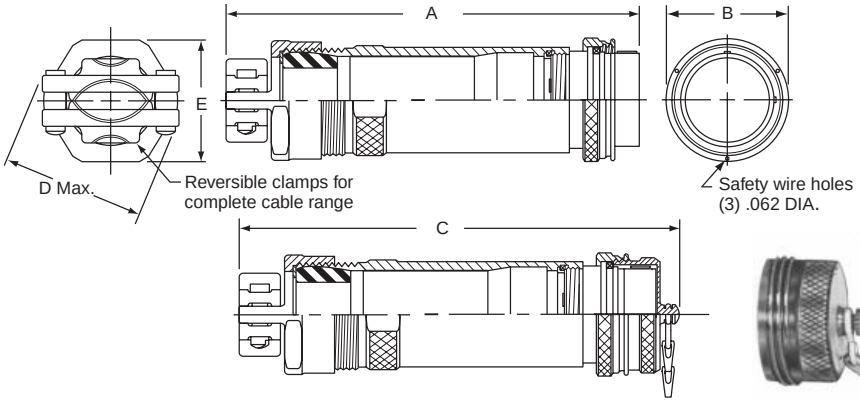

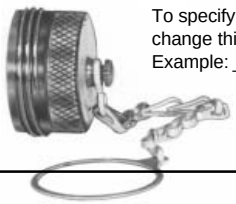

To specify plug with environmental cover, change third letter in Part No. "L' to "E'. Example: _PLM changes to _PEM.

OIL-RESISTANT RUBBER GROMMETS—SYMBOL NUMBERS OF SIZES AVAILABLE Substitute the symbol number for the Delta ▲ in the catalog number of plug. Example: _PLM-▲ -12-* for .500 to .625 Dia. Cable changes to _PLM-10 12-*

Cable Dia.	Shell 12	Shell 16	Shells 20 & C20	Shells 24 & C24	Shells 28 & C28	Cable Dia.	Shell 12	Shell 16	Shell 20 & C20	Shells 24 & C24	Shells 28 & C28
.062 to .125	02	–	–	–	–	1.500 to 1.625	–	–	26	26	26
.125 to .250	04	–	–	–	–	1.625 to 1.750	–	–	28	28	28
.250 to .375	06	06	–	–	–	1.750 to 1.875	–	–	30	30	30
.375 to .500	08	08	–	–	–	1.875 to 1.937	–	–	31	–	–
.500 to .625	10	10	10	–	–	1.875 to 2.000	–	–	–	32	32
.625 to .750	12	12	12	–	–	2.000 to 2.125	–	–	–	34	34
.750 to .875	14	14	14	–	–	2.125 to 2.250	–	–	–	36	36
.875 to .937	15	–	–	–	–	2.250 to 2.375	–	–	–	38	38
.875 to 1.000	–	16	16	16	–	2.375 to 2.437	–	–	–	39	–
1.000 to 1.125	–	18	18	18	–	2.375 to 2.500	–	–	–	–	40
1.125 to 1.250	–	20	20	20	–	2.500 to 2.625	–	–	–	–	42
1.250 to 1.375	–	22	22	22	–	2.625 to 2.750	–	–	–	–	44
1.375 to 1.437	–	23	–	–	–	2.750 to 2.875	–	–	–	–	46
1.375 to 1.500	–	–	24	24	24						

Straight Plug

With Conduit Adapter (for flexible conduit fittings)

Types
_PLT _PET

To specify a complete plug, substitute the dash no. of the contact insert selected for the asterisk (*)
In the catalog no. below. NOTE: The jack nut should not be used with current rupture insert configurations.
A PLUG WITH JACK COUPLING NUT SHOULD BE USED WITH INSERTS HAVING 37 OR MORE CONTACTS.

For Star-Line series add a "**Z**" to the beginning of catalog no. (Ex. ZPLT).
For Star-Lok series add an "**S**" to the beginning of catalog no. (Ex. SPLT).

Shell Size	Size Conduit	Catalog No. With Standard Coupling Nut	DIMENSIONS				Catalog No. With Jack Coupling Nut
			A	B	C	D	
12	3/4	_PLT-2 12-*	4-1/4	1-13/16	4-27-32	3/4	ZPLTJ-2 12-*
16	1-1/4	_PLT-4 16-*	4-3/8	2-5/16	4-31/32	1-1/4	ZPLTJ-4 16-*
20	1-1/2	_PLT-5 20-*	4-1/2	2-13/16	5-3/32	1-1/2	ZPLTJ-5 20-*
C20	1-1/2	_PLT-5 C20-*	5	2-13/16	5-19/32	1-1/2	ZPLTJ-5 C20-*
24	2	_PLT-6 24-*	4-5/8	3-5/16	5-7/32	2	ZPLTJ-6 24-*
C24	2	_PLT-6 C24-*	5-1/8	3-5/16	5-23/32	2	ZPLTJ-6 C24-*
28	2-1/2	ZPLT-7 28-*	5-3/32	3-13/16	5-11/16	2-1/2	ZPLTJ-7 28-*
C28	2-1/2	ZPLT-7 C28-*	5-19/32	3-13/16	6-3/16	2-1/2	ZPLTJ-7 C28-*

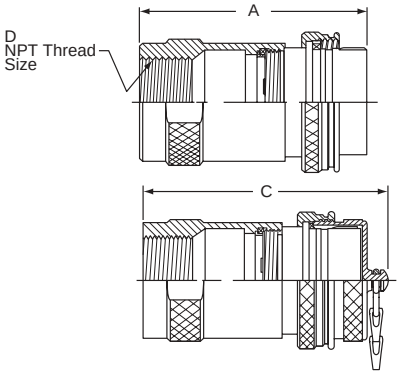

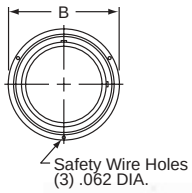

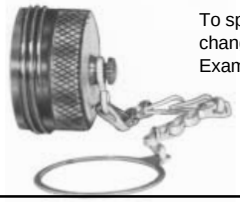

To specify plug with environmental cover, change third letter in Part No. "L" to "E". Example: _PLT changes to _PET.

Straight Male Plug

Panel Mount (Not available in Star-Lok)

Types
ZPLP ZPEP

To specify a complete plug, substitute the dash no. of the contact insert selected for the asterisk (*) in the catalog no. below.
NOTE The jack nut should not be used with current rupture insert configurations
A PLUG WITH JACK COUPLING NUT SHOULD BE USED WITH INSERTS HAVING 37 OR MORE CONTACTS.

Shell Size	Open Back	Catalog No. With Standard Coupling Nut	DIMENSIONS						Catalog No. With Jack Coupling Nut
			A	B	C	G	H	J	
12	Use with or without Potting Sleeve	ZPLP-12-*	2-3/8	1-13/16	2-31/32	1-17/64	1-5/8	3/16	ZPLPJ- 12-*
16		ZPLP-16-*	2-13/32	2-5/16	3	1-11/16	2-1/8	7/32	ZPLPJ- 16-*
20		ZPLP-20-*	2-7/16	2-13/16	3-1/32	2-3/32	2-5/8	9/32	ZPLPJ- 20-*
C20		ZPLP-C20-*	2-15/16	2-13/16	3-17/32	2-3/32	2-5/8	9/32	ZPLPJ- C20-*
24		ZPLP-24-*	2-15/32	3-5/16	3-1/16	2-17/32	3-1/8	11/32	ZPLPJ- 24-*
C24		ZPLP-C24-*	2-31/32	3-5/16	3-9/16	2-17/32	3-1/8	11/32	ZPLPJ- C24-*
28		ZPLP-28-*	2-15/32	3-13/16	3-1/16	3-1/32	3-3/4	11/32	ZPLPJ- 28-*
C28		ZPLP-C28-*	2-31/32	3-13/16	3-9/16	3-1/32	3-3/4	11/32	ZPLPJ- C28-*

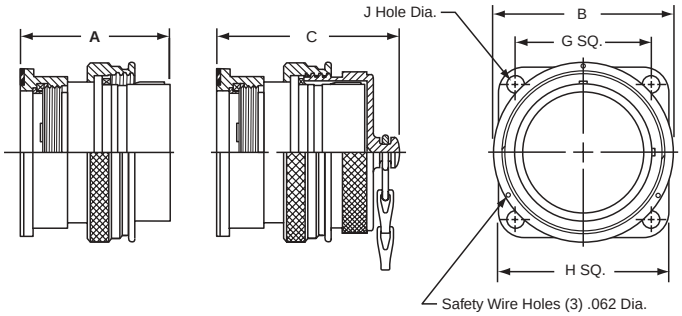

To specify plug with environmental cover, change third letter in Part No. "L" to "E". Example: ZPLP changes to ZPEP.

Straight Plug

With Basketweave Cable Grip

Types
_PLK _PEK

To specify a complete plug, substitute the Dash No. of the contact insert selected for the asterisk (*) in the catalog no
NOTE: The jack nut should not be used with current rupture insert configurations.
A PLUG WITH JACK COUPLING NUT SHOULD BE USED WITH INSERTS HAVING 37 OR MORE CONTACTS

For Star-Line series add a "**Z**" to the beginning of catalog no. (Ex. ZPLK).
For Star-Lok series add an "**S**" to the beginning of catalog no. (Ex. SPLK).

Size Cable	Shell Size	Catalog No. With Standard Coupling Nut	DIMENSIONS WITH STANDARD CABLE ADAPTER A	B	C	Catalog No. With Jack Coupling Nut
Select from Table Below and Substitute Symbol No. for Delta ▲	12	_PLK-▲-12-*	5-3/8	1-13/16	5-31/32	ZPLKJ-▲-12-*
	16	_PLK-▲-16-*	5-5/8	2-5/16	6-7/32	ZPLKJ-▲-16-*
	20	_PLK-▲-20-*	6-1/8	2-13/16	6-23/32	ZPLKJ-▲-20-*
	C20	_PLK-▲-C20-*	6-5/8	2-13/16	7-7/32	ZPLKJ-▲-C20-*
	24	_PLK-▲-24-*	6-5/8	3-5/16	7-7/32	ZPLKJ-▲-24-*
	C24	_PLK-▲-C24-*	7-1/8	3-5/16	7-23/32	ZPLKJ-▲-C24-*
	28	ZPLK-▲-28-*	7-1/8	3-13/16	7-23/32	ZPLKJ-▲-28-*
	C28	ZPLK-▲-C28-*	7-5/8	3-13/16	8-7/32	ZPLKJ-▲-C28-*
	WITH LONG CABLE ADAPTER					
	12	_PLKL-▲-12-*	7-5/8	1-13/16	8-7/32	ZPLKJ-▲-12-*
	16	_PLKL-▲-16-*	7-7/8	2-5/16	8-15/32	ZPLKJ-▲-16-*
	20	_PLKL-▲-20-*	8-3/8	2-13/16	8-31/32	ZPLKJ-▲-20-*
	C20	_PLKL-▲-C20-*	8-7/8	2-13/16	9-15/32	ZPLKJ-▲-C20-*
	24	_PLKL-▲-24-*	8-7/8	3-5/16	9-15/32	ZPLKJ-▲-24-*
	C24	_PLKL-▲-C24-*	9-3/8	3-5/16	9-31/32	ZPLKJ-▲-C24-*
	28	ZPLKL-▲-28-*	9-1/8	3-13/16	9-23/32	ZPLKJ-▲-28-*
	C28	ZPLKL-▲-C28-*	9-5/8	3-13/16	10-7/32	ZPLKJ-▲-C28-*

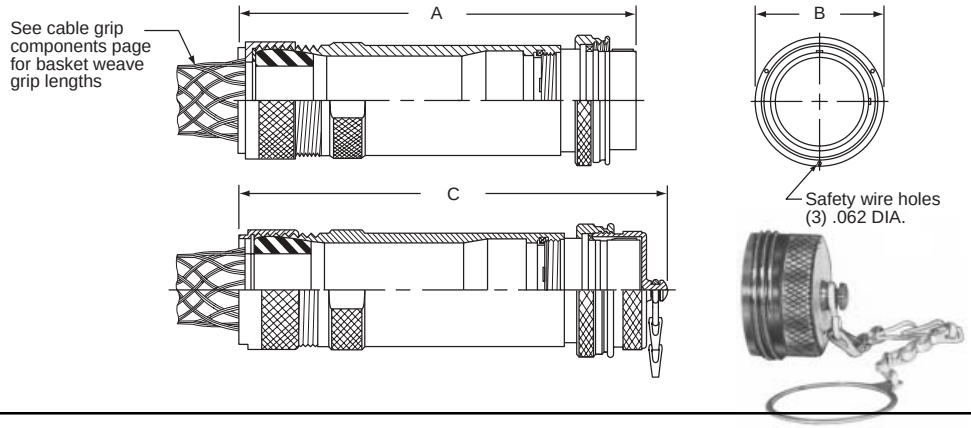

To specify plug with environmental cover, change third letter in Part No. "L" to "E". Example: _PLK changes to _PEK.

OIL-RESISTANT RUBBER GROMMETS—SYMBOL NUMBERS OF SIZES AVAILABLE Substitute the symbol number for the Delta ▲ in the catalog number of plug. Example: _PLK-▲ -12-* for .500 to .625 Dia. Cable changes to _PLK-10 12-*

Cable Dia.	Shell 12	Shell 16	Shells 20 & C20	Shells 24 & C24	Shells 28 & C28	Cable Dia.	Shell 12	Shell 16	Shell 20 & C20	Shells 24 & C24	Shells 28 & C28
.062 to .125	02	–	–	–	–	1.500 to 1.625	–	–	26	26	26
.125 to .250	04	–	–	–	–	1.625 to 1.750	–	–	28	28	28
.250 to .375	06	06	–	–	–	1.750 to 1.875	–	–	30	30	30
.375 to .500	08	08	–	–	–	1.875 to 1.937	–	–	31	–	–
.500 to .625	10	10	10	–	–	1.875 to 2.000	–	–	–	32	32
.625 to .750	12	12	12	–	–	2.000 to 2.125	–	–	–	34	34
.750 to .875	14	14	14	–	–	2.125 to 2.250	–	–	–	36	36
.875 to .937	15	–	–	–	–	2.250 to 2.375	–	–	–	38	38
.875 to 1.000	–	16	16	16	–	2.375 to 2.437	–	–	–	39	–
1.000 to 1.125	–	18	18	18	–	2.437 to 2.500	–	–	–	–	40
1.125 to 1.250	–	20	20	20	–	2.500 to 2.625	–	–	–	–	42
1.250 to 1.375	–	22	22	22	–	2.625 to 2.750	–	–	–	–	44
1.375 to 1.437	–	23	–	–	–	2.750 to 2.875	–	–	–	–	46
1.375 to 1.500	–	–	24	24	24						

In-Line Receptacle

With Mechanical Clamp Nut

To specify a complete receptacle, substitute the dash no. of the contact insert selected for the asterisk (*) in the catalog no. below.

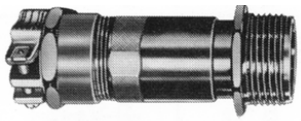

Types
ZRLM ZREM

Size Cable	Shell Size	Cat. No.	DIMENSIONS A	C	D	E	F	G
Select from Table Below and Substitute Symbol No. for Delta ▲	12	ZRLM-▲-12-*	6-1/8	6-3/4	1-3/4	1-61/64	1-3/4	2-3/8
	16	ZRLM-▲-16-*	6-7/16	7-1/16	2-1/4	2-31/64	2-1/4	3
	20	ZRLM-▲-20-*	7	7-5/8	2-3/4	3-1/32	2-3/4	3-3/4
	C20	ZRLM-▲-C20-*	7-1/2	8-1/8	2-3/4	3-1/32	2-3/4	3-3/4
	24	ZRLM-▲-24-*	7-9/16	8-3/16	3-1/4	3-9/16	3-1/4	4-1/2
	C24	ZRLM-▲-C24-*	8-1/16	8-11/16	3-1/4	3-9/16	3-1/4	4-1/2
	28	ZRLM-▲-28-*	8-1/8	8-3/4	3-3/4	4-1/16	3-3/4	5-1/8
	C28	ZRLM-▲-C28-*	8-5/8	9-1/4	3-3/4	4-1/16	3-3/4	5-1/8
	WITH LONG CABLE ADAPTER							
	12	ZRLML-▲-12-*	8-3/8	9	1-3/4	1-61/64	1-3/4	2-3/8
	16	ZRLML-▲-16-*	8-11/16	9-5/16	2-1/4	2-31/64	2-1/4	3
	20	ZRLML-▲-20-*	9-1/4	9-7/8	2-3/4	3-1/32	2-3/4	3-3/4
	C20	ZRLML-▲-C20-*	9-3/4	10-3/8	2-3/4	3-1/32	2-3/4	3-3/4
	24	ZRLML-▲-24-*	9-13/16	10-7/16	3-1/4	3-9/16	3-1/4	4-1/2
	C24	ZRLML-▲-C24-*	10-5/16	10-15/16	3-1/4	3-9/16	3-1/4	4-1/2
	28	ZRLML-▲-28-*	10-1/8	10-3/4	3-3/4	4-1/16	3-3/4	5-1/8
	C28	ZRLML-▲-C28-*	10-5/8	11-1/4	3-3/4	4-1/16	3-3/4	5-1/8

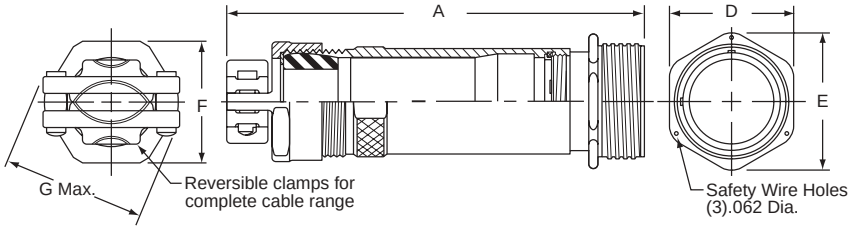

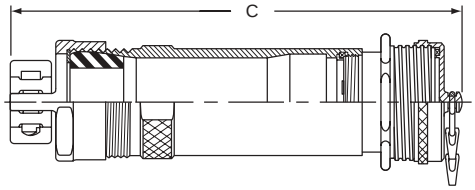

To specify receptacle with threaded environmental cover, change third letter in Part No. "L" to "E".
Example: ZRLM changes to ZREM.

OIL-RESISTANT RUBBER GROMMETS—SYMBOL NUMBERS OF SIZES AVAILABLE
Substitute the symbol number for the Delta ▲ in the catalog number of plug.
Example: ZRLM-▲-12-* for .500 to .625 Dia. cable changes to ZRLM-10 12-*

Cable Dia.	Shell 12	Shell 16	Shells 20 & C20	Shells 24 & C24	Shells 28 & C28	Cable Dia.	Shell 12	Shell 16	Shell 20 & C20	Shells 24 & C24	Shells 28 & C28
.062 to .125	02	–	–	–	–	1.500 to 1.625	–	–	26	26	26
.125 to .250	04	–	–	–	–	1.625 to 1.750	–	–	28	28	28
.250 to .375	06	06	–	–	–	1.750 to 1.875	–	–	30	30	30
.375 to .500	08	08	–	–	–	1.875 to 1.937	–	–	31	–	–
.500 to .625	10	10	10	–	–	1.875 to 2.000	–	–	–	32	32
.625 to .750	12	12	12	–	–	2.000 to 2.125	–	–	–	34	34
.750 to .875	14	14	14	–	–	2.125 to 2.250	–	–	–	36	36
.875 to .937	15	–	–	–	–	2.250 to 2.375	–	–	–	38	38
.875 to 1.000	–	16	16	16	–	2.375 to 2.437	–	–	–	39	–
1.000 to 1.125	–	18	18	18	–	2.437 to 2.500	–	–	–	–	40
1.125 to 1.250	–	20	20	20	–	2.500 to 2.625	–	–	–	–	42
1.250 to 1.375	–	22	22	22	–	2.625 to 2.750	–	–	–	–	44
1.375 to 1.437	–	23	–	–	–	2.750 to 2.875	–	–	–	–	46
1.375 to 1.500	–	–	24	24	24						

In-Line Receptacle

With Standard Compression Nut

To specify a complete receptacle, substitute the dash no. of the contact insert selected for the asterisk (*) in the catalog no. below.

Types
ZRLD ZRED

Size Cable	Shell Size	Cat. No.	Dimensions A	C	D	E
Select from Table Below and Substitute Symbol No. for Delta ▲	12	ZRLD-▲- 12-*	5-3/8	6	1-3/4	1-61/64
	16	ZRLD-▲- 16-*	5-5/8	6-1/4	2-1/4	2-31/64
	20	ZRLD-▲- 20-*	6-1/8	6-3/4	2-3/4	3-1/32
	C20	ZRLD-▲- C20-*	6-5/8	7-1/4	2-3/4	3-1/32
	24	ZRLD-▲- 24-*	6-5/8	7-1/4	3-1/4	3-9/16
	C24	ZRLD-▲- C24-*	7-1/8	7-3/4	3-1/4	3-9/16
	28	ZRLD-▲- 28-*	7-1/8	7-3/4	3-3/4	4-1/16
	C28	ZRLD-▲- C28-*	7-5/8	8-1/4	3-3/4	4-1/16
	With Long Cable Adapter					
	12	ZRLDL-▲-12-*	7-5/8	8-1/4	1-3/4	1-61/64
	16	ZRLDL-▲-16-*	7-7/8	8-1/2	2-1/4	2-31/64
	20	ZRLDL-▲-20-*	8-3/8	9	2-3/4	3-1/32
	C20	ZRLDL-▲-C20-*	8-7/8	9-1/2	2-3/4	3-1/32
	24	ZRLDL-▲-24-*	8-7/8	9-1/2	3-1/4	3-9/16
	C24	ZRLDL-▲-C24-*	9-3/8	10	3-1/4	3-9/16
	28	ZRLDL-▲-28-*	9-1/8	9-3/4	3-3/4	4-1/16
	C28	ZRLDL-▲-C28-*	9-5/8	10-1/4	3-3/4	4-1/16

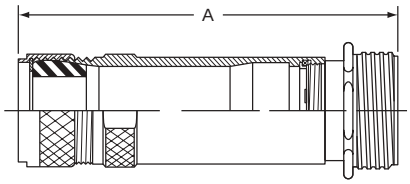

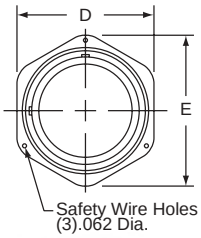

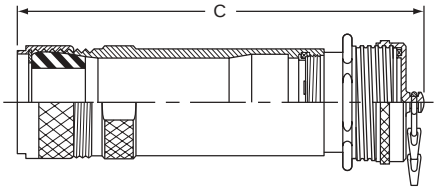

To specify receptacle with threaded environmental cover, change third letter in Part No. "L" to "E".
Example: ZRLD changes to ZRED.

OIL-RESISTANT RUBBER GROMMETS—SYMBOL NUMBERS OF SIZES AVAILABLE
Substitute the symbol number for the Delta ▲ in the catalog number of plug.
Example: ZRLD-▲-12-* for .500 to .625 Dia. cable changes to ZRLD-10 12-*

Cable Dia.	Shell 12	Shell 16	Shells 20 & C20	Shells 24 & C24	Shells 28 & C28	Cable Dia.	Shell 12	Shell 16	Shell 20 & C20	Shells 24 & C24	Shells 28 & C28
.062 to .125	02	–	–	–	–	1.500 to 1.625	–	–	26	26	26
.125 to .250	04	–	–	–	–	1.625 to 1.750	–	–	28	28	28
.250 to .375	06	06	–	–	–	1.750 to 1.875	–	–	30	30	30
.375 to .500	08	08	–	–	–	1.875 to 1.937	–	–	31	–	–
.500 to .625	10	10	10	–	–	1.875 to 2.000	–	–	–	32	32
.625 to .750	12	12	12	–	–	2.000 to 2.125	–	–	–	34	34
.750 to .875	14	14	14	–	–	2.125 to 2.250	–	–	–	36	36
.875 to .937	15	–	–	–	–	2.250 to 2.375	–	–	–	38	38
.875 to 1.000	–	16	16	16	–	2.375 to 2.437	–	–	–	39	–
1.000 to 1.125	–	18	18	18	–	2.437 to 2.500	–	–	–	–	40
1.125 to 1.250	–	20	20	20	–	2.500 to 2.625	–	–	–	–	42
1.250 to 1.375	–	22	22	22	–	2.625 to 2.750	–	–	–	–	44
1.375 to 1.437	–	23	–	–	–	2.750 to 2.875	–	–	–	–	46
1.375 to 1.500	–	–	24	24	24						

In-Line Receptacle

With Basketweave Cable Grip

To specify a complete receptacle, substitute the dash no. of the contact insert selected for the asterisk (*) in the catalog no. below.

Types
ZRLK ZREK

Size Cable	Shell Size	Cat. No.	Dimensions A	C	D	E
Select from Table Below and Substitute Symbol No. for Delta ▲	12	ZRLK-▲- 12-*	5-3/8	6	1-3/4	1-61/64
	16	ZRLK-▲- 16-*	5-5/8	6-1/4	2-1/4	2-31/64
	20	ZRLK-▲- 20-*	6-1/8	6-3/4	2-3/4	3-1/32
	C20	ZRLK-▲- C20-*	6-5/8	7-1/4	2-3/4	3-1/32
	24	ZRLK-▲- 24-*	6-5/8	7-1/4	3-1/4	3-9/16
	C24	ZRLK-▲- C24-*	7-1/8	7-3/4	3-1/4	3-9/16
	28	ZRLK-▲- 28-*	7-1/8	7-3/4	3-3/4	4-1/16
	C28	ZRLK-▲- C28-*	7-5/8	8-1/4	3-3/4	4-1/16
	With Long Cable Adapter					
	12	ZRLKL-▲-12-*	7-5/8	8-1/4	1-3/4	1-61/64
	16	ZRLKL-▲-16-*	7-7/8	8-1/2	2-1/4	2-31/64
	20	ZRLKL-▲-20-*	8-3/8	9	2-3/4	3-1/32
	C20	ZRLKL-▲-C20-*	8-7/8	9-1/2	2-3/4	3-1/32
	24	ZRLKL-▲-24-*	8-7/8	9-1/2	3-1/4	3-9/16
	C24	ZRLKL-▲-C24-*	9-3/8	10	3-1/4	3-9/16
	28	ZRLKL-▲-28-*	9-1/8	9-3/4	3-3/4	4-1/16
	C28	ZRLKL-▲-C28-*	9-5/8	10-1/4	3-3/4	4-1/16

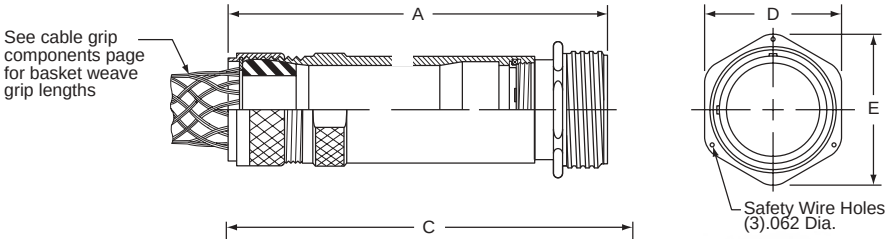

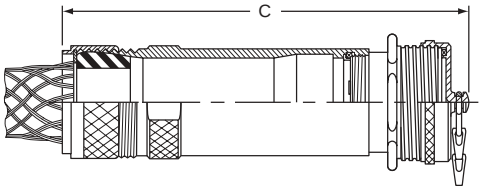

To specify receptacle with threaded environmental cover, change third letter in Part No. "L" to "E".
Example: ZRLK changes to ZREK.

OIL-RESISTANT RUBBER GROMMETS—SYMBOL NUMBERS OF SIZES AVAILABLE
Substitute the symbol number for the Delta ▲ in the catalog number of plug.
Example: ZRLK-▲-12-* for .500 to .625 Dia. cable changes to ZRLK-10 12-*

Cable Dia.	Shell 12	Shell 16	Shells 20 & C20	Shells 24 & C24	Shells 28 & C28	Cable Dia.	Shell 12	Shell 16	Shell 20 & C20	Shells 24 & C24	Shells 28 & C28
.062 to .125	02	–	–	–	–	1.500 to 1.625	–	–	26	26	26
.125 to .250	04	–	–	–	–	1.625 to 1.750	–	–	28	28	28
.250 to .375	06	06	–	–	–	1.750 to 1.875	–	–	30	30	30
.375 to .500	08	08	–	–	–	1.875 to 1.937	–	–	31	–	–
.500 to .625	10	10	10	–	–	1.875 to 2.000	–	–	–	32	32
.625 to .750	12	12	12	–	–	2.000 to 2.125	–	–	–	34	34
.750 to .875	14	14	14	–	–	2.125 to 2.250	–	–	–	36	36
.875 to .937	15	–	–	–	–	2.250 to 2.375	–	–	–	38	38
.875 to 1.000	–	16	16	16	–	2.375 to 2.437	–	–	–	39	–
1.000 to 1.125	–	18	18	18	–	2.437 to 2.500	–	–	–	–	40
1.125 to 1.250	–	20	20	20	–	2.500 to 2.625	–	–	–	–	42
1.250 to 1.375	–	22	22	22	–	2.625 to 2.750	–	–	–	–	44
1.375 to 1.437	–	23	–	–	–	2.750 to 2.875	–	–	–	–	46
1.375 to 1.500	–	–	24	24	24						

Amphenol INDUSTRIAL

In-Line Receptacle

With Conduit Adapter

(for flexible conduit fittings)

Types
ZRLT ZRET

To specify a complete receptacle, substitute the dash no. of the contact insert selected, for the asterisk (*) in the catalog no. below.
To specify receptacle with threaded environmental cover, change third letter in part no. “L” to “E”.

Shell Size	Size Conduit	Cat. No.	Dimensions				
			A	B	C	D	E
12	3/4	ZRLT-2 12-*	4-1/4	3/4	4-7/8	1-3/8	1-61/64
16	1-1/4	ZRLT-4 16-*	4-3/8	1-1/4	5	2-1/4	2-15/32
20	1-1/2	ZRLT-5 20-*	4-1/2	1-1/2	5-1/8	2-3/4	3-1/32
C20	1-1/2	ZRLT-5 C20-*	5	1-1/2	5-5/8	2-3/4	3-1/32
24	2	ZRLT-6 24-*	4-5/8	2	5-1/4	3-1/4	3-9/16
C24	2	ZRLT-6 C24	5-1/8	2	5-3/4	3-1/4	3-9/16
28	2-1/2	ZRLT-7 28-*	5-3/32	2-1/2	5-23-32	3-3/4	4-1/16
C28	2-1/2	ZRLT-7 C28-*	5-19/32	2-1/2	6-7/32	3-3/4	4-1/16

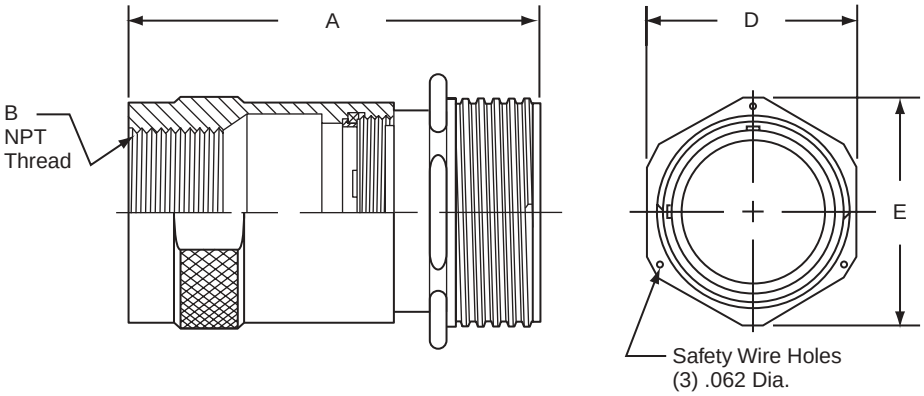

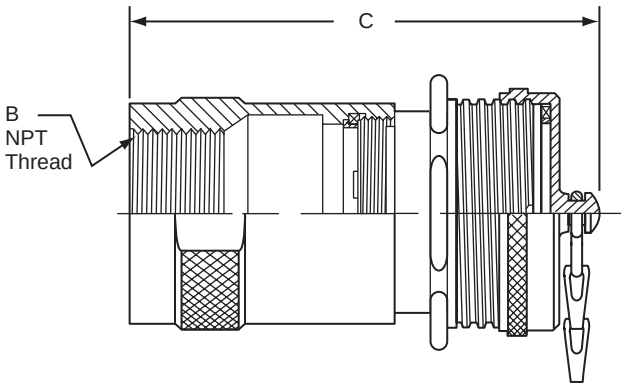

To specify receptacle with threaded environmental cover, change third letter in Part No. “L” to “E”.
Example: ZRLT changes to ZRET.

Square Flange Receptacle

To specify a complete receptacle, substitute the dash no. of the contact insert selected, for the asterisk (*) in the catalog no. below.

Types
_RLP _RCP _REP

For Star-Line series add a "**Z**" to the beginning of catalog no. (Ex. ZRLP).
For Star-Lok series add an "**S**" to the beginning of catalog no. (Ex. SRLP).

Shell Size	Open Back	Catalog No.	DIMENSIONS WITH STANDARD CABLE ADAPTER									
			A	B	C*	E	F	G	J	K	L	N
12	Use with	_RLP- 12-*	1-3/4	1-3/8	1-1/12	11/64	2-15/16	2-1/8	1	1-11/32	2-15/16	1/4
16	or without	_RLP- 16-*	2-1/4	1-11/16	2	13/64	2-15/16	2-1/8	1	1-27/32	2-21/64	1/4
20	Potting	_RLP- 20-*	2-3/4	2-3/32	2-1/2	7/32	2-15/16	2-3/16	1	2-11/32	2-21/64	1/4
C20	Sleeves	_RLP- C20-*	2-3/4	2-3/32	2-1/2	7/32	2-7/16	2-11/16	1-1/2	2-11/32	2-53/64	3/4
24		_RLP- 24-*	3-1/4	2-17/32	3	9/32	2-15/16	2-3/16	1	2-27/32	2-21/64	1/4
C24		_RLP- C24-*	3-1/4	2-17/32	3	9/32	2-7/16	2-11/16	1-1/2	2-27/32	2-53/64	3/4
28		ZRLP- 28-*	3-3/4	3-1/32	3-1/2	11/32	2-15/16	2-3/16	1	3-11/32	2-21/64	1/4
C28		ZRLP- C28*	3-3/4	3-1/32	3-1/2	11/32	2-7/16	2-11/16	1-1/2	3-11/32	2-53/64	3/4

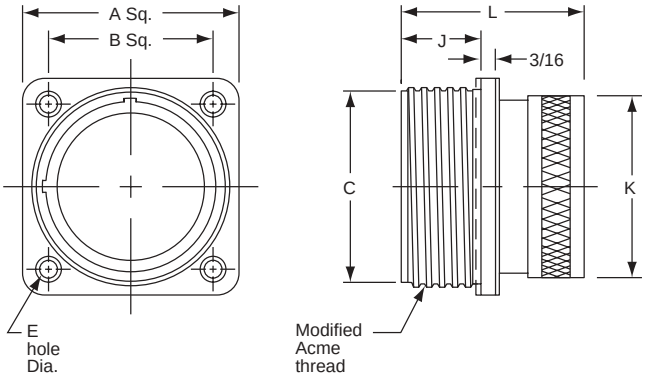

WITH THREADED ENVIRONMENTAL COVER AND SASH CHAIN

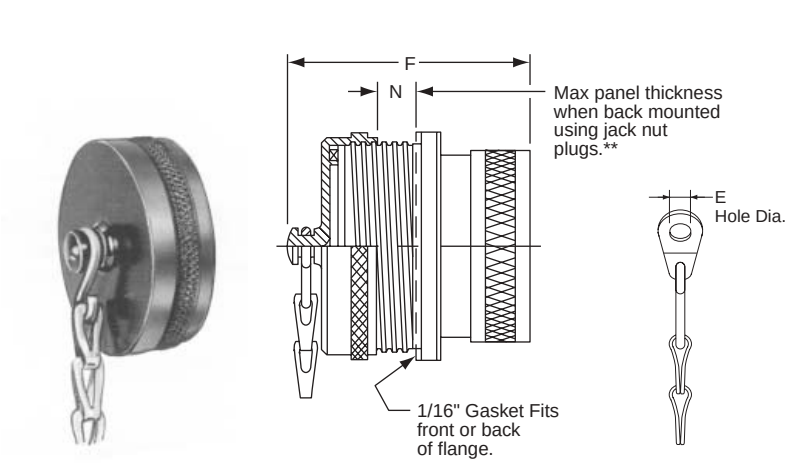

To specify receptacle with threaded environmental cover, change third letter in part number from "L" to "E". Example: _RLP changes to _REP.

WITH HINGED SPRING COVER

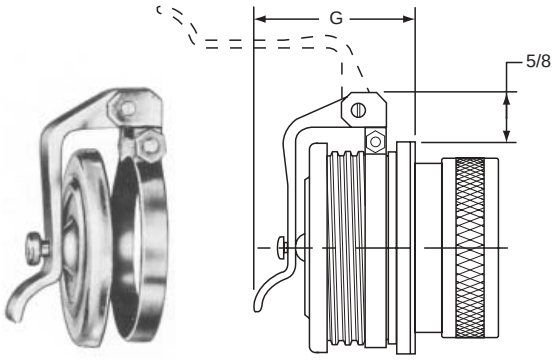

To specify receptacle with spring door cover, change third letter in part number from "L" to "C". Example: _RLP changes to _RCP.

Drill hole in panel 1/64" larger than Dimension "K" for front mounting or dimension "C" for back mounting
**Maximum panel thickness may be increased 1/8" when using Standard Coupling Nut Plugs.

Amphenol INDUSTRIAL

Square Flange Receptacle with Mechanical Clamp Nut

Type
_RLPM _RCPM _REPM

To specify a complete receptacle, substitute the dash no. of the contact insert selected, for the asterisk (*) in the catalog no. below.

For Star-Line series add a "**Z**" to the beginning of catalog no. (Ex. ZRLP).
For Star-Lok series add an "**S**" to the beginning of catalog no. (Ex. SRLP).

Size Cable	Shell Size	Catalog Number	Dimensions A	B	C	D	E	F	G	H	N
Select from Table Below and Substitute Symbol No. for Delta ▲	12	_RLPM-▲- 12-*	5-3/8	1-3/4	6	1-3/8	11/64	1-3/4	2-3/8	1-1/2	1/4
	16	_RLPM-▲- 16-*	5-5/8	2-1/4	6-1/4	1-11/16	13/64	2-1/4	3	2	1/4
	20	_RLPM-▲- 20-*	6-1/8	2-3/4	6-3/4	2-3/32	7/32	2-3/4	3-3/4	2-1/2	1/4
	C20	_RLPM-▲- C20-*	6-5/8	2-3/4	7-1/4	2-3/32	7/32	2-3/4	3-3/4	2-1/2	3/4
	24	_RLPM-▲- 24-*	6-5/8	3-1/4	7-1/4	2-17/32	9/32	3-1/4	4-1/2	3	1/4
	C24	_RLPM-▲- C24-*	7-1/8	3-1/4	7-3/4	2-17/32	9/32	3-1/4	4-1/2	3	3/4
	28	_RLPM-▲- 28-*	7-1/8	3-3/4	7-3/4	3-1/32	11/32	3-3/4	5-1/8	3-1/2	1/4
	C28	_RLPM-▲- C28-*	7-5/8	3-3/4	8-1/4	3-1/32	11/32	3-3/4	5-1/8	3-1/2	3/4
			With Long Cable Adapter								
	12	_RLPML-▲-12-*	7-5/8	1-3/4	1-3/4	1-3/8	11/64	1-3/4	2-3/8	1-1/2	1/4
	16	_RLPML-▲-16-*	7-7/8	2-1/4	2-1/4	1-11/16	13/64	2-1/4	3	2	1/4
	20	_RLPML-▲-20-*	8-3/8	2-3/4	2-3/4	2-3/32	7/32	2-3/4	3-3/4	2-1/2	1/4
	C20	_RLPML-▲-C20-*	8-7/8	2-3/4	2-3/4	2-3/32	7/32	2-3/4	3-3/4	2-1/2	3/4
	24	_RLPML-▲-24-*	8-7/8	3-1/4	3-1/4	2-17/32	9/32	3-1/4	4-1/2	3	1/4
	C24	_RLPML-▲-C24-*	9-3/8	3-1/4	3-1/4	2-17/32	9/32	3-1/4	4-1/2	3	3/4
	28	_RLPML-▲-28-*	9-1/8	3-3/4	3-3/4	3-1/32	11/32	3-3/4	5-1/8	3-1/2	1/4
	C28	_RLPML-▲-C28-*	9-5/8	3-3/4	3-3/4	3-1/32	11/32	3-3/4	5-1/8	3-1/2	3/4

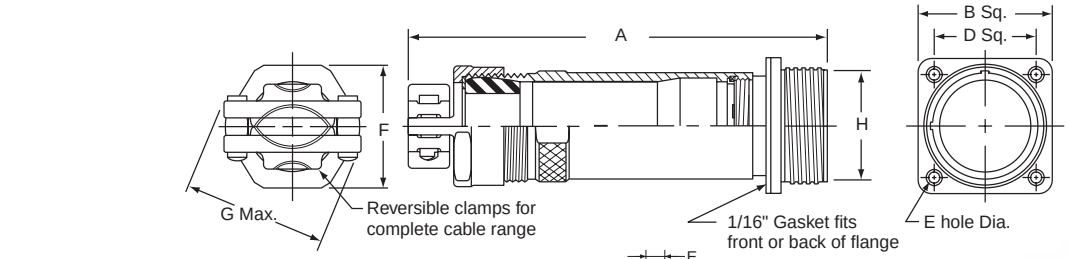

Drill hole in panel 1/64" larger than Dimension "H" for back mounting..

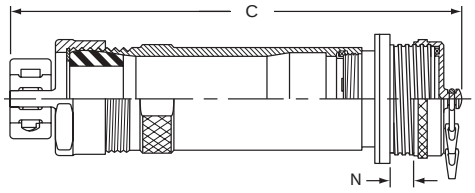

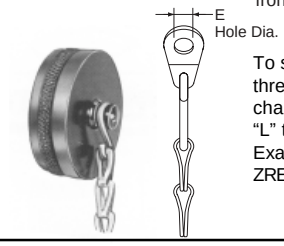

To specify receptacle with threaded environmental cover, change third letter in Part No. "L" to "E". Example: ZRLPM changes to ZREPM.

To specify receptacle with spring door cover, change third letter in Part No. "L" to "C". Example: ZRLPM changes to ZRCPM.

OIL-RESISTANT RUBBER GROMMETS—SYMBOL NUMBERS OF SIZES AVAILABLE
Substitute the symbol number for the Delta ▲ in the catalog number of plug.
Example: ZRLK-▲-12-* for .500 to .625 Dia. cable changes to ZREK-10 12-*

Cable Dia.	Shell 12	Shell 16	Shells 20 & C20	Shells 24 & C24	Shells 28 & C28	Cable Dia.	Shell 12	Shell 16	Shell 20 & C20	Shells 24 & C24	Shells 28 & C28
.062 to .125	02	–	–	–	–	1.500 to 1.625	–	–	26	26	26
.125 to .250	04	–	–	–	–	1.625 to 1.750	–	–	28	28	28
.250 to .375	06	06	–	–	–	1.750 to 1.875	–	–	30	30	30
.375 to .500	08	08	–	–	–	1.875 to 1.937	–	–	31	–	–
.500 to .625	10	10	10	–	–	1.875 to 2.000	–	–	–	32	32
.625 to .750	12	12	12	–	–	2.000 to 2.125	–	–	–	34	34
.750 to .875	14	14	14	–	–	2.125 to 2.250	–	–	–	36	36
.875 to .937	15	–	–	–	–	2.250 to 2.375	–	–	–	38	38
.875 to 1.000	–	16	16	16	–	2.375 to 2.437	–	–	–	39	–
1.000 to 1.125	–	18	18	18	–	2.437 to 2.500	–	–	–	–	40
1.125 to 1.250	–	20	20	20	–	2.500 to 2.625	–	–	–	–	42
1.250 to 1.375	–	22	22	22	–	2.625 to 2.750	–	–	–	–	44
1.375 to 1.437	–	23	–	–	–	2.750 to 2.875	–	–	–	–	46
1.375 to 1.500	–	–	24	24	24						

Receptacle Mounted to Junction Box

With Angle Adapter

Types
_RLBB _RCBB _REBB

To specify a complete receptacle, substitute the dash no. of the contact insert selected, for the asterisk (*) in the catalog no. below.

For Star-Line series add a "**Z**" to the beginning of catalog no. (Ex. ZRLBB).
For Star-Lok series add an "**S**" to the beginning of catalog no. (Ex. SRLBB).

Shell Size	Hub Size†	Cat. No.	Dimensions A	B	C	D	E	F	G	H
12	3/4	_RLBB- 2 12-*	5-1/4	4-5/8	4-3/16	3-9/16	2-3/8	2-13/16	2-7/16	9/32
	1	_RLBB-3 12-*	5-1/4	4-5/8	4-3/16	3-9/16	2-3/8	2-13/16	2-7/16	9/32
16	1	_RLBB-3 16-*	5-1/4	4-5/8	4-3/16	3-9/16	2-3/8	2-15/16	2-17/32	9/32
	1-1/4	_RLBB-4 16-*	5-1/4	4-5/8	4-3/16	3-9/16	2-5/8	2-15/16	2-17/32	9/32
	1-1/2	_RLBB-5 16-*	5-1/4	4-5/8	4-3/16	3-9/16	2-5/8	2-15/16	2-17/32	9/32
20	1-1/4	_RLBB-4 20-*	6	5-1/4	4-1/2	3-7/8	3-3/4	3-39/64	3	9/32
	1-1/2	_RLBB-5 20-*	6	5-1/4	4-1/2	3-7/8	3-3/4	3-39/64	3	9/32
	2	RLBB-6 20-*	6	5-1/4	4-1/2	3-7/8	3-3/4	3-39/64	3	9/32
C20	1-1/4	_RLBB-4 C20-*	6	5-1/4	4-1/2	3-7/8	3-3/4	3-39/64	3-3/8	9/32
	1-1/2	_RLBB-5 C20-*	6	5-1/4	4-1/2	3-7/8	3-3/4	3-39/64	3-3/8	9/32
	2	_RLBB-6 C20-*	6	5-1/4	4-1/2	3-7/8	3-3/4	3-39/64	3-3/8	9/32
24	2-1/2	_RLBB-7 24-*	See Drawing Below		8	7	3-3/4	3-33/64	2-19/64	7/16
	3	RLBB-8 24-*			8	7	4-1/2	3-33/64	2-19/64	7/16
C24	2-1/2	_RLBB-7 C24-*			8	7	3-3/4	3-33/64	2-21-32	7/16
	3	_RLBB-8 C24-*			8	7	4-1/2	3-33-64	2-21-32	7/16
28	2-1/2	ZRLBB-7 28-*			8	7	3-3/4	3-1/2	2-7/64	7/16
	3	ZRLBB-8 28-*			8	7	4-1/2	3-1/2	2-7/64	7/16
C28	2-1/2	ZRLBB-7 C28-*			8	7	3-3/4	3-1/2	2-15/32	7/16
	3	ZRLBB-8 C28-*			8	7	4-1/2	3-1/2	2-15/32	7/16

† Other hub sizes are available. Consult Amphenol Industrial Operations.

SHELL SIZES 12 - 16 - 20 - C20

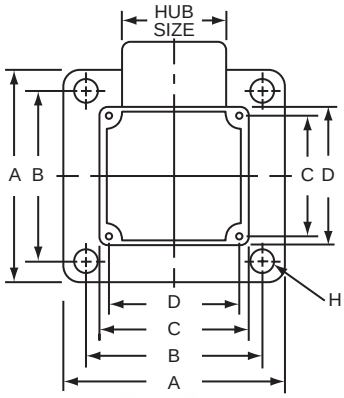

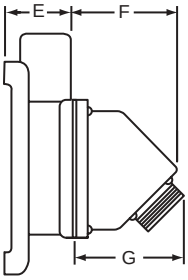

SHELL SIZES 24 - C24 - 28 - C28

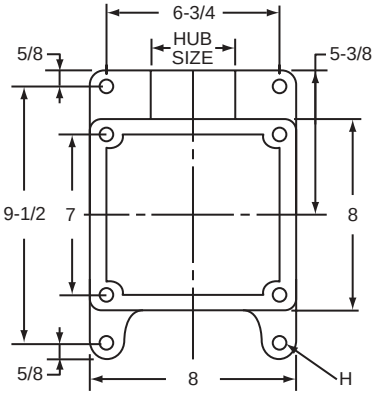

WITH HINGED SPRING COVER

To specify receptacle with spring door cover, change third letter in part number from "L" to "C". Example: _RLBB changes to _RCBB.

WITH THREADED ENVIRONMENTAL COVER AND SASH CHAIN

To specify receptacle with threaded environmental cover, change third letter in part number from "L" to "E". Example: _RLBB changes to _REBB.

Amphenol INDUSTRIAL

Receptacle Mounted to Junction Box

With Straight Adapter

To specify a complete receptacle, substitute the dash no. of the contact insert selected, for the asterisk (*) in the catalog no. below.

For Star-Line series add a “Z” to the beginning of catalog no. (Ex. ZRLA).
For Star-Lok series add an “S” to the beginning of catalog no. (Ex. SRLA).

Types
_RLA _RCA _REA

Shell Size	Hub Size†	Cat. No.	Dimensions A	B	C	D	E	F	G	H
12	3/4	_RLA- 2 12-*	5-1/4	4-5/8	4-3/16	3-9/16	2-3/8	1-27/32	1	9/32
	1	_RLA-3 12-*	5-1/4	4-5/8	4-3/16	3-9/16	2-3/8	1-27/32	1	9/32
16	1	_RLA-3 16-*	5-1/4	4-5/8	4-3/16	3-9/16	2-3/8	1-27/32	1	9/32
	1-1/4	_RLA-4 16-*	5-1/4	4-5/8	4-3/16	3-9/16	2-5/8	1-27/32	1	9/32
	1-1/2	_RLA-5 16-*	5-1/4	4-5/8	4-3/16	3-9/16	2-5/8	1-27/32	1	9/32
20	1-1/4	_RLA-4 20-*	6	5-1/4	4-1/2	3-7/8	3-3/4	3-1/16	1-7/32	9/32
	1-1/2	_RLA-5 20-*	6	5-1/4	4-1/2	3-7/8	3-3/4	3-1/16	1-7/32	9/32
	2	RLA-6-20-*	6	5-1/4	4-1/2	3-7/8	3-3/4	3-1/16	1-7/32	9/32
C20	1-1/4	_RLA-4 C20-*	6	5-1/4	4-1/2	3-7/8	3-3/4	2-9/16	1-7/32	9/32
	1-1/2	_RLA-5 C20-*	6	5-1/4	4-1/2	3-7/8	3-3/4	2-9/16	1-7/32	9/32
	2	_RLA-6 C20-*	6	5-1/4	4-1/2	3-7/8	3-3/4	2-9/16	1-7/32	9/32
24	2-1/2	_RLA-7 24-*	See Drawing Below		8	7	3-3/4	2-11/32	1-1/2	7/16
	3	RLA-8 24-*			8	7	4-1/2	2-11/32	1-1/2	7/16
C24	2-1/2	_RLA-7 C24-*			8	7	3-3/4	2-27/32	1-1/2	7/16
	3	_RLA-8 C24-*			8	7	4-1/2	3-33-64	1-1/2	7/16
28	2-1/2	ZRLA-7 28-*			8	7	3-3/4	2-27/32	1-1/2	7/16
	3	ZRLA-8 28-*			8	7	4-1/2	2-9/32	1-1/2	7/16
C28	2-1/2	ZRLA-7 C28-*			8	7	3-3/4	2-25/32	1-1/2	7/16
	3	ZRLA-8 C28-*			8	7	4-1/2	2-25/32	1-1/2	7/16

† Other hub sizes are available. Consult Amphenol Industrial Operations.

SHELL SIZES 12 - 16 - 20 - C20

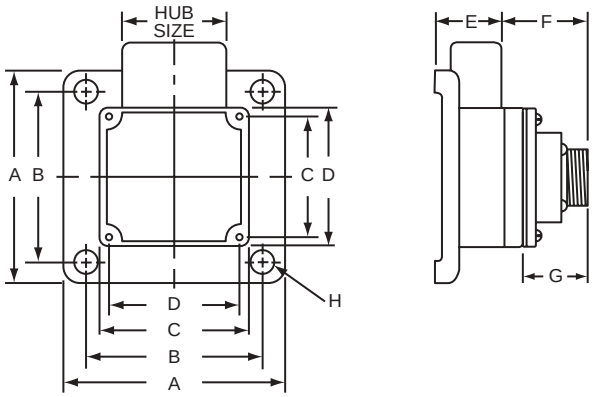

SHELL SIZES 24 - C24 - 28 - C28

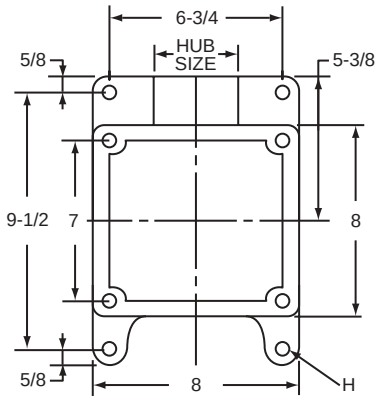

WITH HINGED SPRING COVER

To specify receptacle with spring door cover, change third letter in part number from “L” to “C”. Example: _RLA changes to _RCA.

WITH THREADED ENVIRONMENTAL COVER AND SASH CHAIN

To specify receptacle with threaded environmental cover, change third letter in part number from “L” to “E”. Example: _RLA changes to _REA.

Code Logic
Star-Line EX

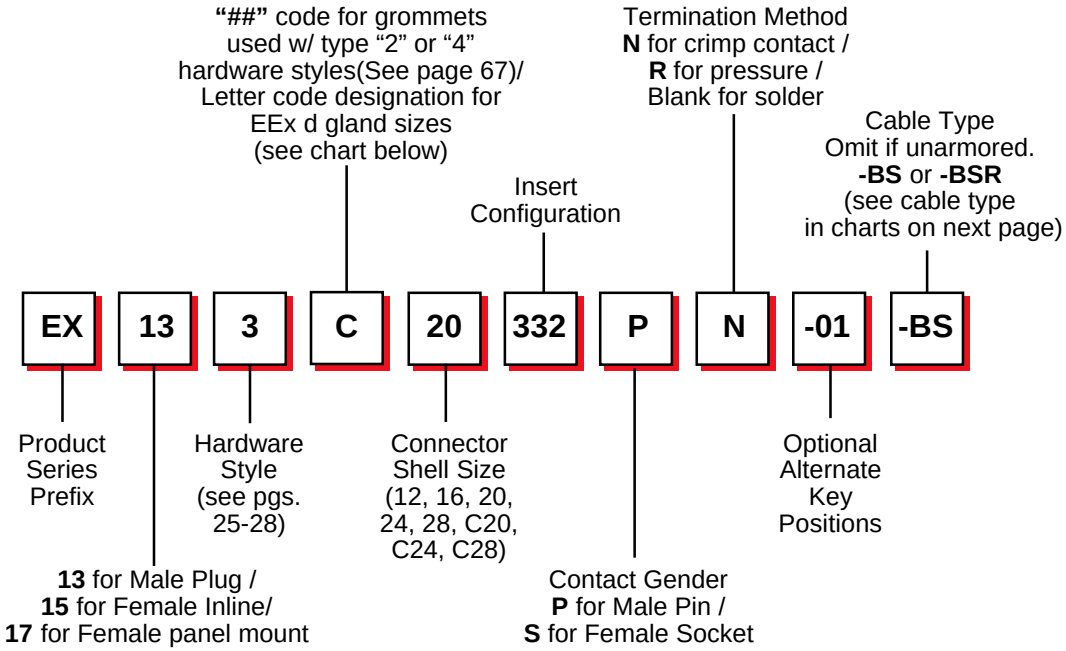

Example:

EX-13-3-C-20-332PN
Male Plug with EEX gland for a cable with 0.95" 24.1mm O.D., 20ea #12/4.0mm male contacts

EX-15-4-1620-332SN
Female Inline with basket weave grip for a cable with 0.95" 24.1mm O.D., 20ea #12/4.0mm female contacts

EX-17-1-20-332SN
Female Panel Mount, 20ea #12/4.0mm female contacts.

EX-13-3-C-16-22PR-BA
Male Plug with EEX gland for an armored cable with 1.25"/31.75mm O.D., 4ea #4/25.0mm male contacts

EX-17-3-C-16-22SR-BS
Female Panel Mount with cable adapter with and EEX gland for an armored and sheathed cable

RoHS COMPLIANT PRODUCT AVAILABLE – Consult Amphenol Industrial Operations.

The items in this catalog have been reviewed and approved by Amphenol's authorized person, as required in Directive 94/9/EC of the ATEX specification.

EEx d Cable Types

EEx d Cable Gland Size Code	Unarmored Cable No deviation if Unarmored		Armored & Sheathed Cable -BS				Armored & Sheathed with reduced bore -BSR	
			UA		Standard		OD-Reduced	
	Min	Max	Min	Max	Min	Max	Min	Max
A1	.1575 (4.0)	.3307 (8.4)	.1339 (3.4)	.3307 (8.4)	.3543 (9.0)	.5315 (13.5)	.2638 (6.7)	.4055 (10.3)
A2	.2835 (7.2)	.4606 (11.7)	.2835 (7.2)	.4606 (11.7)	.4528 (11.5)	.6299 (16.0)	.3701 (9.4)	.4921 (12.5)
A	.3780 (9.6)	.5512 (14.0)	.3701 (9.4)	.5512 (14.0)	.6102 (15.5)	.8307 (21.1)	.4724 (12.0)	.6929 (17.6)
B	.5315 (13.5)	.7874 (20.0)	.5315 (13.5)	.7874 (20.0)	.7992 (20.3)	1.079 (27.4)	.6614 (16.8)	.9409 (23.9)
C	.7677 (19.5)	1.035 (26.3)	.7677 (19.5)	1.035 (26.3)	1.051 (26.7)	1.339 (34.0)	.9134 (23.2)	1.201 (30.5)
C2	.9055 (23.0)	1.268 (32.2)	.9055 (23.0)	1.268 (32.2)	1.299 (33.0)	1.598 (40.6)	1.126 (28.6)	1.425 (36.2)
D	1.110 (28.2)	1.504 (38.2)	1.106 (28.1)	1.504 (38.2)	1.551 (39.4)	1.839 (46.7)	1.370 (34.8)	1.669 (42.4)
D2	1.307 (33.2)	1.736 (44.1)	1.303 (33.1)	1.736 (44.1)	1.799 (45.7)	2.094 (53.2)	1.618 (41.1)	1.909 (48.5)
E	1.547 (39.3)	1.972 (50.1)	1.543 (39.2)	1.969 (50.0)	2.051 (52.1)	2.343 (59.5)	1.870 (47.5)	2.157 (54.8)
E2	1.839 (46.7)	2.205 (56.0)	1.839 (46.7)	2.205 (56.0)	2.299 (58.4)	2.591 (65.8)	2.118 (53.8)	2.409 (61.2)
F	2.059 (52.3)	2.441 (62.0)	2.051 (52.1)	2.441 (62.0)	2.551 (64.8)	2.843 (72.2)	2.370 (60.2)	2.677 (68.0)
F2	2.287 (58.1)	2.677 (68.0)	2.283 (58.0)	2.677 (68.0)	2.799 (71.1)	3.071 (78.0)	2.618 (66.5)	2.890 (73.4)
G	2.453 (62.3)	2.835 (72.0)	2.449 (62.2)	2.835 (72.0)	3.031 (77.0)	3.307 (84.0)	–	

Amphenol offers an extensive line of explosion proof and general duty cable glands. Consult Amphenol Industrial Operations and ask for new catalog 12-055, Amphenol Cable Glands and Cord Grips.

Star-Line EX Plug with EX Gland

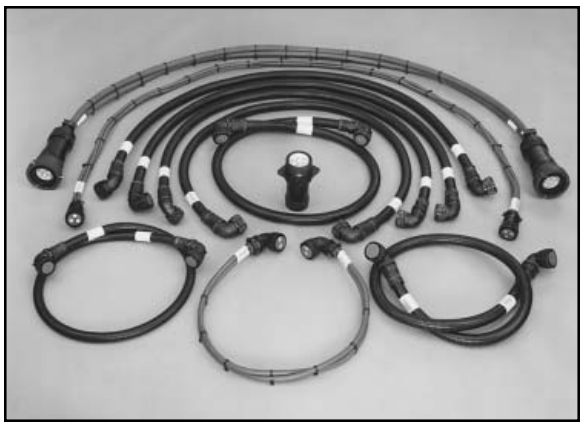

Cables can be designed with a custom overmold to any Amphenol cylindrical connector for any industrial application. Consult Amphenol Industrial Operations for further information.

Hardware

Plug with Mechanical Clamp — EX-13-2 Style

Dimension Shell	A	B	C	D	E	F
12	8-3/4 (222.3)	1-3/4 (44.5)	1-1/2 (38.1)	2 (50.8)	15/16 (23.8)	2-3/8 (60.3)
16	8-13/16 (223.8)	1-3/4 (44.5)	2 (50.8)	2-1/16 (52.4)	1-7/16 (36.5)	3 (76.2)
20	8-7/8 (225.4)	1-3/4 (44.5)	2-1/2 (63.5)	2-18 (54.0)	1-15/16 (49.2)	3-3/4 (95.3)
24	8-15/16 (227.0)	1-3/4 (44.5)	3 (76.2)	2-3/16 (55.6)	2-7/16 (61.9)	4-1/2 (114.3)
28	9 (228.6)	3 1/16 (77.8)	4 3/16 (106.4)	2 1/4 (57.2)	2-7/8 (73.0)	5-1/8 (130.2)

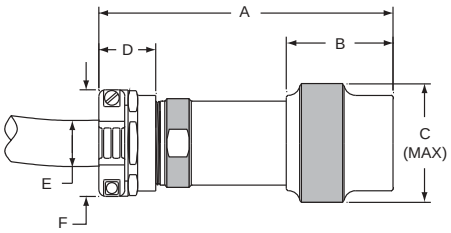

Plug with EEx d Gland — EX-13-3 Style

Note: Dimensions “D” and “E” are controlled by the gland manufacturer, gland is included with the connector.

POTTING IS NOT REQUIRED

Dimension Shell	A	B	C*
12	7-5/8 (193.7)	1-3/4 (44.5)	1-1/2 (38.1)
16	7-5/8 (193.7)	1-3/4 (44.5)	2 (50.8)
20	7-5/8 (193.7)	1-3/4 (44.5)	2-1/2 (63.5)
24	7-5/8 (193.7)	1-3/4 (44.5)	3 (76.2)
28	7-5/8 (193.7)	1-3/4 (44.5)	3-1/2 (88.9)

*Notes: For “C” length inserts, add 1/2” to both dimensions “A” & “B”.

‘D’ Dimension varies according to cable gland. Detailed cable dimensions and type required.

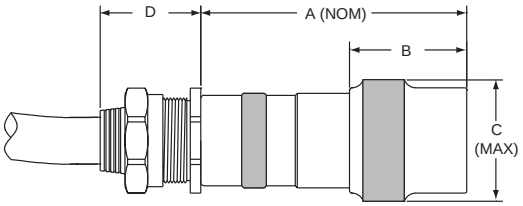

Plug with Basketweave Cable Grip — EX-13-4 Style

Dimension Shell	A	B	C	D	E	F	G
12	7-3/8 (187.3)	1-3/4 (44.5)	1-1/2 (38.1)	1-1/4 (31.8)	15/16 (23.8)	1-1/2 (38.1)	8 (203.2)
16	7-3/8 (187.3)	1-3/4 (44.5)	2 (50.8)	1-1/4 (31.8)	1-7/16 (36.5)	2 (50.8)	10-1/2 (266.7)
20	7-3/8 (187.3)	1-3/4 (44.5)	2-1/2 (63.5)	1-1/4 (31.8)	1-15/16 (49.2)	2-1/2 (63.5)	14-1/2 (368.3)
24	7-3/8 (187.3)	1-3/4 (44.5)	3 (76.2)	1-1/4 (31.8)	2-7/16 (61.9)	3 (76.2)	17-1/2 (444.5)
26	7-3/8 (187.3)	1-3/4 (44.5)	3-1/2 (88.9)	1-1/4 (31.8)	2-7/8 (73.0)	3-1/2 (88.9)	19 (482.6)

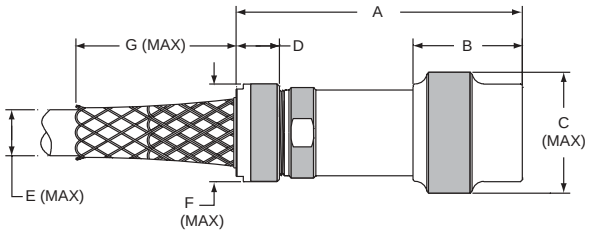

In-line Receptacle with Mechanical Clamp — EX-15-2 Style

Dimension Shell	A	B	C	D	E	F
12	8-3/4 (222.3)	1-3/4 (44.5)	1-1/2 (38.1)	2 (50.8)	15/16 (23.8)	2-3/8 (60.3)
16	8-13/16 (223.8)	1-3/4 (44.5)	2 (50.8)	2-1/16 (52.4)	1-7/16 (36.5)	3 (76.2)
20	8-7/8 (225.4)	1-3/4 (44.5)	2-1/2 (63.5)	2-1/8 (54.0)	1-15/16 (49.2)	3-3/4 (95.3)
24	8-15/16 (227.0)	1-3/4 (44.5)	3 (76.2)	2-3/16 (55.6)	2-7/16 (61.9)	4-1/2 (114.3)
28	9 (228.6)	1-3/4 (44.5)	3-1/2 (88.9)	2-1/4 (57.2)	2-7/8 (73.0)	5-1/8 (130.2)

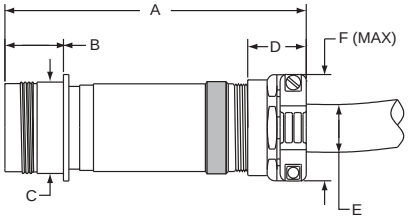

In-line Receptacle with EEx d Gland — EX-15-3 Style

POTTING IS NOT REQUIRED

Dimension Shell	A	B	C*
12	7-5/8 (193.7)	1-3/4 (44.5)	1-1/2 (38.1)
16	7-5/8 (193.7)	1-3/4 (44.5)	2 (50.8)
20	7-5/8 (193.7)	1-3/4 (44.5)	2-1/2 (63.5)
24	7-5/8 (193.7)	1-3/4 (44.5)	3 (76.2)
28	7-5/8 (193.7)	1-3/4 (44.5)	3-1/2 (88.9)

*Notes: For “C” length inserts, add 1/2” to both dimensions “A” & “B”.
‘D’ Dimension varies according to cable gland.
Detailed cable dimension and type required.

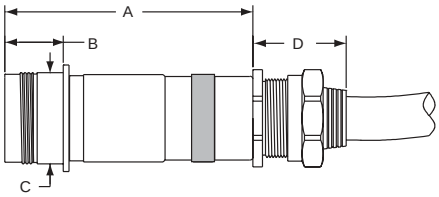

In-line Receptacle with Basketweave Cable Grip — EX-15-4 Style

Dimension Shell	A	B	C	D	E	F	G
12	7-3/8 (187.3)	1-3/4 (44.5)	1-1/2 (38.1)	1-1/4 (31.8)	15/16 (23.8)	1-1/2 (38.1)	8 (203.2)
16	7-3/8 (187.3)	1-3/4 (44.5)	2 (50.8)	1-1/4 (31.8)	1-7/16 (36.5)	2 (50.8)	10-1/2 (266.7)
20	7-3/8 (187.3)	1-3/4 (44.5)	2-1/2 (63.5)	1-1/4 (31.8)	1-15/16 (49.2)	2-1/2 (63.5)	14-1/2 (368.3)
24	7-3/8 (187.3)	1-3/4 (44.5)	3 (76.2)	1-1/4 (31.8)	2-7/16 (61.9)	3 (76.2)	17-1/2 (444.5)
28	7-3/8 (187.3)	1-3/4 (44.5)	3-1/2 (88.9)	1-1/4 (31.8)	2-7/8 (73.0)	3-1/2 (88.9)	19 (482.6)

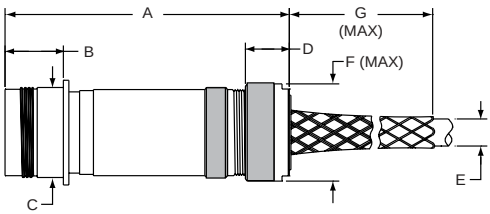

Panel Mount Receptacle (Potting Required) — EX-17-1 Style

Dimension Shell	A	B	C	D	E	F
12	4-3/4 (120.7)	1-3/4 (44.5)	1-1/2 (38.1)	1.654 (42)	2-1/4 (57.2)	M25
16	4-3/4 (120.7)	1-3/4 (44.5)	2 (50.8)	2.047 (52)	2-5/8 (66.7)	M40
20	4-3/4 (120.7)	1-3/4 (44.5)	2-1/2 (63.5)	2.441 (62)	3 (76.2)	M50
24	4-3/4 (120.7)	1-3/4 (44.5)	3 (76.2)	2.835 (72)	3-1/2 (88.9)	M63
28	4-3/4 (120.7)	1-3/4 (44.5)	3-1/2 (88.9)	3.228 (82)	4 (101.6)	M75

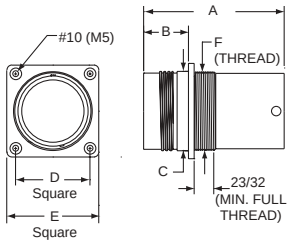

Fixed In-Line Receptacle with Mechanical Clamp — EX-17-2 Style

Dimension Shell	A	B	C	D	E	F
12	8-3/4 (222.3)	1-3/4 (44.5)	1-1/2 (38.1)	2 (50.8)	5/16 (23.8)	2-3/8 (60.3)
16	8-13/16 (223.8)	1-3/4 (44.5)	2 (50.8)	2-1/16 (52.4)	1-7/16 (36.5)	3 (76.2)
20	8-7/8 (225.4)	1-3/4 (44.5)	2-1/2 (63.5)	2-1/8 (54.0)	1-15/16 (49.2)	3-3/4 (95.3)
24	8-15/16 (227.0)	1-3/4 (44.5)	3 (76.2)	2-3/16 (55.6)	2-7/16 (61.9)	4-1/2 (114.3)
28	9 (228.6)	1-3/4 (44.5)	3-1/2 (88.9)	2-1/4 (57.2)	2-7/8 (73.0)	5-1/8 (130.2)

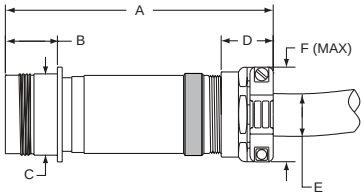

Fixed In-Line Receptacle with EEx d Gland — EX-17-3 Style

Dimension Shell	A	B	C*
12	7-5/8 (193.7)	1-3/4 (44.5)	1-1/2 (38.1)
16	7-5/8 (193.7)	1-3/4 (44.5)	2 (50.8)
20	7-5/8 (193.7)	1-3/4 (44.5)	1-/12 (63.5)
24	7-5/8 (193.7)	1-3/4 (44.5)	3 (76.2)
28	7-5/8 (193.7)	1-3/4 (44.5)	3-1/2 (88.9)

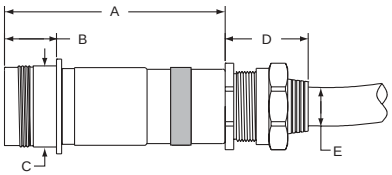

*Notes: For “C” length inserts, add 1/2” to both dimensions “A” & “B”.

‘D’ Dimension varies according to cable gland. Detailed cable dimension and type required.

Fixed In-Line Receptacle with Basketweave Cable Grip — EX-17-4 Style

Dimension Shell	A	B	C	D	E	F	G
12	7-3/8 (187.3)	1-3/4 (44.5)	1-1/2 (38.1)	1-1/4 (31.8)	15/16 (23.8)	1-1/2 (38.1)	8 (203.2)
16	7-3/8 (187.3)	1-3/4 (44.5)	2 (50.8)	1-1/4 (31.8)	1-7/16 (36.5)	2 (50.8)	10-1/2 (266.7)
20	7-3/8 (187.3)	1-3/4 (44.5)	2-1/2 (63.5)	1-1/4 (31.8)	1-15/16 (49.2)	2-1/2 (63.5)	14-1/2 (368.3)
24	7-3/8 (187.3)	1-3/4 (44.5)	3 (76.2)	1-1/4 (31.8)	2-7/16 (61.9)	3 (76.2)	17-1/2 (444.5)
28	7-3/8 (187.3)	1-3/4 (44.5)	3-1/2 (88.9)	1-1/4 (31.8)	2-7/8 (73.0)	3-1/2 (88.9)	19 (482.6)

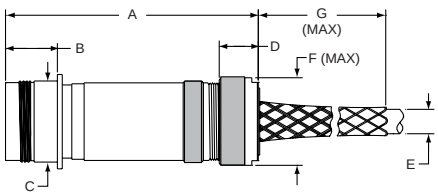

Insert Configuration Listing

For Amphenol®/ Pyle® Star-Line, Star-Lok and Star-Line EX Connectors

Introduction

The Amphenol/Pyle Star-Line Insert Configuration Listing is issued primarily to identify various contact insert arrangements. For the engineer, it provides visual selection of the insert configuration needed to satisfy his requirements. For the end user, the list provides general information useful in the termination of plugs and receptacles. To aid the reader, the insert configurations are presented in numerical order, based on the number of contacts in each.

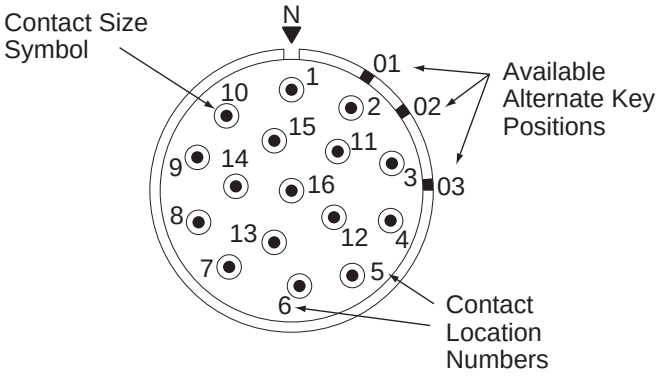

The male insert illustration shown left (and those on the following pages) is shown as it appears when viewed from the front. Contacts are shown by both physical position within the configuration and by contact number. The contact number corresponds to the contact position shown on the rear face of the insert illustrated as well as to both the front and rear faces of the mating insert. The symbol used to show contact location is indicative of contact size. For example, the contact symbol in this illustration represents a #8 contact. An explanation of contact symbols is presented on each page of the listing. Each drawing also provides data on normal and alternate key positions. Drawings are reduced from actual size of the insert configuration.

NOTE: Alternate keying or insert polarization is intended to resist improper intermating of plugs and receptacles of like shell sizes and like insert arrangements.

Contact Insert Ordering

Plug and receptacle contact inserts are selected according to requirements for Service Voltage Rating, Number of Contacts, Wire Size and Ampere Rating.

Mod I and II inserts may be purchased separately for assembly into the basic barrel. The Catalog Number for each is shown on the chart accompanying each drawing. Pin or socket inserts are interchangeable in male and female barrels.

Mod III inserts, as a unit, cannot be purchased separately because contact inserts are factory assembled to, and sealed in, the basic barrel. The Dash Number given with each Mod Ill configuration must be shown as a suffix to the basic barrel Catalog Number to identify the insert desired.

Arrangements are available with high amperage RADSOK® contacts specifically designed for Star-Line inserts. These are designated with an ‘R’ in the part number. For example: ZP-C28-R42PR would designate an insert with size 4/0 RADSOK pin contacts. ZP-C28-R42SR would designate an insert with size 4/0 socket contacts.

ELECTRICAL Ratings

Service Voltage Ratings

The voltage to which contact inserts are limited is a function of the dielectric separation between adjacent contacts and between contacts and shell.

The voltage rating is designated by a service voltage rating letter which is shown in the service voltage rating table with each contact configuration listing.

Service Voltage	MIlitary Ratings MIL-5015 Specifications Non-Circuit Breaking		N.E.C. Ratings		Over Surface Distance Inches Nominal	Thru-Air Spacing Inches Nominal
			Non-Circuit	Circuit Breaking		
	D.C. Volts RMS	A.C. Volts RMS	D.C. RMS	A.C. RMS		
Instrument	250	200	–	–	1/16	–
A	700	500	250	240	1/8	1/16
D	1250	900	600	600	3/16	1/8
E	1750	1250	600	600	1/4	3/16
B	2450	1750	600	600	5/16	1/4
C	4200	3000	600	600	1	5/16

Three Classifications of Ampere Ratings

MS Ampere Ratings: (MIL-C-39029)

Based on the combination of the following:

The amount of current which an individual pin and socket contact may carry is a function of contact material and design efficiency of the pin and socket system as well as the ability of the primary conductor insulation to resist temperature rises due to inherent copper losses and bundling factors.

Total current carrying capacity of the connector is a function of the insert temperature which is rated at 225° F for continuous operation. The total operating temperature is the summation of the ambient temperature plus the temperature rise resulting from the thermal losses of each contact.

MIL-W-5088 specifications may be used as a general reference on the subject inasmuch as pertinent cable derating data is included.

N.E.C. Non-Circuit-Breaking or Disconnect Ampere Ratings

The non-interrupting current ratings, shown in the table, are based on the temperature of the contacts being within the range specified by Underwriter's Laboratories, Inc. when wire sizes are selected in accordance with the National Electrical Code.

When multiple conductors are used, the load factor and temperature rise based on ambient and total insert temperature must be taken into consideration..

Contact Size AWG/ MCM	Non-Circuit Breaking Ampere Rating		† MV Drop	
	MS	N.E.C. ***	Solder Contacts	Crimp Contacts
#18	–	9	22	30
#16	13	16	21	29
#12	23	30	20	27
#10	33	40	16	26
# 8	46	50	12	23
# 4	80	90	10	22
#1/0	150	155	10	22
#4/0	225	225	8	22
350 MCM	–	325	8	–
500 MCM	–	750	–	30
535 MCM	–	839	–	–
646 MCM	–	937	–	–
777 MCM	–	1048	–	–

NOTE: The N.E.C. circuit breaking and non-circuit breaking ratings are based on test results of contacts and connectors. Consult the N.E.C. when selecting wire/cable for specific applications. Under certain conditions, a wire size may be rated higher or lower than the table indicates for a given contact size.

† Measurements made at extreme ends of mated contacts with probe touching contact and wire (MIL-5015 specifications).

** Based on temperature rise (National Electrical Code Requirement).

*** Based on Arcing Control (National Electrical Code Requirement).

Spare/Replacement Contacts for MOD II and MOD III Inserts

Contacts are machined copper alloy ranging in size (AWG) from #18 to 500 MCM.
Standard line contacts are silver plated but can also be furnished with gold over silver, gold over nickel, and other combinations of plating systems available upon request.
Pin contacts are of blended geometry to provide extra strength and protection against damage. Socket contacts are the closed entry type.
Contacts for MOD I inserts are not listed because these inserts are factory assembled and damage may be done to the resilient center insulation if contacts are inserted or removed by inexperienced personnel in the field.

MOD II

Size Awg/MCM	"W" Length	"C" Length	"W" Ground	Polarizing Standard	Polarizing "C"
18 Pin 18 Socket	ZP-4018-36L ZP-4118-36L				
16 Pin 16 Socket	ZP-4016-36L ZP-4116-36L		ZP-4016-37L		
12 Pin 12 Socket	ZP-4012-36L ZP-4112-36L		ZP-4012-37L3		
10 Pin 10 Socket	ZP-4010-36L ZP-4110-36L		ZP-4010-37L2		
8 Pin 8 Socket	ZP-4008-66L ZP-4108-66L				
4 Pin 4 Socket	ZP-4004-66L ZP-4104-66L			ZP-4804-66L ZP-4904-66L	
1/0 Pin 1/0 Socket	ZP-4100-66L	ZP-4000-66LB		ZP-4900-66LK	ZP-4800-66LKB
4/0 Pin 4/0 Socket	ZP-4141-76L	ZP-4041-76LB			
500 MCM Pin 500 MCM Socket		P-206053-CP P-206053-CS			
535 MCM Pin 535 MCM Socket		RIG-C24-535PN RIG-C24-535SN			
646-777 MCM Pin 646-777 MCM Socket		RIG-C24-386PN RIG-C24-386SN			

MOD III

Size Awg/MCM	"W" Length	"C" Length	"W" Ground	Polarizing Standard	Polarizing "C"
18 Pin 18 Socket	ZP-4018-50L ZP-4118-50L				
16 Pin 16 Socket	ZP-4016-50L ZP-4116-50L				
12 Pin 12 Socket	ZP-4012-50L ZP-4112-50L	ZP-4012-50LB	ZP-4012-52LK		
10 Pin 10 Socket	ZP-4010-50L ZP-4110-50L		ZP-4010-52LK		
8 Pin 8 Socket	ZP-4008-50L ZP-4108-50L	ZP-4008-50LB			
4 Pin 4 Socket	ZP-4004-50L ZP-4104-50L		ZP-4004-52LK	ZP-4804-50LK ZP-4904-50LK	
1/0 Pin 1/0 Socket	ZP-4100-50L ZP-4100-50L	ZP-4000-50LB	ZP-4800-52LKB	ZP-4800-50LK ZP-4900-50LK	ZP-4800-50LKB

"W" length represents standard insert lenght for sizes 12, 16, 20 24 and 28. "C" length represents longer insert length for sizes C20, C24 and C28. Contacts in "C" length inserts are 1/2" longer than standard. Ground contacts are 1/8" longer than standard. Ground clips are part of inserts. "C' length ground contacts are 1/8" longer than "C" length line contacts.

Note: For RADSOK contact availability consult Amphenol Industrial Operations.

Termination Data

Amphenol – Pyle Connectors Corporation's tools for contact crimping, insertion and removal are required for terminating and assembling contacts.

Contact Dimensions

Contact Size AWG (mm)	WIRE WELL DIMENSIONS					
	Solder Mod I		Crimp* Mod II		Crimp* Mod III	
	Diameter	Depth	Diameter	Depth	Diameter	Depth
#18 (0.75)	.060" (1.52)	13/64" (5.15)	.059" (1.49)	3/8" (9.52)	.058" (1.47)	3/8" (9.52)
#16 (1.5)	.079" (2.00)	13/64" (5.15)	.079" (2.00)	1/2" (12.70)	.079" (2.00)	1/2" (12.70)
#12 (4.0)	.117" (2.97)	17/64" (6.47)	.113" (2.87)	17/32" (6.74)	.113" (2.87)	17/32" (13.49)
#10 (6.0)	.142" (3.61)	25/64" (9.92)	.142" (3.60)	19/32" (15.09)	.142" (3.60)	19/32" (15.08)
#8 (10.0)	.210" (5.33)	33/64" (9.12)	.189" (4.80)	3/4" (19.05)	.188" (4.77)	3/4" (19.05)
#4 (25.0)	.333" (8.45)	37/64" (14.63)	.289" (7.34)	53/64" (21.03)	.278" (7.06)	53/64" (21.03)
1/0 (50.0)	.470" (11.94)	41/64" (16.27)	.445" (11.30)	1-1/8" (28.58)	.455" (11.56)	15/16" (23.81)
4/0 (120.00)	.656" (16.7)	57/64" (22.62)			.656" (16.7)	15/16" (23.81)
350MCM	.798" (20.27)	1-1/8" (28.58)				
(185.00)						
500 MCM			1.00" (25.40)	1-3/8" (34.93)		
(240.00)						

* Crimp contacts have inspection hole.

Crimp Data

Contact Size	Conductor Wire Size (AWG) Crimped	Crimp Retention Min. Force Lbs. (N)
#18 (0.75)	#18	38 (169.0)
	#20	19 (84.5)
	#22	15 (66.7)
#16 (1.5)	#16	50 (222.4)
	#18	38 (169.0)
	#20	19 (84.5)
#12 (4.0)	#12	110 (489.3)
	#14	70 (311.4)
	#16	50 (222.4)
#10 (6.0)	#10	180** (800.7)
	#12	110 (489.3)
	#14	70 (311.4)
#8 (10.0)	#8	225 (1000)
	to	
	#10	180 (800)
#4 (25.0)	#4	400 (1779)
	to	
	#6	300 (1334)
1/0 (50.0)	#2	550 (2447)
	to	
	1/0	700 (3114)
4/0 (120.00)	4/0	875 (3892)
	3/0	825 (3670)
	2/0	750 (3336)
500(240.00)	500 MCM	2500 (11120)
535 646 777	Recommend using Thomas & Betts TBM 15 crimp tool with appropriate sized dies.	

** Stranded wire

Torque Data for Pressure Contacts MOD I

Contact/Conductor Size/Awg (mm)	Torque Req. In./Lbs. (N•m)	Retention Force Lbs. (N)	
4/0 (120.00)	100 (11.3)	4/0	450 (2001.7)
		3/0	350 (1556.9)
		2/0	300 (1334.5)
1/0 (50.0)	50 (5.7)	1/0	250 (1112.0)
		#1	200 (889.6)
		#2	180 (800.7)
#4 (25.0)	20 (2.3)	#4	140 (622.8)
		#6	100 (444.8)
		#8	90 (400.3)
#8 (10.0)	25 (2.8)	#8	75 (333.6)
#10 (6.0)	15 (1.7)	#10	80 (355.9)
		#12	70 (311.4)
		#14	60 (266.9)

Thermocouple Contacts

Thermocouple contacts are available for use in all insert configurations. Contact can be either purchased separately or included in the insert/connector-please coordinate with the factory on this latter option. For crimp terminations-see tools shown on page 76. When soldering, please adhere to the following procedures: (1) clean wire and solder well with stainless scratch brush. (2) Use Handy and Harman Silver Solder Flux. (3) Use Handy and Harman AMS 2665 Silver Solder with flame torch. *IMPORTANT-Use* extreme care to prevent overheating the female contact, otherwise tension will be lost and result in poor contact. (4) Clean flux from all surfaces using boiling water or steam.

Table Temperature Range of Thermocouple Material

Material*	Temperature Range	
	Degrees Continuous	Short Time
Electrolytic Copper & Constantan	190-350°C	to 600°C
Chromel & Constantan	0-900°C	to 1100°C
Iron & Constantan	0-1100°C	to 1100°C
Chromel & Alumel	0-1100°C	to 1350°C

MOD I & II

Size	Gender	Cat. No.	Color Code	Thermocouple Material*
#16	Pin Socket	ZP-4016-10MF ZP-4116-10MF	Black	Iron
#16	Pin Socket	ZP-4016-10NF ZP-4116-10NF	Yellow	Constantan
#16	Pin Socket	ZP-4016-10PO ZP-4116-10PO	White	Chromel
#16	Pin Socket	ZP-4016-10RO ZP-4116-10RO	Green	Alumel
#16	Pin Socket	ZP-4016-10CF ZP-4116-10CF	Red	Cooper

MOD III

Size	Gender	Cat. No.	Color Code	Thermocouple Material*
#16	Pin Socket	ZP-4016-50MF ZP-4116-50MF	Black	Iron
#16	Pin Socket	ZP-4016-50NF ZP-4116-50NF	Yellow	Constantan
#16	Pin Socket	ZP-4016-50PO ZP-4116-50PO	White	Chromel
#16	Pin Socket	ZP-4016-50RO ZP-4116-50RO	Green	Alumel
#16	Pin Socket	ZP-4016-50CF ZP-4116-50CF	Red	Cooper
#16	Pin Socket	ZP-4016-50SO ZP-4116-50SO	None	Alloy #11

ISA Symbol	Nomenclature*	ISA Color Coding			Military Color Coding		Conductor Identification	
		(+)	(–)	Jacket	(+)	(–)	Positive (+)	Negative (–)
J	Iron/Constantan	White	Red	Black	Black	Yellow	Magnetic	Non-Magnetic
K	Chromel/Alumel	Yellow	Red	Yellow	White	Green	Non-Magnetic	Magnetic
T	Copper/Constantan	Blue	Red	Blue	Red	Yellow	Copper Color	Non-Magnetic
E	Chromel/Constantan	Purple	Red	Purple	White	Yellow	Non-Magnetic	Silver Color Non-Magnetic
B	Copper/Copper	Black	White	Black	Red	Red	Copper Color	Non-Magnetic
S	Alloy #11							

* Chromel and Alumel are registered trademarks of Hoskins Manufacturing Company.

Insert Configuration Index

For drawings and further information of insert arrangements listed see the referenced page numbers. Arrangements with RADSOK contacts are designated with an ‘R’ in front of the dash number in the part number. For availability of other arrangements, consult Amphenol Industrial Operations.

Insert Arrangement Number	MOD I	MOD II	MOD III	Radsok Contacts	Total Number of Contacts	18 (0.75)	16 (1.5)	12 (4.0)	10 (6.0)	8 (10.0)	4 (250)	1/0 (50.0)	4/0 (120.0)	350 MCM (185.0)	500MCM (240.0)	646-777 (300-400)	Page No.
RIG-C24-386		X			1											1	37
RIG-C24-R386		X		X	1											1	37
RIG-C24-535		X			1										1		37
RIG-C24-R535		X		X	1										1		37
ZP-C20-379					1										1		37
ZP-12-27	X				3			3									37
ZP-12-327		X			3			3									37
ZP-12-R327		X		X	3			3									37
ZP-12-330		X(G)			3			3									38
ZP-12-R330		X(G)		X	3			3									38
ZP-12-56	X(G)				3					3							38
ZP-16-74	X(G)				3						3						38
ZP-16-70	X				3						3						38
ZP-12-33	X				4		4										39
ZP-12-333		X			4		4										39
ZP-12-14	X				4				4								39
ZP-12-314		X			4				4								39
ZP-12-22	X(G)				4				4								39
ZP-16-28	X				4					4							39
ZP-16-628			X		4					4							39
ZP-16-22	X				4						4						40
ZP-16-322		X			4						4						40
ZP-16-38	X(G)				4						4						40
ZP-16-638			X(G)		4						4						40
ZP-C20-40	X(G)				4							4					40
ZP-C20-640			X(G)		4							4					40
ZP-24-83	X				4							4					40
ZP-C24-26	X(G)				4								4				41
ZP-C24-R26	X(G)			X	4								4				41
ZP-C24-38	X				4								4				41
ZP-12-53	X(G)				5			5									41
ZP-12-653			X(G)		5			5									41
ZP-12-24	X				5			5									41
ZP-12-324		X			5			5									41
ZP-12-R324		X		X	5			5									41
ZP-16-16	X				5					5							42
ZP-16-316		X			5					5							42
ZP-16-75	X(G)				5					5							42
ZP-20-84	X				5						5						42
ZP-20-384		X			5						5						42
ZP-20-38	X(G)				5						5						42
ZP-C24-79	X				5							5					43
ZP-C24-49	X(G)				5							5					43
ZP-C28-23	X(G)				5								5				43
ZP-C28-R23	X(G)			X	5								5				43
ZP-12-326		X			5		3			2							43
ZP-20-49	X				5			3				2					44
ZP-20-649			X		5			3				2					44
ZP-C24-48	X				5			2					3				44
ZP-20-43	X(G)				6				2		4						44

(G) depicts arrangement with grounded contact

Amphenol INDUSTRIAL

Insert Configuration Index

For drawings and further information of insert arrangements listed see the referenced page numbers. Arrangements with RADSOK contacts are designated with an 'R' in front of the dash number in the part number. For availability of other arrangements, consult Amphenol Industrial Operations.

Insert Arrangement Number	MOD I	MOD II	MOD III	Radsok Contacts	Total Number of Contacts	18 (0.75)	16 (1.5)	12 (4.0)	10 (6.0)	8 (10.0)	4 (250)	1/0 (50.0)	4/0 (120.0)	350 MCM (185.0)	500MCM (240.0)	646-777 (300-400)	Page No.
ZP-20-643			X(G)		6				2		4						44
ZP-20-46	X				6						4	2					44
ZP-20-646			X		6						4	2					44
ZP-20-48	X				6			3				3					45
ZP-20-648			X		6			3				3					45
ZP-C24-50	X(G)				6				2		1	3					45
ZP-C24-72	X				6			3					3				45
ZP-C28-327		X			6							6					45
ZP-C28-18	X				6			2						4			46
ZP-C28-R18	X			X	6			2						4			46
ZP-C28-42	X(G)				6				2				4				46
ZP-C28-R42	X(G)			X	6				2				4				46
ZP-12-648			X		7		7										46
ZP-12-310		X(G)			7			7									46
ZP-12-R310		X(G)		X	7			7									46
ZP-12-354		X			7			7									47
ZP-12-R354		X		X	7			7									47
ZP-16-378		X(G)			7			7									47
ZP-20-659			X		7					7							47
ZP-C24-353		X			8			4				4					47
ZP-C28-21	X				8			4						4			48
ZP-C28-R21	X			X	8			4						4			48
ZP-C28-43	X(G)				8			4						4			48
ZP-C28-R43	X(G)			X	8			4						4			48
ZP-16-29	X				9		8				1						48
ZP-16-346		X			9			6		3							48
ZP-12-355		X			10		10										49
ZP-12-334		X(G)			10		10										49
ZP-16-681			X		10			6	4								49
ZP-16-676			X(G)		10			6	4								49
ZP-20-55	X				10			8				2					50
ZP-C24-680			X(G)		10			6				4					50
ZP-20-375		X			12				12								50
ZP-16-349		X			14		12				2						50
ZP-24-40	X				15		10					5					51
ZP-C24-47	X				15			10				5					51
ZP-C24-81	X(G)				15			10				5					51
ZP-16-325		X			16		16										51
ZP-20-358		X			16					16							52
ZP-12-323		X			17	17											52
ZP-16-324		X			18		16		2								52
ZP-16-377		X			19			19									52
ZP-16-R377		X		X	19			19									52
ZP-16-312		X(G)			19			19									53
ZP-16-R312		X(G)		X	19			19									53
ZP-16-355		X			19		19										53
ZP-16-655			X		19		19										53
ZP-20-376		X			19			19									53
ZP-20-R376		X		X	19			19									53
ZP-20-688			X(G)		19			19									53

(G) depicts arrangement with grounded contact

Insert Configuration Index

For drawings and further information of insert arrangements listed see the referenced page numbers. Arrangements with RADSOK contacts are designated with an 'R' in front of the dash number in the part number. For availability of other arrangements, consult Amphenol Industrial Operations.

Insert Arrangement Number	MOD I	MOD II	MOD III	Radsok Contacts	Total Number of Contacts	18 (0.75)	16 (1.5)	12 (4.0)	10 (6.0)	8 (10.0)	4 (250)	1/0 (50.0)	4/0 (120.0)	350 MCM (185.0)	500MCM (240.0)	646-777 (300-400)	Page No.
ZP-20-32	X				20			20									54
ZP-20-332		X			20			20									54
ZP-20-R332		X		X	20			20									54
ZP-20-387		X(G)			20			20									54
ZP-20-R387		X(G)		X	20			20									54
ZP-20-334		X			20		16			4							54
ZP-16-344		X			21		11	10									54
ZP-20-331		X			22		20			2							55
ZP-16-37	X				26	18	4	4									55
ZP-16-335		X			27		24	3									55
ZP-16-673			X(G)		27		24	3									55
ZP-20-374		X			27			25			2						56
ZP-C28-328		X			29			23		2		4					56
ZP-16-321		X			37		37										56
ZP-20-386		X			37			37									56
ZP-20-R386		X		X	37			37									56
ZP-20-350		X(G)			37			37									57
ZP-20-R350		X(G)		X	37			37									57
ZP-24-371		X			37		37										57
ZP-C24-36	X				37			35				2					57
ZP-20-323		X			38		35		3								57
ZP-28-339		X			42			42									58
ZP-28-R339		X		X	42			42									58
ZP-16-371		X			46	45				1							58
ZP-20-354		X			47		45			2							58
ZP-C28-15	X				47			43			3	1					58
ZP-20-673			X		50		46			4							59
ZP-16-640			X		55	55											59
ZP-28-324		X			55		41	5		3	6						59
ZP-24-84	X				58			58									59
ZP-24-384		X			58			58									59
ZP-24-R384		X		X	58			58									59
ZP-24-352		X(G)			58			58									60
ZP-24-R352		X(G)		X	58			58									60
ZP-20-35	X				60		60										60
ZP-24-331		X			60		53	7									60
ZP-16-333		X			61	61											60
ZP-20-329		X			64		62		2								61
ZP-20-313		X			68		68										61
ZP-24-354		X			75		61	11		3							61
ZP-20-344		X			81	70		11									61
ZP-20-345		X			90	90											62
ZP-24-313		X			100		100										62
ZP-24-385		X			100		100										62
ZP-28-314		X			100		83	17									63
ZP-28-322		X			143		143										63

(G) depicts arrangement with grounded contact

Insert Configurations

1 Contact (Dead Front Male Contact/Line Side)

front face of pin insert shown

Style	Wire Terminal Type	Shell Size	Insert Type	Dash Number	Catalog Number	Qty.	Size AWG (mm)	Current Rating	Voltage
Mod II	Crimp	C24	Pin	386PN	RIG-C24-386PN	1	646-777 (300-400)	1135A	1000V
			Socket	386SN	RIG-C24-386SN				
Mod II	Radsok Crimp	C24	Pin	R386PN	RIG-C24-R386PN				
			Socket	R386SN	RIG-C24-R386SN				

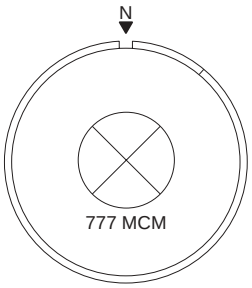

1 Contact (Dead Front Male Contact/Line Side)

Style	Wire Terminal Type	Shell Size	Insert Type	Dash Number	Catalog Number	Qty.	Size AWG (mm)	Current Rating	Voltage
Mod II	Crimp	C24	Pin	535PN	RIG-C24-535PN	1	444-535 (240.00)	900A	1000V
			Socket	535SN	RIG-C24-535SN				
Mod II	Radsok Crimp	C24	Pin	R535PN	RIG-C24-R535PN				
			Socket	R535SN	RIG-C24-R535SN				

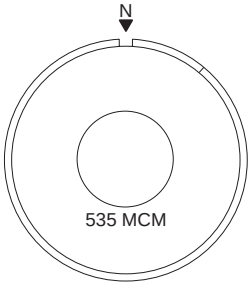

1 Contact

Style	Wire Terminal Type	Shell Size	Insert Type	Dash Number	Catalog Number	Qty.	Size AWG	Service Voltage Rating
Mod II	**Crimp**	**C20**	**Pin**	**379PN**	**ZP-C20-379PN**	**1**	**500MCM**	**D**
			Socket	**379SN**	**ZP-C20-379SN**			

NOTE: Will accept 535 standard stranding 500 MCM extra flexible cable.

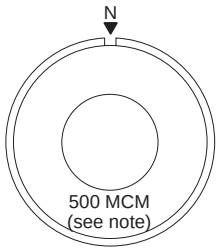

3 Contacts

Style	Wire Terminal Type	Shell Size	Insert Type	Dash Number	Catalog Number	Qty.	Size AWG	Service Voltage Rating
Mod I	Solder	12	Pin	27P	ZP-12-27P	3	12	D
			Socket	27S	ZP-12-27S			
Mod II	Crimp	12	Pin	327PN	ZP-12-327PN			
			Socket	327SN	ZP-12-327SN			
Mod II	Radsok Crimp	12	Pin	R327PN	ZP-12-R327PN			
			Socket	R327SN	ZP-12-R327SN			

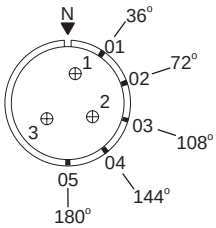

Grounding Contact Termination Symbol

Solder Well	Pressure	Crimp

Contact Symbols	○	●	⊕	○	◉	●	⊕	△	□	○	⊗
Wire Size AWG	18	16	12	10	8	4	1/0	4/0	350 MCM	500 MCM	646-777
Metric	0.75	1.5	4.0	6.0	10.0	25.0	50.0	120.00	185.00	240.00	300-400

✦ For non-circuit breaking service only.
✶ Small contacts disengage 1/8" before large contacts to provide time delay in control circuit.
★ Pre-assembled insert should be ordered mounted in barrel.

SERVICE VOLTAGE RATING
A = 240V, D = 600V

Insert Configurations

3 Contacts

front face of pin insert shown

Style	Wire Terminal Type	Shell Size	Insert Type	Dash Number	Catalog Number	Qty.	Size AWG	Service Voltage Rating
Mod II	Crimp	12	Pin Socket	330PN 330SN	ZP-12-330PN ZP-12-330SN	3	12	D
Mod II	Radsok Crimp	12	Pin Socket	R330PN R330SN	ZP-12-R330PN ZP-12-R330SN			

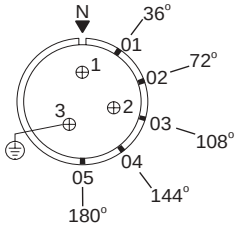

3 Contacts

Style	Wire Terminal Type	Shell Size	Insert Type	Dash Number	Catalog Number	Qty.	Size AWG	Service Voltage Rating
Mod I	Solder	12	Pin Socket	56P 56S	ZP-12-56P ZP-12-56S	3	8	◆A

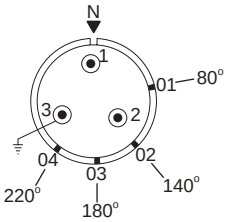

3 Contacts

Style	Wire Terminal Type	Shell Size	Insert Type	Dash Number	Catalog Number	Qty.	Size AWG	Service Voltage Rating
Mod I	Solder	16	Pin Socket	74P 74S	ZP-16-74P ZP-16-74S	3	4	D
Mod I	Pressure	16	Pin Socket	74PR 74SR	ZP-16-74-PR ZP-16-74-SR			

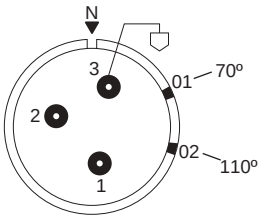

3 Contacts

Style	Wire Terminal Type	Shell Size	Insert Type	Dash Number	Catalog Number	Qty.	Size AWG	Service Voltage Rating
Mod I	Solder	16	Pin Socket	70P 70S	ZP-16-70P ZP-16-70S	3	4	D
Mod I	Pressure	16	Pin Socket	70PR 70SR	ZP-16-70PR ZP-16-70SR			

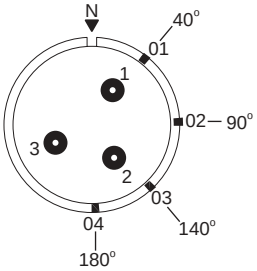

Grounding Contact Termination Symbol

Solder Well	Pressure	Crimp

Contact Symbols	○	●	⊕	○	◉	●	⊕	△	□	○	⊗
Wire Size AWG	18	16	12	10	8	4	1/0	4/0	350 MCM	500 MCM	646-777
Metric	0.75	1.5	4.0	6.0	10.0	25.0	50.0	120.00	185.00	240.00	300-400

◆ For non-circuit breaking service only.
✶ Small contacts disengage 1/8" before large contacts to provide time delay in control circuit.
★ Pre-assembled insert should be ordered mounted in barrel.

SERVICE VOLTAGE RATING
A = 240V, D = 600V

Insert Configurations

4 Contacts

front face of pin insert shown

Style	Wire Terminal Type	Shell Size	Insert Type	Dash Number	Catalog Number	Qty.	Size AWG	Service Voltage Rating
Mod I	Solder	12	Pin Socket	33P 33S	ZP-12-33P ZP-12-33S	4	16	D
Mod II	Crimp	12	Pin Socket	333PN 333SN	ZP-12-333PN ZP-12-333SN			

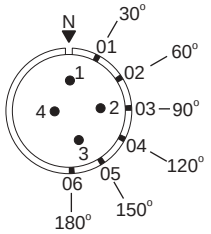

4 Contacts

Style	Wire Terminal Type	Shell Size	Insert Type	Dash Number	Catalog Number	Qty.	Size AWG	Service Voltage Rating
Mod I	Solder	12	Pin Socket	14P 14S	ZP-12-14P ZP-12-14S	4	10	D
Mod I	Pressure	12	Pin Socket	14PR 14SR	ZP-12-14PR ZP-12-14SR			
Mod II	Crimp	12	Pin Socket	314PN 314SN	ZP-12-314PN ZP-12-314SN			

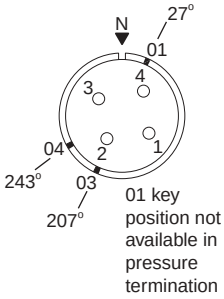

4 Contacts

Style	Wire Terminal Type	Shell Size	Insert Type	Dash Number	Catalog Number	Qty.	Size AWG	Service Voltage Rating
Mod I	Solder	12	Pin Socket	22P 22S	ZP-12-22P ZP-12-22S	4	10	D
Mod I	Pressure	12	Pin Socket	22PR 22SR	ZP-12-22PR ZP-12-22SR			

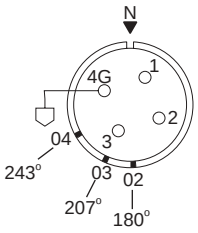

4 Contacts

Style	Wire Terminal Type	Shell Size	Insert Type	Dash Number	Catalog Number	Qty.	Size AWG	Service Voltage Rating
Mod I	Solder	16	Pin Socket	28P 28S	ZP-16-28P ZP-16-28S	4	8	D
Mod III	Crimp	16	Pin Socket	628PN 628SN	★ ★			

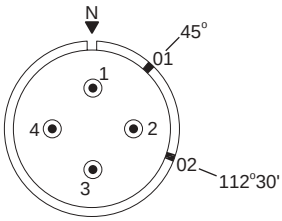

NOTE: Cannot be used with short cable adapter

Grounding Contact Termination Symbol

Solder Well	Pressure	Crimp

Contact Symbols	○	●	⊕	○	◉	●	⊕	△	□	○	⊗
Wire Size AWG	18	16	12	10	8	4	1/0	4/0	350 MCM	500 MCM	646-777
Metric	0.75	1.5	4.0	6.0	10.0	25.0	50.0	120.00	185.00	240.00	300-400

✦ For non-circuit breaking service only.
✶ Small contacts disengage 1/8" before large contacts to provide time delay in control circuit.
★ Pre-assembled insert should be ordered mounted in barrel.

SERVICE VOLTAGE RATING
A = 240V, D = 600V

Insert Configurations

4 Contacts

front face of pin insert shown

Style	Wire Terminal Type	Shell Size	Insert Type	Dash Number	Catalog Number	Qty.	Size AWG	Service Voltage Rating
Mod I	Solder	16	Pin Socket	22P 22S	ZP-16-22P ZP-16-22S	4	4	D
Mod I	Pressure	16	Pin Socket	22PR 22SR	ZP-16-22PR ZP-16-22SR			
Mod II	Crimp	16	Pin Socket	322PN 322SN	ZP-16-322PN ZP-16-322SN			

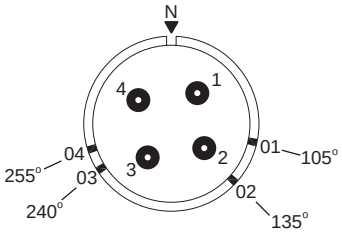

4 Contacts

Style	Wire Terminal Type	Shell Size	Insert Type	Dash Number	Catalog Number	Qty.	Size AWG	Service Voltage Rating
Mod I	Solder	16	Pin Socket	38P 38S	ZP-16-38P ZP-16-38S	4	4	D
Mod I	Pressure	16	Pin Socket	38PR 38SR	ZP-16-38PR ZP-16-38SR			
Mod III	Crimp	16	Pin Socket	638PN 638SN	★ ★			

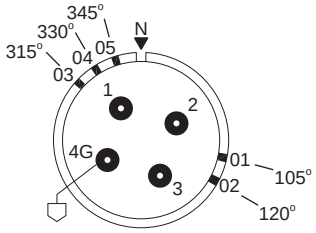

4 Contacts

Style	Wire Terminal Type	Shell Size	Insert Type	Dash Number	Catalog Number	Qty.	Size AWG	Current Rating
Mod I	Solder	C20	Pin Socket	40P 40S	ZP-C20-40P ZP-C20-40S	4	1/0	D
Mod I	Pressure	C20	Pin Socket	40PR 40SR	ZP-C20-40PR Zp-C20-40SR			
Mod III	Crimp	C20	Pin Socket	640PN 640SN	★ ★			

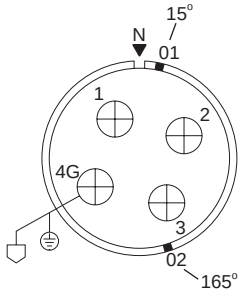

4 Contacts

Style	Wire Terminal Type	Shell Size	Insert Type	Dash Number	Catalog Number	Qty.	Size AWG	Service Voltage Rating
Mod I	Solder	24	Pin Socket	83P 83S	ZP-24-83P ZP-24-83S	4	4/0	◆D

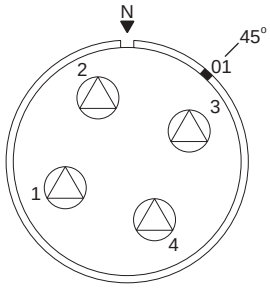

Grounding Contact Termination Symbol

Solder Well	Pressure	Crimp

Contact Symbols	○	●	⊕	○	◉	●	⊕	△	□	○	⊗
Wire Size AWG	18	16	12	10	8	4	1/0	4/0	350 MCM	500 MCM	646-777
Metric	0.75	1.5	4.0	6.0	10.0	25.0	50.0	120.00	185.00	240.00	300-400

◆ For non-circuit breaking service only.
✶ Small contacts disengage 1/8" before large contacts to provide time delay in control circuit.
★ Pre-assembled insert should be ordered mounted in barrel.

SERVICE VOLTAGE RATING
A = 240V, D = 600V

Insert Configurations

4 Contacts

front face of pin insert shown

Style	Wire Terminal Type	Shell Size	Insert Type	Dash Number	Catalog Number	Qty.	Size AWG	Service Voltage Rating
Mod I	Solder	C24	Pin Socket	26P 26S	ZP-C24-26P ZP-C24-26S	4	4/0	D
Mod I	Pressure	C24	Pin Socket	26PR 26SR	ZP-C24-26PR ZP-C24-26SR			
Mod I	Radsok Pressure	C24	Pin Socket	R26PR R26SR	ZP-C24-R26PR ZP-C24-R26SR			

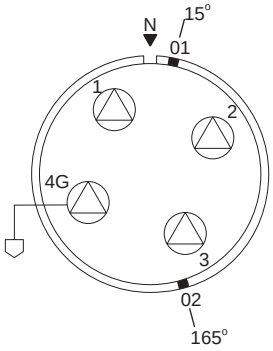

4 Contacts

Style	Wire Terminal Type	Shell Size	Insert Type	Dash Number	Catalog Number	Qty.	Size AWG	Service Voltage Rating
Mod I	Solder	C24	Pin Socket	38P 38S	ZP-C24-38P ZP-C24-38S	4	4/0	D
Mod II	Pressure	C24	Pin Socket	38PR 38SR	ZP-C24-38PR ZP-C24-38SR			

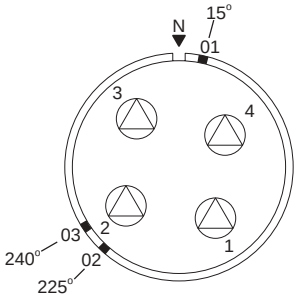

5 Contacts

Style	Wire Terminal Type	Shell Size	Insert Type	Dash Number	Catalog Number	Qty.	Size AWG	Service Voltage Rating
Mod I	Solder	12	Pin Socket	53P 53S	ZP-12-53P ZP-12-53S	5	12	D
Mod III	Crimp	12	Pin Socket	653PN 653SN	★ ★			

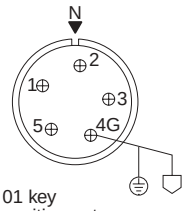

01 key position not available in presssure termination

5 Contacts

Style	Wire Terminal Type	Shell Size	Insert Type	Dash Number	Catalog Number	Qty.	Size AWG	Service Voltage Rating
ModI	Solder	12	Pin Socket	24P 24S	ZP-12-24P ZP-12-24S	5	12	D
Mod II	Crimp	12	Pin Socket	324PN 324SN	ZP-12-324PN ZP-12-324SN			
Mod II	Radsok Crimp	12	Pin Socket	R324PN R324SN	ZP-12-R324PN ZP-12-R324SN			

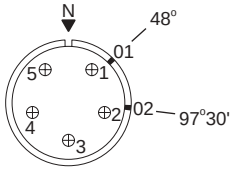

Grounding Contact Termination Symbol

Solder Well	Pressure	Crimp

Contact Symbols	○	●	⊕	○	◉	●	⊕	△	□	○	⊗
Wire Size AWG	18	16	12	10	8	4	1/0	4/0	350 MCM	500 MCM	646-777
Metric	0.75	1.5	4.0	6.0	10.0	25.0	50.0	120.00	185.00	240.00	300-400

✦ For non-circuit breaking service only.
✶ Small contacts disengage 1/8" before large contacts to provide time delay in control circuit.
★ Pre-assembled insert should be ordered mounted in barrel.

SERVICE VOLTAGE RATING
A = 240V, D = 600V

Insert Configurations

5 Contacts

front face of pin insert shown

Style	Wire Terminal Type	Shell Size	Insert Type	Dash Number	Catalog Number	Qty.	Size AWG	Service Voltage Rating
Mod I	Solder	16	Pin Socket	16P 16S	ZP-16-16P ZP-16-16S	5	8	D
Mod II	Crimp	16	Pin Socket	316PN 316SN	ZP-16-316PN ZP-16-316SN			

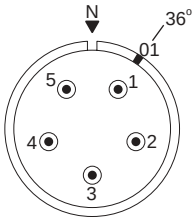

5 Contacts

Style	Wire Terminal Type	Shell Size	Insert Type	Dash Number	Catalog Number	Qty.	Size AWG	Service Voltage Rating
Mod I	Solder	16	Pin Socket	75P 75S	ZP-16-75P ZP-16-75S	5	8	D

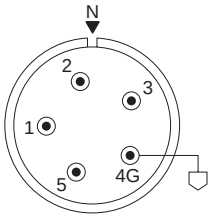

5 Contacts

Style	Wire Terminal Type	Shell Size	Insert Type	Dash Number	Catalog Number	Qty.	Size AWG	Service Voltage Rating
Mod I	Solder	20	Pin Socket	84P 84S	ZP-20-84P ZP-20-84S	5	4	D
Mod I	Pressure	20	Pin Socket	84PR 84SR	ZP-20-84PR ZP-20-84SR			
Mod II	Crimp	20	Pin Socket	384PN 384SN	ZP-20-384PN ZP-20-384SN			

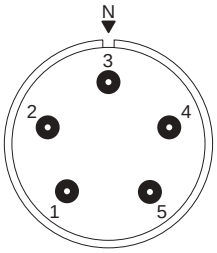

5 Contacts

Style	Wire Terminal Type	Shell Size	Insert Type	Dash Number	Catalog Number	Qty.	Size AWG	Service Voltage Rating
Mod I	Solder	20	Pin Socket	38P 38S	ZP-20-38P ZP-20-38S	5	4	D
Mod I	Pressure	20	Pin Socket	38PR 38SR	ZP-20-38PR ZP-20-38SR			

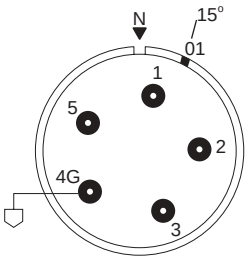

Grounding Contact Termination Symbol

Solder Well	Pressure	Crimp

Contact Symbols	○	●	⊕	○	◉	●	⊕	△	□	○	⊗
Wire Size AWG	18	16	12	10	8	4	1/0	4/0	350 MCM	500 MCM	646-777
Metric	0.75	1.5	4.0	6.0	10.0	25.0	50.0	120.00	185.00	240.00	300-400

✦ For non-circuit breaking service only.
✶ Small contacts disengage 1/8" before large contacts to provide time delay in control circuit.
★ Pre-assembled insert should be ordered mounted in barrel.

SERVICE VOLTAGE RATING
A = 240V, D = 600V

Insert Configurations

5 Contacts

front face of pin insert shown

Style	Wire Terminal Type	Shell Size	Insert Type	Dash Number	Catalog Number	Qty.	Size AWG	Service Voltage Rating
Mod I	Solder	C24	Pin	79P	ZP-C24-79P	5	1/0	E
			Socket	79S	ZP-C24-79S			
Mod I	Pressure	C24	Pin	79PR	ZP-C24-79PR			
			Socket	79SR	ZP-C24-79SR			

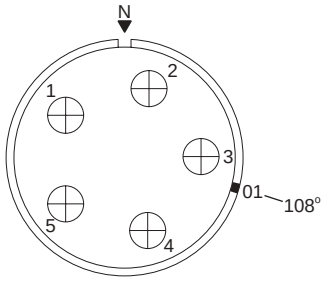

5 Contacts

Style	Wire Terminal Type	Shell Size	Insert Type	Dash Number	Catalog Number	Qty.	Size AWG	Service Voltage Rating
Mod I	Solder	C24	Pin	49P	ZP-C24-49P	5	1/0	E
			Socket	49S	ZP-C24-49S			
Mod I	Pressure	C24	Pin	49PR	ZP-C24-49PR			
			Socket	49SR	ZP-C24-49SR			

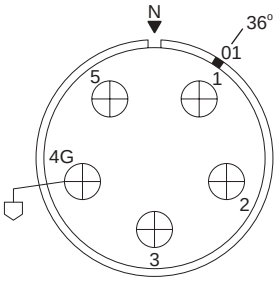

5 Contacts

Style	Wire Terminal Type	Shell Size	Insert Type	Dash Number	Catalog Number	Qty.	Size AWG	Service Voltage Rating
Mod I	Solder	C28	Pin	23P	ZP-C28-23P	5	4/0	D
			Socket	23S	ZP-C28-23S			
Mod I	Pressure	C28	Pin	23PR	ZP-C28-23PR			
			Socket	23SR	ZP-C28-23SR			
Mod I	Radsok Pressure	C28	Pin	R23PR	ZP-C28-R23PR			
			Socket	R23SR	ZP-C28-R23SR			

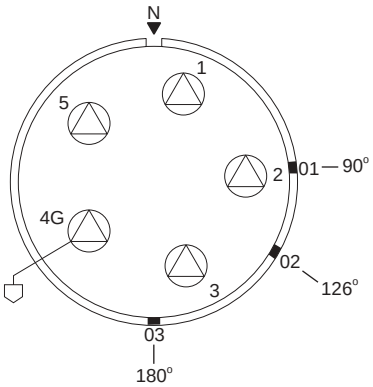

5 Contacts

Style	Wire Terminal Type	Shell Size	Insert Type	Dash Number	Catalog Number	Qty.	Size AWG	Service Voltage Rating
Mod II	Crimp	12	Pin	326PN	ZP-12-326PN	2	8	◆A
			Socket	326SN	ZP-12-326SN	3	16	◆A

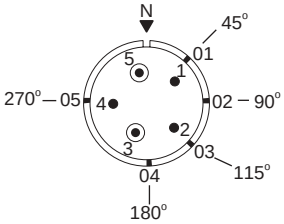

Grounding Contact Termination Symbol

Solder Well	Pressure	Crimp

Contact Symbols	○	●	⊕	○	◉	●	⊕	△	□	○	⊗
Wire Size AWG	18	16	12	10	8	4	1/0	4/0	350 MCM	500 MCM	646-777
Metric	0.75	1.5	4.0	6.0	10.0	25.0	50.0	120.00	185.00	240.00	300-400

✦ For non-circuit breaking service only.
✶ Small contacts disengage 1/8" before large contacts to provide time delay in control circuit.
★ Pre-assembled insert should be ordered mounted in barrel.

SERVICE VOLTAGE RATING
A = 240V, D = 600V

Insert Configurations

5 Contacts

front face of pin insert shown

Style	Wire Terminal Type	Shell Size	Insert Type	Dash Number	Catalog Number	Qty.	Size AWG	Service Voltage Rating
Mod I	Solder	20	Pin	49P	ZP-20-49P	2	1/0	◆E
			Socket	49S	ZP-20-49S	3	12	◆E
Mod III	Crimp	20	Pin	649PN	★			
			Socket	649SN	★			

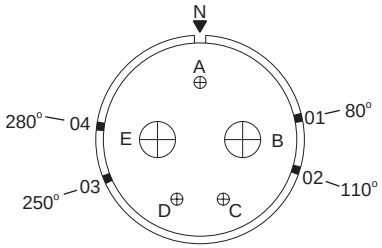

5 Contacts

Style	Wire Terminal Type	Shell Size	Insert Type	Dash Number	Catalog Number	Qty.	Size AWG	Service Voltage Rating
Mod I	Solder	C24	Pin	48P	ZP-C24-48P	3	4/0	✶D
			Socket	48S	ZP-C24-48S	2	12	✶A

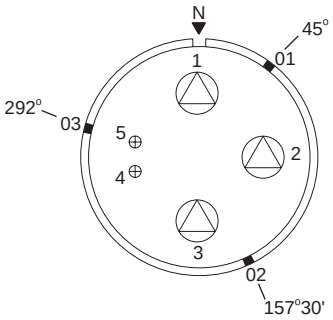

6 Contacts

Style	Wire Terminal Type	Shell Size	Insert Type	Dash Number	Catalog Number	Qty.	Size AWG	Service Voltage Rating
Mod I	Pressure	20	Pin	43PR	ZP-20-43PR	4	4	✶D
			Socket	43SR	ZP-20-43SR	2	10	✶D
Mod III	Crimp	20	Pin	643PN	★			
			Socket	643SN	★			

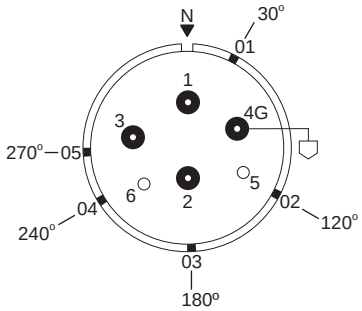

6 Contacts

Style	Wire Terminal Type	Shell Size	Insert Type	Dash Number	Catalog Number	Qty.	Size AWG	Service Voltage Rating
Mod I	Solder	20	Pin	46PR	ZP-20-46P	2	1/0	✥A
			Socket	46SR	ZP-20-46S	4	4	✥A
Mod III	Crimp	20	Pin	646PN	★			
			Socket	646SN	★			

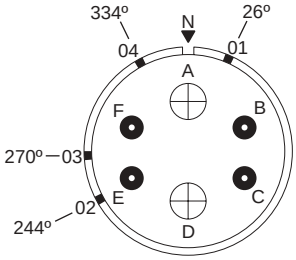

Grounding Contact Termination Symbol

Solder Well	Pressure	Crimp

Contact Symbols	○	●	⊕	○	◉	●	⊕	△	□	○	⊗
Wire Size AWG	18	16	12	10	8	4	1/0	4/0	350 MCM	500 MCM	646-777
Metric	0.75	1.5	4.0	6.0	10.0	25.0	50.0	120.00	185.00	240.00	300-400

◆ For non-circuit breaking service only.
✶ Small contacts disengage 1/8" before large contacts to provide time delay in control circuit.
★ Pre-assembled insert should be ordered mounted in barrel.

SERVICE VOLTAGE RATING
A = 240V, D = 600V

Amphenol INDUSTRIAL

Insert Configurations

6 Contacts

front face of pin insert shown

Style	Wire Terminal Type	Shell Size	Insert Type	Dash Number	Catalog Number	Qty.	Size AWG	Service Voltage Rating
Mod I	Solder	20	Pin	48P	ZP-20-48P	3	1/0	✦D
			Socket	48S	ZP-20-48S	3	12	✦D
Mod III	Crimp	20	Pin	648PN	★			
			Socket	648SN	★			

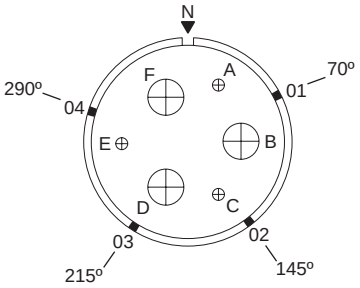

6 Contacts

Style	Wire Terminal Type	Shell Size	Insert Type	Dash Number	Catalog Number	Qty.	Size AWG	Service Voltage Rating
Mod I	Pressure	C24	Pin	50PR	ZP-C24-50PR	3	1/0	✶D
			Socket	50SR	ZP-C24-50SR	2	10 relay	✶D
						1	4	✶D

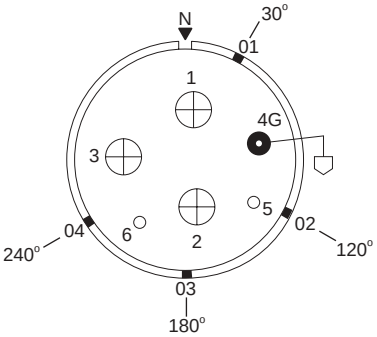

6 Contacts

Style	Wire Terminal Type	Shell Size	Insert Type	Dash Number	Catalog Number	Qty.	Size AWG	Service Voltage Rating
Mod I	Solder	C24	Pin	72P	ZP-C24-72P	3	4/0	D
			Socket	72S	ZP-C24-72S	3	12	D

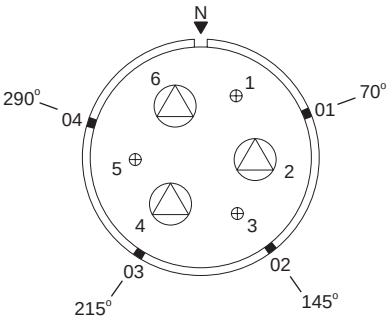

6 Contacts

Style	Wire Terminal Type	Shell Size	Insert Type	Dash Number	Catalog Number	Qty.	Size AWG	Service Voltage Rating
Mod II	Crimp	C28	Pin	327PN	ZP-C28-327PN	6	1/0	D
			Socket	327SN	ZP-C28-327SN			

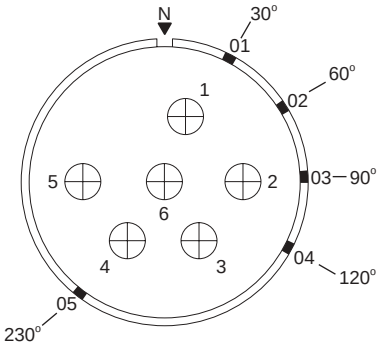

Grounding Contact Termination Symbol

Solder Well	Pressure	Crimp

Contact Symbols	○	●	⊕	○	◉	●	⊕	△	□	○	⊗
Wire Size AWG	18	16	12	10	8	4	1/0	4/0	350 MCM	500 MCM	646-777
Metric	0.75	1.5	4.0	6.0	10.0	25.0	50.0	120.00	185.00	240.00	300-400

✦ For non-circuit breaking service only.
✶ Small contacts disengage 1/8" before large contacts to provide time delay in control circuit.
★ Pre-assembled insert should be ordered mounted in barrel.

SERVICE VOLTAGE RATING
A = 240V, D = 600V

Insert Configurations

front face of pin insert shown

6 Contacts

Style	Wire Terminal Type	Shell Size	Insert Type	Dash Number	Catalog Number	Qty.	Size AWG	Service Voltage Rating
Mod I	Solder	C28	Pin	18P	ZP-C28-18P	4	350 MCM	✶D
			Socket	18S	ZP-C28-18S	2	12 Relay	✶E
Mod I	Radsok Solder	C28	Pin	R18P	ZP-C28-R18P			
			Socket	R18S	ZP-C28-R18S			

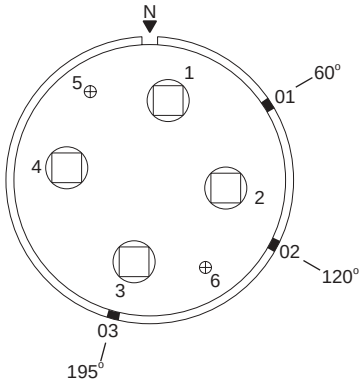

6 Contacts

Style	Wire Terminal Type	Shell Size	Insert Type	Dash Number	Catalog Number	Qty.	Size AWG	Service Voltage Rating
Mod I	Solder	C28	Pin	42P	ZP-C28-42P	4	4/0	✶D
			Socket	42S	ZP-C28-42S	2	10 Relay	✶D
Mod I	Pressure	C28	Pin	42PR	ZP-C28-42PR			
			Socket	42SR	ZP-C28-42SR			
Mod I	RADSOK Pressure	C28	Pin	R42PR	ZP-C28-R42PR			
			Socket	R42SR	ZP-C28-R42SR			

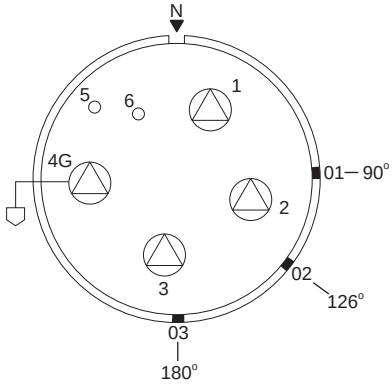

7 Contacts

Style	Wire Terminal Type	Shell Size	Insert Type	Dash Number	Catalog Number	Qty.	Size AWG	Service Voltage Rating
Mod III	Crimp	12	Pin	648PN	★	7	16	A
			Socket	648SN	★			

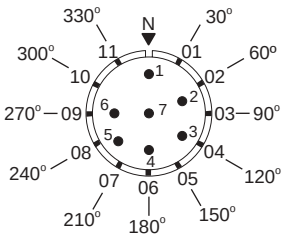

7 Contacts

Style	Wire Terminal Type	Shell Size	Insert Type	Dash Number	Catalog Number	Qty.	Size AWG	Service Voltage Rating
Mod II	Crimp	12	Pin	310PN	ZP-12-310PN	7	12	✦A
			Socket	310SN	ZP-12-310SN			
Mod II	Radsok Crimp	12	Pin	R310PN	ZP-12-R310PN			
			Socket	R310SN	ZP-12-R310SN			

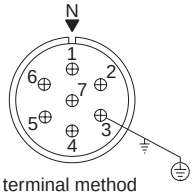

Ground terminal method same as corresponding line contacts

Grounding Contact Termination Symbol

Solder Well	Pressure	Crimp

Contact Symbols	○	●	⊕	○	◉	●	⊕	△	□	○	⊗
Wire Size AWG	18	16	12	10	8	4	1/0	4/0	350 MCM	500 MCM	646-777
Metric	0.75	1.5	4.0	6.0	10.0	25.0	50.0	120.00	185.00	240.00	300-400

✦ For non-circuit breaking service only.
✶ Small contacts disengage 1/8" before large contacts to provide time delay in control circuit.
★ Pre-assembled insert should be ordered mounted in barrel.

SERVICE VOLTAGE RATING
A = 240V, D = 600V

Amphenol INDUSTRIAL

Insert Configurations

front face of pin insert shown

7 Contacts

Style	Wire Terminal Type	Shell Size	Insert Type	Dash Number	Catalog Number	Qty.	Size AWG	Service Voltage Rating
Mod II	Crimp	12	Pin	354PN	ZP-12-354PN	7	12	✦A
			Socket	354SN	ZP-12-354SN			
Mod II	RADSOK Crimp	12	Pin	R354PN	ZP-12-R354PN			
			Socket	R354SN	ZP-12-R354SN			

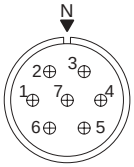

7 Contacts

Style	Wire Terminal Type	Shell Size	Insert Type	Dash Number	Catalog Number	Qty.	Size AWG	Service Voltage Rating
Mod II	Crimp	16	Pin	378PN	ZP-16-378PN	7	12	D
			Socket	378SN	ZP-16-378SN			

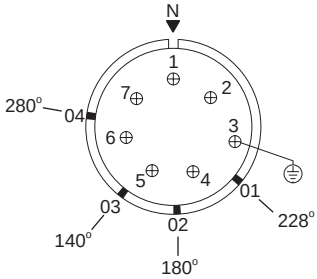

7 Contacts

Style	Wire Terminal Type	Shell Size	Insert Type	Dash Number	Catalog Number	Qty.	Size AWG	Service Voltage Rating
Mod III	Crimp	20	Pin	659PN	★	7	8	E
			Socket	659SN	★			

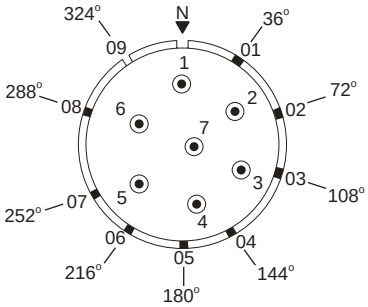

8 Contacts

Style	Wire Terminal Type	Shell Size	Insert Type	Dash Number	Catalog Number	Qty.	Size AWG	Service Voltage Rating
Mod II	Crimp	C24	Pin	353PN	ZP-C24-353PN	4	1/0	✦B
			Socket	353SN	ZP-C24-353SN	4	12	✦A

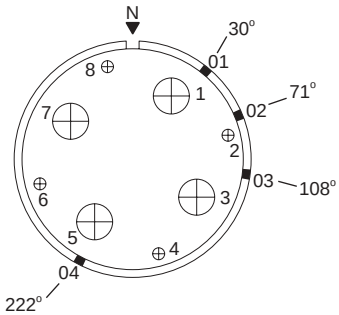

Grounding Contact Termination Symbol

Solder Well	Pressure	Crimp

Contact Symbols	○	●	⊕	○	◉	●	⊕	△	□	○	⊗
Wire Size AWG	18	16	12	10	8	4	1/0	4/0	350 MCM	500 MCM	646-777
Metric	0.75	1.5	4.0	6.0	10.0	25.0	50.0	120.00	185.00	240.00	300-400

✦ For non-circuit breaking service only.
✶ Small contacts disengage 1/8" before large contacts to provide time delay in control circuit.
★ Pre-assembled insert should be ordered mounted in barrel.

SERVICE VOLTAGE RATING
A = 240V, D = 600V

Insert Configurations

front face of pin insert shown

8 Contacts

Style	Wire Terminal Type	Shell Size	Insert Type	Dash Number	Catalog Number	Qty.	Size AWG	Service Voltage Rating
Mod I	Solder	C28	Pin	21P	ZP-C28-21P	4	350 MCM	✶D
			Socket	21S	ZP-C28-21S	4	12 Relay	✶E
Mod I	Radsok Solder	C28	Pin	R21P	ZP-C28-R21P			
			Socket	R21S	ZP-C28-R21S			

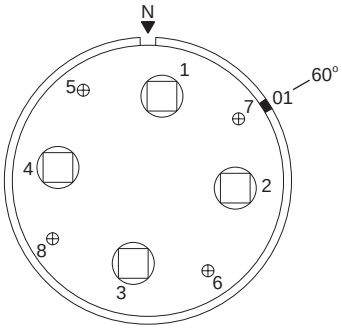

8 Contacts

Style	Wire Terminal Type	Shell Size	Insert Type	Dash Number	Catalog Number	Qty.	Size AWG	Service Voltage Rating
Mod I	Solder	C28	Pin	43P	ZP-C28-43P	4	350 MCM	✶D
			Socket	43S	ZP-C28-43S	4	12 Relay	✶E
Mod I	Radsok Solder	C28	Pin	R43P	ZP-C28-R43P			
			Socket	R43S	ZP-C28-R43S			

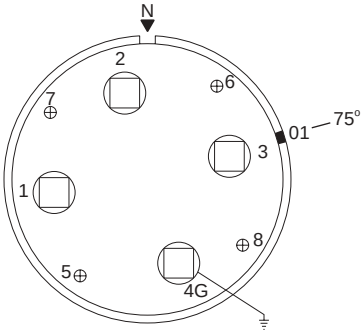

9 Contacts

Style	Wire Terminal Type	Shell Size	Insert Type	Dash Number	Catalog Number	Qty.	Size AWG	Service Voltage Rating
Mod I	Solder	16	Pin	29P	ZP-16-29P	1	4	✦D
			Socket	29S	ZP-16-29S	8	16	✦D

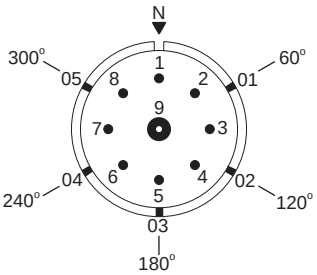

9 Contacts

Style	Wire Terminal Type	Shell Size	Insert Type	Dash Number	Catalog Number	Qty.	Size AWG	Service Voltage Rating
Mod II	Crimp	16	Pin	346PN	ZP-16-346PN	6	12	A
			Socket	346SN	ZP-16-346SN	3	8	A

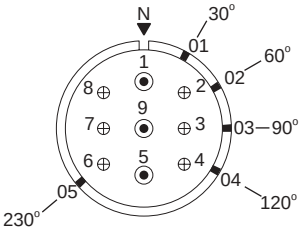

Grounding Contact Termination Symbol

Solder Well	Pressure	Crimp

Contact Symbols	○	●	⊕	○	◉	●	⊕	△	□	○	⊗
Wire Size AWG	18	16	12	10	8	4	1/0	4/0	350 MCM	500 MCM	646-777
Metric	0.75	1.5	4.0	6.0	10.0	25.0	50.0	120.00	185.00	240.00	300-400

✦ For non-circuit breaking service only.
✶ Small contacts disengage 1/8" before large contacts to provide time delay in control circuit.
★ Pre-assembled insert should be ordered mounted in barrel.

SERVICE VOLTAGE RATING
A = 240V, D = 600V

Insert Configurations

front face of pin insert shown

10 Contacts

Style	Wire Terminal Type	Shell Size	Insert Type	Dash Number	Catalog Number	Qty.	Size AWG	Service Voltage Rating
Mod II	Crimp	12	Pin	355PN	ZP-12-355PN	10	16	✦A
			Socket	355SN	ZP-12-355SN			

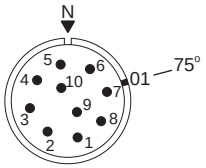

10 Contacts

Style	Wire Terminal Type	Shell Size	Insert Type	Dash Number	Catalog Number	Qty.	Size AWG	Service Voltage Rating
Mod II	Crimp	12	Pin	334PN	ZP-12-334PN	10	16	A
			Socket	334SN	ZP-12-334SN			

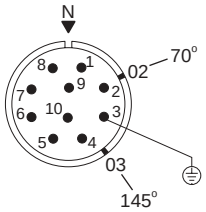

10 Contacts

Style	Wire Terminal Type	Shell Size	Insert Type	Dash Number	Catalog Number	Qty.	Size AWG	Service Voltage Rating
Mod III	Crimp	16	Pin	681PN	★	4	10	D
			Socket	681SN	★	6	12	D

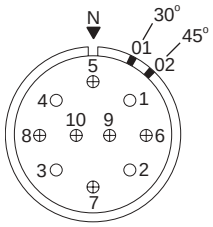

10 Contacts

Style	Wire Terminal Type	Shell Size	Insert Type	Dash Number	Catalog Number	Qty.	Size AWG	Service Voltage Rating
Mod III	Crimp	16	Pin	676PN	★	4	10	D
			Socket	676SN	★	6	12	D

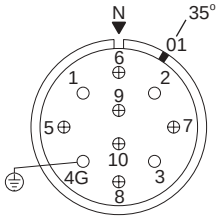

Grounding Contact Termination Symbol

Solder Well	Pressure	Crimp

Contact Symbols	○	●	⊕	○	◉	●	⊕	△	□	○	⊗
Wire Size AWG	18	16	12	10	8	4	1/0	4/0	350 MCM	500 MCM	646-777
Metric	0.75	1.5	4.0	6.0	10.0	25.0	50.0	120.00	185.00	240.00	300-400

✦ For non-circuit breaking service only.
✶ Small contacts disengage 1/8" before large contacts to provide time delay in control circuit.
★ Pre-assembled insert should be ordered mounted in barrel.

SERVICE VOLTAGE RATING
A = 240V, D = 600V

Insert Configurations

front face of pin insert shown

10 Contacts

Style	Wire Terminal Type	Shell Size	Insert Type	Dash Number	Catalog Number	Qty.	Size AWG	Service Voltage Rating
Mod I	Solder	20	Pin	55P	ZP-20-55P	2	1/0	D
			Socket	55S	ZP-20-55S	8	12	D

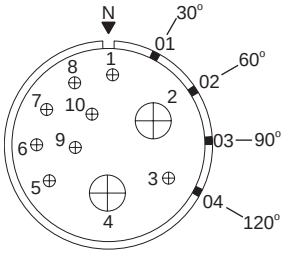

10 Contacts

Style	Wire Terminal Type	Shell Size	Insert Type	Dash Number	Catalog Number	Qty.	Size AWG	Service Voltage Rating
Mod III	Crimp	C24	Pin	680PN	★	4	1/0	D
			Socket	680SN	★	6	12	D

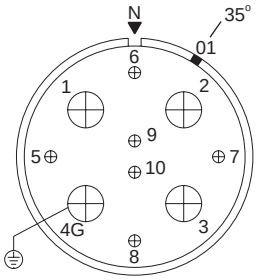

12 Contacts

Style	Wire Terminal Type	Shell Size	Insert Type	Dash Number	Catalog Number	Qty.	Size AWG	Service Voltage Rating
Mod II	Crimp	20	Pin	375PN	ZP-20-375PN	12	10	D
			Socket	375SN	ZP-20-375SN			

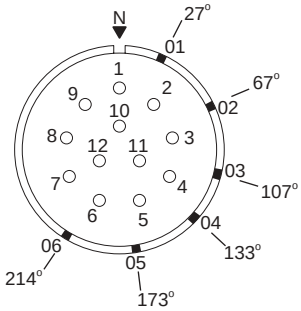

14 Contacts

Style	Wire Terminal Type	Shell Size	Insert Type	Dash Number	Catalog Number	Qty.	Size AWG	Service Voltage Rating
Mod II	Crimp	16	Pin	349PN	ZP-16-349PN	2	4	✦D
			Socket	349SN	ZP-16-349SN	12	16	✦A

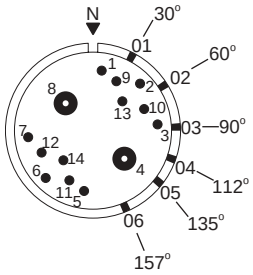

Grounding Contact Termination Symbol

Solder Well	Pressure	Crimp

Contact Symbols	○	●	⊕	○	◉	●	⊕	△	□	○	⊗
Wire Size AWG	18	16	12	10	8	4	1/0	4/0	350 MCM	500 MCM	646-777
Metric	0.75	1.5	4.0	6.0	10.0	25.0	50.0	120.00	185.00	240.00	300-400

✦ For non-circuit breaking service only.
✶ Small contacts disengage 1/8" before large contacts to provide time delay in control circuit.
★ Pre-assembled insert should be ordered mounted in barrel.

SERVICE VOLTAGE RATING
A = 240V, D = 600V

Amphenol INDUSTRIAL

Insert Configurations

front face of pin insert shown

15 Contacts

Style	Wire Terminal Type	Shell Size	Insert Type	Dash Number	Catalog Number	Qty.	Size AWG	Service Voltage Rating
Mod I	Solder	24	Pin	40P	ZP-24-40P	5	1/0	✦D
			Socket	40S	ZP-24-40S	10	16	✦D

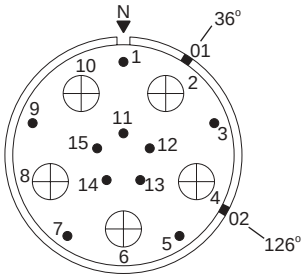

15 Contacts

Style	Wire Terminal Type	Shell Size	Insert Type	Dash Number	Catalog Number	Qty.	Size AWG	Service Voltage Rating
Mod I	Solder	C24	Pin	47P	ZP-C24-47P	5	1/0	D
			Socket	47S	ZP-C24-47S	10	12	A

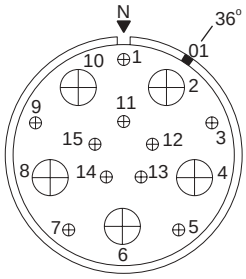

15 Contacts

Style	Wire Terminal Type	Shell Size	Insert Type	Dash Number	Catalog Number	Qty.	Size AWG	Service Voltage Rating
Mod I	Solder	C24	Pin	81P	ZP-C24-81P	5	1/0	D
			Socket	81S	ZP-C24-81S	10	12	A

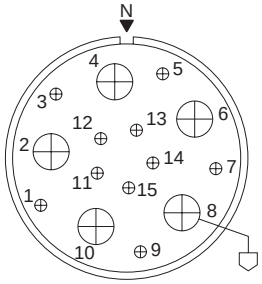

16 Contacts

Style	Wire Terminal Type	Shell Size	Insert Type	Dash Number	Catalog Number	Qty.	Size AWG	Service Voltage Rating
Mod II	Crimp	16	Pin	325PN	ZP-16-325PN	16	16	D
			Socket	325SN	ZP-16-325SN			

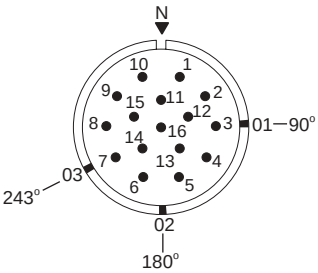

Grounding Contact Termination Symbol

Solder Well	Pressure	Crimp

Contact Symbols	○	●	⊕	○	◉	●	⊕	△	□	○	⊗
Wire Size AWG	18	16	12	10	8	4	1/0	4/0	350 MCM	500 MCM	646-777
Metric	0.75	1.5	4.0	6.0	10.0	25.0	50.0	120.00	185.00	240.00	300-400

✦ For non-circuit breaking service only.
✶ Small contacts disengage 1/8" before large contacts to provide time delay in control circuit.
★ Pre-assembled insert should be ordered mounted in barrel.

SERVICE VOLTAGE RATING
A = 240V, D = 600V

Insert Configurations

front face of pin insert shown

16 Contacts

Style	Wire Terminal Type	Shell Size	Insert Type	Dash Number	Catalog Number	Qty.	Size AWG	Service Voltage Rating
Mod II	Crimp	20	Pin	358PN	ZP-20-358PN	16	8	✦A
			Socket	358SN	ZP-20-358SN			

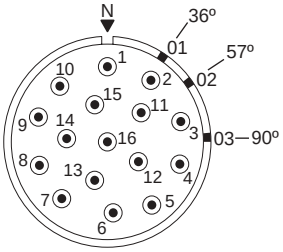

17 Contacts

Style	Wire Terminal Type	Shell Size	Insert Type	Dash Number	Catalog Number	Qty.	Size AWG	Service Voltage Rating
Mod II	Crimp	12	Pin	323PN	ZP-12-323PN	17	18	✦A
			Socket	323SN	ZP-12-323PN			

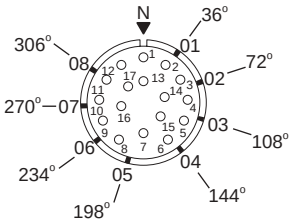

18 Contacts

Style	Wire Terminal Type	Shell Size	Insert Type	Dash Number	Catalog Number	Qty.	Size AWG	Service Voltage Rating
Mod II	Crimp	16	Pin	324PN	ZP-16-324PN	2	10	D
			Socket	324SN	ZP-16-324SN	16	16	D

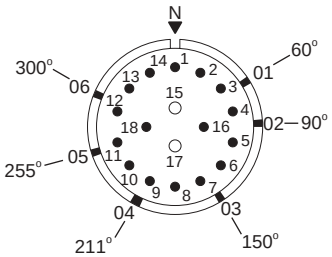

19 Contacts

Style	Wire Terminal Type	Shell Size	Insert Type	Dash Number	Catalog Number	Qty.	Size AWG	Service Voltage Rating
Mod II	Crimp	16	Pin	377PN	ZP-16-377PN	19	12	✦A
			Socket	377SN	ZP-16-377SN			
Mod II	Radsok Crimp	16	Pin	R377PN	ZP-16-R377PN			
			Socket	R377SN	ZP-16-R377SN			

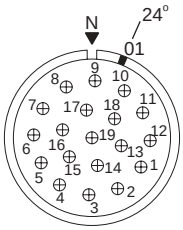

Grounding Contact Termination Symbol

Solder Well	Pressure	Crimp

Contact Symbols	○	●	⊕	○	◉	●	⊕	△	□	○	⊗
Wire Size AWG	18	16	12	10	8	4	1/0	4/0	350 MCM	500 MCM	646-777
Metric	0.75	1.5	4.0	6.0	10.0	25.0	50.0	120.00	185.00	240.00	300-400

✦ For non-circuit breaking service only.
✶ Small contacts disengage 1/8" before large contacts to provide time delay in control circuit.
★ Pre-assembled insert should be ordered mounted in barrel.

SERVICE VOLTAGE RATING
A = 240V, D = 600V

Amphenol INDUSTRIAL

Insert Configurations

front face of pin insert shown

19 Contacts

Style	Wire Terminal Type	Shell Size	Insert Type	Dash Number	Catalog Number	Qty.	Size AWG	Service Voltage Rating
Mod II	Crimp	16	Pin	312PN	ZP-16-312PN	19	12	✦A
			Socket	312SN	ZP-16-312SN			
Mod II	Radsok Crimp	16	Pin	R312PN	ZP-16-R312PN			
			Socket	R312SN	ZP-16-R312SN			

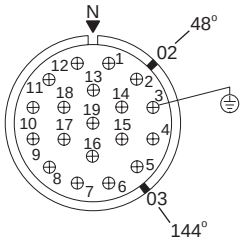

19 Contacts

Style	Wire Terminal Type	Shell Size	Insert Type	Dash Number	Catalog Number	Qty.	Size AWG	Service Voltage Rating
Mod II	Crimp	16	Pin	355PN	ZP-16-355PN	19	16	A
			Socket	355SN	ZP-16-355SN			
Mod III	Crimp	16	Pin	655PN	★			
			Socket	655SN	★			

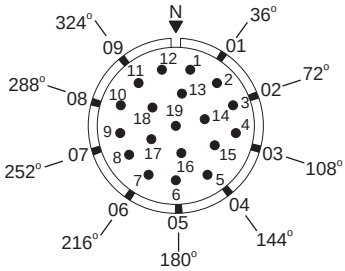

19 Contacts

Style	Wire Terminal Type	Shell Size	Insert Type	Dash Number	Catalog Number	Qty.	Size AWG	Service Voltage Rating
Mod II	Crimp	20	Pin	376PN	ZP-20-376PN	19	12	D
			Socket	376SN	ZP-20-376SN			
Mod II	Radsok Crimp	20	Pin	R376PN	ZP-20-R376PN			
			Socket	R376SN	ZP-20-R376SN			

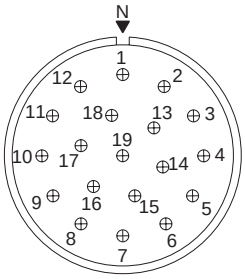

19 Contacts

Style	Wire Terminal Type	Shell Size	Insert Type	Dash Number	Catalog Number	Qty.	Size AWG	Service Voltage Rating
Mod III	Crimp	20	Pin	688PN	★	19	12	D
			Socket	688SN	★			

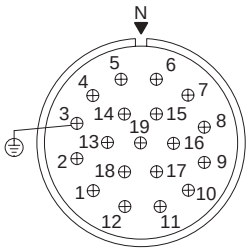

Grounding Contact Termination Symbol

Solder Well	Pressure	Crimp

Contact Symbols	○	•	⊕	○	◉	●	⊕	△	□	○	⊗
Wire Size AWG	18	16	12	10	8	4	1/0	4/0	350 MCM	500 MCM	646-777
Metric	0.75	1.5	4.0	6.0	10.0	25.0	50.0	120.00	185.00	240.00	300-400

✦ For non-circuit breaking service only.
✶ Small contacts disengage 1/8" before large contacts to provide time delay in control circuit.
★ Pre-assembled insert should be ordered mounted in barrel.

SERVICE VOLTAGE RATING
A = 240V, D = 600V

Insert Configurations

front face of pin insert shown

20 Contacts

Style	Wire Terminal Type	Shell Size	Insert Type	Dash Number	Catalog Number	Qty.	Size AWG	Service Voltage Rating
Mod I	Solder	20	Pin	32P	ZP-20-32P	20	12	✦B Center
			Socket	32S	ZP-20-32S			✦A Outer
Mod II	Crimp	20	Pin	332PN	ZP-20-332PN			
			Socket	332SN	ZP-20-332SN			
Mod II	Radsok Crimp	20	Pin	R332PN	ZP-20-R332PN			
			Socket	R332SN	ZP-20-R332SN			

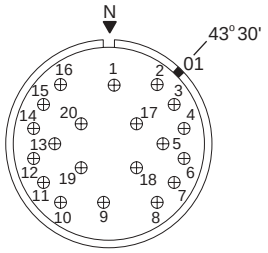

20 Contacts

Style	Wire Terminal Type	Shell Size	Insert Type	Dash Number	Catalog Number	Qty.	Size AWG	Service Voltage Rating
Mod II	Crimp	20	Pin	387PN	ZP-20-387PN	20	12	✦B Center
			Socket	387SN	ZP-20-387SN			✦A Outer
Mod II	Radsok Crimp	20	Pin	R387PN	ZP-20-R387PN			
			Socket	R387SN	ZP-20-R387SN			

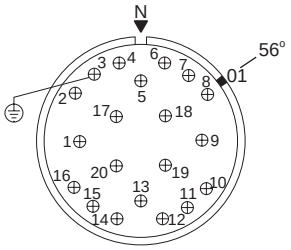

20 Contacts

Style	Wire Terminal Type	Shell Size	Insert Type	Dash Number	Catalog Number	Qty.	Size AWG	Service Voltage Rating
Mod II	Crimp	20	Pin	334PN	ZP-20-334PN	4	8	✦D
			Socket	334SN	ZP-20-334SN	16	16	✦D

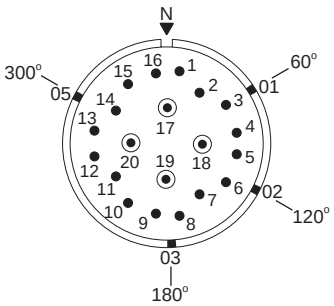

21 Contacts

Style	Wire Terminal Type	Shell Size	Insert Type	Dash Number	Catalog Number	Qty.	Size AWG	Service Voltage Rating
Mod II	Crimp	16	Pin	344PN	ZP-16-344PN	10	12	✦A
			Socket	344SN	ZP-16-344SN	11	16	✦A

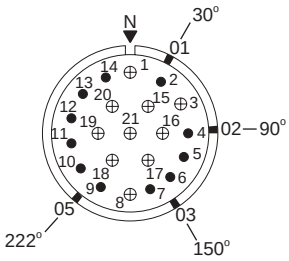

Grounding Contact Termination Symbol

Solder Well	Pressure	Crimp

Contact Symbols	○	●	⊕	○	◉	●	⊕	△	□	○	⊗
Wire Size AWG	18	16	12	10	8	4	1/0	4/0	350 MCM	500 MCM	646-777
Metric	0.75	1.5	4.0	6.0	10.0	25.0	50.0	120.00	185.00	240.00	300-400

✦ For non-circuit breaking service only.
✶ Small contacts disengage 1/8" before large contacts to provide time delay in control circuit.
★ Pre-assembled insert should be ordered mounted in barrel.

SERVICE VOLTAGE RATING
A = 240V, D = 600V

Amphenol INDUSTRIAL

Insert Configurations

front face of pin insert shown

22 Contacts

Style	Wire Terminal Type	Shell Size	Insert Type	Dash Number	Catalog Number	Qty.	Size AWG	Service Voltage Rating
Mod II	Crimp	20	Pin	331PN	ZP-20-331PN	2	8	✦E
			Socket	331SN	ZP-20-331SN	20	16	✦D

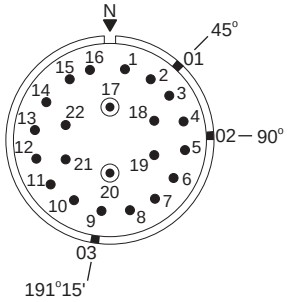

26 Contacts

Style	Wire Terminal Type	Shell Size	Insert Type	Dash Number	Catalog Number	Qty.	Size AWG	Service Voltage Rating
Mod I	Solder	16	Pin	37P	ZP-16-37P	4	12	✦A
			Socket	37S	ZP-16-37S	4	16	✦A
						18	18	✦A

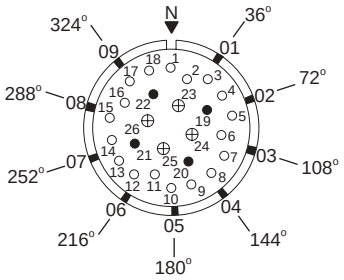

27 Contacts

Style	Wire Terminal Type	Shell Size	Insert Type	Dash Number	Catalog Number	Qty.	Size AWG	Service Voltage Rating
Mod II	Crimp	16	Pin	335PN	ZP-16-335PN	3	12	✦A
			Socket	335SN	ZP-16-335SN	24	16	✦A

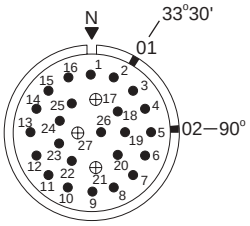

27 Contacts

Style	Wire Terminal Type	Shell Size	Insert Type	Dash Number	Catalog Number	Qty.	Size AWG	Service Voltage Rating
Mod III	Crimp	16	Pin	673PN	★	24	16	A
			Socket	673SN	★	3	12	A

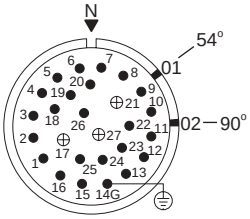

Grounding Contact Termination Symbol

Solder Well	Pressure	Crimp

Contact Symbols	○	●	⊕	○	◉	●	⊕	△	□	○	⊗
Wire Size AWG	18	16	12	10	8	4	1/0	4/0	350 MCM	500 MCM	646-777
Metric	0.75	1.5	4.0	6.0	10.0	25.0	50.0	120.00	185.00	240.00	300-400

✦ For non-circuit breaking service only.
✶ Small contacts disengage 1/8" before large contacts to provide time delay in control circuit.
★ Pre-assembled insert should be ordered mounted in barrel.

SERVICE VOLTAGE RATING
A = 240V, D = 600V

Insert Configurations

front face of pin insert shown

27 Contacts

Style	Wire Terminal Type	Shell Size	Insert Type	Dash Number	Catalog Number	Qty.	Size AWG	Service Voltage Rating
Mod II	Crimp	20	Pin	374PN	ZP-20-374PN	2	4	✦D
			Socket	374SN	ZP-20-374SN	25	12	✦A

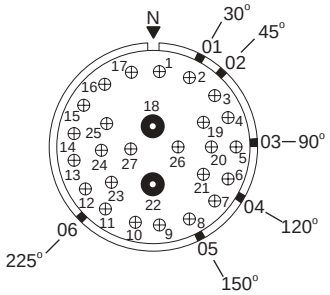

29 Contacts

Style	Wire Terminal Type	Shell Size	Insert Type	Dash Number	Catalog Number	Qty.	Size AWG	Service Voltage Rating
Mod II	Crimp	C28	Pin	328PN	ZP-C28-328PN	4	1/0	✦D
			Socket	328SN	ZP-C28-328SN	2	8	✦D
						23	12	✦A

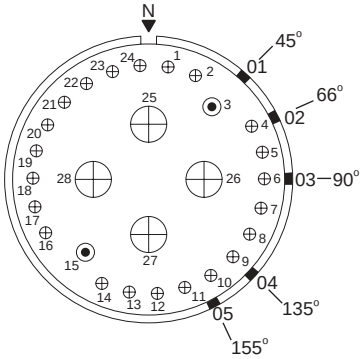

37 Contacts

Style	Wire Terminal Type	Shell Size	Insert Type	Dash Number	Catalog Number	Qty.	Size AWG	Service Voltage Rating
Mod II	Crimp	16	Pin	321PN	ZP-16-321PN	37	16	✦A
			Socket	321SN	ZP-16-321SN			

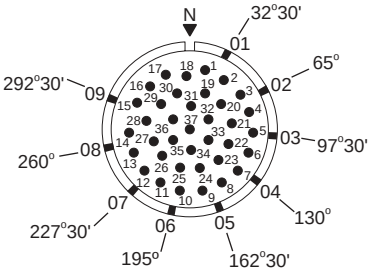

37 Contacts

Style	Wire Terminal Type	Shell Size	Insert Type	Dash Number	Catalog Number	Qty.	Size AWG	Service Voltage Rating
Mod II	Crimp	20	Pin	386PN	ZP-20-386PN	37	12	✦A
			Socket	386SN	ZP-20-386SN			
Mod II	Radsok Crimp	20	Pin	R386PN	ZP-20-R386PN			
			Socket	R386SN	ZP-20-R386SN			

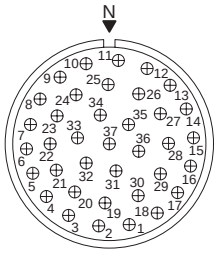

Grounding Contact Termination Symbol

Solder Well	Pressure	Crimp

Contact Symbols	○	●	⊕	○	◉	●	⊕	△	□	○	⊗
Wire Size AWG	18	16	12	10	8	4	1/0	4/0	350 MCM	500 MCM	646-777
Metric	0.75	1.5	4.0	6.0	10.0	25.0	50.0	120.00	185.00	240.00	300-400

✦ For non-circuit breaking service only.
✶ Small contacts disengage 1/8" before large contacts to provide time delay in control circuit.
★ Pre-assembled insert should be ordered mounted in barrel.

SERVICE VOLTAGE RATING
A = 240V, D = 600V

Amphenol INDUSTRIAL

Insert Configurations

front face of pin insert shown

37 Contacts

Style	Wire Terminal Type	Shell Size	Insert Type	Dash Number	Catalog Number	Qty.	Size AWG	Service Voltage Rating
Mod II	Crimp	20	Pin	350PN	ZP-20-350PN	37	12	A
			Socket	350SN	ZP-20-350SN			
Mod II	Radsok Crimp	20	Pin	R350PN	ZP-20-R350PN			
			Socket	R350SN	ZP-20-R350SN			

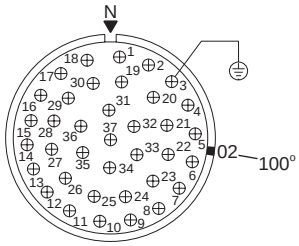

37 Contacts

Style	Wire Terminal Type	Shell Size	Insert Type	Dash Number	Catalog Number	Qty.	Size AWG	Service Voltage Rating
Mod II	Crimp	24	Pin	371PN	ZP-24-371PN	37	16	D
			Socket	371SN	ZP-24-371SN			

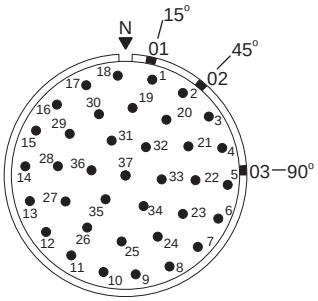

37 Contacts

Style	Wire Terminal Type	Shell Size	Insert Type	Dash Number	Catalog Number	Qty.	Size AWG	Service Voltage Rating
Mod I	Solder	C24	Pin	36P	ZP-C24-36P	2	1/0	D
			Socket	36S	ZP-C24-36S	35	12	A

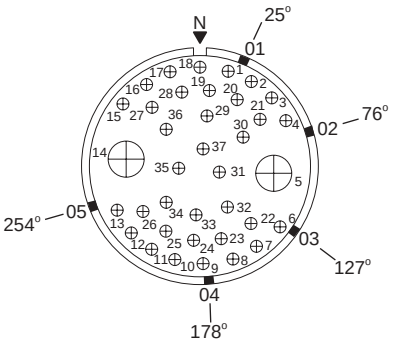

38 Contacts

Style	Wire Terminal Type	Shell Size	Insert Type	Dash Number	Catalog Number	Qty.	Size AWG	Service Voltage Rating
Mod II	Crimp	20	Pin	323PN	ZP-20-323PN	3	10	A
			Socket	323SN	ZP-20-323SN	35	16	A

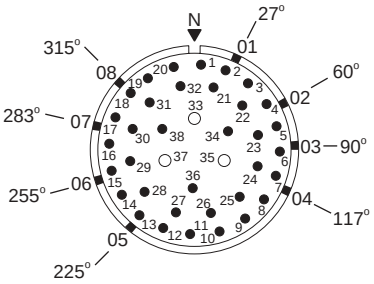

Grounding Contact Termination Symbol

Solder Well	Pressure	Crimp

Contact Symbols	○	●	⊕	○	◉	●	⊕	△	□	○	⊗
Wire Size AWG	18	16	12	10	8	4	1/0	4/0	350 MCM	500 MCM	646-777
Metric	0.75	1.5	4.0	6.0	10.0	25.0	50.0	120.00	185.00	240.00	300-400

✦ For non-circuit breaking service only.
✶ Small contacts disengage 1/8" before large contacts to provide time delay in control circuit.
★ Pre-assembled insert should be ordered mounted in barrel.

SERVICE VOLTAGE RATING
A = 240V, D = 600V

Insert Configurations

front face of pin insert shown

42 Contacts

Style	Wire Terminal Type	Shell Size	Insert Type	Dash Number	Catalog Number	Qty.	Size AWG	Service Voltage Rating
Mod II	Crimp	28	Pin	339PN	ZP-28-339PN	42	12	D
			Socket	339SN	ZP-28-339SN			
Mod II	Radsok Crimp	28	Pin	R339PN	ZP-28-R339PN			
			Socket	R339SN	ZP-28-R339SN			

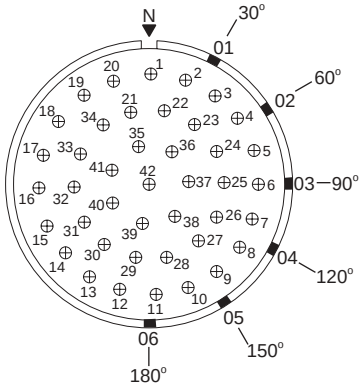

46 Contacts

Style	Wire Terminal Type	Shell Size	Insert Type	Dash Number	Catalog Number	Qty.	Size AWG	Service Voltage Rating
Mod II	Crimp	16	Pin	371PN	ZP-16-371PN	45	18	A
			Socket	371SN	ZP-16-371SN	1	8	A

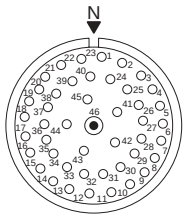

47 Contacts

Style	Wire Terminal Type	Shell Size	Insert Type	Dash Number	Catalog Number	Qty.	Size AWG	Service Voltage Rating
Mod II	Crimp	20	Pin	354PN	ZP-20-354PN	2	8	✦D
			Socket	354SN	ZP-20-354SN	45	16	✦A

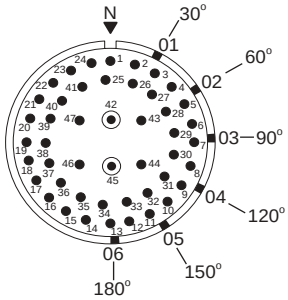

47 Contacts

Style	Wire Terminal Type	Shell Size	Insert Type	Dash Number	Catalog Number	Qty.	Size AWG	Service Voltage Rating
Mod I	Solder	C28	Pin	15P	ZP-C28-15P	1	1/0	D
			Socket	15S	ZP-C28-15S	3	4	D
						43	12	A

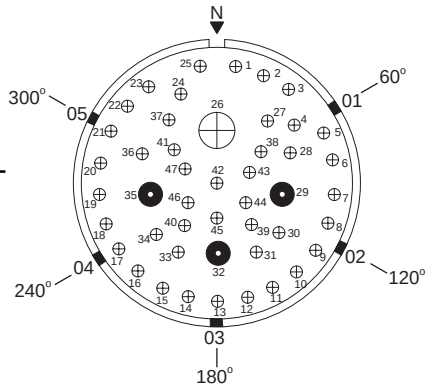

Grounding Contact Termination Symbol

Solder Well	Pressure	Crimp

Contact Symbols	○	●	⊕	○	◉	◉	⊕	△	□	○	⊗
Wire Size AWG	18	16	12	10	8	4	1/0	4/0	350 MCM	500 MCM	646-777
Metric	0.75	1.5	4.0	6.0	10.0	25.0	50.0	120.00	185.00	240.00	300-400

✦ For non-circuit breaking service only.
✶ Small contacts disengage 1/8" before large contacts to provide time delay in control circuit.
★ Pre-assembled insert should be ordered mounted in barrel.

SERVICE VOLTAGE RATING
A = 240V, D = 600V

Insert Configurations

front face of pin insert shown

50 Contacts

Style	Wire Terminal Type	Shell Size	Insert Type	Dash Number	Catalog Number	Qty.	Size AWG	Service Voltage Rating
Mod III	Crimp	20	Pin	673PN	★	4	8	✦D
			Socket	673SN	★	46	16	✦A

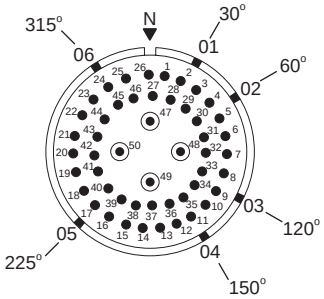

55 Contacts

Style	Wire Terminal Type	Shell Size	Insert Type	Dash Number	Catalog Number	Qty.	Size AWG	Service Voltage Rating
Mod III	Crimp	16	Pin	640PN	★	55	18	✦ Inst.
			Socket	640SN	★			

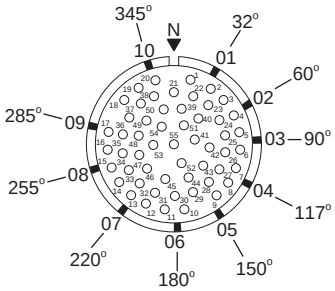

55 Contacts

Style	Wire Terminal Type	Shell Size	Insert Type	Dash Number	Catalog Number	Qty.	Size AWG	Service Voltage Rating
Mod II	Crimp	28	Pin	324PN	ZP-28-324PN	3	8	✦D
			Socket	324SN	ZP-28-324SN	6	4	✦D
						5	12	✦A
						41	16	✦A

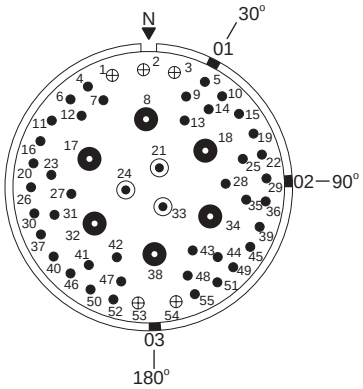

58 Contacts

Style	Wire Terminal Type	Shell Size	Insert Type	Dash Number	Catalog Number	Qty.	Size AWG	Service Voltage Rating
Mod I	Solder	24	Pin	84P	ZP-24-84P	58	12	✦A
			Socket	84S	ZP-24-84S			
Mod II	Crimp	24	Pin	384PN	ZP-24-384PN			
			Socket	384SN	ZP-24-384SN			
Mod II	Radsok Crimp	24	Pin	R384PN	ZP-24-R384PN			
			Socket	R384SN	ZP-24-R384SN			

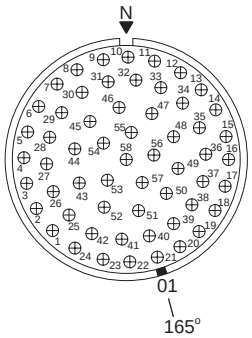

Grounding Contact Termination Symbol

Solder Well	Pressure	Crimp

Contact Symbols	○	●	⊕	○	◉	●	⊕	△	□	○	⊗
Wire Size AWG	18	16	12	10	8	4	1/0	4/0	350 MCM	500 MCM	646-777
Metric	0.75	1.5	4.0	6.0	10.0	25.0	50.0	120.00	185.00	240.00	300-400

✦ For non-circuit breaking service only.
✶ Small contacts disengage 1/8" before large contacts to provide time delay in control circuit.
★ Pre-assembled insert should be ordered mounted in barrel.

SERVICE VOLTAGE RATING
A = 240V, D = 600V

Insert Configurations

front face of pin insert shown

58 Contacts

Style	Wire Terminal Type	Shell Size	Insert Type	Dash Number	Catalog Number	Qty.	Size AWG	Service Voltage Rating
Mod II	Crimp	24	Pin	352PN	ZP-24-352PN	58	12	✦A
			Socket	352SN	ZP-24-352SN			
Mod II	Radsok Crimp	24	Pin	R352PN	ZP-24-R352PN			
			Socket	R352SN	ZP-24-R352SN			

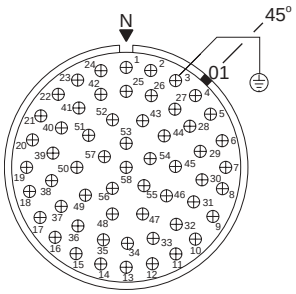

60 Contacts

Style	Wire Terminal Type	Shell Size	Insert Type	Dash Number	Catalog Number	Qty.	Size AWG	Service Voltage Rating
Mod I	Solder	20	Pin	35P	ZP-20-35P	60	16	✦A
			Socket	35S	ZP-20-35S			

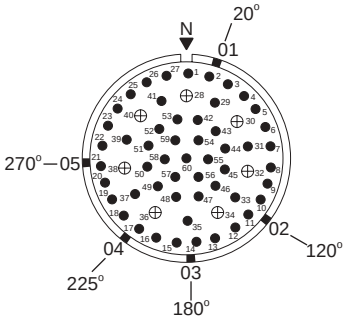

60 Contacts

Style	Wire Terminal Type	Shell Size	Insert Type	Dash Number	Catalog Number	Qty.	Size AWG	Service Voltage Rating
Mod II	Crimp	24	Pin	331PN	ZP-24-331PN	7	12	✦A
			Socket	331SN	ZP-24-331SN	53	16	✦A

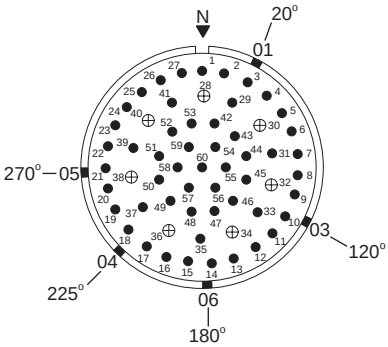

61 Contacts

Style	Wire Terminal Type	Shell Size	Insert Type	Dash Number	Catalog Number	Qty.	Size AWG	Service Voltage Rating
Mod II	Crimp	16	Pin	333PN	ZP-16-333PN	61	18	Inst.
			Socket	333SN	ZP-16-333SN			

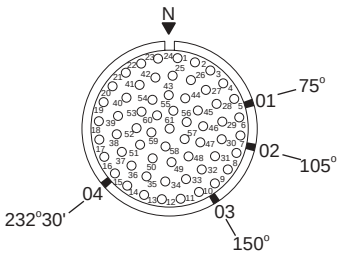

Grounding Contact Termination Symbol

Solder Well	Pressure	Crimp

Contact Symbols	○	●	⊕	○	◉	●	⊕	△	□	○	⊗
Wire Size AWG	18	16	12	10	8	4	1/0	4/0	350 MCM	500 MCM	646-777
Metric	0.75	1.5	4.0	6.0	10.0	25.0	50.0	120.00	185.00	240.00	300-400

✦ For non-circuit breaking service only.
✶ Small contacts disengage 1/8" before large contacts to provide time delay in control circuit.
★ Pre-assembled insert should be ordered mounted in barrel.

SERVICE VOLTAGE RATING
A = 240V, D = 600V

Amphenol INDUSTRIAL

Insert Configurations

front face of pin insert shown

64 Contacts

Style	Wire Terminal Type	Shell Size	Insert Type	Dash Number	Catalog Number	Qty.	Size AWG	Service Voltage Rating
Mod II	Crimp	20	Pin	329PN	ZP-20-329PN	2	10	✦A
			Socket	329SN	ZP-20-329SN	16	16	✦A

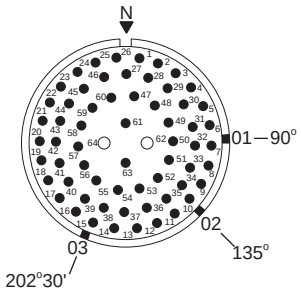

68 Contacts

Style	Wire Terminal Type	Shell Size	Insert Type	Dash Number	Catalog Number	Qty.	Size AWG	Service Voltage Rating
Mod II	Crimp	20	Pin	313PN	ZP-20-313PN	68	18	✦ A
			Socket	313SN	ZP-20-313SN			

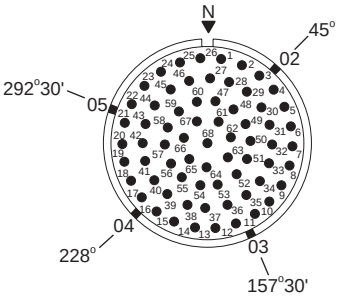

75 Contacts

Style	Wire Terminal Type	Shell Size	Insert Type	Dash Number	Catalog Number	Qty.	Size AWG	Service Voltage Rating
Mod II	Crimp	24	Pin	354PN	ZP-24-354PN	3	8	✦A
			Socket	354SN	ZP-24-354SN	11	12	✦A
						61	16	✦A

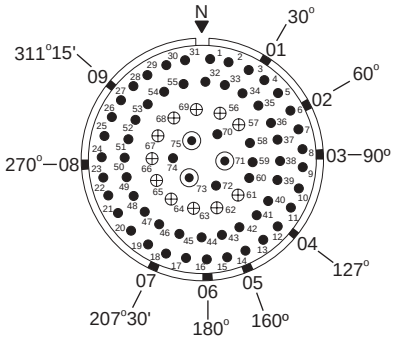

81 Contacts

Style	Wire Terminal Type	Shell Size	Insert Type	Dash Number	Catalog Number	Qty.	Size AWG	Service Voltage Rating
Mod II	Crimp	20	Pin	344PN	ZP-20-344PN	11	12	✦A
			Socket	344SN	ZP-20-344SN	70	18	✦A

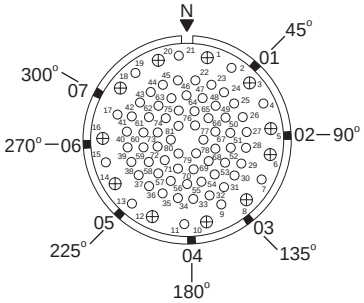

Grounding Contact Termination Symbol

Solder Well	Pressure	Crimp

Contact Symbols	○	●	⊕	○	◉	●	⊕	△	□	○	⊗
Wire Size AWG	18	16	12	10	8	4	1/0	4/0	350 MCM	500 MCM	646-777
Metric	0.75	1.5	4.0	6.0	10.0	25.0	50.0	120.00	185.00	240.00	300-400

✦ For non-circuit breaking service only.
✶ Small contacts disengage 1/8" before large contacts to provide time delay in control circuit.
★ Pre-assembled insert should be ordered mounted in barrel.

SERVICE VOLTAGE RATING
A = 240V, D = 600V

Insert Configurations

front face of pin insert shown

90 Contacts

Style	Wire Terminal Type	Shell Size	Insert Type	Dash Number	Catalog Number	Qty.	Size AWG	Service Voltage Rating
Mod II	Crimp	20	Pin Socket	345PN 345SN	ZP-20-345PN ZP-20-345SN	90	18	✦A

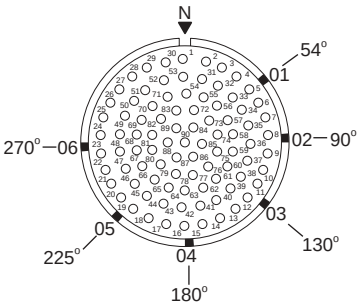

100 Contacts

Style	Wire Terminal Type	Shell Size	Insert Type	Dash Number	Catalog Number	Qty.	Size AWG	Service Voltage Rating
Mod II	Crimp	24	Pin Socket	313PN 313SN	ZP-24-313PN ZP-24-313SN	100	16	✦A

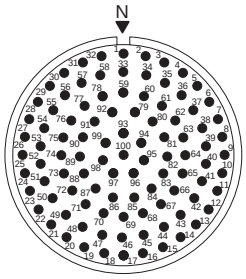

100 Contacts

Style	Wire Terminal Type	Shell Size	Insert Type	Dash Number	Catalog Number	Qty.	Size AWG	Service Voltage Rating
Mod II	Crimp	24	Pin Socket	385PN 385SN	ZP-24-385PN ZP-24-385SN	100	16	A

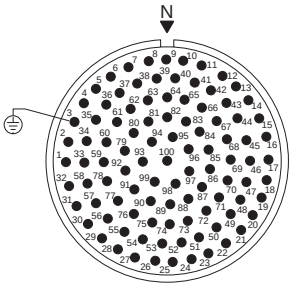

Grounding Contact Termination Symbol

Solder Well	Pressure	Crimp

Contact Symbols	○	•	⊕	○	◉	●	⊕	△	□	○	⊗
Wire Size AWG	18	16	12	10	8	4	1/0	4/0	350 MCM	500 MCM	646-777
Metric	0.75	1.5	4.0	6.0	10.0	25.0	50.0	120.00	185.00	240.00	300-400

✦ For non-circuit breaking service only.
✶ Small contacts disengage 1/8" before large contacts to provide time delay in control circuit.
★ Pre-assembled insert should be ordered mounted in barrel.

SERVICE VOLTAGE RATING
A = 240V, D = 600V

Amphenol INDUSTRIAL

Insert Configurations

front face of pin insert shown

100 Contacts

Style	Wire Terminal Type	Shell Size	Insert Type	Dash Number	Catalog Number	Qty.	Size AWG	Service Voltage Rating
Mod II	Crimp	28	Pin	314PN	ZP-28-314PN	17	12	✦A
			Socket	314SN	ZP-28-314SN	83	16	✦A

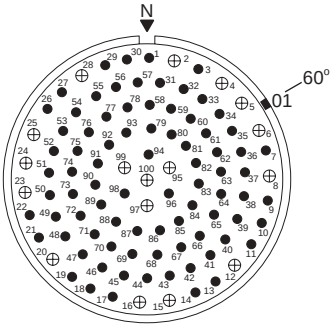

143 Contacts

Style	Wire Terminal Type	Shell Size	Insert Type	Dash Number	Catalog Number	Qty.	Size AWG	Service Voltage Rating
Mod II	Crimp	28	Pin	322PN	ZP-28-322PN	143	16	✦A
			Socket	322SN	ZP-28-322SN			

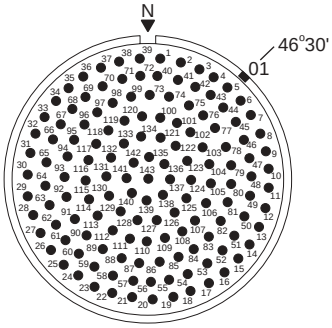

Grounding Contact Termination Symbol

Solder Well	Pressure	Crimp

Contact Symbols	○	●	⊕	○	◉	●	⊕	△	□	○	⊗
Wire Size AWG	18	16	12	10	8	4	1/0	4/0	350 MCM	500 MCM	646-777
Metric	0.75	1.5	4.0	6.0	10.0	25.0	50.0	120.00	185.00	240.00	300-400

✦ For non-circuit breaking service only.
✶ Small contacts disengage 1/8" before large contacts to provide time delay in control circuit.
★ Pre-assembled insert should be ordered mounted in barrel.

SERVICE VOLTAGE RATING
A = 240V, D = 600V

Connector Components
Spare Parts and Accessories

Male Skirt for Straight Plug

Male skirts only for Mod I are designated by a four-digit number.
Example: ZP-W-1312 (Star-Line)

Male skirts only for Mod II are designated by a seven-digit number.
Example: ZP-W-1312-200 (Star-Line)

Mod II inserts must not be used in Mod I shells or Mod I inserts in Mod II shells as the method of accomplishing environmental sealing differs

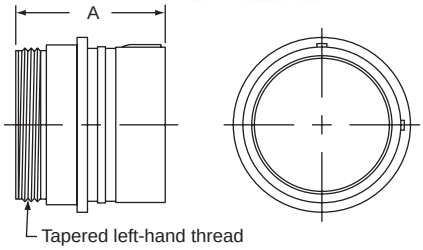

Shell Size	Cat. No. Mod I	DIMENSIONS A
12	ZP-W-1312	2-1/64
16	ZP-W-1316	2-1/64
20	ZP-W-1320	2-1/64
C20	ZP-C-1320	2-33/64
24	ZP-W-1324	2-1/64
C24	ZP-C-1324	2-33/64
28	ZP-W-1328	2-1/64
C28	ZP-C-1328	2-33/64

Plug Shell Assembly

Plug shell assemblies only for Mod I are designated by a four-digit number.
Example: SP-WO-1012 (Star-Lok)

Plug shell assemblies only for Mod II are designated by a seven-digit number.
Example: SP-WO-1012-200 (Star-Lok)

Mod II inserts must not be used in Mod I plug shell assemblies or Mod I inserts in Mod II plug shell assemblies as the method of accomplishing environmental sealing differs

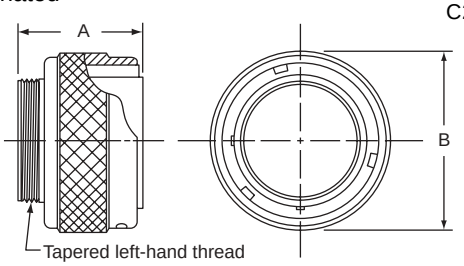

Shell Size	Cat. No. Mod I	DIMENSIONS A	B
12	SP-W-1012	2-1/64	1-29/32
16	SP-W-1016	2-1/64	2-13/32
20	SP-W-1020	2-1/64	2-29/32
C20	SP-C-1020	2-33/64	2-29/32
24	SP-W-1024	2-1/64	3-13/32
C24	SP-C-1024	2-33/64	3-13/32

Female Skirt for In-Line Receptacle

Female skirts only for Mod I are designated by a four-digit number.
Example: ZP-WO-1512 (Star-Line)

Female skirts only for Mod II are designated by a seven-digit number.
Example: ZP-WO-1512-200 (Star-Line)

Mod II inserts must not be used in Mod I shells or Mod I inserts in Mod II shells as the method of accomplishing environmental sealing differs.

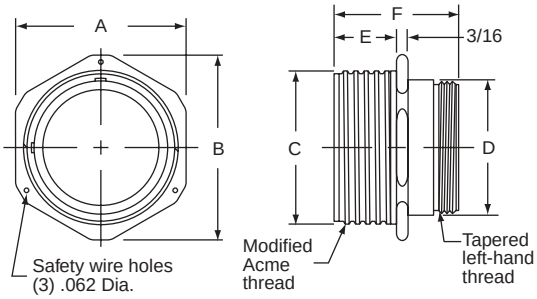

Shell Size	Cat. No. Mod I	DIMENSIONS A	B	C	D	E	F
12	ZP-WO-1512	1-3/4	1-61/64	1-1/2	1-3/32	1	2-1/64
16	ZP-WO-1516	2-1/4	2-31/64	2	1-19/32	1	2-1/64
20	ZP-WO-1520	2-3/4	3-1/32	2-1/2	2-3/32	1	2-1/64
C20	ZP-CO-1520	2-3/4	3-1/32	2-1/2	2-3/32	1-1/2	2-33/64
24	ZP-WO-1524	3-1/4	3-9/16	3	2-19/32	1	2-1/64
C24	ZP-CO-1524	3-1/4	3-9/16	3	2-19/32	1-1/2	2-33/64
28	ZP-WO-1528	3-3/4	4-1/16	3-1/2	3-3/32	1	2-1/64
C28	ZP-CO-1528	3-3/4	4-1/16	3-1/2	3-3/32	1-1/2	2-33/64

Connector Components Spare Parts and Accessories

Basic Barrel for Panel, Square Flange Receptacle

Square flange receptacles only for Mod I are designated by a four digit number.
Example: ZP-WO-1712 (Star-Line)

Square flange receptacles only for Mod II are designated by a seven digit number.
Example: ZP-WO-1712-200 (Star-Line)

Mod II inserts must not be used in Mod I shells or Mod I inserts in Mod II shells as the method of accomplishing environmental sealing differs.

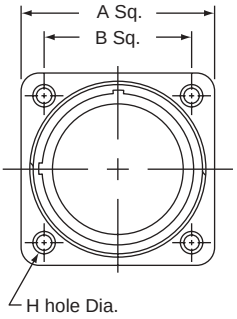

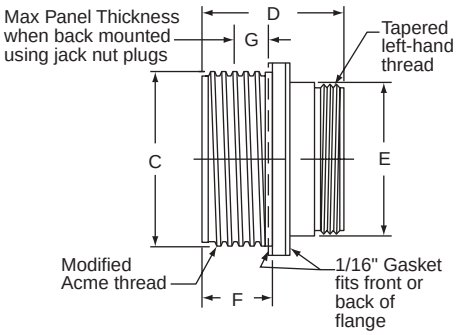

Shell Size	Cat. No. Mod I	DIMENSIONS							
		A	B	C	D	E	F	G	H
12	ZP-WO-1712	1-3/4	1-3/8	1-1/2	2-1/64	1-3/8	1	1/4	11/64
16	ZP-WO-1716	2-1/4	1-11/16	2	2-1/64	1-7/8	1	1/4	13/64
20	ZP-WO-1720	2-3/4	2-3/32	2-1/2	2-1/64	2-3/8	1	1/4	7/32
C20	ZP-CO-1720	2-3/4	2-3/32	2-1/2	2-33/64	2-3/8	1-1/2	3/4	7/32
24	ZP-WO-1724	3-1/4	2-17/32	3	2-1/64	2-7/8	1	1/4	9/32
C24	ZP-CO-1724	3-1/4	2-17/32	3	2-33/64	2-7/8	1-1/2	3/4	9/32
28	ZP-WO-1728	3-3/4	3-1/32	3-1/2	2-1/64	3-3/8	1	1/4	11/32
C28	ZP-CO-1728	3-3/4	3-1/32	3-1/2	2-33/64	3-3/8	1-1/2	3/4	11/32

Drill hole on panel 1/64" larger than Dimension “E” for front mounting or Dimension “C” for back mounting.
**Maximum panel thickness may be increased 1/8" when using Standard Coupling Nut Plugs.

Basic Barrel for Panel, Square Flange Receptacle

Square flange receptacles only for Mod I are designated by a four digit number.
Example: SP-WO-1712 (Star-Lok)

Square flange receptacles only for Mod II are designated by a seven digit number.
Example: SP-WO-1712-200 (Star-Lok)

Mod II inserts must not be used in Mod I shells or Mod I inserts in Mod II shells as the method of accomplishing environmental sealing differs.

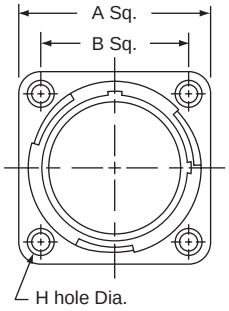

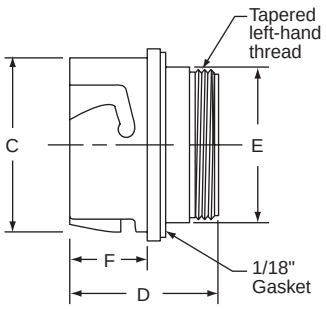

Shell Size	Cat. No. Mod I	DIMENSIONS						
		A	B	C	D	E	F	H
12	SP-WO-1712	1-3/4	1-3/8	1-1/2	2-3/32	1-3/8	1-3/32	3/16
16	SP-WO-1716	2-1/4	1-11/16	2	2-3/32	1-7/8	1-3/32	13/64
20	SP-WO-1720	2-3/4	2-3/32	2-1/2	2-3/32	2-3/8	1-3/32	17/64
C20	SP-CO-1720	2-3/4	2-3/32	2-1/2	2-19/32	2-3/8	1-19/32	17/64
24	SP-WO-1724	3-1/4	2-17/32	3	2-3/32	2-7/8	1-3/32	17/64
C24	SP-CO-1724	3-1/4	2-17/32	3	2-19/32	2-7/8	1-19/32	17/64

When mounting two or more receptacles to a panel, a certain distance must be kept, one from the other, so that the coupling nut of one plug does not interfere with the coupling nut of another.

For mixed-form sizes, add dimension “A” for each and divide by two.

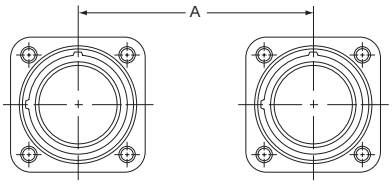

Shell Size	Dimension A
12	3
16	3-1/2
20/C20	4-1/4
24/C24	4-3/4
28/C28	5-1/4

Connector Accessories

Cable Adapters Used on Types ZPLD & ZRLD

To order cable adapters complete with grommet, substitute the cable diameter code number for the delta ▲ (see page 67).

Shell	Standard Style Catalog No.	Long Style Catalog No.	Extra Long Style Catalog No.
12	ZP-W-2012-▲-00	ZP-W-2412-▲-00	ZP-W-2912-▲-00
16	ZP-W-2016-▲-00	ZP-W-2416-▲-00	ZP-W-2916-▲-00
20 & C20	ZP-W-2020-▲-00	ZP-W-2420-▲-00	ZP-W-2920-▲-00
24 & C24	ZP-W-2024-▲-00	ZP-W-2424-▲-00	ZP-W-2924-▲-00
28 & C28	ZP-W-2028-▲-00	ZP-W-2428-▲-00	ZP-W-2928-▲-00

Cable Adapters Used on Types ZPLM & ZRLM

Shell	Standard Style Catalog No.	Long Style Catalog No.	Extra Long Style Catalog No.
12	ZP-W-2012-▲-53	ZP-W-2412-▲-53	ZP-W-2912-▲-53
16	ZP-W-2016-▲-53	ZP-W-2416-▲-53	ZP-W-2916-▲-53
20 & C20	ZP-W-2020-▲-53	ZP-W-2420-▲-53	ZP-W-2920-▲-53
24 & C24	ZP-W-2024-▲-53	ZP-W-2424-▲-53	ZP-W-2924-▲-53
28 & C28	ZP-W-2028-▲-53	ZP-W-2428-▲-53	ZP-W-2928-▲-53

Cable Adapters Used on Types ZPLK & ZRLK

Shell	Standard Style Catalog No.	Long Style Catalog No.	Extra Long Style Catalog No.
12	ZP-W-2012-▲-50	ZP-W-2412-▲-50	ZP-W-2912-▲-50
16	ZP-W-2016-▲-50	ZP-W-2416-▲-50	ZP-W-2916-▲-50
20 & C20	ZP-W-2020-▲-50	ZP-W-2420-▲-50	ZP-W-2920-▲-50
24 & C24	ZP-W-2024-▲-50	ZP-W-2424-▲-50	ZP-W-2924-▲-50
28 & C28	ZP-W-2028-▲-50	ZP-W-2428-▲-50	ZP-W-2928-▲-50

NOTE: Cable adapters with potting ports and molding accessories are also available in all shell sizes-consult Amphenol Industrial Operations.

Dimensions

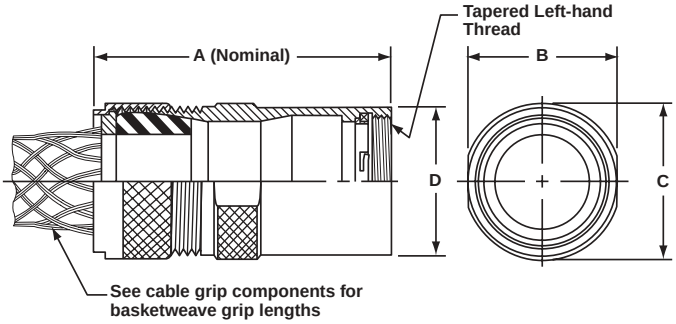

Shell Size	A Standard	A Long	A Extra Long	B	C	D
12	3-29/32	6-5/32	7-13/32	1-13/32	1-1/2	1-3/8
16	4-5/32	6-13/32	7-21/32	1-29/32	2	1-7/8
20 & C20	4-21/32	6-29/32	8-5/32	2-13/32	2-1/2	2-3/8
24 & C24	5-5/32	7-13/32	8-21/32	2-29/32	3	2-7/8
28 &C28	5-21/32	7-21/32	8-29/32	3-13/32	3-1/2	3-3/8

Cable Grip Components

Gland washers are not required when grommets are used with basket weave cable grips.

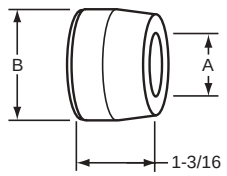

Grommets

Shell Size	Washer Dimensions A	Washer Dimensions B
12	See cable dia. column "A" for cable range	1-7/32
16		1-3/4
20 & C20		2-7/32
24 & C24		2-3/4
28 & C28		3-1/4

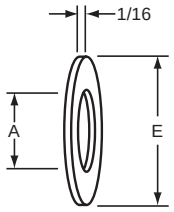

Gland Washers

Shell Size	Washer Dimensions A	Washer Dimensions B
12	See cable dia. column "A" for cable range	1-1/4
16		1-3/4
20 & C20		2-1/4
24 & C24		2-3/4
28 & C28		3-1/4

* Substitute Symbol for ▲ in Cable Adapter Catalog Number

Shell Size	Cable Dia. Dimension Min.	Cable Dia. Dimension Max.	Cable Dia. Code No.*	Grommets Oil Resistant Rubber Cat. No.	Gland Washer Steel Cat. No.	Basket Weave Grips Stainless Steel Cat. No.	Basket Weave Grips Nominal Length Inches
12	.062	.125	02	ZP-6312-2C	ZP-8012-4E	ZP-5012-4E	3
	.125	.250	04	ZP-6312-4C			
	.250	.375	06	ZP-6312-6C	ZP-8012-8E	ZP-5012-6E	4
	.375	.500	08	ZP-6312-8C		ZP-5012-8E	5
	.500	.625	10	ZP-6312-10C	ZP-8012-12E	ZP-5012-10E	6
	.625	.750	12	ZP-6312-12C		ZP-5012-12E	7
	.750	.875	14	ZP-6312-14C	ZP-8012-15E	ZP-5012-14E	7-1/2
	.875	.937	15	ZP-6312-15C		ZP-5012-15E	8
16	.250	.375	06	ZP-6316-6C	ZP-8016-8E	ZP-5016-6E	4
	.375	.500	08	ZP-6316-8C		ZP-5016-8E	5
	.500	.625	10	ZP-6316-10C	ZP-8016-12E	ZP-5016-10E	6
	.625	.750	12	ZP-6316-12C		ZP-5016-12E	7
	.750	.875	14	ZP-6316-14c	zp-8016-16E	ZP-5016-14E	7-1/2
	.875	1.000	16	ZP-6316-16C		ZP-5016-16E	8-1/2
	1.000	1.125	18	ZP-6316-18C	ZP-8016-20E	ZP-5016-18E	9
	1.125	1.250	20	ZP-6316-20C		ZP-5016-20E	10
	1.250	1.375	22	ZP-6316-22C	ZP-8016-23E	ZP-5016-23E	10-1/2
	1.375	1.437	23	ZP-6316-23C			
20/C20	.500	.625	10	ZP-6320-10C	ZP-8020-12E	ZP-5020-10E	6
	.625	.750	12	ZP-6320-12C		ZP-5020-14E	7-1/2
	.750	.875	14	ZP-6320-14C	ZP-8020-16E	ZP-5020-14E	7-1/2
	.875	1.000	16	ZP-6320-16C		ZP-5020-18E	9
	1.000	1.125	18	ZP-6320-18C	ZP-8020-20E	ZP-5020-18E	9
	1.125	1.250	20	ZP-6320-20C		ZP-5020-20E	10
	1.250	1.375	22	ZP-6320-22C	ZP-8020-24E	ZP-5020-24E	11
	1.375	1.500	24	ZP-6320-24C			
	1.500	1.625	26	ZP-6320-26C	ZP-8020-28E	ZP-5020-28E	13
	1.625	1.750	28	ZP-6320-28C			
	1.750	1.875	30	ZP-6320-30C	ZP-8020-31E	ZP-5020-31E	14-1/2
	1.875	1.937	31	ZP-6320-31C			
24/C24	.875	1.000	16	ZP-6324-16C	ZP-8024-16E	ZP-5024-16E	8-1/2
	1.000	1.125	18	ZP-6324-18C	ZP-8024-20E	ZP-5024-20E	10
	1.125	1.250	20	ZP-6324-20C			
	1.250	1.375	22	ZP-6324-22C	ZP-8024-24E	ZP-5024-24E	11
	1.375	1.500	24	ZP-6324-24C			
	1.500	1.625	26	ZP-6324-26C	ZP-8024-28E	ZP-5024-28E	13
	1.625	1.750	28	ZP-6324-28C			
	1.750	1.875	30	ZP-6324-30C	ZP-8024-32E	ZP-5024-32E	15
	1.875	2.000	32	ZP-6324-32C			
	2.000	2.125	34	ZP-6324-34C	ZP-8024-36E	ZP-5024-36E	16
	2.125	2.250	36	ZP-6324-36C			
	2.250	2.375	38	ZP-6324-38C	ZP-8024-39E	ZP-5024-39E	17-1/2
	2.375	2.437	39	ZP-6324-39C			
28/C28	1.375	1.500	24	ZP-6328-24C	ZP-8028-24E	ZP-5028-28E	13
	1.500	1.625	26	ZP-6328-26C	ZP-8028-28E	ZP5028-28E	13
	1.625	1.750	28	ZP-6328-28C			
	1.750	1.875	30	ZP-6328-30C	ZP-8028-32E	ZP-5028-32E	15
	1.875	2.000	32	ZP-6328-32C			
	2.000	2.125	34	ZP-6328-34C	ZP-8028-36E	ZP-5028-36E	16
	2.125	2.250	36	ZP-6328-36C			
	2.250	2.375	38	ZP-6328-38C	ZP-8028-40E	ZP-5028-40E	17-1/2
	2.375	2.500	40	ZP-6328-40C			
	2.500	2.625	42	ZP-6328-42C	ZP-8028-44E	ZP-5028-46E	19
	2.625	2.750	44	ZP-6328-44C			
	2.750	2.875	46	ZP-6328-46C	ZP-8028-46E	ZP-5028-46E	19

Connector Accessories

Standard and Jacking Coupling Nuts

(Star-Line only)

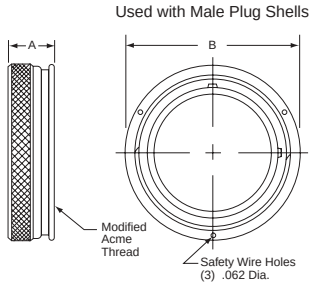

Shell Size	Catalog No. Standard	DIMENSIONS A	DIMENSIONS B
12	ZP-7012-10A	47/64	1-13/16
16	ZP-7016-10A	47/64	2-5/16
20/C20	ZP-7020-10A	47/64	2-13/16
24/C24	ZP-7024-10A	47/64	3-5/16
28/C28	ZP-7028-10A	47/64	3-13/16

Shell Size	Catalog No. Jacking	DIMENSIONS A	DIMENSIONS B
12	ZP-7012-30A	1-1/32	1-13/16
16	ZP-7016-30A	1-1/32	2-5/16
20/C20	ZP-7020-30A	1-1/32	2-13/16
24/C24	ZP-7024-30A	1-1/32	3-5/16
28/C28	ZP-7028-30A	1-1/32	3-13/16

Insert Clamp Nuts

Used when open-back wiring is desired behind panelboards or within large junction boxes on which the basic barrel is mounted

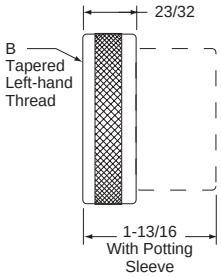

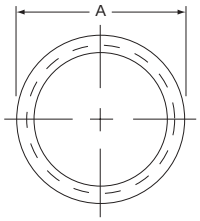

Shell Size	Without Potting Sleeve Cat. No.	With Type 8200 Potting Sleeve Cat. No.	DIMENSIONS A	DIMENSIONS B
12	ZP-W-7512	ZP-W-7512-B	1-11/32	1-3/32
16	ZP-W-7516	ZP-W-7516-B	1-27/32	1-19/32
20 & C20	ZP-W-7520	ZP-W-7520-B	1-11/32	2-3/32
24 & C24	ZP-W-7524	ZP-W-7524-B	2-27/32	2-19/32
28 & C28	ZP-W-7528	ZP-W-7528-B	3-11/32	3-3/32

Potting Sleeve

For use with insert clamp nut or panel board adapter to accept compound for sealing wire terminals. Potting sleeves are not for use with pressure-type contact units with insulator extension at back.

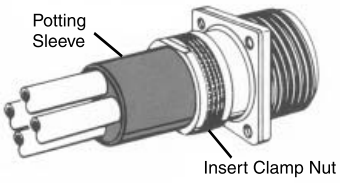

Shell Size	Catalog No.	Overall Length	DIMENSIONS O. D.	DIMENSIONS I. D.
12	ZP-8212-11	1-1/4	1-3/64	55/64
16	ZP-8216-11	1-1/4	1-35/64	1-23/64
20 & C20	ZP-8220-11	1-1/4	2-3/64	1-55/64
24 & C24	ZP-8224-11	1-1/4	2-35/64	2-23/64
28 & C28	ZP-8228-11	1-1/4	2-63/64	2-51/64

Metal Potting Adapter

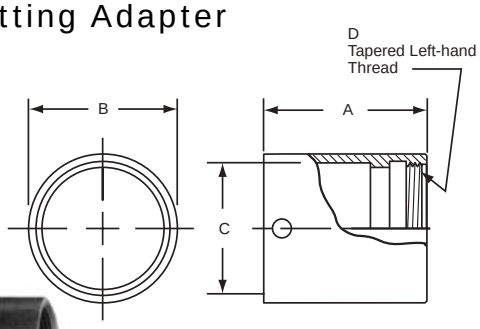

Shell Size	Standard Length Cat. No.	DIMENSIONS A	DIMENSIONS B	DIMENSIONS C	DIMENSIONS D
12	ZP-W-8612-11	2-15/32	1.4675	1.12	1-3/32
16	ZP-W-8616-11	2-15/32	1.8575	1.62	1-19/32
20 & C20	ZP-W-8620-11	2-15/32	2.3675	2.12	2-3/32
24 & C24	ZP-W-8624-11	2-15/32	2.8425	2.62	2-19/32
28 & C28	ZP-W-8628-11	2-15/32	3.4325	3.12	3-3/32

Shell Size	Short Version Cat. No.	DIMENSIONS A	DIMENSIONS B	DIMENSIONS C	DIMENSIONS D
12	ZP-W-8612-12	1-3/4	1.4675	1.12	1-3/32
16	ZP-W-8616-12	1-3/4	1.8575	1.62	1-19/32
20 & C20	ZP-W-8620-12	2	2.3675	2.12	2-3/32
24 & C24	NA				
28 & C28	NA				

Cable Adapter Components and Accessories

Conduit Adapters Tapped for Conduit

For use with all inserts other than those with pressure terminals.
Internal tapered pipe thread takes various types of threaded connectors.

Shell Size	Conduit Tap Size	Catalog No.	DIMENSIONS				
			A	B	C	D	E
12	3/4	ZP-W-2812	2-5/8	1-13/32	1-1/2	1-3/8	3/4
16	1-1/4	ZP-W-2816	2-3/4	1-29/32	2	1-7/8	1-1/4
20 & C20	1-1/2	ZP-W-2820	2-7/8	2-13/32	2-1/2	2-3/8	1-1/2
24 & C24	2	ZP-W-2824	3	2-29/32	3	2-7/8	2
28 & C28	2-1/2	ZP-W-2828	3-15/32	3-13/32	3-1/2	3-3/8	2-1/2

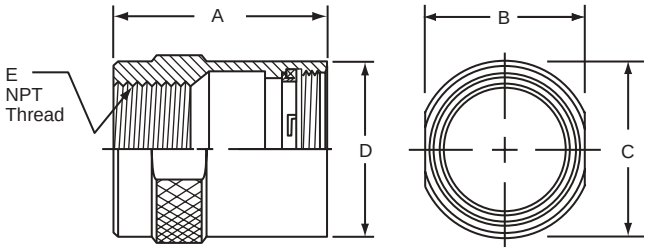

Cable Adapter

Thread Size	Shell Size	Standard Style Cat. No.	Long Style Cat. No.	Extra Long Style Cat. No.	DIMENSIONS			
					A			B
					Std.	Lg.	X Lg.	
1-3/8-12	12	ZP-W-2012	ZP-W-2412	ZP-W-2912	3	5-1/4	6-1/2	1-3/8
1-7/8-12	16	ZP-W-2016	ZP-W-2416	ZP-W-2916	3-1/4	5-1/2	6-3/4	1-7/8
2-3/8-12	20 & C20	ZP-W-2020	ZP-W-2420	ZP-W-2920	3-3/4	6	7-1/4	2-3/8
2-7/8-12	24 & C24	ZP-W-2024	ZP-W-2424	ZP-W-2924	4-1/4	6-1/2	7-3/4	2-7/8
3-3/8-12	28 & C28	ZP-W-2028	ZP-W-2428	ZP-W-2928	4-3/4	6-3/4	8	3-3/8

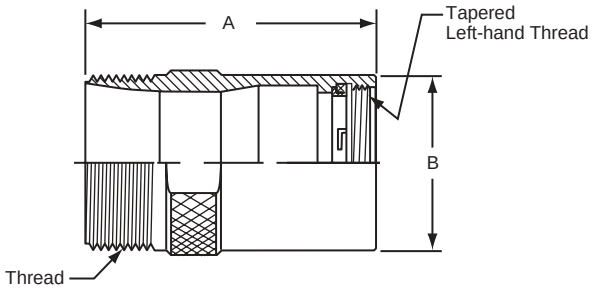

Cable Adapter Components and Accessories

Mechanical Clamp Nut

Shell Size	Catalog No.	DIMENSIONS			
		A	B	C	D
12	ZP-W-5312	2-3/8	1-3/4	7/8	2
16	ZP-W-5316	3	2-1/4	15/16	2-1/16
20 & C20	ZP-W-5320	3-3/4	2-3/4	1	2-1/8
24 & C24	ZP-W-5324	4-1/2	3-1/4	1-1/16	2-3/16
28 & C28	ZP-W-5328	5-1/8	3-3/4	1-1/8	2-1/4

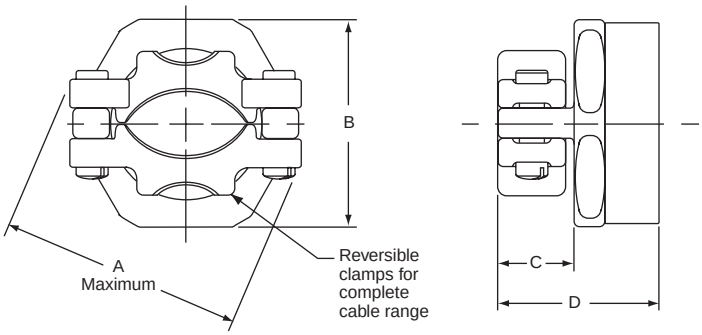

Panelboard Adapters
(Star-Line only)

For Basic Barrels. Used when a completely external mounting is required. Gasket furnished may be used for front panel mounting only.

Shell Size	Catalog No.	DIMENSIONS								
		A	B	C	D	E	F	G	H	J
12	ZP-W-2112	1-5/8	1-1/4	1-1/8	1-3/32	3/32	9/16	3/4	1-3/8	3/16
16	ZP-W-2116	2-1/8	1-11/16	1-5/8	1-19/32	1/8	9/16	25/32	1-7/8	7/32
20 & C20	ZP-W-2120	2-5/8	2-3/32	2-1/8	2-3/32	5/32	9/16	13/16	2-3/8	9/32
24 & C24	ZP-W-2124	3-1/8	2-17/32	2-5/8	2-19/32	3/16	9/16	27/32	2-7/8	11/32
28 & C28	ZP-W-2128	3-3/4	3-1/32	3-1/8	2-3/32	9/32	29/64	27/32	3-3/8	11/32

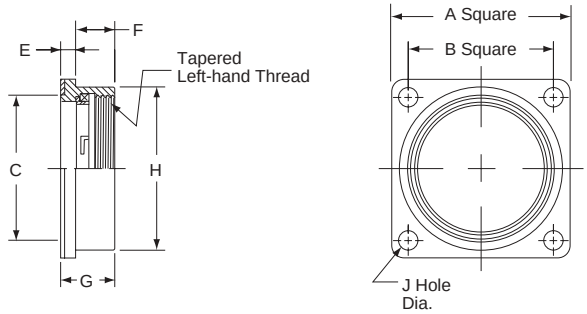

Cable Adapter Components and Accessories

Transition Adapters

Transition adapters provide for using cable adapters one shell size larger than that of the basic barrel selected. They are used when terminating shielded cables require an increase in adapter diameter for additional wiring space.

Shell Size	Adapter Shell Size	DIMENSIONS				
		Catalog No.	A	B	C	D
12	16	ZP-W-2316-40	2	2-15/64	1-19/32	1-3/32
16	20 & C20	ZP-W-2320-40	2-1/2	2-49/64	2-3/32	1-19/32
20 & C20	24 & C24	ZP-W-2324-40	3	3-9/32	2-19/32	2-3/32
24 & C24	28 & C28	ZP-W-2328-40	3-1/2	3-15/16	3-3/32	2-19/32

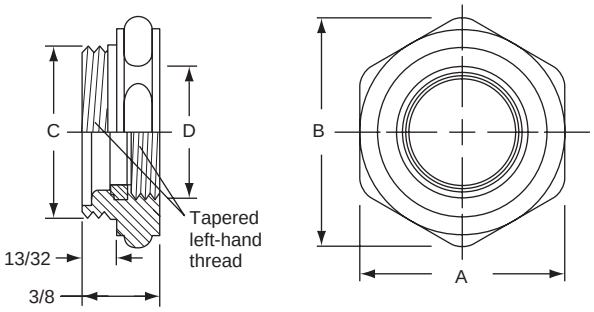

Gland Nut

Use plain, or with basket weave cable grip

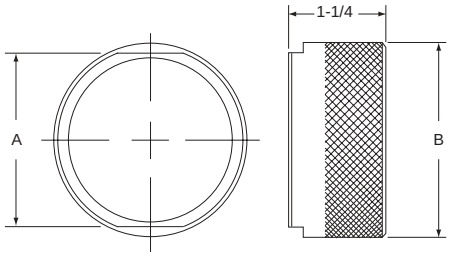

Shell Size	Catalog No.	DIMENSIONS	
		A	B
12	ZP-7312-10A	1-1/2	1-9/32
16	ZP-7316-10A	2	1-25/32
20 & C20	ZP-7320-10A	2-1/2	2-9/32
24 & C24	ZP-7324-10A	3	2-25/32
28 & C28	ZP-7328-10A	3-1/2	3-9/32

Safety Jam Nuts

To securely lock plug coupling nut or threaded dust cap. Jam nut cannot be used on barrels with hinged spring cover.

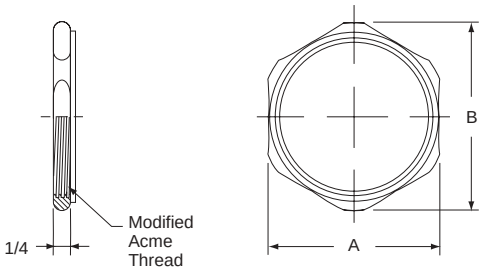

Shell Size	Catalog No.	DIMENSIONS	
		A	B
12	ZP-7212-10A	1-3/4	1-61/64
16	ZP-7216-10A	2-1/4	1-32/64
20 & C20	ZP-7220-10A	2-3/4	3-1/2
24 & C24	ZP-7224-10A	3-1/4	3-9/16

Connector Accessories - Protection Covers & Caps

Environmental Covers with Chain

Environmental covers are furnished with a six-inch length of stainless steel link chain. The chain is freely attached to a shouldered swivel post to avoid twisting when covers are applied or removed. The opposite end has a stainless steel ring for back of barrel attachment or a stainless steel eyelet for flange screw or separate screw attachment.

Example: ZP-W-5512-A (Starline) **SP-W-5512-A** (Star-Lok)

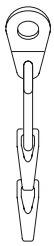

APPLICATION:
RING TYPE: For use with plugs and inline receptacles. To assemble slide ring over back end of barrel before applying cable adapter.
EYELET TYPE: For use with flange mount plugs and flange mount receptacles. To assemble attach eyelet to flange mounting screw or drill and tap hole in adjacent mounting surface.

Threaded Cap for Plugs

Shell Size	Cover Catalog No. with Ring and Chain	Cover Catalog No. with Eyelet and Chain	DIMENSIONS A	D	E	F
12	_P-W-5512-A	_P-WF-5512-A	1-1/2	1-1/2	1-1/4	11/64
16	_P-W-5516-A	_P-WF-5516-A	2	1-1/2	1-3/4	13/64
20	_P-W-5520-A	_P-WF-5520-A	2-1/2	1-1/2	2-1/4	7/32
C20	_P-C-5520-A	_P-CF-5520-A	2-1/2	2	2-1/4	7/32
24	_P-W-5524-A	_P-WF-5524-A	3	1-1/2	2-3/4	9/32
C24	_P-C-5524-A	_P-CF-5524-A	3	2	2-3/4	9/32
28	ZP-W-5528-A	ZP-WF-5528-A	3-1/2	1-1/2	3-1/4	11/32
C28	ZP-C-5528-A	ZP-CF-5528-A	3-1/2	2	3-1/4	11/32

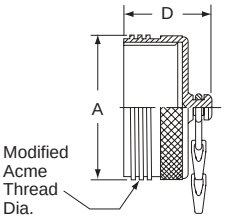

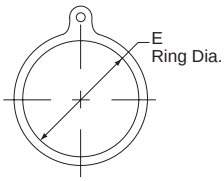

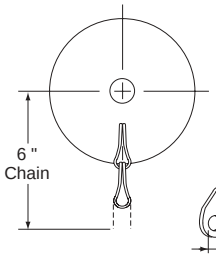

Threaded Cap for Receptacles

Cap has a captive gasket for sealing.

Shell Size	Cover Catalog No. with Ring and Chain	Cover Catalog No. with Eyelet and Chain	DIMENSIONS E	F	G
12	_P-W-5612-A	_P-WF-5612-A	1-1/4	11/64	1-23/32
16	_P-W-5616-A	_P-WF-5616-A	1-3/4	13/64	2-7/32
20/C20	_P-W-5620-A	_P-WF-5620-A	2-1/4	7/32	2-23/32
24/C24	_P-W-5624-A	_P-WF-5624-A	2-3/4	9/32	3-7/32
28/C28	ZP-W-5628-A	ZP-WF-5628-A	3-1/4	11/32	3-23/32

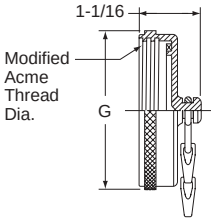

Connector Accessories - Protection Covers & Caps

Hinged Spring Door Covers-Gasketed

Covers have a stainless steel band to clamp over the coupling thread of female receptacles. The cover plate with a captive rubber gasket is pressed aluminum. A self-aligning seal is assured by the floating action of the cover on the center stainless-steel shouldered post. The hinge arm and support are machined aluminum extrusions.

Shell Size	Short Hinged Type Catalog No.	DIMENSIONS A	B	C
12	ZP-C-5712	1-19/32	1-1/2	2-1/2
16	ZP-C-5716	1-19/32	1-3/4	2-3/4
20 & C20	ZP-C-5720	1-41/64	2-9/64	3-9/16
24 & C24	ZP-C-5724	1-41/64	2-25/64	3-25/64
28 & C28	ZP-C-5728	1-41/64	2-5/8	3-5/8

APPLICATION:
SHORT HINGED TYPE:
To clear standard coupling nut - Use with Square Flange Receptacles when front or back mounted.

Shell Size	Long Hinged Type Catalog No.	DIMENSIONS A1	B	C
12	ZP-C-5712-14	1-23/32	1-1/2	2-1/2
16	ZP-C-5716-14	1-23/32	1-3/4	2-3/4
20 & C20	ZP-C-5720-14	1-49/64	2-9/64	3-9/16
24 & C24	ZP-C-5724-14	1-49/64	2-25/64	3-25/64
28 & C28	ZP-C-5728-14	1-41/64	2-5/8	3-5/8

APPLICATION:
LONG HINGED TYPE:
To clear coupling jack nut - Use with Square Flange Receptacles when front mounted only.

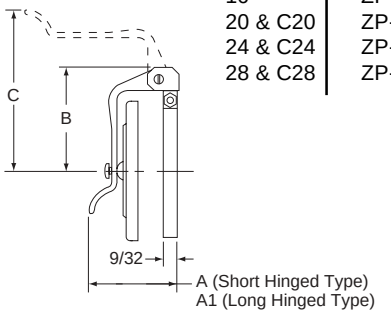

Plastic Dust Caps

For temporary protection of assembled barrels while in storage and shipment.

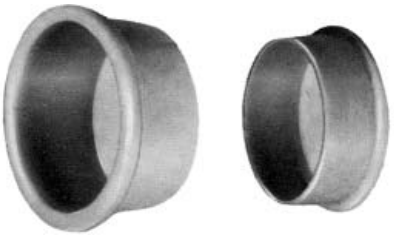

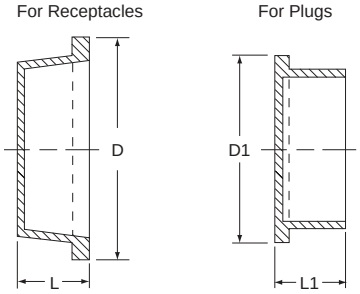

Shell Size	Receptacle Caps Catalog No.	DIMENSIONS D	L
12	ZP-5612-11	1-3/4	5/8
16	ZP-5616-11	2-1/4	11/16
20 & C20	ZP-5620-11	2-22/32	21/32
24 & C24	ZP-5624-11	3-7/32	21/32
28 & C28	ZP-5628-11	3-15/16	1/2

Shell Size	Plug Caps Catalog No.	DIMENSIONS D1	L1
12	ZP-5512-11	1-13/32	11/16
16	ZP-5516-11	1-29/32	11/16
20 & C20	ZP-5520-11	2-3/8	11/16
24 & C24	ZP-5524-11	2-29/32	11/16
28 & C28	ZP-5528-11	3-11/16	1/2

Conduit System Accessories

FS and FD Conduit Adapter Covers and Conduit Fitting Bodies

Adapter covers and Bodies have environmental resistance adequate for most general applications.
All adapter covers are supplied with screws and clips for mounting receptacle as well as bolts, washers and gasket for mounting cover to panel or conduit fitting body.
Cast aluminum alloy adapter covers accept type ZRLP barrels.

Conduit Adapter Covers - FS and FD Type

Style	Shell Size	Adapter Cover Catalog No.	DIMENSIONS (Including Barrel) A	B	C	D	E
Straight	12	ZP-C-2512-11	2-7/8	4-5/16	1-1/2	3-1/4	1-7/8
	16	ZP-C-2516-11					
45 Degree	12	ZP-C-2512-13	2-7/8	4-5/16	2-5/16	3-1/4	1-7/8
	16	ZP-C-2516-13					

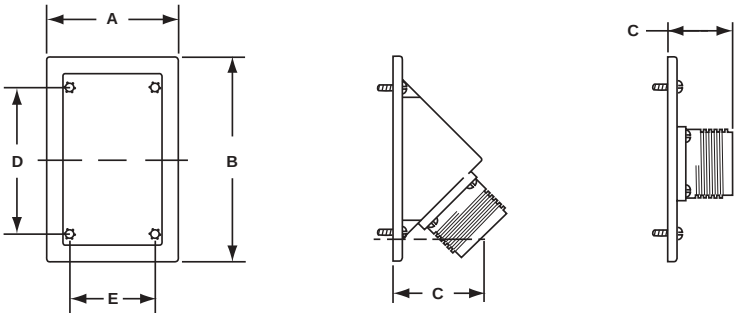

Conduit Fitting Bodies - FS and FD Type available in die cast copper-free aluminum or cadmium plated ferrous alloy

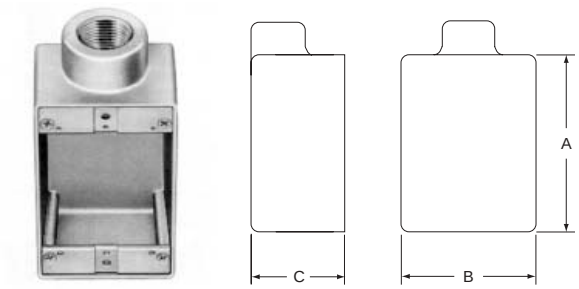

Die Cast Copper-Free Aluminum Type	Shell Size	Hub Size	Conduit Body Catalog No.	DIMENSIONS A	B	C
FS	12	1/2	N-FS18	4-9/16	2-13/16	2-1/16
	12	3/4	N-FS28	4-9/16	2-13/16	2-1/16
	12	1	N-FS38	4-9/16	2-13/16	2-1/16

Cadmium Plated Ferrous Alloy Type	Shell Size	Hub Size	Conduit Body Catalog No.	DIMENSIONS A	B	C
FD	16	1	N-FD38	4-9/16	2-13/16	3-1/16

Note: 1/2" and 3/4" hub deep junction boxes information available upon request.

Conduit System Accessories

Watertight Conduit Adapter Covers and Conduit Fitting Bodies

Adapter covers and Bodies have environmental resistance adequate for most general applications.
All adapter covers are supplied with screws and clips for mounting receptacle as well as bolts, washers and gasket for mounting cover to panel or conduit fitting body.
Cast aluminum alloy adapter covers accept type ZRLP barrels.

STRAIGHT COVER

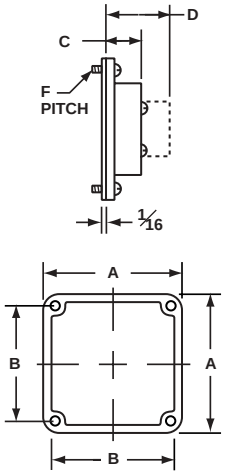

STANDARD COVER

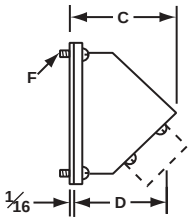

DEEP COVER

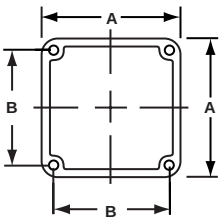

FITTING DIMENSIONS

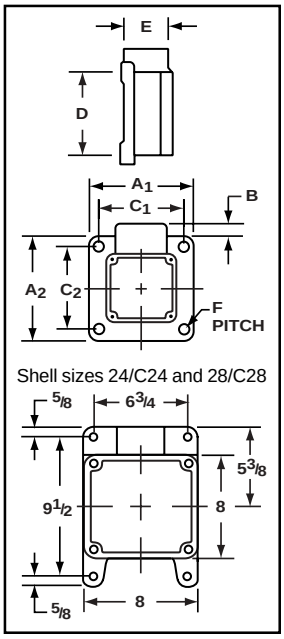

CONDUIT FITTING BODY
Mount with hub at top, bottom or either side.

Conduit Adapter Covers - Watertight Type

Style	Shell Size	Adapter Cover Catalog No.	DIMENSIONS (Including Barrel) A	B	C	D	F Pitch UNC-2B
Straight	12	ZP-C-2512-10	4-3/16	3-9/16	1	1-27/32	1/4-20
	16	ZP-C-2516-10	4-3/16	3-9/16	1	1-27/32	1/4-20
	20/C20	ZP-C-2520-10	4-1/2	3-7/8	1-7/32	2-1/16	1/4-20
	24	ZP-C-2524-10	8	7	1-1/2	2-9/16	1/2-13
	C24	ZP-C-2524-10	8	7	1-1/2	2-27/32	1/2-13
	28	ZP-C-2528-10	8	7	1-1/2	2-9/32	1/2-13
	C28	ZP-C-2528-10	8	7	1-1/2	2-25/32	1/2-13

Above should not be used with pressure-type contact inserts.

Conduit Adapter Covers cont.

Shell Size	Adapter Cover Style: Standard Cat. No.	Deep Cat. No.	DIMENSIONS (Including Barrel) A	B	C	D	F Pitch UNC-2B
12	ZP-C-2512-12		4-3/16	3-9/16	2-13/16	2-7/16	1/4-20
16	ZP-C-2516-12		4-3/16	3-9/16	2-15/16	2-17/32	1/4-20
16		P-202704-16	4-3/16	3-9/16	4-7/16	4-1/16	1/4-20
20	ZP-C-2520-12		4-1/2	3-7/8	3-39/64	3	1/4-20
C20			4-1/2	3-7/8	3-39/64	3-3/8	1/4-20
20/C20		ZP-C-2520-26	4-1/2	3-7/8	5	4-1/2	1/4-20
			4-1/2	3-7/8	5	4-7/8	1/4-20
24	ZP-C-2524-12		8	7	3-33/64	2-19/64	1/2-13
C24			8	7	3-33/64	2-21/32	1/2-13
24		P-202708-24	8	7	5-3/4	4-9/16	1/2-13
C24			8	7	5-3/4	5	1/2-13
28	ZP-C-2528-12		8	7	3-5/8	2-7/16	1/2-13
C28			8	7	3-5/8	2-3/4	1/2-13
28		P-202708-28	8	7	5-3/4	4-9/16	1/2-13
C28			8	7	5-3/4	5	1/2-13

Conduit Fitting Bodies – Cadmium Plated Ferrous Alloy

Shell Size	Conduit Body Hub Size	Conduit Body Cat. No.	DIMENSIONS A1	A2	B	C1	C2	D	E	F
12 or 16	3/4	P-202760-42	5-1/4	5-1/4	25/64	4-5/8	4-5/8	4-3/16	2-3/8	9/32
	1	P-202760-43	5-1/4	5-1/4	25/64	4-5/8	4-5/8	4-3/16	2-3/8	9/32
	1-1/4	P-202760-64	5-1/4	5-1/4	25/64	4-5/8	4-5/8	4-3/16	2-3/8	9/32
	1-1/2	P-202760-65	5-1/4	5-1/4	25/64	4-5/8	4-5/8	4-3/16	2-3/8	9/32
20 or C20	1-1/4	JRZ-610064	6	6	9/16	5-1/4	5-1/4	4-1/2	3-3/4	9/32
	1-1/2	JRZ-610065	6	6	9/16	5-1/4	5-1/4	4-1/2	3-3/4	9/32
	2	JRZ-610066	6	6	9/16	5-1/4	5-1/4	4-1/2	3-3/4	9/32
24 or C24	2-1/2	JR-720036-A	SEE BOTTOM DRAWING						3-3/4	7/16
28 or C28	3	JRZ-820036-A	SEE BOTTOM DRAWING						4-1/2	7/16

Contact Crimping Tools

TP-201411-AG

TP-201411-AG HAND CRIMP TOOL COMPLETE
This tool is complete with 3 contact locators and instructions, and will crimp all contacts #10 through #18 of the Mod II and Mod III design.

TP-201411-TO Hand crimp tool only (less locators)

TP-201411-16-18 Locator only for #16 and #18 pins and sockets

TP-201411-10-12 Locator only for #10 pin and sockets and #12 sockets

TP-201411-12P Locator only for all #12 pins any length

TP-201328
Crimping Tool Only
and Accessories for Contacts
#12 through #4/0

TP-201351-AG HAND CRIMP TOOL
This tool is complete with carrying case, checking gage and complete instructions for crimping #10 through #18 contacts of MOD II or MOD III design.

TP-201351-TC HAND CRIMP TOOL
This tool crimps #18 - #20 contacts utilizing thermocouple wire.

TP-201351-TL HAND CRIMP TOOL
This tool crimps #8 contacts only.

Thomas & Betts TOOL NUMBER TBM15 AND DIE NUMBER 15505
To terminate 500 MCM contact.

Contact Size	Wire Size	Die Number	Check Gage	Color	(Locator) Mod II	(Locator) Mod III
12 W Length 12 C Length	12-14	TP-201328-12D	TP-201328-12G	Yellow	TP-201328-12 TP-201328-12C	TP-201328-12L
10 W Length 10 C Length	10-12	TP-201328-10D	TP-201328-10G	Black	TP-201328-10 TP-210328-10C	TP-210328-10L
8 W Length 8 C Length	8-10	TP-201328-8D	TP-201328-8G	Red	TP-201328-8 TP-201328-8C	TP-201328-8L
4 W Length 4 C Length	4-6	TP-201328-4D	TP-201328-4G	Brown	TP-201328-4 TP-201328-4C	TP-201328-4L
1/0	1/0-1 2	TP-201-328-0D TP-201328-2D	TP-201328-0G TP-201328-2G	Blue	TP-201328-0C	TP-201328-0L
4/0	4/0 - 3/0	TP-210328-41D	TP-201328-41G	Green	TP-201328-41	TP-201328-41L

TP-201328-F

* Foot control unit with
6 foot hose –
Catalog No. TP-201328-F
Normal operation 100 P.S.I.

TP-201328 CRIMP TOOL

TP-201328 PS-POWER SUPPLY

TP-201328 BC-CARRYING CASE

NOTE: Carrying case will accommodate crimp tool.

NOTE: Power supply will include 5 dies and locators.

Amphenol INDUSTRIAL

Insertion and Removal Tools for MOD II & MOD III

Tools for Crimp Type Contacts

Insertion Tools

Used for inserting contacts after they are terminated to conductor. Pin and socket contacts have identical terminal ends; the same tool is used for both.

Size	Insertion Tool Catalog No.		Replacement Tips
18	TP-201047-1	Use Same	TP-201047-PA
16	TP-201048-1	Tool for	TP-201048-PA
12	TP-201049-1	Pin or	TP-201049-PA
10	TP-201046-1	Socket	TP-201046-PA

Size	Expander Barrel Catalog No.	Tapered Lead Style	T-Bar Handle Style
8	TP-201007-A	TP-201007-B	–
4	TP-201033-A	TP-201033-B	–
0	TP-201000-EBL	TP-201000-TL	TP-201000-TH
0	TP-201000-EBS		

A separate expander barrel is required for each cavity of the contact inset.

An even number of long and short barrels should be used: Example: if the insert contains four cavities, use two long (EBL) and two short (EBS). Insert the short ones first and remove them last.
NOTE: EBS = Expander Barrel Short, EBL= Expander Barrel Long.

The T-Bar handle should be used in the insertion and extraction of the expander barrel for the 1/0 cavities – only one is required.

One tapered lead required only.

Removal Tools

Used for extracting contacts from the insert assembly after contacts have been seated.
Expanders and taper leads are required for sizes 8, 4, 1/0 MOD II contacts only.

Removal Tools for MOD II

Size	Removal Tool Number for Pin	Removal Tool Number for Socket
18	TP-201459	TP-201011-3
16	TP-201459	TP-201010-3
12	TP-201459	TP-201009-3
10	TP-201459	TP-201008-3

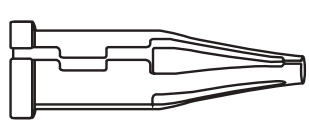

MOD III Pin and Socket Removal Tools

Contact Size	Removal Tool Number for Pin and Socket
18	TP-201315-18
16	TP-201315-16
12	TP-201315-12
10	TP-201315-10
8	TP-201315-08
4	TP-201315-04
1/0	TP-201260-00

Single Pole Power Connectors

RIG-Power® Connectors (1000v AC/DC)

Ampacity (Using 535 MCM)	Ampacity (Using 777 MCM)	Wire Range	Connector Style	Insert Gender	Part Number*
900	1135	444-777 kcmil	Plug w/ Mech. Clamp	Dead Front Pin (Line side)	RIG-10P▲-XX-M-◆
			Plug w/ Mech. Clamp	Socket Contact (Load Side)	RIG-10S▲-XX-M-◆
			Cable Receptacle w/ Mech. Clamp	Dead Front Pin (Line side)	RIG-15P▲-XX-M-◆
			Cable Receptacle w/ Mech. Clamp	Socket Contact (Load Side)	RIG-15S▲-XX-M-◆
			Fixed CableReceptacle w/ Mech. Clamp	Dead Front Pin (Line side)	RIG-17P▲-XX-M-◆
			Fixed Cable Receptacle w/ Mech. Clamp	Socket Contact (Load Side)	RIG-17S▲-XX-M-◆
			Panel Mount Receptacle (Bus Bar)	Dead Front Pin (Line side)	RIG-17PR-◆
			Panel Mount Receptacle (Bus Bar)	Socket Contact (Load Side)	RIG-17SR-◆
			Panel Mount Receptacle (Direct Cable Entry)	Dead Front Pin (Line side)	RIG-17PN-◆
			Panel Mount Receptacle (Direct Cable Entry)	Socket Contact (Load Side)	RIG-17SN-◆

* ▲ Select Cable Size: (4=444 kcmil, 5=535 MCM, 6 = 646 MCM, 7=777 MCM)
XX - Select Cable Diameter Code #. See Grommet Selection Guide below.
M designates Mechanical Clamp (For basketweave grip substitute K for M).
◆ Select standard color code from Color Code options below.
Use Crimp Tool: Anderson (Square D) Versa Crimp # VC8

For Radsok RIG-Power Connectors consult Amphenol Industrial for assistance in ordering.
Example part numbers with Radsok contacts are:
Plug: RIG-R10P▲-XX-M-◆
Receptacle: RIG-R17PR-◆

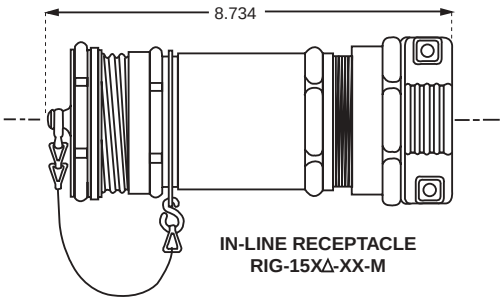

IN-LINE RECEPTACLE RIG-15X∆-XX-M

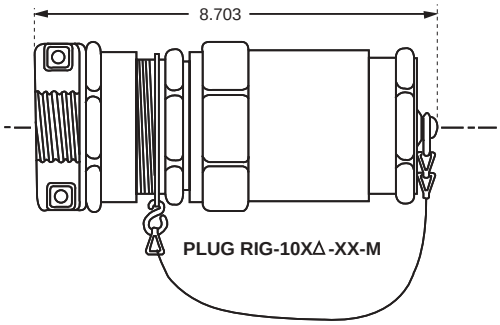

PLUG RIG-10X∆-XX-M

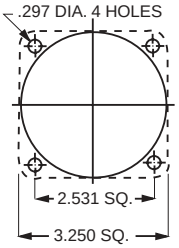

PANEL MOUNTING HOLES

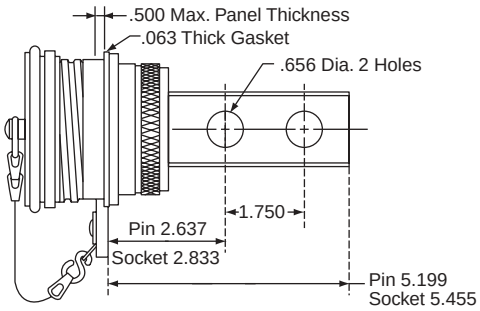

PANEL MOUNT RECEPTACLE RIG-17X

NOTE:
See page 20, shell size C24 for full mounting dimensions.

RIG-POWER Grommet Selection Guide

Cable Diameter	1.000-1.125	1.125-1.250	1.250-1.375	1.375-1.500	1.500-1.625	1.625-1.750	1.750-1.875
Code No.(XX)	18	20	22	24	26	28	30

◆ Color Code Options

Current Type	DC				AC			
Standard Color Code	Blue	Orange	Yellow	Brown	Red	White	Black	Green
Part Number Suffix ◆	-BL	-OR	-Y	-BR	-R	-W	-BK	-G

Amphenol INDUSTRIAL

Single Pole Power Connectors

P-500™ / PD-501 POWER Connectors

Ampacity	Wire Size	Type of Termination	Gender	Part Number	Boot Part # (See Color Code)	Cable Sealing Range
900*	–	Stud	Socket	P-500126-BS-◆	–	–
900*	535MCM	Solder	Pin	PD-501-L	TMPC-10-◆	1.125 - 1.500
900*	535MCM	Crimp	Pin	PD-500126-P	TMPC-10-◆	1.125 - 1.500
325	313MCM	Solder	Pin	PD-501-S	TMPC-10-◆	1.125 - 1.500

Note: Connectors are rated at 1000 Volts AC/DC when mounted on 5" centers.
Copper alloy, silver plated contacts for maximum conductivity.
Crimp tool required for P-500126-P is Thomas & Betts hex crimp using Tool # TBM15 & die catalog #15505 or Anderson (Square D) Versa Crimp VC8.
* When used with 125° C rated cable.

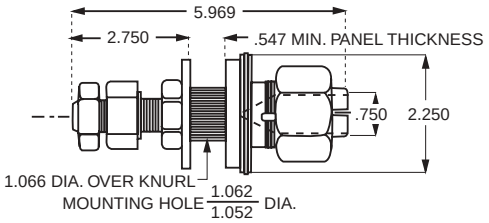

PANEL BOARD SOCKET
P-500126-BS

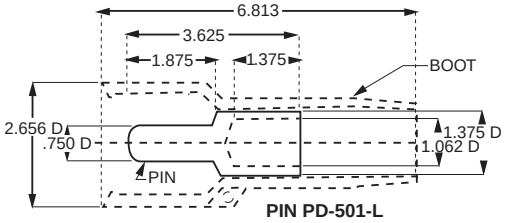

PIN PD-501-L

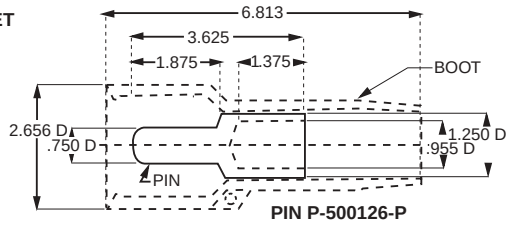

PIN P-500126-P

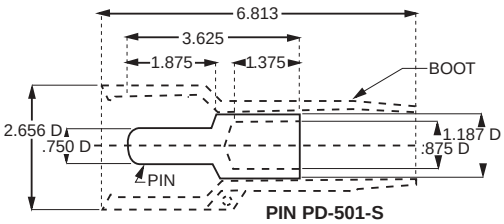

PIN PD-501-S

TMPC™ Connectors

Gender	Type of Termination	With Standard Contacts: Part Number	With Standard Contacts: Current Range	With Radsok Contacts: Part Number	With Radsok Contacts: Current Range	Wire Size	Boot Part No.	Cable Sealing Range
Socket	7/8" Stud/Panel Board	TMPC-41777-L-◆	900-1135 amps	TMPC-41777-RL-◆	1500	N/A	N/A	N/A
Socket	2 Hole Bus Bar	TMPC-41777-24L	900-1135 amps	TMPC-41777-R24L	1500	N/A	N/A	N/A
Pin	Crimp	TMPC-40535-L	900 amps	TMPC-40535-RL	1500	444-535 kcmil	TMPC-10-◆	1.125-1.500
Pin	Crimp	TMPC-40777-L	900-1135 amps	TMPC-40777-RL	1500	646-777 kcmil	TMPC-10-◆	1.125-1.500

Note: TMPC Connectors are rated at 1000 Volts AC/DC when mounted on 5" centers.
Material is copper alloy, silver plated for maximum conductivity and corrosion resistance.
Recommended crimping tools are as follows: Anderson (Square D) Versa Crimp VC8 (four indent).

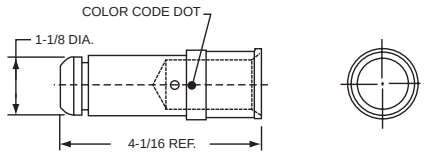

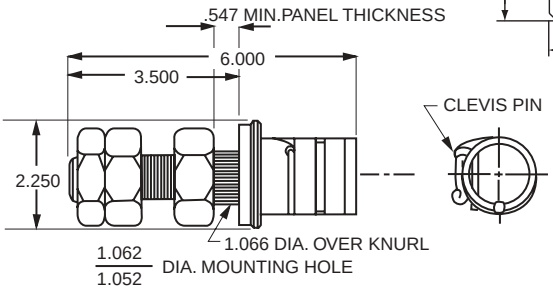

PANEL BOARD SOCKET
TMPC-41777-L

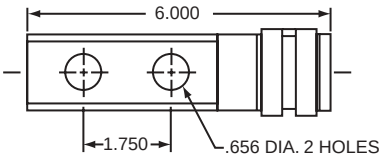

MOTOR BUS BAR MOUNT
SOCKET TMPC-41777-24L

STAR-LINE Connector Assembly and Termination Instructions

Proper assembly of multiple-contact connectors, for the most part requires common sense. The simplicity of these instructions is perhaps the reason why they are easily overlooked or taken for granted. These 27 reminders can help eliminate connector failures caused by improper assembly.

1. Read the assembly instructions carefully before actually starting to assemble connectors. Besides the matter of instruction on correct procedures, there are two important reasons for this preliminary step: To identify the various component parts, and to check for any missing parts.
2. Cut cable jackets and sheathing squarely and to correct length, using only wire strippers that have been approved for the operation. In preparing the individual wires in cables and harnesses for assembly, make allowances in length for reaching the outermost circle of contact cavities in the connector insert. This, of course, means that the conductors and the insulation should be cut progressively longer as they extend out from the center of the cable or harness to assure sufficient length for any necessary forming.
3. Follow specifications covering maximum cable stripping lengths for efficient cable grommet sealing. All wires should be cut squarely so that they will fit into contact wire wells correctly.
4. Before starting actual termination wires, it is essential that cables and harnesses be laid out in a specified order in accordance with the wiring diagram. Proper layout will reduce the need for twisting and crossover of conductors. If the wiring layout is not correct, the termination operation will be difficult or even impossible and the chances for making errors will be increased. Cable and harness assemblies having a spiral layout also must be matched carefully to the correct contacts in both the male and female inserts.
5. Some cables have a soft filler or braid on the conductors which, compresses when external pressure is applied. As a result, the cable diameter may be reduced to a point where the sealing range of the grommet is exceeded. In addition, the seal may take a permanent set and further reduce sealing efficiency. To avoid leakage at the seal under these conditions, it is suggested that, where construction of the cable permits, a metal ferrule be slipped under the cable jacket at the stressed position. This ferrule will serve as a compression supporting member and enable the gland seal to withstand high external pressures.
6. Use only correct size sealing grommets to assure resistance to moisture and other contaminants. Make certain that cable jacket is smooth where grommet is to seal. Remove any grooves or ridges if present by sanding or scarfing.
7. Use only the proper crimping tools that have been set or calibrated with precision gages.
8. When contacts are to be soldered, avoid direct contact of soldering tools to inserts. An open flame or hot soldering tip can carbonize insulating materials and make them useless.
9. Make certain that all contacts are the correct size before attempting to assemble them into insert cavities. This point is particularly important when both power and control types of contacts are used in the same connector.
10. Be sure that grounding contacts are correctly located.
11. Seat all contacts properly so that they will not be damaged or become disengaged during connector mating operations.
12. Use only the proper insertion tools and be sure that they are aligned axially when pushing contacts into their fully seated position.
13. When inserts have more cavities than conductors, plug unused cavities with either plain contacts or special seal plugs designed for the purpose. Some connectors require both a contact and seal plug in unused cavities to meet military specifications and to assure complete internal environmental sealing.
14. After all terminated contacts are inserted in their respective cavities and inspected, the cable adapter or insert clamp nut should be tightened with a wrench. This assembly operation should be done by placing the components in a vise with smooth-faced jaws and using a strap wrench.
15. If for any reason terminated conductors have to be removed from an insert because of any assembly error or change in circuitry, be sure to remove the cable clamp or insert clamp nut first before extracting the contact and reinserting it. This step is important because any attempt to remove the contacts when the resilient insulator components are compressed will result in damage.
16. When handling cables, use adequate support to prevent damage to the internal wires. Gland nuts and grommets are intended for sealing purposes and should not be used as a cable grip.
17. If one of the connector poles is a grounding wire, make sure that it is grounded properly before the connector is actually engaged.
18. When connectors having the same configuration are to be mounted close together, different or alternate keying arrangements should be used to prevent mismating or cross-mating and possible damage to the electrical system or human injury.
19. Always inspect all aspects of connector assembly operations before putting connectors into actual operation.
20. Crimping and terminating of conductors to contacts must be done carefully. Make certain that wire strands are fully bottomed in contact wells by checking through inspection hole provided.
21. Soldering conductors to contacts must be done carefully and a non-conductive flux should be used to avoid corrosion or hygroscopic action. Do not use solder salts or acids because they may affect the dielectric properties of insulation materials.
22. Be careful not to damage wire grommets or contact retaining collets when inserting or extracting contacts.
23. Never try to straighten bent contacts. Straightening cannot be done properly and the plating on contacts will very likely be marred. This will result in a high resistance connection and will expose the base metal to possible corrosion.
24. Do not attempt to remove inserts that are bonded or locked in place in their shells.
25. Be certain that all components of connectors are assembled. Each part performs a vital function and it would not be included if it wasn't useful.
26. Each assembler of connectors should be his own inspector. Assembly workmanship is a significant factor in determining the quality of multiple-contact connectors. Quality cannot be "inspected" into connectors; it must be "built-in" during each and every assembly operation.
27. When potting connectors be sure to apply potting only in mated condition to assure that contacts will align properly.

STAR-LINE Connectors with RADSOK® Contacts

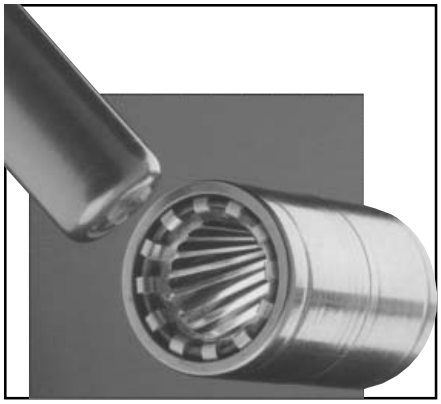

RADSOK Contact Design:

- Socket cylinder within female contact has several equally spaced longitudinal beams twisted into a hyperbolic shape.
- As male pin is inserted, axial members in the female half deflect, imparting high current flow across the connection with minimal voltage loss.
- The hyperbolic, stamped grid configuration ensures a large, coaxial, face-to-face surface area engagement.
- Ideal for crimp termination applications requiring repeated mating cycles and high current with a low milli-volt drop.

Certain designs are available for variable frequency drive (VFD) applications. Consult Amphenol Industrial Operations for further information.

The new RADSOK contact design has been incorporated into the Star-Line connector family of connectors.

Insert arrangements with RADSOK's are shown in this catalog. For information on availability of additional inserts with RADSOK's consult Amphenol Industrial Operations.

Amphe-Power connectors with RADSOK sockets can handle up to 150% higher amperages than connectors with standard contacts. Current Amphe-Power product lines support from 50A to 500A continuous duty. RADSOK contacts are available in size 8 (69 amps), size 4 (120 amps), and size 0 (250 amps).

RADSOK Contact Advantages:

- Low contact resistance - the RADSOK contact's multiplicity of flat grid surfaces assures the greatest possible contact area on the mating pin. This results in longer life - reduced contact pressure yields reduced wear.
- Low milli-volt drop performance - due to the intimate contact provided by the spring force of the grid, the flat contact surface and the wiping action during insertion.
- Higher current capacity with minimized temperature rise. Lower overall contact resistance reduces heat build-up, thereby allowing higher current capacities at given temperature limits. Connectors with RADSOK contacts may be produced in various sizes with a variety of amperage capabilities.
- Reliability under vibration and shock. System inertia is minimized by the small package and the fact that the contact is under a spring load.
- High quality, consistency and lower cost with high speed, automated precision stamping and assembly technology

See Brochure SL-391, Amphenol Amphe-Power Connectors with RADSOK Technology for more information on other Amphenol connector types that incorporate RADSOK contacts.

Additional Amphenol® Industrial Connector Products

Neptune® Series

Amphenol Industrial Operations has introduced a new power connector family that features the Amphenol exclusive RADSOK® contact system. This new Neptune® connector series is designed to perform in the most demanding environments. It features the same aluminum constructions with anodic hardcoat plated components as the Star-Line product.
The RADSOK contact provides increased amperage. See page 81 for more information on RADSOK contact features and benefits.
Other features: 30 Amp through 400 Amp/480 Volt inserts available; decreased weight and panel layout compared to competition; double lead Acme threads for easy coupling.
Used in oil exploration equipment, convention center power distribution, portable power distribution equipment, geophysical trucks, and communication shelters.

Reference Product Data Sheet #192

Amphenol Cord Grips

Amphenol's industrial product offering also includes a wide variety of cord grips that provide liquid tight strain relief for cord, cable and flexible conduit. They have threaded coupling for panel board or threaded hub applications. Straight, 45 degree or 90 degree styles. Moisture sealing is provided with oil-resistant grommets and compression nuts. Tapered conduit threads assure strong water and oil-tight joints. UL listed and CSA certified.

Reference Catalog 12-055

Amphenol Cable Glands

Amphenol Industrial Operations, the worldwide leader of explosion proof and hazardous environment interconnects, introduces a broad range of explosion proof and industrial cable glands. The cable gland products are designed to perform in the most demanding environments. Amphenol provides a complete line of EX Zone 1 and 2 rated cable glands along with general duty cable glands that are suitable for armored and unarmored cable. Brass and stainless steel types are available. IP66/68; deluge; NEMA rated products. SIRA/ATEX certified to Exd/Exe (Class I, Div. I) and CSA approved.

Reference Catalog 12-055

Overmolded Cable Assemblies

Cables can be designed with a custom overmold to any Amphenol cylindrical connector for almost any industrial application. Overmold seals to the rear of the connector and to the cable jacket providing moisture sealing. A variety of materials are available: Neoprene, Hypalon and others. Lengths and configurations are designed to meet customer specifications.

Consult Amphenol Industrial Operations, Sidney, NY

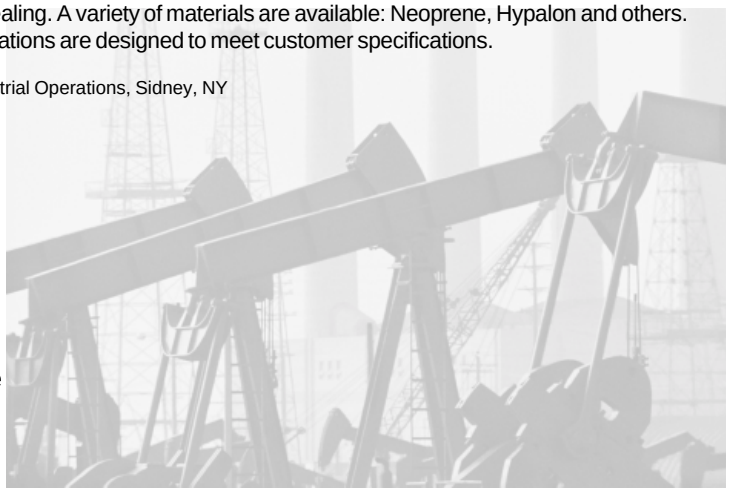

Amphenol's combination of cable glands and cord grip products, along with their design and manufacturing expertise in cable assemblies makes Amphenol Industrial the one-stop supplier for connector and cable sealing solutions.

Additional Amphenol® Industrial Connector Products

MIL-5015

Amphenol has long been the accepted leader in providing MS/Standard MIL-5015 type connectors. The Amphenol MS/Standard product is a large family of time-tested medium to heavyweight connectors with resilient inserts, threaded coupling. Other features include: over 200 insert arrangements, both crimp and solder terminations, plating options including cadmium-free.
There are five classes to meet different requirements: A- solid shell, for general, non-environmental applications; C- pressurized, for use on pressurized bulkheads or pressure barriers; E/F - environmental resisting with strain reliefs, designed for applications where the connector with be exposed to moisture, vibration and rapid changes in pressure and temperature; R- lightweight environmental resisting, shorter in weight than the E/F classes.
Used in heavy equipment, off-road vehicles, mass transportation and power generation.

Reference Catalog 12-020

GT-Series

Amphenol GT Series of connectors are heavy duty, rugged and environmentally resistant. They have reverse bayonet coupling which provides quick mating, audible, visual and tactile full mating indicators. They incorporate 5015 inserts, available in Neoprene, Viton or low smoke/flame retardant material. Over 40 varieties of shell styles and backend accessory combinations. Rugged construction - aluminum or stainless steel components.
Other features and benefits include: UL recognized; rated to 2000 couplings min., available in both crimp and solder terminations. Numerous military and commercial finishes available including cadmium free zinc alloy.
Used in mass transportation, power generation, petrochemical applications, heavy equipment and geophysical applications.

Reference Catalog 12-024

MIL-C-26482

A medium size cylindrical connector family with a wide variety of styles. MS versions are produced in strict accordance to MIL-C-26482, Series 1 with several non-MS types also offered. MS-PT Service classes E, F and F types are UL recognized.
Styles include three point bayonet coupling, crimp, solder or printed board termination. Resilient inserts provide high dielectric strength and moisture barrier. There are 7 shell styles including hermetics, and 57 insert patterns. Variety of finishes, contact options and backend accessories options.
Used in instrumentation, machine tool, communications and geophysical applications.

Reference Catalog 12-070

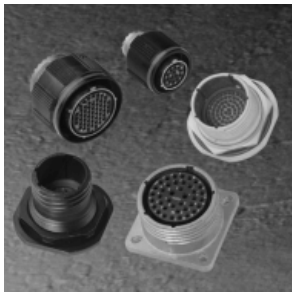

Amphe-Lite Series

Amphenol offers a commercial 38999, Series III type connector for higher performance industrial usage. This family offers 38999 type high performance capabilities for severe environment applications, yet is cost effective enough for general duty and non-environmental use as well. There is a class which provides an excellent EMI shielding and a class that provides a non-conductive finish. Composite shells resist severe corrosion.
The Amphe-lite series has 3 shell styles and 59 insert patterns available. It offers wide versatility in contact options such as twinax, coax, filter contacts and fiber optic termini, which makes it ideal for usage in communications equipment, medical equipment and automotive applications.

Reference Catalog 12-094

For an overview of Amphenol Industrial Connector Products ask for Amphenol brochure SL-381. Call your local Amphenol sales office or 800-678-0141 for further information. The Industrial Overview brochure and all the product brochures listed above can be viewed, printed and downloaded from the Amphenol website: **www.amphenol-industrial.com**.

Общество с ограниченной ответственностью «МосЧип» ИНН 7719860671 / КПП 771901001
Адрес: 105318, г.Москва, ул.Щербаковская д.3, офис 1107

Данный компонент на территории Российской Федерации

Вы можете приобрести в компании MosChip.

Для оперативного оформления запроса Вам необходимо перейти по данной ссылке:

http://moschip.ru/get-element

Вы можете разместить у нас заказ для любого Вашего проекта, будь то серийное производство или разработка единичного прибора.

В нашем ассортименте представлены ведущие мировые производители активных и пассивных электронных компонентов.

Нашей специализацией является поставка электронной компонентной базы двойного назначения, продукции таких производителей как XILINX, Intel (ex.ALTERA), Vicor, Microchip, Texas Instruments, Analog Devices, Mini-Circuits, Amphenol, Glenair.

Сотрудничество с глобальными дистрибьюторами электронных компонентов, предоставляет возможность заказывать и получать с международных складов практически любой перечень компонентов в оптимальные для Вас сроки.

На всех этапах разработки и производства наши партнеры могут получить квалифицированную поддержку опытных инженеров.

Система менеджмента качества компании отвечает требованиям в соответствии с ГОСТ Р ИСО 9001, ГОСТ РВ 0015-002 и ЭС РД 009

Офис по работе с юридическими лицами:

105318, г.Москва, ул.Щербаковская д.3, офис 1107, 1118, ДЦ «Щербаковский»

Телефон: +7 495 668-12-70 (многоканальный)

Факс: +7 495 668-12-70 (доб.304)

E-mail: info@moschip.ru

Skype отдела продаж:
moschip.ru
moschip.ru_4
moschip.ru_6
moschip.ru_9