CS-series Process Analog I/O Units

CS1W-PTS/PDC/PTW/PTR/PPS/PMV

CSM_CS1W-PROCESS_DS_E_1_1

Provides the functionality of isolators, power supplies, signal converters, and other devices.

CS1W-PDC55 CS1W-PTS55 CS1W-PTS56

- The Analog Input Unit converts analog input signals such as 1 to 5 V or 4 to 20 mA into digital values, and takes the values scaled in industrial units, and transfers it to the CPU Unit as the process value. Because of this, no ladder program is required at the CPU Unit for scaling.
- The Analog Output Unit converts analog output set values from the CPU Unit to analog output signals such as 4 to 20 mA or 1 to 5 V, and outputs them.
- The built-in functions, such as measurement value alarms, rate-of-change calculations, and square roots, have enabled major savings in cost and space compared with previous systems.
- High-resolution Models and 8-point Input Models are also available. By combining the Units, logging/monitoring systems can be constructed, or the Units can be used together with LCBs/LCUs to construct complete process control systems.
- Parameters can be easily displayed and set in an easy-to-understand form without special tools.

Features

Process Analog Input:
- Up to eight analog inputs can be connected for each Unit.
- There is isolation between input channels, so unwanted circuit paths between thermocouple inputs can be prevented. (Except for CS1W-PTR01/02)
- Output scaling (±32,000)
- Process value alarms (HH, H, L, LL)
- Input disconnection alarm
- Rate-of-change calculation and alarm
- Top/bottom/valley hold (CS1W-PTS11/PTS12/PDC11 only)

Process Analog Output:
- Up to four analog set values can be output for each Unit.
- All outputs are isolated.
- Output rate-of-change limit
- Output high/low limits
- Output scaling (±32,000)
- Control output answer input (CS1W-PMV01 only)

Isolated-type Pulse Input:
- Provides up to four pulses from a device such as a displacement flowmeter. The accumulated value can also be calculated at the same time and transferred to the CPU Unit at each cycle. (CS1W-PPS01)

System Configuration

These Process Analog I/O Units belong to the CS-series Special I/O Unit group.

- They can be mounted to CS-series CPU Racks or Expansion I/O Racks.
- They cannot be mounted to C200H CPU Racks, Expansion I/O Racks, or SYSMAC BUS Remote I/O Slave Racks.

The number of Units that can be mounted to one Rack (either a CPU Rack or Expansion I/O Rack) depends upon the maximum current supplied by the Power Supply Unit and the current consumption by the other Units.

There are no restrictions on Rack position.

Note: I/O addresses for Special I/O Units are allocated according to the unit number set on the switches on the front panel, and not according to the slot position in which they are mounted.

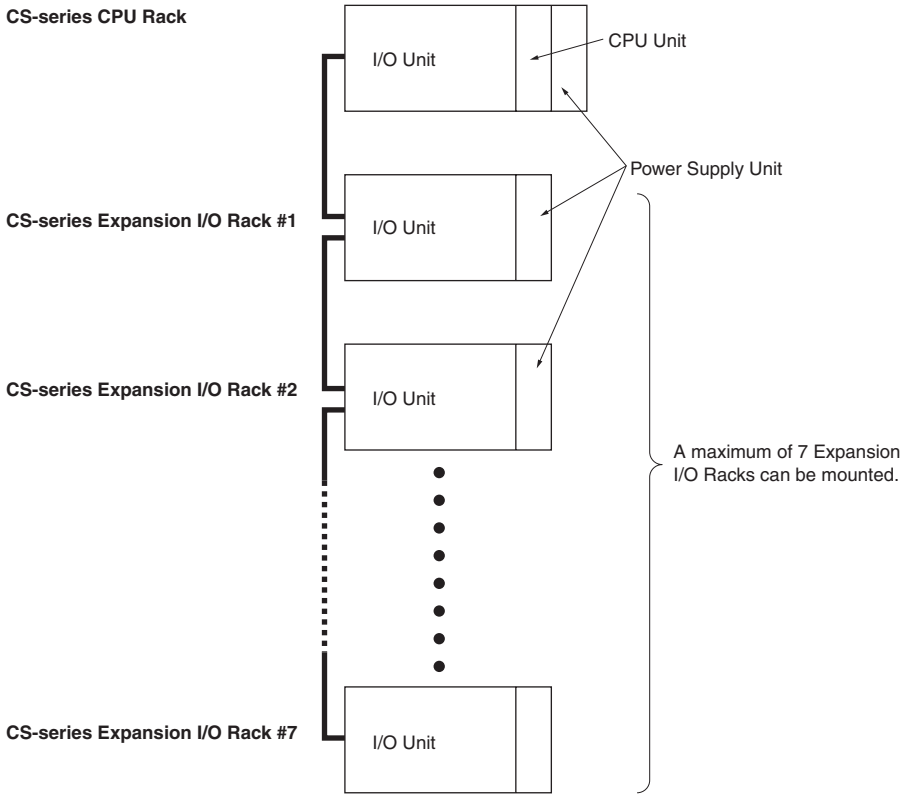

Ordering Information

Process Analog I/O Units

Isolated-type Thermocouple Input Units

Unit type	Product name	Input points	Signal range selection	I/O type	Conversion speed	External connection	No. of unit numbers allocated	Current consumption (A) 5V	Current consumption (A) 24V	Model	Standards
CS1 Special I/O Units	Isolated-type Thermocouple Input Units	4 inputs	Set separately for each input	B, E, J, K, L, N, R, S, T, U, WRe5-26, PLII, ±100 mV	20 ms/4 inputs, 10 ms/2 inputs	Removable terminal block	1	0.12	0.08	**CS1W-PTS11**	UC1, N, CE
		4 inputs		R, S, K, J, T, L, B	250 ms/4 inputs			0.25	–	**CS1W-PTS51**	UC1,CE
		8 inputs		R, S, K, J, T, L, B	250 ms/8 inputs			0.18	0.06	**CS1W-PTS55**	
		4 inputs		B, E, J, K, N, R, S, T, ±80mV	150 ms/4 inputs			0.15	0.15	**CS1W-PTS01-V1**	

Isolated-type Resistance Thermometer Input Units

Unit type	Product name	Input points	Signal range selection	I/O type	Conversion speed (resolution)	External connection	No. of unit numbers allocated	Current consumption (A) 5V	Current consumption (A) 26V	Model	Standards
CS1 Special I/O Units	Isolated-type Resistance Thermometer Input Units	4 inputs	Set separately for each input	Pt100, JPt100, Pt50, Ni508.4	20 ms/4 inputs, 10 ms/2 inputs	Removable terminal block	1	0.12	0.07	**CS1W-PTS12**	UC1, N, CE
		4 inputs		Pt100, JPt100	250 ms/4 inputs			0.25	–	**CS1W-PTS52**	UC1, CE
		8 inputs		Pt100, JPt100	250 ms/8 inputs			0.18	0.06	**CS1W-PTS56**	
		4 inputs		Pt100, JPt100	100 ms/4 inputs			0.15	0.15	**CS1W-PTS02**	
	Isolated-type Resistance Thermometer Input Units (Ni508.4 Ω)	4 inputs		Ni508.4	100 ms/4 inputs			0.15	0.15	**CS1W-PTS03**	

Isolated-type DC Input Units

Unit type	Product name	Input points	Signal range	Conversion speed (resolution)	External connection	No. of unit numbers allocated	Current consumption (A) 5V	Current consumption (A) 26V	Model	Standards
CS1 Special I/O Units	Isolated-type DC Input Unit	4 inputs	4 to 20 mA, 0 to 20 mA, 0 to 10 V, ±10 V, 0 to 5 V, ±5 V, 1 to 5 V, 0 to 1.25 V, ±1.25 V	20 ms/4 inputs, 10 ms/2 inputs	Removable terminal block	1	0.12	0.12	**CS1W-PDC11**	UC1, N, CE
		8 inputs	4 to 20 mA, 0 to 10 V, 0 to 5 V, 1 to 5 V	250 ms/8 inputs			0.18	0.06	**CS1W-PDC55**	UC1, CE
		4 inputs	4 to 20 mA, 0 to 20 mA, 1 to 5 V, 0 to 5 V, ±5 V, 0 to 10 V, ±10 V	100 ms/4 inputs			0.15	0.16	**CS1W-PDC01**	
	Isolated-type 2-Wire Transmitter Input Unit	4 inputs	4 to 20 mA, 1 to 5 V	100 ms/4 inputs			0.15	0.16	**CS1W-PTW01**	
	Power Transducer Input Unit	8 inputs	0 to 1 mA, ±1 mA	200 ms/8 inputs			0.15	0.08	**CS1W-PTR01**	
	Analog Input Unit (100 mV)	8 inputs	0 to 100 mV, ±100 mV	200 ms/8 inputs			0.15	0.08	**CS1W-PTR02**	

Isolated-type Analog Output Unit

Unit type	Product name	Output points	Signal range selection	Signal range	Conversion speed (resolution)	External connection	No. of unit numbers allocated	Current consumption (A)		Model	Standards
								5V	26V		
CS1 Special I/O Units	Isolated-type Analog Output Unit	4 inputs	Set separately for each input	4 to 20 mA, 1 to 5 V	100 ms/4 inputs	Removable terminal block	1	0.15	0.16	**CS1W-PMV01**	UC1, CE
		4 inputs		0 to 10 V, ±10 V, 0 to 5 V, ±5 V, 0 to 1 V, ±1 V	40 ms/4 inputs			0.12	0.12	**CS1W-PMV02**	

Isolated-type Pulse Input Unit

Unit type	Product name	Input points	External connection	No. of unit numbers allocated	Current consumption (A)		Model	Standards
					5V	26V		
CS1 Special I/O Units	Isolated-type Pulse Input Unit	4 pulse inputs	Removable terminal block	1	0.20	0.16	**CS1W-PPS01**	UC1, CE

International Standards

- The standards indicated in the "Standards" column are those current for UL, CSA, cULus, cUL, NK, and Lloyd standards and EC Directives as of the end of September 2008. The standards are abbreviated as follows: U: UL, U1: UL (Class I Division 2 Products for Hazardous Locations), C: CSA, UC: cULus, UC1: cULus (Class I Division 2 Products for Hazardous Locations), CU: cUL, N: NK, L: Lloyd, and CE: EC Directives.
- Ask your OMRON representative for the conditions under which the standards were met.

General Specifications

The specifications shown in the following table apply to all the CS-series Process Analog I/O Units. For specifications specific to each Unit, refer to the explanations of the individual units.

Item	Specification
Applicable PLC	CS-series PLCs
Unit type	CS-series Special I/O Unit
Structure	Backplane-mounted, single slot size
Dimensions	35 × 130 × 126 mm (W × H × D)
Weight	450 g max.
External connection terminals	• CS1W-PTS55/-PTS56/-PDC55 24-point removable terminal block (with lever) (M3 screws, Tightening torque: 0.5 N·m) • Other Units 21-point removable terminal block (M3 screws, Tightening torque: 0.5 N·m)
Unit number switch setting	00 to 95
Self-diagnosis function	Results of self-diagnosis shown on indicators.
Mountable Racks	CPU Rack or CS-series Expansion Rack
Maximum number of Units	80 Units (10 Units × 8 Racks) Confirm that the total current consumption of all the Units (including the CPU Unit) mounted to a single CPU Rack or Expansion Rack does not exceed the maximum power supply capacity of the Power Supply Unit.
Ambient operating temperature	0 to 55°C
Ambient operating humidity	10% to 90% (with no condensation)

Current consumption

Name	Model	Current consumption (power)	
		5 V	26 V
Isolated-type Thermocouple Input Unit	CS1W-PTS01-V1	0.15 A (0.75 W)	0.15 A (3.9 W)
	CS1W-PTS11	0.16 A (0.60 W)	0.08 A (2.08 W)
	CS1W-PTS51	0.25 A (1.25 W)	Not used.
	CS1W-PTS55	0.18 A (0.90 W)	0.06 A (1.56 W)
Isolated-type Resistance Thermometer Input Unit (Pt100, JPt100)	CS1W-PTS02	0.15 A (0.75 W)	0.15 A (3.9 W)
Isolated-type Resistance Thermometer Input Unit (Ni508.4)	CS1W-PTS03	0.15 A (0.75 W)	0.15 A (3.9 W)
Isolated-type Resistance Thermometer Input Unit (Pt100, JPt100, Pt50, Ni508.4)	CS1W-PTS12	0.12 A (0.60 W)	0.07 A (1.82 W)
Isolated-type Resistance Thermometer Input Unit (Pt100, JPt100)	CS1W-PTS52	0.25 A (1.25 W)	Not used.
	CS1W-PTS56	0.18 A (0.90 W)	0.06 A (1.56 W)
Isolated-type 2-Wire Transmitter Input Unit	CS1W-PTW01	0.15 A (0.75 W)	0.16 A (4.2 W)
Isolated-type Direct Current Input Unit	CS1W-PDC01	0.15 A (0.75 W)	0.16 A (4.2 W)
	CS1W-PDC11	0.12 A (0.60 W)	0.12 A (3.12 W)
	CS1W-PDC55	0.18 A (0.90 W)	0.06 A (1.56 W)
Power Transducer Input Unit	CS1W-PTR01	0.15 A (0.75 W)	0.08 A (2.1 W)
Analog Input Unit (100 mV)	CS1W-PTR02	0.15 A (0.75 W)	0.08 A (2.1 W)
Isolated-type Pulse Input Unit	CS1W-PPS01	0.20 A (1.00 W)	0.16 A (4.2 W)
Isolated-type Analog Output Unit	CS1W-PMV01	0.15 A (0.75 W)	0.16 A (4.2 W)
	CS1W-PMV02	0.12 A (0.60 W)	0.12 A (3.2 W)

(Reference) Maximum current and total power supplied

Power Supply Unit	Maximum current supplied (power)			Maximum total power
	5 V	26 V	24 V	
C200HW-PA204	4.6 A (23 W)	0.6 A (15.6 W)	None	30 W
C200HW-PA204C	4.6 A (23 W)	0.6 A (15.6 W)	None	30 W
C200HW-PA204S	4.6 A (23 W)	0.6 A (15.6 W)	0.8 A (19.2 W)	30 W
C200HW-PA204R	4.6 A (23 W)	0.6 A (15.6 W)	None	30 W
C200HW-PD024	4.6 A (23 W)	0.6 A (15.6 W)	None	30 W
C200HW-PA209R	9 A (45 W)	1.3 A (33.8 W)	None	45 W
C200HW-PD025	5.3 A	1.3 A	None	40 W
CS1D-PA207R	7 A (35 W)	1.3 A (33.8 W)	None	35 W
CS1D-PD024	4.3 A (21.5 W)	0.56 A (14.6 W)	None	28 W
CS1D-PD025	5.3 A	1.3 A	None	40 W

CS1W-PTS01-V1 Isolated-type Thermocouple Input Unit

Overview

The CS1W-PTS01-V1 Isolated-type Thermocouple Input Unit provides four direct thermocouple inputs, and sends the data to the CPU Unit each cycle. All inputs are isolated.

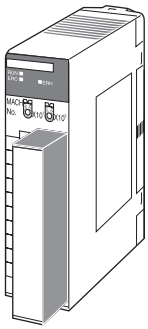

System Configuration

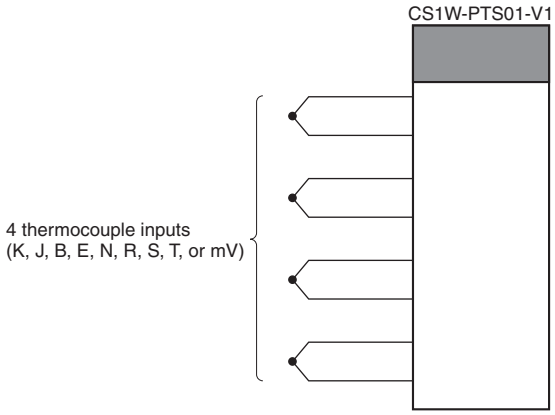

Specifications

Item		Specifications	
Model number		CS1W-PTS01-V1	
Applicable PLC		CS Series	
Unit type		CS-series Special I/O Unit	
Mounting position		CS-series CPU Rack or CS-series Expansion Rack (Cannot be mounted to C200H Expansion I/O Rack or SYSMAC BUS Remote I/O Slave Rack.)	
Maximum number of Units		80 (within the allowable current consumption and power consumption range)	
Unit numbers		00 to 95 (Cannot duplicate Special I/O Unit numbers.)	
Areas for data exchange with CPU Unit	**Special I/O Unit Area**	10 words/Unit Thermocouple Input Unit to CPU Unit: All process values, process value alarms (LL, L, H, HH), rate-of-change values, rate-of-change alarms (L, H), disconnection alarms, cold junction sensor errors	
	DM Area words allocated to Special I/O Units	100 words/Unit CPU Unit to Thermocouple Input Unit: Temperature sensor type, input range (user set), scaling of process value data to be stored in allocated words in CIO area, number of items for moving average, process value alarm setting (LL, L, H, HH), rate-of-change alarm setting (L, H), zero/span adjustment value, etc.	
Number of temperature sensor inputs		4	
Temperature sensor types		Thermocouple B, E, J, K, N, R, S, T or −80 to 80 mV. (Set separately for each of four inputs.)	Sensor type, input range, and scaling to industrial units are separate for each of the 4 inputs. **Note:** Sensor type, input range, and scaling to industrial units are set in the DM Area.
Input ranges		The input range can be set within any of the measurable input ranges shown in Table 1 (below). **Note:** Internally, inputs are processed in five ranges (refer to Table 2 below), so accuracy and resolution accord with these internal ranges.	Example: Thermocouple: K; input range: 0 to 500°C; industrial unit scaling: 0 to 500°C. DM Area settings are as follows: Thermocouple: 3 (0003 hex) Input signal maximum: 5000 (1388 hex) Input signal minimum: 0 (0000 hex) Industrial unit maximum value stored: 500 (01F4 hex) Industrial unit minimum value stored: 0 (0000 hex)
Scaling in industrial units		Data to be stored in the allocated words in the CIO area must be scaled (with the minimum and maximum values set). Data can be stored at 0% to 100%.	
Data storage in the CIO Area		The value derived from carrying out the following processing in order of the actual process data in the input range is stored in four digits hexadecimal (binary values) in the allocated words in the CIO Area. 1) Mean value processing → 2) Scaling → 3) Zero/span adjustment → 4) Output limits	

Item		Specifications
Accuracy (25°C)		±0.1% (of internal range full span) As shown in the following equation, the accuracy depends on the ratio of the selected internal range (0 to 4) span to the set input range span. $\text{Accuracy} = \pm 0.1\% \times \frac{\text{Internal range span (electromotive force conversion)}}{\text{Set input range span (electromotive force conversion)}}$
Temperature coefficient		±0.015% /°C, for any of internal range numbers 0 to 4.
Resolution		1/4,096 (of internal range full span) As shown in the following equation, the resolution depends on the ratio of the selected internal range (0 to 4) span to the set input range span. $\text{Resolution} = \frac{1}{4096} \times \frac{\text{Internal range span (electromotive force conversion)}}{\text{Set input range span (electromotive force conversion)}}$
Cold junction compensation error		±1°C, at 20 ±10°C
Warmup time		45 min
Maximum signal input		−80 to 80 mV
Input impedance		20 kΩ min.
Input disconnection detection current		0.1 μA (typical)
Response time		1 s (travel time from input 0% to 90%, for step input)
Conversion period		150 ms/4 inputs
Maximum time to store data in CPU Unit		Conversion period + one CPU Unit cycle
Disconnection detection		Detects disconnections at each input and turns ON the Disconnection Detection Flag. Hardware detection time: Approx. 5 s The process value overrange direction for when a disconnection occurs can be specified. (High: 115% of set input range; low: −15% of set input range)
Function	**Mean value processing (input filter)**	Calculates the moving average for the specified number of process values (1 to 16), and stores that value in the CIO Area as the process value.
	Process value alarm	Process value 4-point alarm (HH, H, LL, L), alarm hysteresis, and ON-delay timer (0 to 60 s) are available.
	Rate-of-change calculation	Calculates the amount of change per comparison time interval (1 to 16 s).
	Rate-of-change alarm	Rate-of-change 2-point alarm (H, L), alarm hysteresis (shared with process value alarm), and ON-delay timer (0 to 60 s, shared with process value alarm) are available.
Isolation		Between temperature inputs and between input terminals and PLC signals: Isolation by transformer
Insulation resistance		20 MΩ (at 500 V DC) between inputs
Dielectric strength		Between inputs: 1,000 V AC, at 50/60 Hz, for 1 min, leakage current 10 mA max.
External connections		Terminal block (detachable)
Unit number settings		Set by rotary switches on front panel, from 0 to 95.
Indicators		Three LED indicators on front panel (for normal operation, errors detected at the Thermocouple Input Unit, and errors related to the CPU Unit).
Front panel connector		Sensor input connector terminal block (detachable)
Effect on CPU Unit cycle time		0.3 ms
Current consumption		5 V DC at 150 mA max., 26 V DC at 150 mA max.
Dimensions		35 × 130 × 126 mm (W × H × D) **Note:** The height including the Backplane is 145 mm.
Weight		450 g max.
Standard accessories		Two cold junction sensors (installed in terminal block)

Sensor Types and Input Ranges

The temperature sensor (thermocouple) type and input range are set in the allocated words in the DM Area for every four inputs. The input range can be set anywhere within the measurable input ranges shown in Table 1.

Table 1: Measurable Input Ranges

Sensor type	DM Area setting	Measurable input range (See note.)
B	0	0 to 1,820°C
E	1	–270 to 1,000°C
J	2	–210 to 1,200°C
K	3	–270 to 1,372°C
N	4	–270 to 1,300°C
R	5	–50 to 1,768°C
S	6	–50 to 1,768°C
T	7	–270 to 400°C
mV	8	–80 to 80 mV

Note: Set the input range in the DM Area within this range.

Inputs are processed internally in five progressive ranges (numbers 0 to 4), as shown in the following table.

Table 2: Internal Ranges

Internal range number	Thermocouple electromotive force	Internal range span
0	–80 to 80 mV	160 mV
1	–40 to 40 mV	80 mV
2	–20 to 20 mV	40 mV
3	–10 to 10 mV	20 mV
4	–5 to 5 mV	10 mV

Therefore, the accuracy and resolution are determined by the ratio of the selected internal range (0 to 4) span to the set input range span (electromotive force converted value). For the internal range, a larger number is selected when both the minimum and maximum values of the range fall within that next range.
For example, suppose that the thermocouple type is K and the set input range is 0 to 800°C. The electromotive force for K 0 to 800°C is 0 to 33.277 mV. Since both the minimum and maximum values fall within the limits for internal range No. 1 (–40 to 40 mV), that range will be selected.
The following table shows the set input ranges corresponding to the internal range numbers 0 to 4.

Table 3: Set Input Ranges Corresponding to Internal Ranges

Sensor type	Measurable Input range	Internal range No. 0	Internal range No. 1	Internal range No. 2	Internal range No. 3	Internal range No. 4
		–80 to 80 mV	–40 to 40 mV	–20 to 20 mV	–10 to 10 mV	–5 to 5 mV
B	0 to 1,820°C	Not used.	Not used.	0 to 1,820°C	0 to 1,496°C	0 to 1,030°C
E	–270 to 1,000°C	–270 to 1,000°C	–270 to 537°C	–270 to 286°C	–270 to 153°C	–94 to 80°C
J	–210 to 1,200°C	–210 to 1,200°C	–210 to 713°C	–210 to 366°C	–210 to 186°C	–100 to 95°C
K	–270 to 1,372°C	–270 to 1,372°C	–270 to 967°C	–270 to 484°C	–270 to 246°C	–153 to 121°C
N	–270 to 1,300°C	–270 to 1,300°C	–270 to 1,097°C	–270 to 584°C	–270 to 318°C	–270 to 171°C
R	–50 to 1,768°C	Not used.	–50 to 1,769°C	–50 to 1,684°C	–50 to 961°C	–50 to 548°C
S	–50 to 1,768°C	Not used.	Not used.	–50 to 1,769°C	–50 to 1,035°C	–50 to 576°C
T	–270 to 400°C	Not used.	–270 to 400°C	–270 to 385°C	–270 to 213°C	–166 to 115°C
mV	–80 to 80 mV	–80 to 80 mV	–40 to 40 mV	–20 to 20 mV	–10 to 10 mV	–5 to 5 mV

Note: With Thermocouple Input Units, process values can be scaled in industrial units for the set input range. It is possible to set the process value scaling higher than the resolution, but it will cause the values to be unstable.

Terminal Connection Diagram

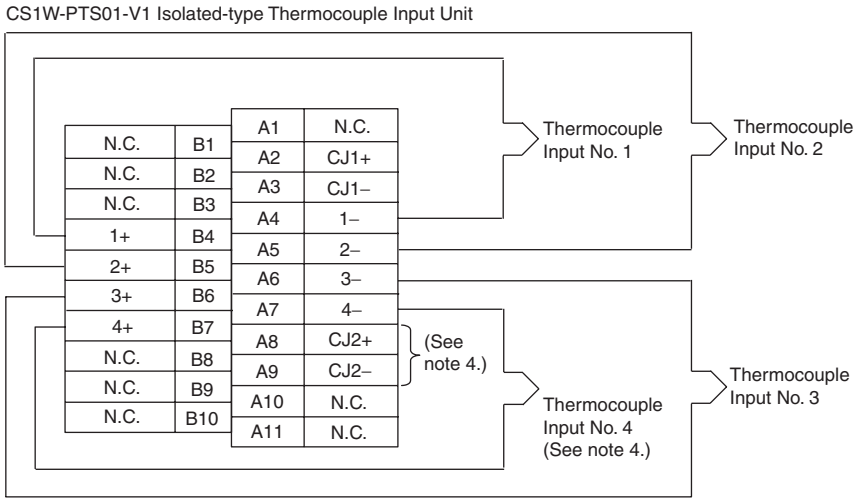

Note: 1. Cold junction sensors are installed between A2 and A3, and between A8 and A9 when the product is shipped. Do not remove them when using the Unit. If they are removed, temperatures cannot be measured correctly because there will be no compensation.

2. Use the same cold junction sensors that come with the Unit, and leave them just as they are. They are provided specifically for this Unit and its circuitry, and temperatures cannot be measured correctly if they are switched around or if another Unit's sensors are used in their place.

3. For unused input terminals, short-circuit the positive and negative sides (e.g., terminals A4 and B4 for input No. 1) of the thermocouple inputs with the lead wire.

4. When connecting input No. 4, remove the cold junction sensor between CJ2+ and CJ2–, and then reconnect it after the input is connected. Attempting to connect the input without removing the cold junction sensor may result in damage to the sensor.

Terminal Block Diagram

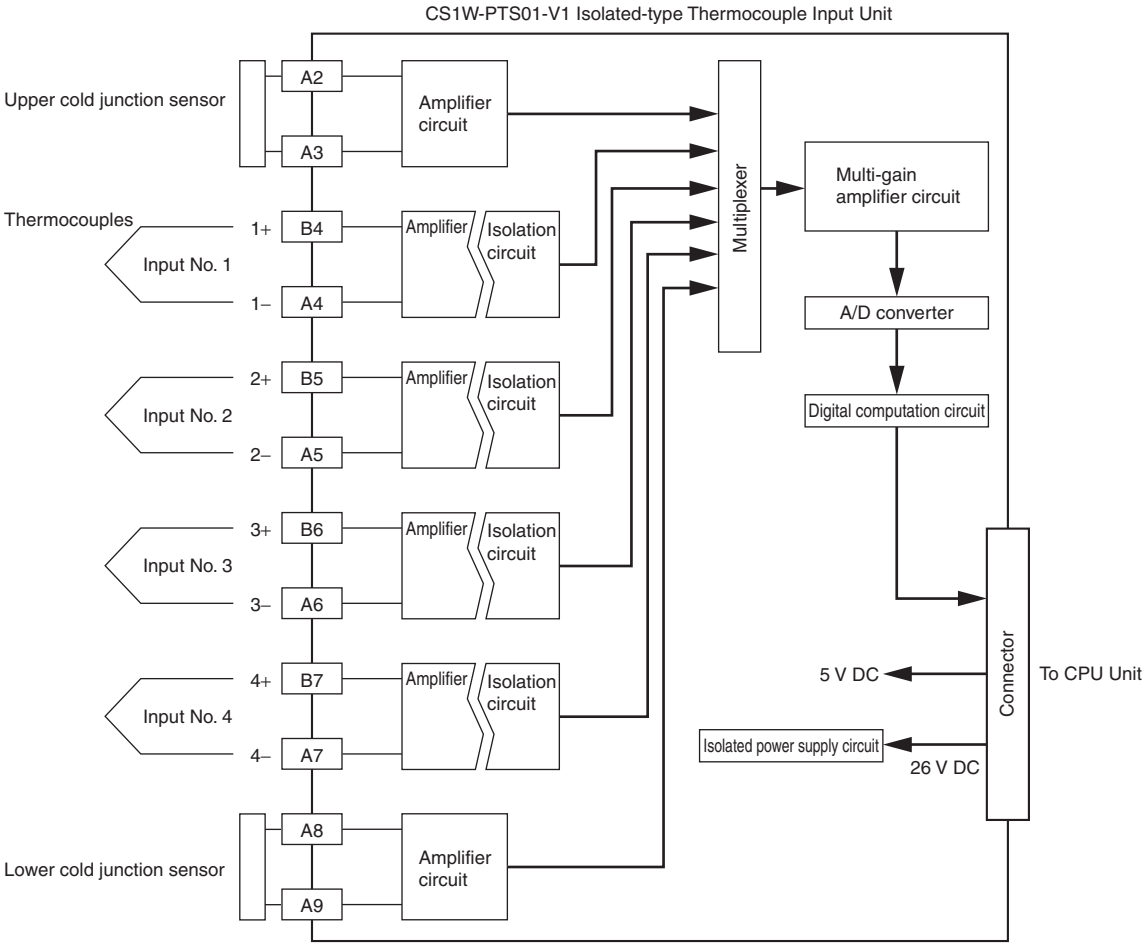

CS1W-PTS11 Isolated-type Thermocouple Input Unit

Overview

The CS1W-PTS11 Isolated-type Thermocouple Input Unit provides four direct thermocouple inputs, and sends the data to the CPU Unit each cycle. All inputs are isolated.

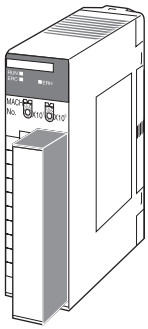

System Configuration

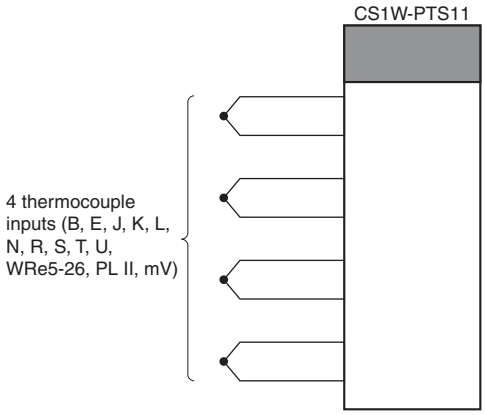

Specifications

Item		Specifications
Model		CS1W-PTS11
Applicable PLC		CS Series
Unit type		CS-series Special I/O Unit
Mounting position		CS-series CPU Rack or CS-series Expansion Rack (Cannot be mounted to C200H Expansion I/O Rack or SYSMAC BUS Remote I/O Slave Rack.)
Maximum number of Units		80 (within the allowable current consumption and power consumption range)
Unit numbers		00 to 95 (Cannot duplicate Special I/O Unit numbers.)
Areas for data exchange with CPU Unit	**Special I/O Unit Area**	10 words/Unit Thermocouple Input Unit to CPU Unit: All process values, process value alarms (LL, L, H, HH), rate-of-change values, rate-of-change alarms (L, H), disconnection alarms, cold junction sensor errors
	DM Area words allocated to Special I/O Units	100 words/Unit CPU Unit to Thermocouple Input Unit: Temperature sensor type, input range (user set), scaling of process value data to be stored in allocated words in CIO area, rate-of-change input range, scaling of rate-of-change data, number of items for moving average, process value alarm setting (LL, L, H, HH), rate-of-change alarm setting (L, H), zero/span adjustment value, etc.
	Expansion Control/ Monitor Area	35 words/Unit CPU Unit to Thermocouple Input Unit: Designations and flags for beginning or resetting the hold function selection, adjustment period control, etc. Thermocouple Input Unit to CPU Unit: Adjustment period notices (with each input), peak and bottom values, top and valley values
	Expansion Setting Area	46 words/Unit CPU Unit to Thermocouple Input Unit: Expansion Control/Monitor Area settings, adjustment period control, peak and bottom detection, top and valley detection
Number of temperature sensor inputs		4
Temperature sensor types		The sensor type, input range, and scaling can be set individually for each of 4 inputs, which are each selectable from B, E, J, K, L, N, R, S, T, U, WRe5-26, PL II, and mV.
Scaling		Data to be stored in the allocated words in the CIO area must be scaled (individually for each of the 4 inputs, with the minimum and maximum values set). Data can be stored at 0% to 100%.
Data storage in the CIO Area		The value derived from carrying out the following processing in order of the actual process data in the input range is stored in four digits hexadecimal (binary values) in the allocated words in the CIO Area. 1) Mean value processing → 2) Scaling → 3) Zero/span adjustment → 4) Output limits
Accuracy (25°C)		±0.05% (Depends on the Sensor used and the measured temperature. Refer to *Accuracy by Sensor Type and Measured Temperature Range* on page 13 for details.)
Temperature coefficient		±0.01% /°C (For full scale of electromotive force. See note.)
Resolution		1/64,000
Cold junction compensation error		±1°C, at 20°C±10°C
Warmup time		45 min
Maximum signal input		±120 mV
Input impedance		20 kΩ min.
Input disconnection detection current		0.1 μA (typical)
Response time		100 ms (travel time from input 0% to 90%, for ±100 mV step input and with moving average for 4 samples)
Conversion period		20 ms/4 inputs, 10 ms/2 inputs. Can be switched in DM Area words allocated to the Unit as a Special I/O Unit.
Maximum time to store data in CPU Unit		Conversion period + one CPU Unit cycle
Disconnection detection		Detects disconnections at each input and turns ON the Disconnection Detection Flag. Hardware detection time: Approx. 0.5 s max. The process value overrange direction for when a disconnection occurs can be specified. (High: 115% of set input range; low: −15% of set input range)
Function	**Mean value processing (input filter)**	Calculates the moving average for the specified number of process values (1 to 128), and stores that value in the CIO Area as the process value.
	Process value alarm	Process value 4-point alarm (HH, H, LL, L), alarm hysteresis, and ON-delay timer (0 to 60 s) are available.
	Rate-of-change calculation	Calculates the amount of change per comparison time interval (1 to 16 s).
	Rate-of-change alarm	Rate-of-change 2-point alarm (H, L), alarm hysteresis (shared with process value alarm), and ON-delay timer (0 to 60 s, shared with process value alarm) are available.
	Adjustment period control	When zero/span adjustment is executed, the date is internally recorded at the Unit. When the preset zero/span adjustment period and number of days notice have elapsed, this function turns ON a warning flag to give notice that it is time for readjustment.
	Peak and bottom detection	This function detects the maximum (peak) and minimum (bottom) analog input values, from when the Hold Start Bit (output) allocated to the Expansion Control/Monitor Area turns ON until it turns OFF, and stores them in the Expansion Control/Monitor Area.
	Top and valley detection	This function detects the top and valley values for analog inputs, from when the Hold Start Bit (output) allocated to the Expansion Control/Monitor Area turns ON until it turns OFF, and stores them in the Expansion Control/Monitor Area.
Isolation		Between inputs and PLC signals, and between inputs: Isolation by transformer for power supply, and by photocoupler for signals.
Insulation resistance		20 MΩ (at 500 V DC) between inputs
Dielectric strength		Between inputs: 1,000 V AC, at 50/60 Hz, for 1 min, leakage current 10 mA max.

Item	Specifications
External connections	Terminal block (detachable)
Unit number settings	Set by rotary switches on front panel, from 0 to 95.
Indicators	Three LED indicators on front panel (for normal operation, errors detected at the Thermocouple Input Unit, and errors related to the CPU Unit).
Front panel connector	Sensor input connector terminal block (detachable)
Effect on CPU Unit cycle time	0.3 ms
Current consumption (supplied from Power Supply Unit)	5 V DC at 120 mA max., 26 V DC at 80 mA max.
Dimensions	35 × 130 × 126 mm (W × H × D) **Note:** The height including the Backplane is 145 mm.
Weight	450 g max.
Standard accessories	Two cold junction sensors (mounted to terminal block)

Note: The method for calculating the error in temperature measurements, including the temperature coefficient, is given below. The "full scale of electromotive force" is the difference between the high limit and low limit converted to electromotive force for each thermocouple.

Example
Ambient temperature: 30 °C
Temperature Sensor: K thermocouple (–270 to 1,372 °C)
Measured temperature: 500 °C
From electromotive force table
–270 °C: –6.458 mV
1,372 °C: 54.86 mV
Full scale: 61.344
Electromotive conversion of temperature coefficient:
61.344 mV × ±0.01%/°C = ±6.13 μV/°C
Error in electromotive force at 30°C:
±6.13 μV/°C × (30°C – 25°C) = 30.65 μV/°C
Temperature difference between measurement point and terminals on Unit (ambient temperature) (based on ambient temperature of 30 °C and Measured temperature of 500 °C):
470 °C
Electromotive force per °C at a measured temperature of 470 °C (from the electromotive force tables for a K thermocouple):
43 μV/°C
Error in temperature coefficient: ±30.65 μV ÷ 43 μV/°C = ±0.7°C
Error in measured temperature = Accuracy ± Error from temperature coefficient + Error in cold junction compensation = ±0.8°C + ±0.7°C + ±1.0°C = ±2.5°C

Sensor Type and Input Range

The Temperature Sensor type and input range are set in the allocated words in the DM Area for every four inputs. The input range can be set anywhere within the measurable input ranges shown in the following table. Accuracy and resolution, however, are not determined from the set input range, but rather from the measurable input range shown in the following table. Therefore, accuracy and resolution do not change even when a narrow input range is set.

Sensor type	DM Area setting	Measurable input range
B	0	0 to 1,820°C
E	1	–270 to 1,000°C
J	2	–210 to 1,200°C
K	3	–270 to 1,372°C
N	4	–270 to 1,300°C
R	5	–50 to 1,768°C
S	6	–50 to 1,768°C
T	7	–270 to 400°C
mV	8	–100 to 100 mV
L	9	–200 to 900°C
U	10	–200 to 600°C
WRe5-26	11	0 to 2,300°C
PLII	12	0 to 1,300°C

Accuracy by Sensor Type and Measured Temperature Range

Sensor type	Temperature range	Standard accuracy	Details
B	0 to 1,820°C	±1.8°C (±0.1%)	400 to 800°C: ±3°C Less than 400°C: Accuracy is not specified.
E	−270 to 1,000°C	±0.6°C (±0.05%)	−250 to 200°C: ±1.2°C Less than −250°C: Accuracy is not specified.
J	−210 to 1,200°C	±0.7°C (±0.05%)	
K	−270 to 1,372°C	±0.8°C (±0.05%)	−250 to 200°C: ±2°C Less than −250°C: Accuracy is not specified.
N	−270 to 1,300°C	±0.8°C (±0.05%)	−200 to 150°C: ±1.6°C Less than −200°C: Accuracy is not specified.
R	−50 to 1,769°C	±1.8°C (±0.1%)	0 to 100°C: ±2.5°C Less than 0°C: Accuracy is not specified.
S	−50 to 1,769°C	±1.8°C (±0.1%)	0 to 100°C: ±2.5°C Less than 0°C: 3.2°C
T	−270 to 400°C	±0.35°C (±0.05%)	−180 to 0°C: ±0.7°C −200 to −180°C: ±1.3°C Less than −200°C: Accuracy is not specified.
L	−200 to 900°C	±0.5°C (±0.05%)	
U	−200 to 600°C	±0.4°C (±0.05%)	−100 to 0°C: ±0.5°C Less than −100°C: ±0.7°C
WRe5-26	0 to 2,315°C	±1.2°C (±0.05%)	More than 2,200°C: ±1.4°C
PLII	0 to 1,395°C	±0.7°C (±0.05%)	

Terminal Block Diagram

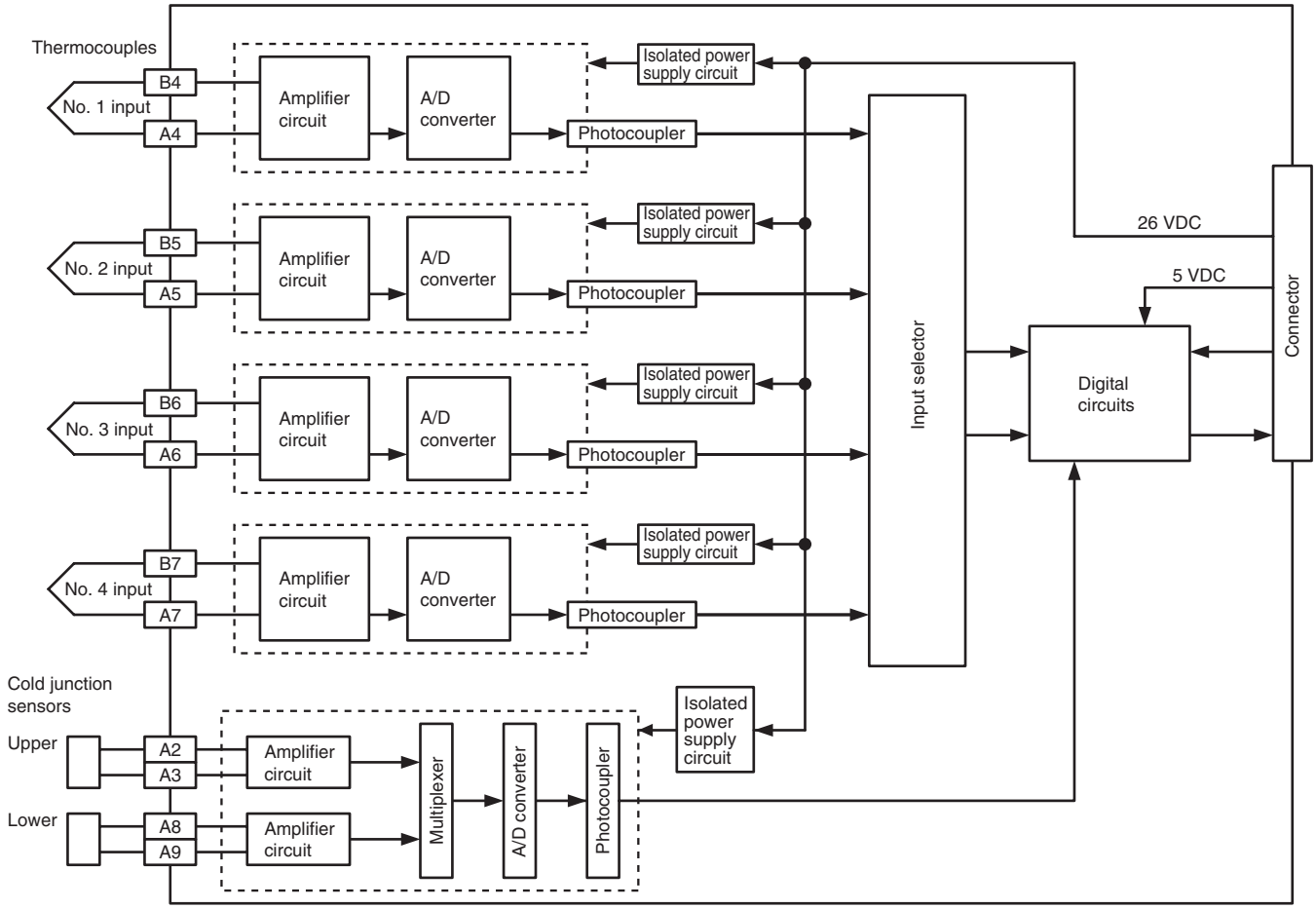

CS1W-PTS51 Isolated-type Thermocouple Input Unit

Overview

The CS1W-PTS51 Isolated-type Thermocouple Input Unit provides four direct thermocouple inputs, and sends the data to the CPU Unit each cycle. All inputs are isolated.

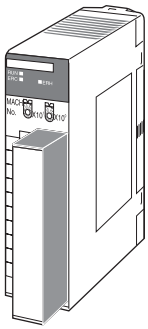

System Configuration

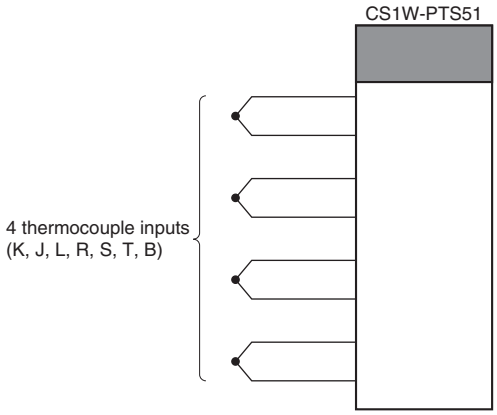

Specifications

Item		Specifications
Model		CS1W-PTS51
Applicable PLC		CS Series
Unit type		CS-series Special I/O Unit
Mounting position		CS-series CPU Rack or CS-series Expansion Rack (Cannot be mounted to C200H Expansion I/O Rack or SYSMAC BUS Remote I/O Slave Rack.)
Maximum number of Units		80 (within the allowable current consumption and power consumption range)
Unit numbers		00 to 95 (Cannot duplicate Special I/O Unit numbers.)
Areas for data exchange with CPU Unit	**Special I/O Unit Area**	10 words/Unit Isolated-type Thermocouple Input Unit to CPU Unit: All process values, process value alarms (L, H), conversion data enabled flags, sensor errors, cold junction sensor errors
	DM Area words allocated to Special I/O Units	100 words/Unit CPU Unit to Isolated-type Thermocouple Input Unit: Temperature sensor type, input range (user set), process value alarm setting (L, H), zero/span adjustment value.
Number of temperature sensor inputs		4
Temperature sensor types		The sensor type be set individually for each of 4 inputs, which are each selectable from K, J, L, R, S, T, B.
Data storage in the CIO Area		The actual process data in the input range is stored in four digits hexadecimal (binary or BCD values) in the allocated words in the CIO Area.
Accuracy (25°C) (See note.)		With Celsius selected: ±0.3% of PV or ±1°C, whichever is greater, ±1 digit max. With fahrenheit selected: ±0.3% of PV or ±2°F, whichever is greater, ±1 digit max. However, the accuracy of K and T at −100°C or lower and L is ±2°C ±1 digit max. The accuracy of R and S at 200°C or lower is ±3°C ±1 digit max. The accuracy of B at 400°C or lower is not specified. PV: Process value data
Temperature characteristic		Refer to *Temperature Characteristics According to Thermocouple Type* on page 16.
Warmup time		30 min
Conversion period		250 ms/4 inputs.
Maximum time to store data in CPU Unit		Conversion period + one CPU Unit cycle
Sensor error detection		Detects sensor error at each input and turns ON the Sensor error Flag. Hardware detection time: Approx. 0.5 s max. The process value overrange direction for when a sensor error occurs can be specified. (High: Set input range +20°C or +20°F; low: Set input range −20°C or −20°F)

Item		Specifications
Functions	**Process value alarm**	Process value 2-point alarm (HH, H, LL, L), alarm hysteresis, and ON-delay timer (0 to 60 s) are available. External alarm outputs: One per input (H or L).
	External alarm outputs	NPN outputs (with short-circuit protection) External power supply voltage: 20.4 to 26.4 V DC Max. switching capacity: 100 mA (for one output) Leakage current: 0.3 mA max. Residual voltage: 3 V max.
Isolation		Between inputs and PLC signals: Transformer for power supply and photocoupler for signals. Between each input: Transformer for power supply and photocoupler for signals.
Insulation resistance		20 MΩ max. (at 500 V DC). Between all output and NC terminals and external AC terminals (Power Supply Unit) Between all input terminals and external AC terminals (Power Supply Unit) Between all input terminals and all output terminals Between all external DC terminals (input, output, and NC terminals) and FG plate Between all input and output terminals and all NC terminals
Dielectric strength		Between all output and NC terminals and external AC terminals (Power Supply Unit) 2,000 VAC, 50/60 Hz 1 min., detection current: 1 mA Between all input terminals and external AC terminals (Power Supply Unit) Between all input terminals and all output terminals Between all external DC terminals (input, output, and NC terminals) and FG plate 1,000 VAC, 50/60 Hz 1 min., detection current: 1 mA Between all channels 500 VAC, 50/60 Hz 1 min., detection current: 1 mA
External connections		Terminal block (detachable)
Unit number settings		Set by rotary switches on front panel, from 0 to 95.
Indicators		Seven LED indicators on front panel (for normal operation, errors detected at the Thermocouple Input Unit, errors related to the CPU Unit, and four indicators for external alarm outputs.)
Effect on CPU Unit cycle time		0.4 ms
Current consumption (supplied from Power Supply Unit)		5 V DC at 250 mA max.
Dimensions		35 × 130 × 126 mm (W × H × D) **Note:** The height including the Backplane is 145 mm.
Weight		450 g max.

Note: The heat generated by a Unit will dramatically change the accuracy specifications when more than one C200HW-PA209R or CS1W-ID291 Unit is mounted side-by-side.
The following accuracy specifications apply under such conditions.
With Celsius selected:
±0.3% of PV or ±1.3°C, whichever is greater, ±1 digit max.
With Fahrenheit selected:
±0.3% of PV or ±3°F, whichever is greater, ±1 digit max.
However, the accuracy of K and T at −100°C or less and L is ±3°C ±1 digit max. The accuracy of R and S at 200°C or less is ±4°C ±1 digit max.
The accuracy of B at 400°C or less is not specified.

Sensor Type and Input Range

The Temperature Sensor type and input range are set in the allocated words in the DM Area for every four inputs.
The measurable data range is ±20 digits wider than the sensor input range.

Setting	Input	°C			°F		
		16-bit binary	BCD		16-bit binary	BCD	
			F□□□ indicates minus sign.	Leftmost bit indicates minus sign.		F□□□ indicates minus sign.	Leftmost bit indicates minus sign.
0	K: –200 to 1300°C (–300 to 2300°F)	FF38 to FFFF to 0514 (–200 to –1 to 1300)	F200 to 1300 (–200 to 1300)	8200 to 1300 (–200 to 1300)	FED4 to FFFF to 08FC (–300 to –1 to 2300)	F300 to 2300 (–300 to 2300)	F300 to 2300 (–300 to 2300)
1	K: 0.0 to 500°C (0.0 to 900.0°F)	0000 to 1388 (0.0 to 500.0)	0000 to 5000 (0.0 to 500.0)	0000 to 5000 (0.0 to 500.0)	0000 to 2328 (0.0 to 900.0)	0000 to 9000 (0.0 to 900.0)	0000 to 7999 (See note 3.) (0.0 to 799.9)
2	J: –100 to 850°C (–100 to 1500°F)	FF9C to FFFF to 0352 (–100 to –1 to 850)	F100 to 0850 (–100 to 850)	8100 to 0850 (–100 to 850)	FF9C to FFFF to 05DC (–100 to –1 to 1500)	F100 to 1500 (–100 to 1500)	8100 to 1500 (–100 to 1500)
3	J: 0.0 to 400.0°C (0.0 to 750.0°F)	0000 to 0FA0 (0.0 to 400.0)	0000 to 4000 (0.0 to 400.0)	0000 to 4000 (0.0 to 400.0)	0000 to 1D4C (0.0 to 750.0)	0000 to 7500 (0.0 to 750.0)	0000 to 7500 (0.0 to 750.0)
4	T: –200 to 400°C (–300 to 700.0°F)	F830 to FFFF to 0FA0 (–200.0 to –0.1 to 400.0)	F999 to 4000 (See note 3.) (–99.9 to 400.0)	A000 to 4000 (–200.0 to 400.0)	F448 to FFFF to 1B58 (–300.0 to –0.1 to 700.0)	F999 to 7000 (See note 3.) (–99.9 to 700.0)	B000 to 7000 (–300.0 to 700.0)
5	L: –100 to 850°C (–100 to 1500°F)	FF9C to FFFF to 0352 (–100 to –1 to 850)	F100 to 0850 (–100 to 850)	8100 to 0850 (–100 to 850)	FF9C to FFFF to 05DC (–100 to –1 to 1500)	F100 to 1500 (–100 to 1500)	8100 to 1500 (–100 to 1500)
6	L: 0.0 to 400.0°C (0.0 to 750.0°F)	0000 to 0FA0 (0.0 to 400.0)	0000 to 4000 (0.0 to 400.0)	0000 to 4000 (0.0 to 400.0)	0000 to 1D4C (0.0 to 750.0)	0000 to 7500 (0.0 to 750.0)	0000 to 7500 (0.0 to 750.0)
7	R: 0 to 1700°C (0 to 3000°F)	0000 to 06A4 (0 to 1700)	0000 to 1700 (0 to 1700)	0000 to 1700 (0 to 1700)	0000 to 0BB8 (0 to 3000)	0000 to 3000 (0 to 3000)	0000 to 3000 (0 to 3000)
8	S: 0 to 1700°C (0 to 3000°F)	0000 to 06A4 (0 to 1700)	0000 to 1700 (0 to 1700)	0000 to 1700 (0 to 1700)	0000 to 0BB8 (0 to 3000)	0000 to 3000 (0 to 3000)	0000 to 3000 (0 to 3000)
9	B: 400 to 1800°C (See note 2.) (750 to 3200°F)	0190 to 0708 (400 to 1800)	0400 to 1800 (400 to 1800)	0400 to 1800 (400 to 1800)	02EE to 0C80 (750 to 3200)	0750 to 3200 (750 to 3200)	0750 to 3200 (750 to 3200)

Note: 1. If the indication range is exceeded, a sensor error will occur and the sensor error bit will turn ON. The process value will be clamped at the lower or upper limit of the indication range, depending on the setting for data direction at sensor error.
2. The lower limit for B thermocouples is 0°C/°F.
3. The indicator range for BCD display will be clamped at the lower (or upper) limit in the region between the lower (or upper) limit of the setting range and the point where a sensor error occurs.
For 0.1°C/0.1°F indication with minus sign indicated by leftmost 4 bits (bits 12 to 15): Lower limit = –99.9, Upper limit = 999.9.
For 0.1°C/0.1°F indication with minus sign indicated by leftmost bit (bit 15): Lower limit = –799.9, Upper limit = 799.9.

Temperature Characteristics According to Thermocouple Type

Thermocouple	Temperature range	Set value error when ambient temperature changes by 1°C
R	0 to 200°C	±0.43°C
	200 to 1,000°C	±0.29°C
	1,000 to 1,700°C	±285 ppm of PV
S	0 to 200°C	±0.43°C
	200 to 1,000°C	±0.29°C
	1,000 to 1,700°C	285 ppm of PV
B	400°C or less	Not specified.
	400 to 800°C	±0.43°C
	800 to 1,000°C	±0.29°C
	1,000 to 1,800°C	285 ppm of PV
K	–200 to –100°C	±0.29°C
	–100 to 400°C	±0.11°C
	400 to 1,300°C	±285 ppm of PV
J	–100 to 400°C	±0.11°C
	400 to 850°C	±285 ppm of PV
T	–200 to –100°C	±0.29°C
	–100 to 400°C	±0.11°C
L	–100 to 400°C	±0.11°C
	400 to 850°C	±285 ppm of PV

The measured temperature error is calculated as shown in the following example.

Item	Details
Ambient temperature	30°C
Thermocouple type	K
Measured temperature (PV)	500°C
Reference accuracy (25°C)	±0.3°C of PV or ±1°C, whichever is greater, ±1 digit. In this example, ±1.5°C.
Temperature characteristics	400 to 1,300°C: 285 ppm of PV. In this example, 285 ppm × 500°C = 0.143°C.
Change in ambient temperature	5°C (25 to 30°C).

Overall accuracy =
Reference accuracy + Temperature characteristic × Change in ambient temperature = ±1.5°C + ±0.143°C × 5 = Approx. ±2.2°C ± 1 digit.

Terminal Connection Diagram

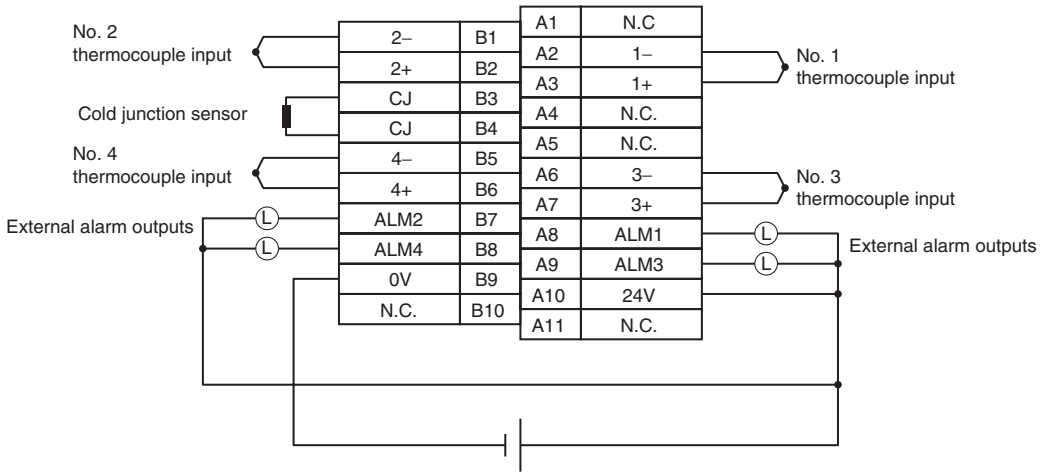

Note: Action for Unused Input Terminals

- Short-circuit the positive (+) and negative (–) sides of the thermocouple input section using a lead wire. For example, short terminals A3 and A2 for No. 1 thermocouple input.
- Cold junction sensors are mounted before shipment. If one of the cold junction sensors is disconnected, cold junction compensation will stop and correct measurement of temperatures cannot be made. Always make sure the cold junction sensors are connected when using the Units.
- Cold junction sensors are calibrated separately for each Unit and connected circuit, so correct temperatures will not be measured if a cold junction sensor from another Unit is used or if the two cold junction sensors in a Unit are swapped. Use the cold junction sensors as they are provided, without making any changes.
- Do not connect anything to NC terminals. Do not use NC terminals as relay terminals.
- Always ground the GR terminal on the Power Supply Unit of the PLC.
- If the input device uses a voltage generator, temperature compensator, or similar device, then ground the input device if it has a ground terminal.

Terminal Block Diagram

Input Circuits

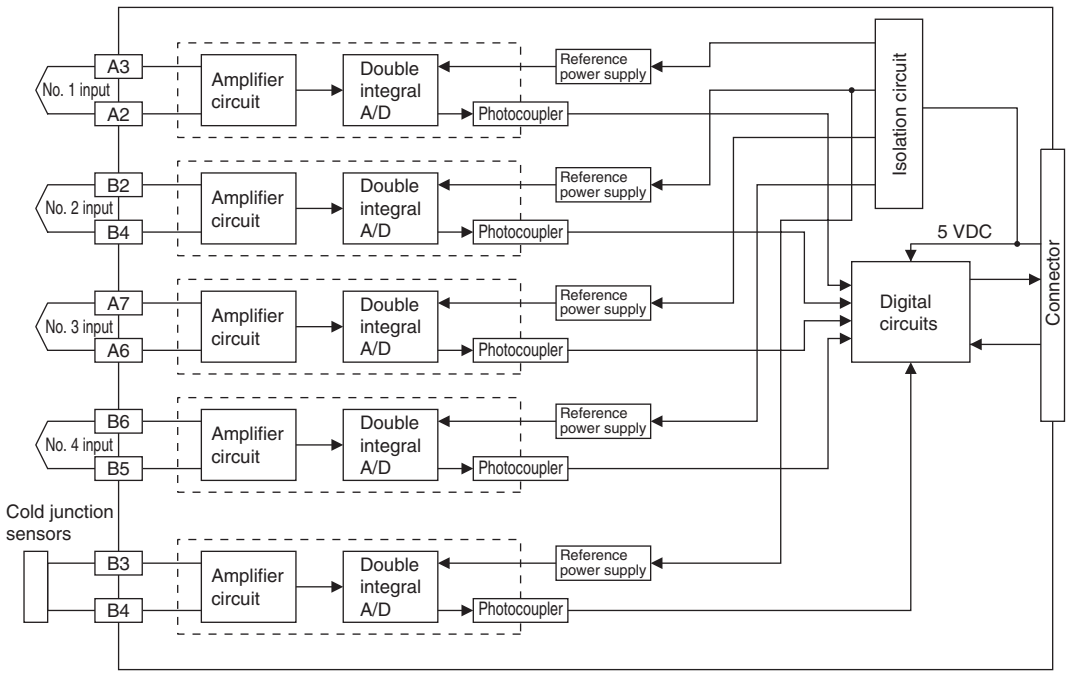

Output Circuits

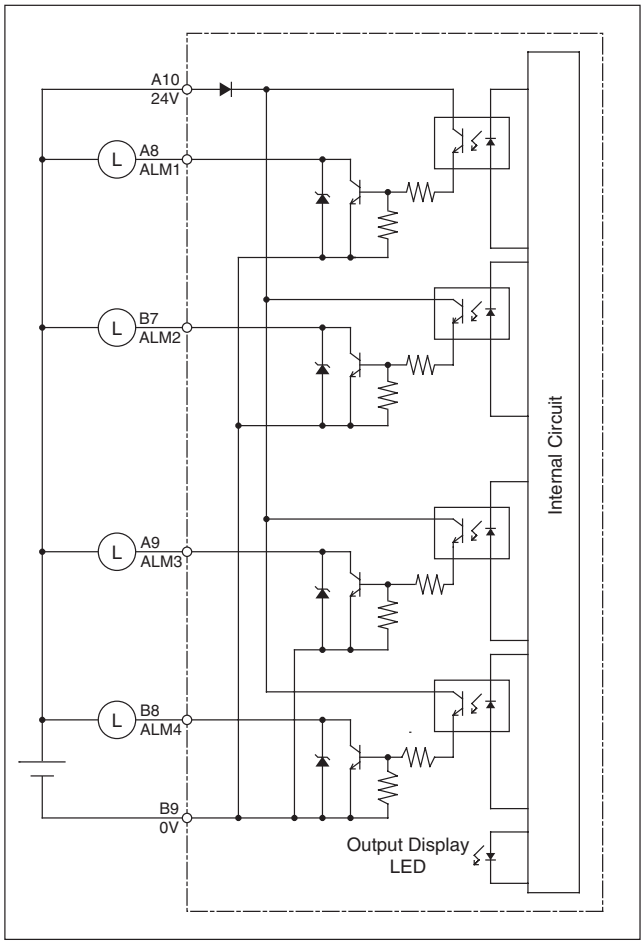

CS1W-PTS55 Isolated-type Thermocouple Input Unit

Overview

The CS1W-PTS55 Isolated-type Thermocouple Input Unit provides 8 direct thermocouple inputs, and sends the data to the CPU Unit each cycle. All inputs are isolated.

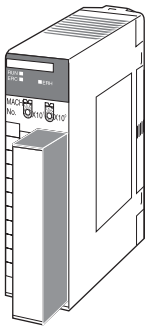

System Configuration

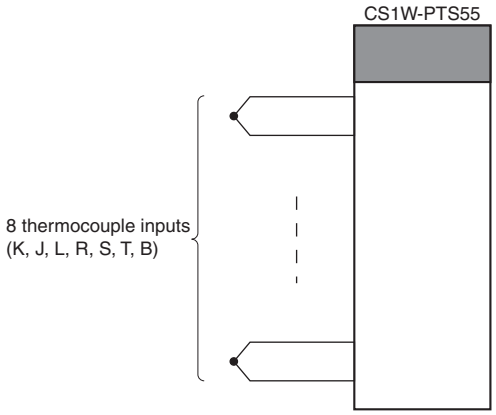

Specifications

Item		Specifications
Model		CS1W-PTS55
Applicable PLC		CS Series
Unit type		CS-series Special I/O Unit
Mounting position		CS-series CPU Rack or CS-series Expansion Rack (Cannot be mounted to C200H Expansion I/O Rack or SYSMAC BUS Remote I/O Slave Rack.)
Maximum number of Units		80 (within the allowable current consumption and power consumption range)
Unit numbers		00 to 95 (Cannot duplicate Special I/O Unit numbers.)
Areas for data exchange with CPU Unit	**Special I/O Unit Area**	10 words/Unit Isolated-type Thermocouple Input Unit to CPU Unit: All process values, process value alarms (L, H), conversion data enabled flags, sensor errors, cold junction sensor errors
	DM Area words allocated to Special I/O Units	100 words/Unit CPU Unit to Isolated-type Thermocouple Input Unit: Temperature sensor type, input range (user set), process value alarm setting (L, H), zero/span adjustment value.
	Expansion Setting Area	1 word/Unit CPU Unit to Isolated-type Thermocouple Input Unit: Process Value Alarm
Number of temperature sensor inputs		8
Temperature sensor types		The sensor type be set individually for each of 8 inputs, which are each selectable from K, J, L, R, S, T, B (“Not used” can be selected).
Data storage in the CIO Area		The actual process data in the input range is stored in four digits hexadecimal (binary or BCD values) in the allocated words in the CIO Area.
Accuracy (25°C)		With Celsius selected: ±0.3% of PV or ±1°C, whichever is greater, ±1 digit max. With fahrenheit selected: ±0.3% of PV or ±2°F, whichever is greater, ±1 digit max. However, the accuracy of K and T at −100°C or lower and L is ±2°C ±1 digit max. The accuracy of R and S at 200°C or lower is ±3°C ±1 digit max. The accuracy of B at 400°C or lower is not specified. PV: Process value data
Temperature characteristic		Refer to *Temperature Characteristics According to Thermocouple Type* on page 21.
Warmup time		30 min
Conversion period		250 ms/8 inputs.
Maximum time to store data in CPU Unit		Conversion period + one CPU Unit cycle
Sensor error detection		Detects sensor error at each input and turns ON the Sensor error Flag. Hardware detection time: Approx. 0.5 s max. The process value overrange direction for when a sensor error occurs can be specified. (High: Set input range +20°C or +20°F; low: Set input range −20°C or −20°F)
Functions	**Process value alarm**	Process value 2-point alarm (H, L), alarm hysteresis, and ON-delay timer (0 to 60 s) are available. Two alarms per input (H, L) can be output to addresses in the CIO Area specified in the Expansion Setting Area.
Isolation		Between inputs and PLC signals: Transformer for power supply and photocoupler for signals. Between each input: Transformer for power supply and photocoupler for signals.
Insulation resistance		20 MΩ max. (at 500 V DC). Between all input terminals and external AC terminals (Power Supply Unit) Between all external DC terminals (input and NC terminals) and FG plate Between all input and all NC terminals
Dielectric strength		Between NC terminals and external AC terminals (Power Supply Unit) 2,000 VAC, 50/60 Hz 1 min., detection current: 1 mA Between all input terminals and external AC terminals (Power Supply Unit) Between all external DC terminals (input and NC terminals) and FG plate 1000 VAC, 50/60 Hz 1 min., detection current: 1 mA Between all channels 500 VAC, 50/60 Hz 1 min., detection current: 1 mA
External connections		Terminal block (detachable)
Unit number settings		Set by rotary switches on front panel, from 0 to 95.
Indicators		Three LED indicators on front panel (for normal operation, errors detected at the Unit, errors related to the CPU Unit)
Effect on CPU Unit cycle time		0.4 ms
Current consumption (supplied from Power Supply Unit)		5 V DC at 180 mA max. 26 V DC at 60 mA max.
Dimensions		35 × 130 × 126 mm (W × H × D) **Note:** The height including the Backplane is 145 mm.
Weight		450 g max.

Sensor Type and Input Range

The Temperature Sensor type and input range are set in the allocated words in the DM Area for every four inputs.
The measurable data range is ±20 digits wider than the sensor input range.

Setting	Input	°C			°F		
		16-bit binary	BCD		16-bit binary	BCD	
			F□□□ indicates minus sign.	Leftmost bit indicates minus sign.		F□□□ indicates minus sign.	Leftmost bit indicates minus sign.
0	K: –200 to 1300°C (–300 to 2300°F)	FF38 to FFFF to 0514 (–200 to –1 to 1300)	F200 to 1300 (–200 to 1300)	8200 to 1300 (–200 to 1300)	FED4 to FFFF to 08FC (–300 to –1 to 2300)	F300 to 2300 (–300 to 2300)	F300 to 2300 (–300 to 2300)
1	K: 0.0 to 500°C (0.0 to 900.0°F)	0000 to 1388 (0.0 to 500.0)	0000 to 5000 (0.0 to 500.0)	0000 to 5000 (0.0 to 500.0)	0000 to 2328 (0.0 to 900.0)	0000 to 9000 (0.0 to 900.0)	0000 to 7999 (See note 3.) (0.0 to 799.9)
2	J: –100 to 850°C (–100 to 1500°F)	FF9C to FFFF to 0352 (–100 to –1 to 850)	F100 to 0850 (–100 to 850)	8100 to 0850 (–100 to 850)	FF9C to FFFF to 05DC (–100 to –1 to 1500)	F100 to 1500 (–100 to 1500)	8100 to 1500 (–100 to 1500)
3	J: 0.0 to 400.0°C (0.0 to 750.0°F)	0000 to 0FA0 (0.0 to 400.0)	0000 to 4000 (0.0 to 400.0)	0000 to 4000 (0.0 to 400.0)	0000 to 1D4C (0.0 to 750.0)	0000 to 7500 (0.0 to 750.0)	0000 to 7500 (0.0 to 750.0)
4	T: –200 to 400°C (–300 to 700.0°F)	F830 to FFFF to 0FA0 (–200.0 to –0.1 to 400.0)	F999 to 4000 (See note 3.) (–99.9 to 400.0)	A000 to 4000 (–200.0 to 400.0)	F448 to FFFF to 1B58 (–300.0 to –0.1 to 700.0)	F999 to 7000 (See note 3.) (–99.9 to 700.0)	B000 to 7000 (–300.0 to 700.0)
5	L: –100 to 850°C (–100 to 1500°F)	FF9C to FFFF to 0352 (–100 to –1 to 850)	F100 to 0850 (–100 to 850)	8100 to 0850 (–100 to 850)	FF9C to FFFF to 05DC (–100 to –1 to 1500)	F100 to 1500 (–100 to 1500)	8100 to 1500 (–100 to 1500)
6	L: 0.0 to 400.0°C (0.0 to 750.0°F)	0000 to 0FA0 (0.0 to 400.0)	0000 to 4000 (0.0 to 400.0)	0000 to 4000 (0.0 to 400.0)	0000 to 1D4C (0.0 to 750.0)	0000 to 7500 (0.0 to 750.0)	0000 to 7500 (0.0 to 750.0)
7	R: 0 to 1700°C (0 to 3000°F)	0000 to 06A4 (0 to 1700)	0000 to 1700 (0 to 1700)	0000 to 1700 (0 to 1700)	0000 to 0BB8 (0 to 3000)	0000 to 3000 (0 to 3000)	0000 to 3000 (0 to 3000)
8	S: 0 to 1700°C (0 to 3000°F)	0000 to 06A4 (0 to 1700)	0000 to 1700 (0 to 1700)	0000 to 1700 (0 to 1700)	0000 to 0BB8 (0 to 3000)	0000 to 3000 (0 to 3000)	0000 to 3000 (0 to 3000)
9	B: 400 to 1800°C (See note 2.) (750 to 3200°F)	0190 to 0708 (400 to 1800)	0400 to 1800 (400 to 1800)	0400 to 1800 (400 to 1800)	02EE to 0C80 (750 to 3200)	0750 to 3200 (750 to 3200)	0750 to 3200 (750 to 3200)

Note: 1. If the indication range is exceeded, a sensor error will occur and the sensor error bit will turn ON. The process value will be clamped at the lower or upper limit of the indication range, depending on the setting for data direction at sensor error.
2. The lower limit for B thermocouples is 0°C/°F.
3. The indicator range for BCD display will be clamped at the lower (or upper) limit in the region between the lower (or upper) limit of the setting range and the point where a sensor error occurs.
For 0.1°C/0.1°F indication with minus sign indicated by leftmost 4 bits (bits 12 to 15): Lower limit = –99.9, Upper limit = 999.9.
For 0.1°C/0.1°F indication with minus sign indicated by leftmost bit (bit 15): Lower limit = –799.9, Upper limit = 799.9.

Temperature Characteristics According to Thermocouple Type

Thermocouple	Temperature range	Set value error when ambient temperature changes by 1°C
R	0 to 200°C	±0.43°C
	200 to 1,000°C	±0.29°C
	1,000 to 1,700°C	±285 ppm of PV
S	0 to 200°C	±0.43°C
	200 to 1,000°C	±0.29°C
	1,000 to 1,700°C	285 ppm of PV
B	400°C or less	Not specified.
	400 to 800°C	±0.43°C
	800 to 1,000°C	±0.29°C
	1,000 to 1,800°C	285 ppm of PV
K	–200 to –100°C	±0.29°C
	–100 to 400°C	±0.11°C
	400 to 1,300°C	±285 ppm of PV
J	–100 to 400°C	±0.11°C
	400 to 850°C	±285 ppm of PV
T	–200 to –100°C	±0.29°C
	–100 to 400°C	±0.11°C
L	–100 to 400°C	±0.11°C
	400 to 850°C	±285 ppm of PV

The measured temperature error is calculated as shown in the following example.

Item	Details
Ambient temperature	30°C
Thermocouple type	K
Measured temperature (PV)	500°C
Reference accuracy (25°C)	±0.3°C of PV or ±1°C, whichever is greater, ±1 digit. In this example, ±1.5°C.
Temperature characteristics	400 to 1,300°C: 285 ppm of PV. In this example, 285 ppm × 500°C = 0.143°C.
Change in ambient temperature	5°C (25 to 30°C).

Overall accuracy =
Reference accuracy + Temperature characteristic × Change in ambient temperature = ±1.5°C + ±0.143°C × 5 = Approx. ±2.2°C ±1 digit.

Terminal Connection Diagram

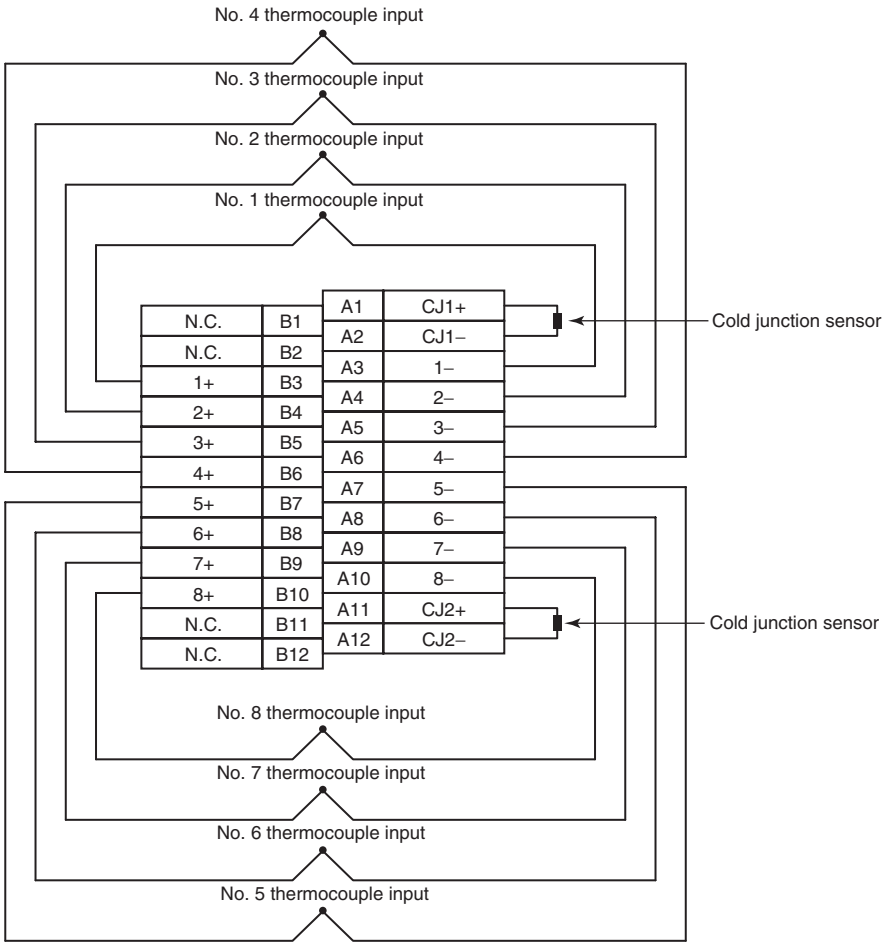

Note:
- Set the *Sensor type* in Setting Group 2 in the DM Area to "Not used" for any thermocouple inputs that are not used.
- Cold junction sensors are mounted before shipment. If one of the cold junction sensors is disconnected, cold junction compensation will stop and correct measurement of temperatures cannot be made. Always make sure the cold junction sensors are connected when using the Units.
- Cold junction sensors are calibrated separately for each Unit and connected circuit, so correct temperatures will not be measured if a cold junction sensor from another Unit is used or if the two cold junction sensors in a Unit are swapped. Use the cold junction sensors as they are provided, without making any changes.
- Do not connect anything to NC terminals. Do not use NC terminals as relay terminals.
- Always ground the GR terminal on the Power Supply Unit of the PLC.
- If the input device uses a voltage generator, temperature compensator, or similar device, then ground the input device if it has a ground terminal.

Terminal Block Diagram

Input Circuits

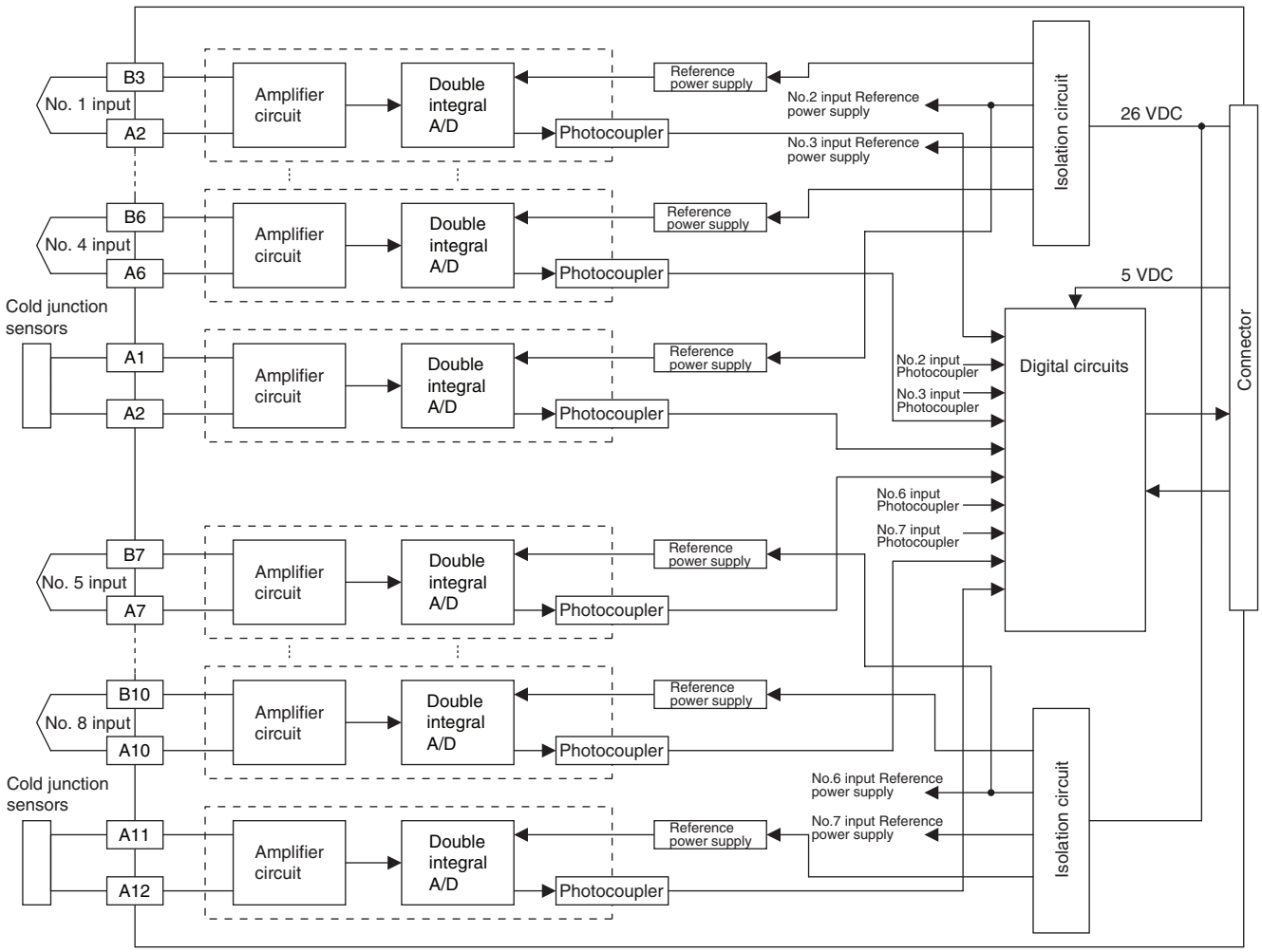

CS1W-PTS02 Isolated-type Resistance Thermometer Input Unit (Pt100 or JPt100)

Overview

The CS1W-PTS02 Isolated-type Resistance Thermometer Input Unit provides four direct platinum resistance thermometer inputs, and sends the data to the CPU Unit each cycle. All inputs are isolated.

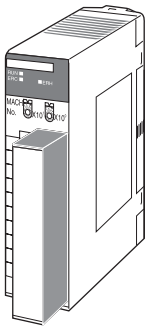

System Configuration

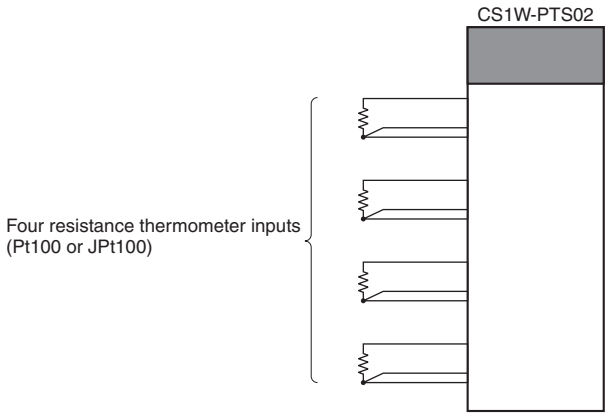

Specifications

Item		Specifications	
Model		CS1W-PTS02	
Applicable PLC		CS Series	
Unit type		CS-series Special I/O Unit	
Mounting position		CS-series CPU Rack or CS-series Expansion Rack (Cannot be mounted to C200H Expansion I/O Rack or SYSMAC BUS Remote I/O Slave Rack.)	
Maximum number of Units		80 (within the allowable current consumption and power consumption range)	
Unit numbers		00 to 95 (Cannot duplicate Special I/O Unit numbers.)	
Areas for data exchange with CPU Unit	**Special I/O Unit Area**	10 words/Unit Resistance Thermometer Input Unit to CPU Unit: All process values, process value alarms (LL, L, H, HH), rate-of-change values, rate-of-change alarms (L, H), disconnection alarms, cold junction sensor errors	
	DM Area words allocated to Special I/O Units	100 words/Unit CPU Unit to Resistance Thermometer Input Unit: Temperature sensor type, input range (user set), scaling of process value data to be stored in allocated words in CIO area, number of items for moving average, process value alarm setting (LL, L, H, HH), rate-of-change alarm setting (L, H), zero/span adjustment value, etc.	
Number of temperature sensor inputs		4	
Temperature sensor types		Pt100 (JIS, IEC) or JPt100	Sensor type, input range, and scaling to industrial units are separate for each of the 4 inputs. **Note:** Sensor type, input range, and scaling to industrial units are set in the DM Area.
Input ranges		The input range can be set within any of the measurable input ranges shown in Table 1 (below). **Note:** Internally, inputs are processed in five ranges (refer to Table 2 below), so accuracy and resolution accord with these internal ranges.	Example: Sensor type: Pt100; input range: 0 to 500°C; industrial unit scaling: 0.0 to 500°C. DM Area settings are as follows: Sensor type: 0 (0000 hex) Input signal maximum: 5000 (1388 hex) Input signal minimum: 0 (0000 hex) Industrial unit maximum value stored: 500 (01F4 hex) Industrial unit minimum value stored: 0 (0000 hex)
Scaling in industrial units		Data to be stored in the allocated words in the CIO area must be scaled (individually for each of 4 inputs, with the minimum and maximum values set). Data can be stored at 0% to 100%.	
Data storage in the CIO Area		The value derived from carrying out the following processing in order of the actual process data in the input range is stored in four digits hexadecimal (binary values) in the allocated words in the CIO Area. 1) Mean value processing → 2) Scaling → 3) Zero/span adjustment → 4) Output limits	

Item		Specifications
Accuracy (25°C)		The greater of the following: ±0.1% (of internal range full span) or 0.1°C As shown in the following equation, the accuracy depends on the ratio of the selected internal range (0 to 4) span to the set input range span. $\text{Accuracy} = \pm 0.1\% \times \frac{\text{Internal range span}}{\text{Set input range span}}$ or 0.1°C, whichever is greater.
Temperature coefficient		±0.015% /°C, for any of internal range numbers 0 to 4.
Resolution		1/4,096 (of internal range full span) As shown in the following equation, the resolution depends on the ratio of the selected internal range (0 to 4) span to the set input range span. $\text{Resolution} = \frac{1}{4096} \times \frac{\text{Internal range span}}{\text{Set input range span}}$
Sensing method		3-wire method
Allowable lead wire resistance		20 Ω max. per wire
Input detection current		0.25 mA
Warmup time		10 min
Response time		0.5 s (travel time from input 0% to 90%, for step input)
Conversion period		100 ms/4 inputs
Maximum time to store data in CPU Unit		Conversion period + one CPU Unit cycle
Disconnection detection		Detects disconnections at each input and turns ON the Disconnection Detection Flag. Hardware detection time: Approx. 1 s The process value overrange direction for when a disconnection occurs can be specified. (High: 115% of set input range; low: −15% of set input range)
Function	**Mean value processing (input filter)**	Calculates the moving average for the specified number of process values (1 to 16), and stores that value in the CIO Area as the process value.
	Process value alarm	Process value 4-point alarm (HH, H, LL, L), alarm hysteresis, and ON-delay timer (0 to 60 s) are available.
	Rate-of-change calculation	Calculates the amount of change per comparison time interval (1 to 16 s).
	Rate-of-change alarm	Rate-of-change 2-point alarm (H, L), alarm hysteresis (shared with process value alarm), and ON-delay timer (0 to 60 s, shared with process value alarm) are available.
Isolation		Between temperature inputs and between input terminals and PLC signals: Isolation by transformer
Insulation resistance		20 MΩ (at 500 V DC) between inputs
Dielectric strength		Between inputs: 1,000 V AC, at 50/60 Hz, for 1 min, leakage current 10 mA max.
External connections		Terminal block (detachable)
Unit number settings		Set by rotary switches on front panel, from 0 to 95.
Indicators		Three LED indicators on front panel (for normal operation, errors detected at the Resistance Thermometer Input Unit, and errors related to the CPU Unit).
Front panel connector		Sensor input connector terminal block (detachable)
Effect on CPU Unit cycle time		0.3 ms
Current consumption		5 V DC at 150 mA max., 26 V DC at 150 mA max.
Dimensions		35 × 130 × 126 mm (W × H × D) **Note:** The height including the Backplane is 145 mm.
Weight		450 g max.
Standard accessories		None

Sensor Type and Input Range

The resistance thermometer type and input range are set in the allocated words in the DM Area for every four inputs. The input range can be set anywhere within the measurable input ranges shown in Table 1.

Table 1: Measurable Input Ranges

Sensor type	DM Area setting	Measurable input range (See note.)
Pt100	0	–200 to 850°C
JPt100	1	–200 to 500°C

Note: Set the input range in the DM Area within this range.

Internally inputs are processed in five progressive ranges (numbers 0 to 4), as shown in the following table.

Table 2: Internal Ranges

Internal range number	Temperature range	Span
0	–200 to 850°C	1,050°C
1	–200 to 438°C	638°C
2	–200 to 211°C	411°C
3	–100 to 104°C	204°C
4	–51 to 52°C	103°C

Therefore, the accuracy and resolution are determined by the ratio of the selected internal range (0 to 4) span to the set input range span. For the internal range, a larger number is selected when both the minimum and maximum values of the range fall within that next range.
For example, suppose that the sensor type is Pt100 and the set input range is –100 to 400°C. Since both the minimum and maximum values fall within the limits for internal range No. 1 (–200 to 438°C), that range will be selected.

Note: With Resistance Thermometer Input Units, process values can be scaled (e.g., 0% to 100%) in industrial units for the set input range. It is possible to set the process value scaling higher than the resolution, but it will cause the values to be unstable.

Terminal Connection Diagram

CS1W-PTS02 Isolated-type Resistance Thermometer Unit

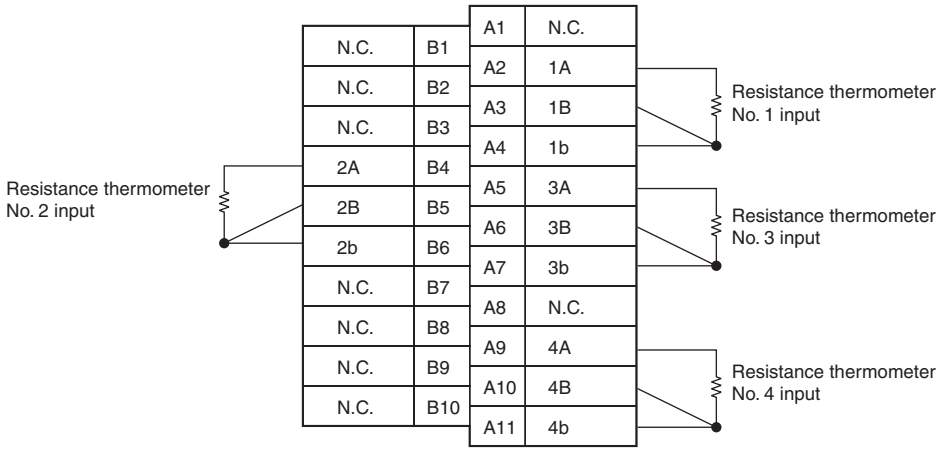

Note: 1. Wire the same length to A, B, and b, so that the impedance will be the same. In particular, do not short circuit between B and b at the terminal block.
2. For unused input terminals, short-circuit between A-B and B-b (e.g., A2-A3 and A3-A4 for input No. 1) of the resistance thermometer inputs with the lead wire.

Terminal Block Diagram

CS1W-PTS02 Isolated-type Resistance Thermometer Input Unit

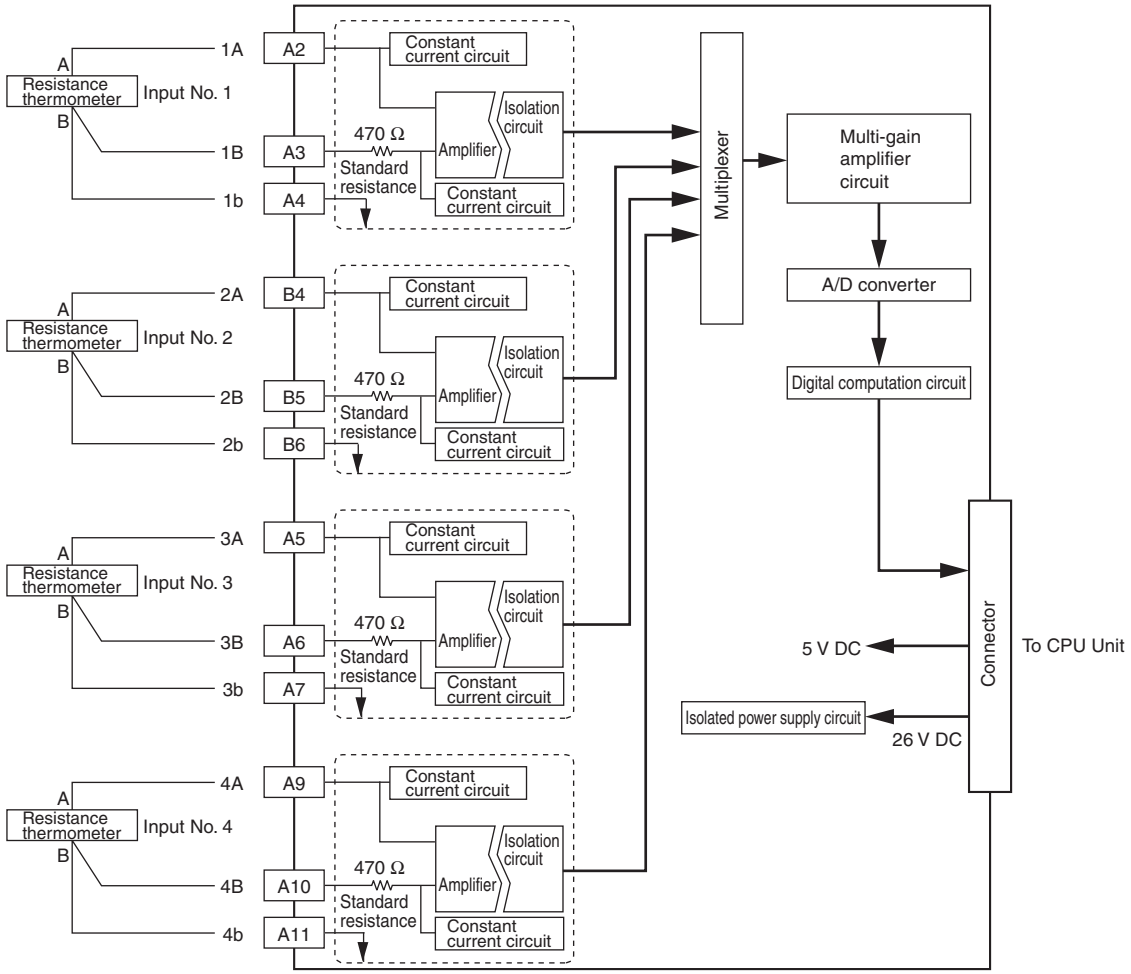

CS1W-PTS03 Isolated-type Resistance Thermometer Input Unit (Ni508.4)

Overview

The CS1W-PTS03 Isolated-type Resistance Thermometer Input Unit provides four direct Ni thermometer inputs, and sends the data to the CPU Unit each cycle. All inputs are isolated.

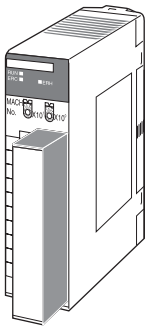

System Configuration

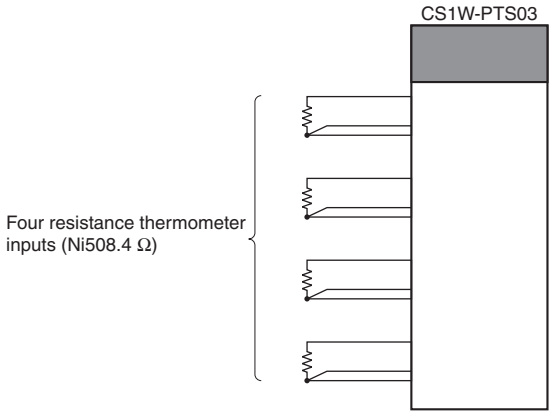

Specifications

Item		Specifications	
Model		CS1W-PTS03	
Applicable PLC		CS Series	
Unit type		CS-series Special I/O Unit	
Mounting position		CS-series CPU Rack or CS-series Expansion Rack (Cannot be mounted to C200H Expansion I/O Rack or SYSMAC BUS Remote I/O Slave Rack.)	
Maximum number of Units		80 (within the allowable current consumption and power consumption range)	
Unit numbers		00 to 95 (Cannot duplicate Special I/O Unit numbers.)	
Areas for data exchange with CPU Unit	**Special I/O Unit Area**	10 words/Unit Resistance Thermometer Input Unit to CPU Unit: All process values, process value alarms (LL, L, H, HH), rate-of-change values, rate-of-change alarms (L, H), disconnection alarms	
	DM Area words allocated to Special I/O Units	100 words/Unit CPU Unit to Resistance Thermometer Input Unit: Temperature sensor type, input range (user set), scaling of process value data to be stored in allocated words in CIO area, number of items for moving average, process value alarm setting (LL, L, H, HH), rate-of-change alarm setting (L, H), zero/span adjustment value, etc.	
Number of temperature sensor inputs		4	
Temperature sensor types		Ni508.4	Input range and scaling to industrial units are separate for each of the 4 inputs. **Note:** Sensor type, input range, and scaling to industrial units are set in the DM Area.
Input ranges		The input range can be set within a range of –50 to 150°C (variable setting). **Note:** Internally, inputs are processed in the above range (refer to Table 2 below), so accuracy and resolution accord with this internal range.	Example: Input range: –50 to 100°C; industrial unit scaling: –50.0 to 100.0°C. DM Area settings are as follows: Input signal maximum: 1000 (03E8 hex) Input signal minimum: –500 (FE0C hex) Industrial unit maximum value stored: 1000 (03E8 hex) Industrial unit minimum value stored: –500 (FE0C hex)
Scaling in industrial units		Data to be stored in the allocated words in the CIO area must be scaled (with the minimum and maximum values set). Data can be stored at 0% to 100%.	
Data storage in the CIO Area		The value derived from carrying out the following processing in order of the actual process data in the input range is stored in four digits hexadecimal (binary values) in the allocated words in the CIO Area. 1) Mean value processing → 2) Scaling → 3) Zero/span adjustment → 4) Output limits	

Item		Specifications
Accuracy (25°C)		The greater of the following: ±0.2% (of internal range full span) or 0.2°C As shown in the following equation, the accuracy depends on the ratio of the selected internal range (0 to 4) span to the set input range span. $\text{Accuracy} = \pm 0.1\% \times \frac{\text{Internal range span}}{\text{Set input range span}}$ or 0.2°C, whichever is greater.
Temperature coefficient		±0.015% /°C, for any of internal range numbers 0 to 4.
Resolution		1/4,096 (of internal range full span) As shown in the following equation, the resolution depends on the ratio of the internal range span to the set input range span. $\text{Resolution} = \frac{1}{4096} \times \frac{\text{Internal range span}}{\text{Set input range span}}$
Sensing method		3-wire method
Allowable lead wire resistance		20 Ω max. per wire
Input detection current		0.25 mA
Warmup time		10 min
Response time		0.5 s (travel time from input 0% to 90%, for step input)
Conversion period		100 ms/4 inputs
Maximum time to store data in CPU Unit		Conversion period + one CPU Unit cycle
Disconnection detection		Detects disconnections at each input and turns ON the Disconnection Detection Flag. Hardware detection time: Approx. 1 s The process value high/low direction for when a disconnection occurs can be specified. (High: 115% of set input range; low: −15% of set input range)
Function	**Mean value processing (input filter)**	Calculates the moving average for the specified number of process values (1 to 16), and stores that value in the CIO Area as the process value.
	Process value alarm	Process value 4-point alarm (HH, H, LL, L), alarm hysteresis, and ON-delay timer (0 to 60 s) are available.
	Rate-of-change calculation	Calculates the amount of change per comparison time interval (1 to 16 s).
	Rate-of-change alarm	Rate-of-change 2-point alarm (H, L), alarm hysteresis (shared with process value alarm), and ON-delay timer (0 to 60 s, shared with process value alarm) are available.
Isolation		Between temperature inputs and between input terminals and PLC signals: Isolation by transformer
Insulation resistance		20 MΩ (at 500 V DC) between inputs
Dielectric strength		Between inputs: 1,000 V AC, at 50/60 Hz, for 1 min, leakage current 10 mA max.
External connections		Terminal block (detachable)
Unit number settings		Set by rotary switches on front panel, from 0 to 95.
Indicators		Three LED indicators on front panel (for normal operation, errors detected at the Resistance Thermometer Input Unit, and errors related to the CPU Unit).
Front panel connector		Sensor input connector terminal block (detachable)
Effect on CPU Unit cycle time		0.3 ms
Current consumption		5 V DC at 150 mA max., 26 V DC at 150 mA max.
Dimensions		35 × 130 × 126 mm (W × H × D) **Note:** The height including the Backplane is 145 mm.
Weight		450 g max.
Standard accessories		None

Sensor Type and Input Range

The input range is set in the allocated words in the DM Area for every four inputs. It can be set anywhere within the measurable input range shown in Table 1.

Measurable Input Range

Sensor type	Measurable Input range (See note.)
Ni508.4	–50 to 150°C

Note: Set the input range in the DM Area within this range.

Even if the input range is set more narrowly than the range of –50 to 150°C, internally inputs will be processed according to the internal range shown in the following table.

Internal range

Internal range temperatures	Internal range span
–50 to 150°C	200°C

Therefore, the accuracy and resolution are determined by the ratio of the internal range span to the set input range span.
Example: Even if the set input range is –50 to 100°C, internally inputs will be processed according to the internal range of –50 to 150°C.

Note: With Resistance Thermometer Units (Ni508.4), process values can be scaled (e.g., 0% to 100%) in industrial units for the set input range. Generally, however, set the same values for process value scaling in industrial units as for the set input range. It is possible to set the process value scaling higher than the resolution, but it will cause the values to be unstable.

Terminal Connection Diagram

CS1W-PTS03 Isolated-type Resistance Thermometer Unit

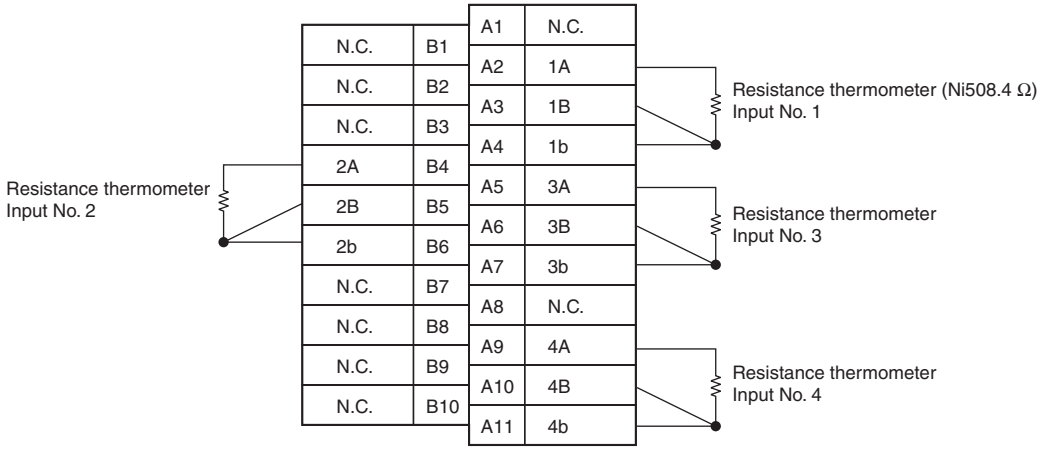

Note: 1. Wire the same length to A, B, and b, so that the impedance will be the same. In particular, do not short circuit between B and b at the terminal block.
2. For unused input terminals, short-circuit between A-B and B-b (e.g., A2-A3 and A3-A4 for input No. 1) of the resistance thermometer inputs with the lead wire.

Terminal Block Diagram

CS1W-PTS03 Isolated-type Resistance Thermometer Input Unit (Ni508.4)

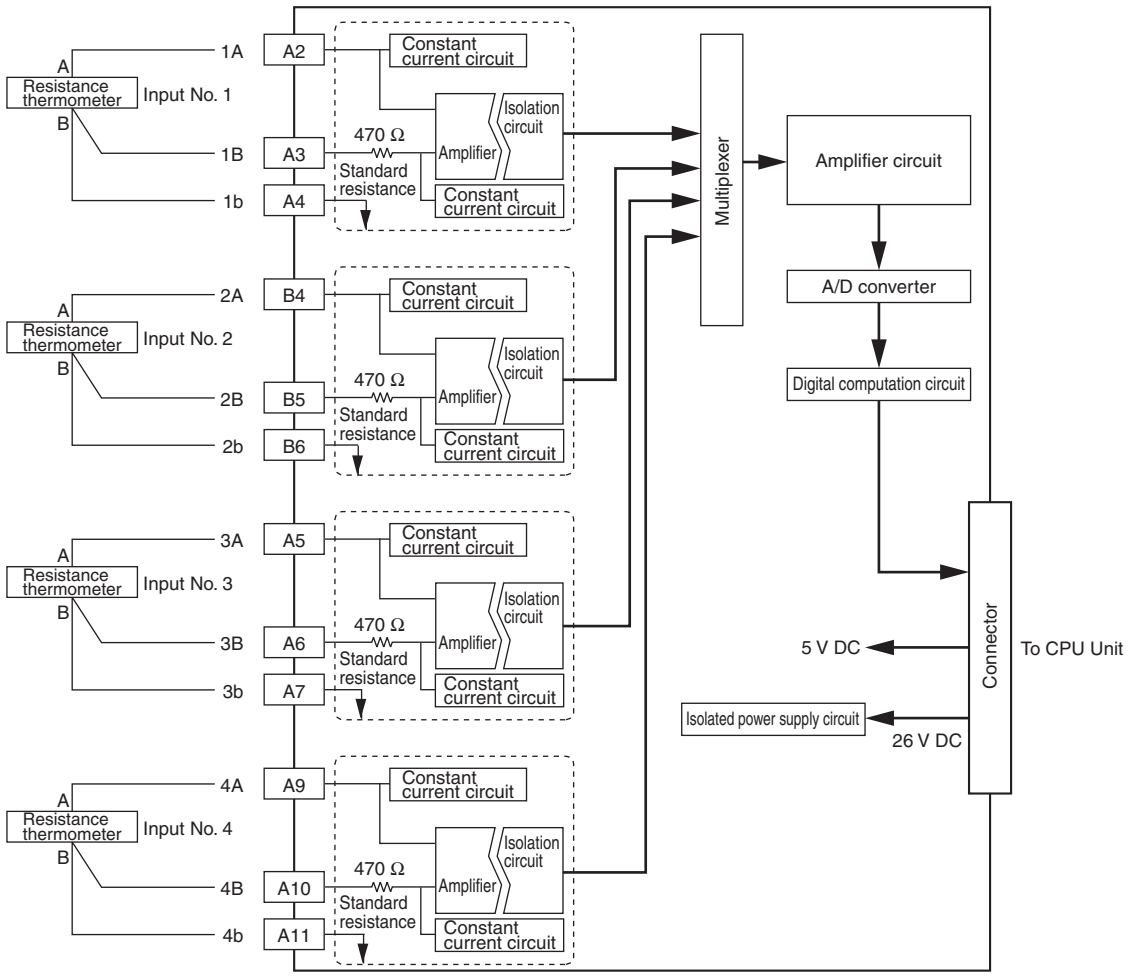

CS1W-PTS12 Isolated-type Resistance Thermometer Input Unit (Pt100, JPt100, Pt50, Ni508.4)

Overview

The CS1W-PTS12 Isolated-type Resistance Thermometer Input Unit provides four direct resistance thermometer inputs, and sends the data to the CPU Unit each cycle. All inputs are isolated.

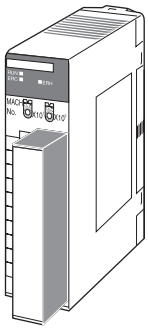

System Configuration

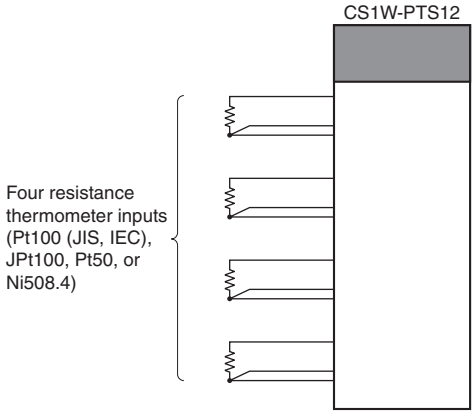

Specifications

Item		Specifications
Model		CS1W-PTS12
Applicable PLC		CS Series
Unit type		CS-series Special I/O Unit
Mounting position		CS-series CPU Rack or CS-series Expansion Rack (Cannot be mounted to C200H Expansion I/O Rack or SYSMAC BUS Remote I/O Slave Rack.)
Maximum number of Units		80 (within the allowable current consumption and power consumption range)
Unit numbers		00 to 95 (Cannot duplicate Special I/O Unit numbers.)
Areas for data exchange with CPU Unit	**Special I/O Unit Area**	10 words/Unit Resistance Thermometer Input Unit to CPU Unit: All process values, process value alarms (LL, L, H, HH), rate-of-change values, rate-of-change alarms (L, H), disconnection alarms, adjustment period end/notices.
	DM Area words allocated to Special I/O Units	100 words/Unit CPU Unit to Resistance Thermometer Input Unit: Temperature sensor type, input range (user set), scaling of process value data to be stored in allocated words in CIO area, rate-of-change input range, scaling of rate-of-change data, number of items for moving average, process value alarm setting (LL, L, H, HH), rate-of-change alarm setting (L, H), zero/span adjustment value.
	Expansion Control/ Monitor Area words	35 words/Unit CPU Unit to Resistance Thermometer Input Unit: Hold function selection start/reset, adjustment period control, control bits Resistance Thermometer Input Unit to CPU Unit: Adjustment period warnings/notices, peak and bottom values, top and valley values
	Expansion Setting Area words	46 words/Unit CPU Unit to Resistance Thermometer Input Unit: Expansion Setting Area settings, adjustment period control, peak and bottom detection, top and valley detection
Number of temperature sensor inputs		4
Temperature sensor type		Pt100 (JIS, IEC), JPt100, Pt50, Ni508.4 Sensor type, input range, and scaling to industrial units are separate for each of the 4 inputs.
Scaling		Data to be stored in the allocated words in the CIO area must be scaled (with the minimum and maximum values set by user) (4 inputs set separately.). Data can be stored at 0% to 100%.
Data storage in the CIO Area		The value derived from carrying out the following processing in order of the actual process data in the input range is stored in four digits hexadecimal (binary values) in the allocated words in the CIO Area. 1) Mean value processing → 2) Scaling → 3) Zero/span adjustment → 4) Output limits
Accuracy (25°C)		The greater of the following: ±0.05% or ±0.1°C

Item		Specifications
Temperature coefficient		Pt100: 0.009%/°C JPt100: 0.01%/°C Pt50: 0.02%/°C Ni508.4: 0.012%/°C
Resolution		1/64,000
Sensing method		3-wire method
Allowable lead wire resistance		20 Ω max. per wire
Input detection current		0.5 mA
Warmup time		10 min
Response time		100 ms (travel time from input 0% to 90%, for step input and with moving average for 4 samples)
Conversion period		20 ms/4 inputs or 10 ms/2 inputs, selectable in DM Area words allocated to Unit as a Special I/O Unit.
Maximum time to store data in CPU Unit		Conversion period + one CPU Unit cycle
Disconnection detection		Detects disconnections at each input and turns ON the Disconnection Detection Flag. Hardware detection time: Approx. 0.5 s max. The process value overrange direction for when a disconnection occurs can be specified. (High: 115% of set input range; low: –15% of set input range)
Function	**Mean value processing (input filter)**	Calculates the moving average for the specified number of process values (1 to 128), and stores that value in the CIO Area as the process value.
	Process value alarm	Process value 4-point alarm (HH, H, LL, L), alarm hysteresis, and ON-delay timer (0 to 60 s are available).
	Rate-of-change calculation	Calculates the amount of change per comparison time interval (1 to 16 s).
	Rate-of-change alarm	Rate-of-change 2-point alarm (H, L), alarm hysteresis, and ON-delay timer (0 to 60 s are available, shared with process value alarm).
	Adjustment period control	When zero/span adjustment is executed, the date is internally recorded at the Unit. When the preset zero/span adjustment period and the notice of days remaining have elapsed, this function turns ON a warning flag to give notice that it is time for readjustment.
	Peak and bottom detection	Detects the maximum (peak) and minimum (bottom) analog input values, from when the Hold Start Bit (output) allocated to the Expansion Control/Monitor Area turns ON until it turns OFF. These values are stored as the peak and bottom values in the Expansion Control/Monitor Area.
	Top and valley detection	This function detects the top and valley values for analog inputs, from when the Hold Start Bit (output) allocated to the Expansion Control/Monitor Area turns ON until it turns OFF. These values are stored as the top and valley values in the Expansion Control/Monitor Area.
Isolation		Between temperature inputs and between input terminals and PLC signals: Power supply isolated by transformers, signals isolated by photocouplers.
Insulation resistance		20 MΩ (at 500 V DC) between inputs
Dielectric strength		Between inputs: 1,000 V AC, at 50/60 Hz, for 1 min, leakage current 10 mA max.
External connections		Terminal block (detachable)
Unit number settings		Set by rotary switches on front panel, from 0 to 95.
Indicators		Three LED indicators on front panel (for normal operation, errors detected at the Resistance Thermometer Input Unit, and errors detected at the CPU Unit).
Front panel connector		Sensor input connector terminal block (detachable)
Effect on CPU Unit cycle time		0.3 ms
Current consumption		5 V DC at 120 mA max., 26 V DC at 70 mA max.
Dimensions		35 × 130 × 126 mm (W × H × D) **Note:** The height including the Backplane is 145 mm.
Weight		450 g max.
Standard accessories		None

Sensor Type and Input Range

The resistance thermometer type and input range are set in the allocated words in the DM Area for every four inputs. The input range can be set anywhere within the measurable input ranges shown in the following table. Accuracy and resolution, however, are not determined from the set input range, but rather from the measurable input range shown in the following table. Therefore, accuracy and resolution do not change even when a narrow input range is set.

Sensor type	DM Area setting	Measurable input range
Pt100	0	–200 to 850°C
JPt100	1	–200 to 500°C
Pt50	2	–200 to 649°C
Ni508.4	3	–50 to 150°C

Terminal Connection Diagram

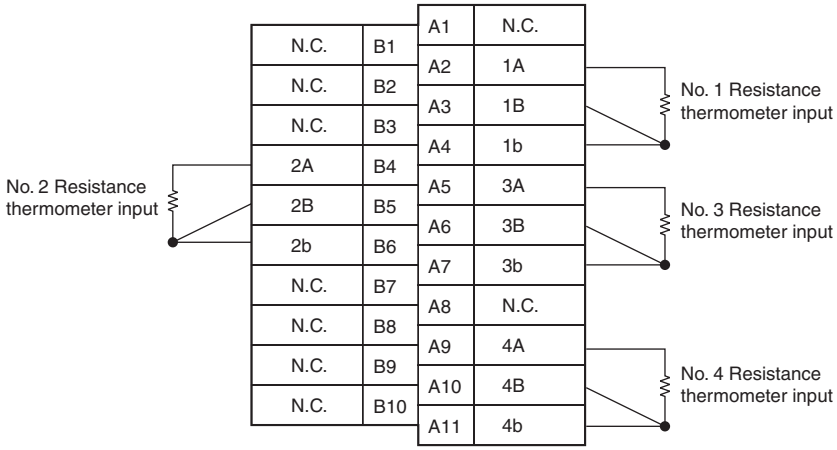

Note:
- Wire the same length to A, B, and b, so that the impedance will be the same. In particular, do not short circuit between B and b at the terminal block.
- For unused input terminals, short-circuit between A-B and B-b (e.g., A2-A3 and A3-A4 for input No. 1) of the resistance thermometer inputs with the lead wire.
- Always ground the GR terminal on the Power Supply Unit of the PLC.
- If the input device uses a voltage generator, temperature compensator, or similar device, then ground the input device if it has a ground terminal.

Terminal Block Diagram

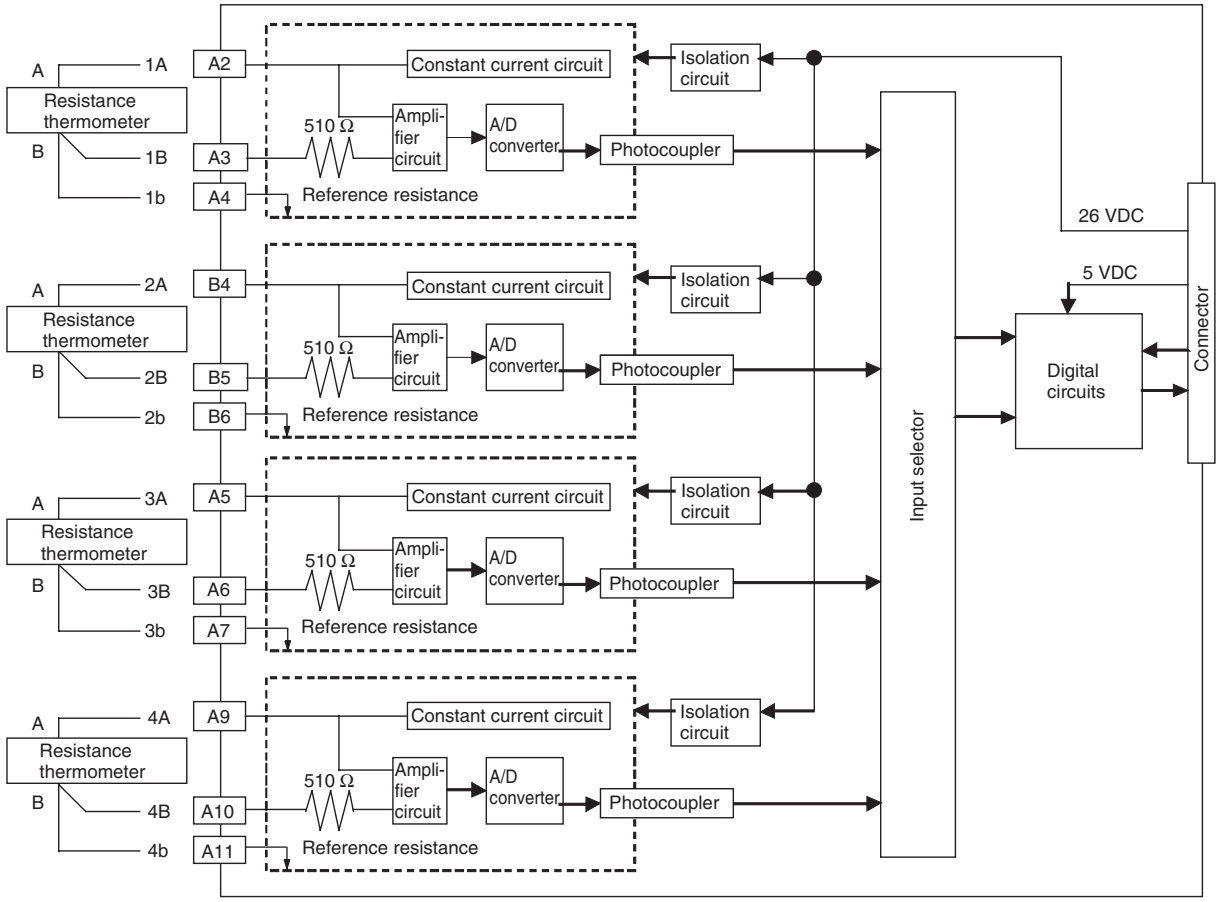

CS1W-PTS52 Isolated-type Resistance Thermometer Input Unit (Pt100, JPt100)

Overview

The CS1W-PTS52 Isolated-type Resistance Thermometer Input Unit provides four direct platinum resistance thermometer inputs, and sends the data to the CPU Unit each cycle. All inputs are isolated.

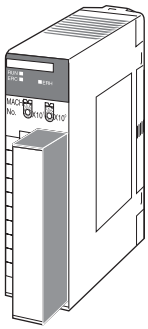

System Configuration

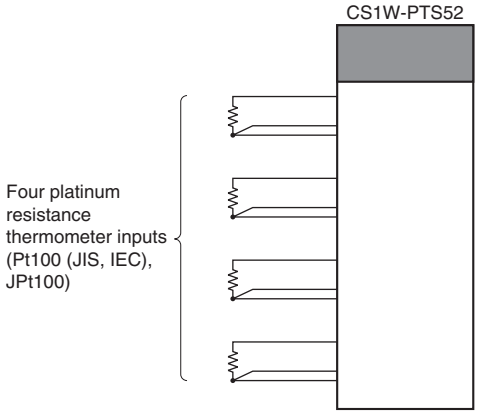

Specifications

Item		Specifications
Model		CS1W-PTS52
Applicable PLC		CS Series
Unit type		CS-series Special I/O Unit
Mounting position		CS-series CPU Rack or CS-series Expansion Rack (Cannot be mounted to C200H Expansion I/O Rack or SYSMAC BUS Remote I/O Slave Rack.)
Maximum number of Units		80 (within the allowable current consumption and power consumption range)
Unit numbers		00 to 95 (Cannot duplicate Special I/O Unit numbers.)
Areas for data exchange with CPU Unit	**Special I/O Unit Area**	10 words/Unit Resistance Thermometer Input Unit to CPU Unit: All process values, process value alarms (L, H), conversion data enabled flag, sensor errors.
	DM Area words allocated to Special I/O Units	100 words/Unit CPU Unit to Resistance Thermometer Input Unit: Temperature sensor type, input range (user set), process value alarm setting (L, H), zero/span adjustment value.
Number of temperature sensor inputs		4
Temperature sensor type		Pt100 (JIS, IEC), JPt100 The same sensor type, input range, and scaling to industrial units are used by all inputs.
Data storage in the CIO Area		The actual process data in the input range is stored in four digits hexadecimal (binary or BCD values) in the allocated words in the CIO Area.
Accuracy (25°C)		±0.3% of PV or ±0.8°C, whichever is greater, ±1 digit max. (±0.3% of PV or ±1.6°F, whichever is greater, ±1 digit max.) PV: Process value data
Temperature characteristics		Refer to *Temperature Characteristics According to Platinum Resistance Thermometer Type* on page 37.
Sensing method		3-wire method
Input detection current		1 mA
Influence of conductor resistance		0.4°C/Ω max.
Conversion period		250 ms/4 inputs
Warmup time		10 min
Maximum time to store data in CPU Unit		Conversion period + one CPU Unit cycle
Sensor error detection		Detects sensor error at each input and turns ON the Sensor error Flag. Hardware detection time: Approx. 0.5 s max. The process value overrange direction for when a sensor error occurs can be specified. (High: +20 digit of set input range; low: −20 digit of set input range)

Item		Specifications
Function	**Process value alarm**	Process value 2-point alarm (H, L), alarm hysteresis, and ON-delay timer (0 to 60 s are available).
	External alarm outputs	NPN outputs (with short-circuit protection) External power supply voltage: 20.4 to 26.4 V DC Max. switching capacity: 100 mA (for one output) Leakage current: 0.3 mA max. Residual voltage: 3 V max.
Isolation		Between inputs and PLC signal: Transformer for power supply and photocoupler for signals Between each input: Transformer for power supply and photocoupler for signals
Insulation resistance		20 MΩ max. (at 500 V DC). Between all output and NC terminals and external AC terminals (Power Supply Unit) Between all input terminals and external AC terminals (Power Supply Unit) Between all input terminals and all output terminals Between all external DC terminals (input, output, and NC terminals) and FG plate Between all input and output terminals and all NC terminals
Dielectric strength		Between all output and NC terminals and external AC terminals (Power Supply Unit) 2,000 V AC, 50/60 Hz 1 min., detection current: 1 mA Between all input terminals and external AC terminals (Power Supply Unit) Between all input terminals and all output terminals Between all external DC terminals (input, output, and NC terminals) and FG plate 1,000 V AC, 50/60 Hz 1 min., detection current: 1 mA Between all channels 500 VAC, 50/60 Hz 1 min., detection current: 1 mA
External connections		Terminal block (detachable)
Unit number settings		Set by rotary switches on front panel, from 0 to 95.
Indicators		Seven LED indicators on front panel (for normal operation, errors detected at the Unit, errors detected at the CPU Unit, and four indicators for external alarm outputs.)
Effect on CPU Unit cycle time		0.4 ms
Current consumption		5 V DC at 250 mA max
Dimensions		35 × 130 × 126 mm (W × H × D) **Note:** The height including the Backplane is 145 mm.
Weight		450 g max.

Sensor Type and Input Range

The Platinum Resistance Thermometer type and input range are set in the allocated words in the DM Area for every four inputs.
The measurable data range is ±20 digits wider than the sensor input range.

Setting	Input	°C			°F		
		16-bit binary	BCD		16-bit binary	BCD	
			F□□□ indicates minus sign.	Leftmost bit indicates minus sign.		Leftmost 4 bits (bits 12 to 15) indicate minus sign.	Leftmost bit (bit 15) indicates minus sign.
0	Pt100: −200.0 to 650.0°C (−300.0 to 1200.0°F)	F830 to FFFF to 1964 (−200.0 to −0.1 to 650.0)	F999 to 6500 (See note 2.) (−99.9 to 650.0)	A000 to 6500 (−200.0 to 650.0)	F448 to FFFF to 2EE0 (−300.0 to −0.1 to 1200.0)	F999 to 9999 (See note 2.) (−99.9 to 999.9)	B000 to 7999 (See note 2.) (−300.0 to 799.9)
1	JPt100: −200.0 to 650.0°C (−300.0 to 1200.0°F)	F830 to FFFF to 1964 (−200.0 to −0.1 to 650.0)	F999 to 6500 (See note 2.) (−99.9 to 650.0)	A000 to 6500 (−200.0 to 650.0)	F448 to FFFF to 2EE0 (−300.0 to −0.1 to 1200.0)	F999 to 9999 (See note 2.) (−99.9 to 999.9)	B000 to 7999 (See note 2.) (−300.0 to 799.9)
2 to 9	Do not set.				Do not set.		

Note: 1. If the indication range is exceeded, a sensor error will occur and the sensor error bit will turn ON. The process value will be clamped at the lower or upper limit of the indication range, depending on the setting for data direction at sensor error.

2. The indicator range for BCD display will be clamped at the lower (or upper) limit in the region between the lower (or upper) limit of the setting range and the point where a sensor error occurs.
For 0.1°C/0.1°F indication with minus sign indicated by leftmost 4 bits (bits 12 to 15): Lower limit = −99.9, Upper limit = 999.9.
For 0.1°C/0.1°F indication with minus sign indicated by leftmost bit (bit 15): Lower limit = −799.9, Upper limit = 799.9.

Temperature Characteristics According to Platinum Resistance Thermometer Type

Platinum Resistance Thermometer	Temperature range	Set value error when ambient temperature changes by 1°C
Pt100	–200 to 200°C	±0.06°C
	200 to 650°C	285 ppm of PV
JPt100	–200 to 200°C	±0.06°C
	200 to 650°C	285 ppm of PV

The measured temperature error is calculated as shown in the following example.

Item	Details
Ambient temperature	30°C
Platinum Resistance Thermometer	Pt100
Measured temperature (PV)	500°C
Reference accuracy (25°C)	±0.3°C of PV or ±0.8°C, whichever is greater, ±1 digit. In this example, ±1.5°C.
Temperature characteristics	200 to 650°C: 285 ppm of PV. In this example, 285 ppm × 500°C = 0.143°C.
Change in ambient temperature	5°C (25 to 30°C)

Overall accuracy =
Reference accuracy + Temperature characteristic × Change in ambient temperature = ±1.5°C + ±0.143°C × 5 = Approx. ± 2.2°C ±1 digit.

Terminal Connection Diagram

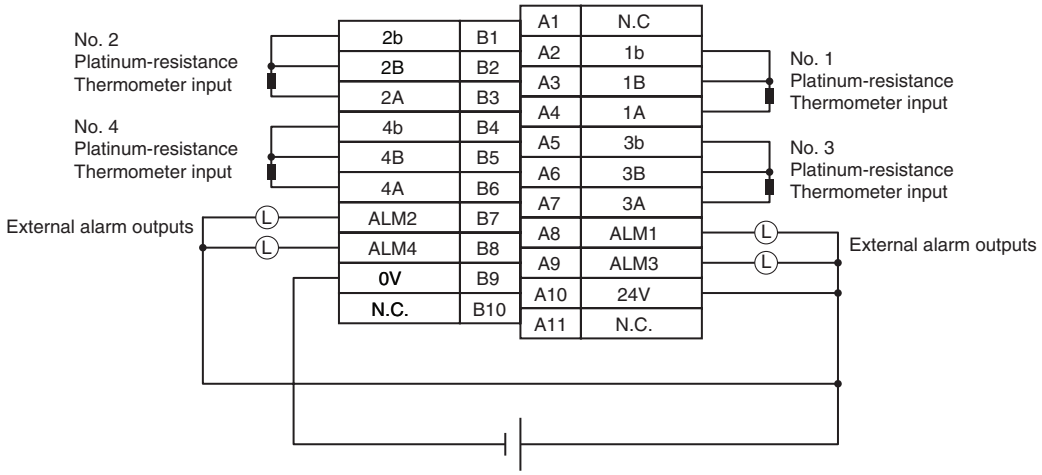

Note:
- Wire the same length to A, B, and b, so that the impedance will be the same. In particular, do not short circuit between B and b at the terminal block.
- For unused input terminals, connect approximately 100 Ω between the platinum-resistance thermometer input terminals A and B and short terminals B and b with a lead wire. If resistance is not connected between terminals A and B and terminals B and b are shorted or if terminals A and B and terminals B and b are left open, the alarm output will turn ON and the ALM indicator will light.
- Do not connect anything to NC terminals. Do not use NC terminals as relay terminals.
- Always ground the GR terminal on the Power Supply Unit of the PLC.
- If the input device uses a voltage generator, temperature compensator, or similar device, then ground the input device if it has a ground terminal.

Terminal Block Diagram

Input Circuit

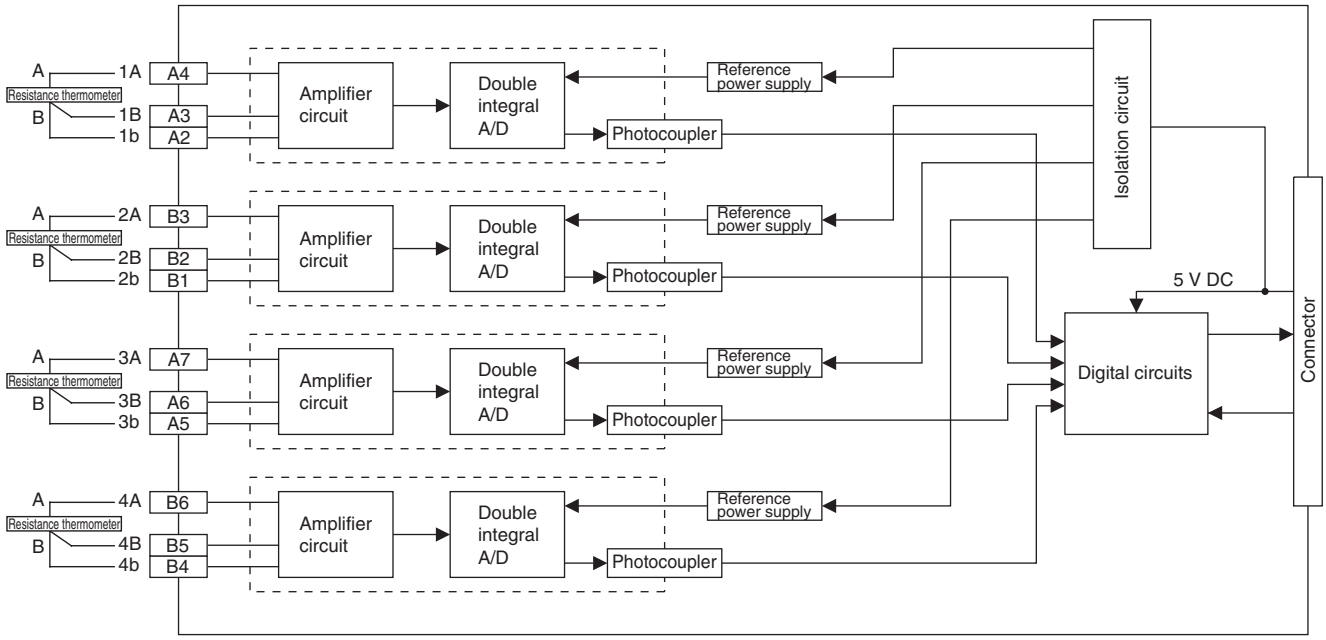

Output Circuit

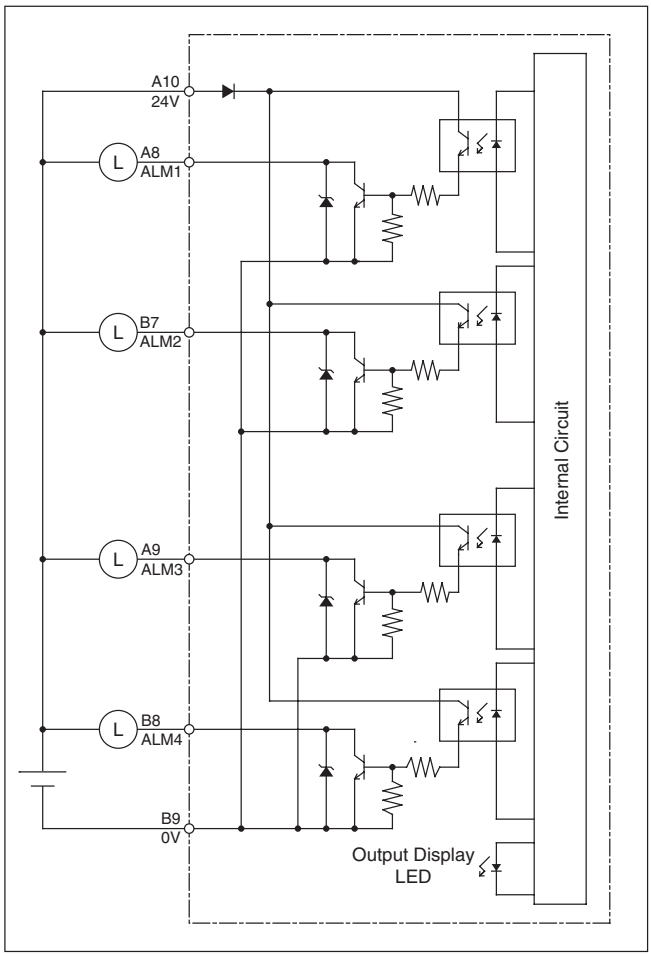

CS1W-PTS56 Isolated-type Resistance Thermometer Input Unit (Pt100, JPt100)

Overview

The CS1W-PTS56 Isolated-type Resistance Thermometer Input Unit provides 8 direct platinum resistance thermometer inputs, and sends the data to the CPU Unit each cycle. All inputs are isolated.

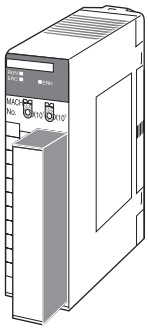

System Configuration

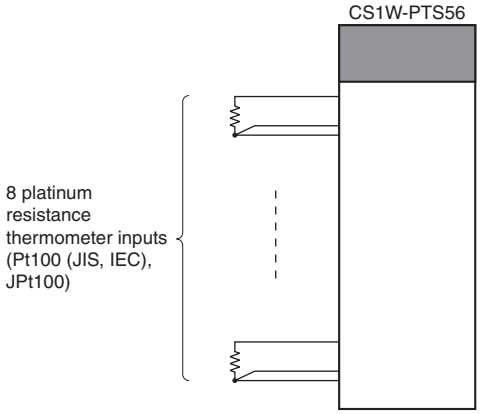

Specifications

Item		Specifications
Model		CS1W-PTS56
Applicable PLC		CS Series
Unit type		CS-series Special I/O Unit
Mounting position		CS-series CPU Rack or CS-series Expansion Rack (Cannot be mounted to C200H Expansion I/O Rack or SYSMAC BUS Remote I/O Slave Rack.)
Maximum number of Units		80 (within the allowable current consumption and power consumption range)
Unit numbers		00 to 95 (Cannot duplicate Special I/O Unit numbers.)
Areas for data exchange with CPU Unit	**Special I/O Unit Area**	10 words/Unit Resistance Thermometer Input Unit to CPU Unit: All process values, process value alarms (L, H), conversion data enabled flag, sensor errors.
	DM Area words allocated to Special I/O Units	100 words/Unit CPU Unit to Resistance Thermometer Input Unit: Temperature sensor type, input range (user set), process value alarm setting (L, H), zero/span adjustment value.
	Expansion Setting Area	1 word/Unit CPU Unit to Resistance Thermometer Input Unit: Process Value Alarm
Number of temperature sensor inputs		8
Temperature sensor type		Pt100 (JIS, IEC), JPt100 The same sensor type, input range, and scaling to industrial units are used by all inputs.
Data storage in the CIO Area		The actual process data in the input range is stored in four digits hexadecimal (binary or BCD values) in the allocated words in the CIO Area.
Accuracy (25°C)		±0.3% of PV or ±0.8°C, whichever is greater, ±1 digit max. (±0.3% of PV or ±1.6°F, whichever is greater, ±1 digit max.) PV: Process value data
Temperature characteristics		Refer to *Temperature Characteristics According to Platinum Resistance Thermometer Type* on page 41.
Sensing method		3-wire method
Influence of conductor resistance		0.4°C/Ω max.
Input detection current		0.5 mA
Warmup time		10 min
Conversion period		250 ms/8 inputs
Maximum time to store data in CPU Unit		Conversion period + one CPU Unit cycle

Item		Specifications
Sensor error detection		Detects sensor error at each input and turns ON the Sensor error Flag. Hardware detection time: Approx. 0.5 s max. The process value overrange direction for when a sensor error occurs can be specified. (High: +20 digit of set input range; low: –20 digit of set input range)
Function	**Process value alarm**	Process value 2-point alarm (H, L), alarm hysteresis, and ON-delay timer (0 to 60 s are available). Two alarms per input (H, L) can be output to addresses in the CIO Area specified in the Expansion Setting Area.
Isolation		Between inputs and PLC signal: Transformer for power supply and photocoupler for signals Between each input: Transformer for power supply and photocoupler for signals
Insulation resistance		20 MΩ max. (at 500 V DC). Between all input terminals and external AC terminals (Power Supply Unit) Between all input terminals and FG plate
Dielectric strength		Between all input terminals and external AC terminals (Power Supply Unit) Between all input terminals and FG plate 1,000 V AC, 50/60 Hz 1 min., detection current: 1 mA Between all channels 500 VAC, 50/60 Hz 1 min., detection current: 1 mA
External connections		Terminal block (detachable)
Unit number settings		Set by rotary switches on front panel, from 0 to 95.
Indicators		Three LED indicators on front panel (for normal operation, errors detected at the Unit, errors detected at the CPU Unit)
Effect on CPU Unit cycle time		0.4 ms
Current consumption		5 V DC at 180 mA max. 26 V DC at 60 mA max.
Dimensions		35 × 130 × 126 mm (W × H × D) **Note:** The height including the Backplane is 145 mm.
Weight		450 g max.

Sensor Type and Input Range

The Platinum Resistance Thermometer type and input range are set in the allocated words in the DM Area for every four inputs.
The measurable data range is ±20 digits wider than the sensor input range.

Set-ting	Input	°C			°F		
		16-bit binary	BCD		16-bit binary	BCD	
			F□□□ indicates minus sign.	Leftmost bit indicates minus sign.		Leftmost 4 bits (bits 12 to 15) indicate minus sign.	Leftmost bit (bit 15) indicates minus sign.
0	Pt100: –200.0 to 650.0°C (–300.0 to 1200.0°F)	F830 to FFFF to 1964 (–200.0 to –0.1 to 650.0)	F999 to 6500 (See note 2.) (–99.9 to 650.0)	A000 to 6500 (–200.0 to 650.0)	F448 to FFFF to 2EE0 (–300.0 to –0.1 to 1200.0)	F999 to 9999 (See note 2.) (–99.9 to 999.9)	B000 to 7999 (See note 2.) (–300.0 to 799.9)
1	JPt100: –200.0 to 650.0°C (–300.0 to 1200.0°F)	F830 to FFFF to 1964 (–200.0 to –0.1 to 650.0)	F999 to 6500 (See note 2.) (–99.9 to 650.0)	A000 to 6500 (–200.0 to 650.0)	F448 to FFFF to 2EE0 (–300.0 to –0.1 to 1200.0)	F999 to 9999 (See note 2.) (–99.9 to 999.9)	B000 to 7999 (See note 2.) (–300.0 to 799.9)
2 to 9	Do not set.				Do not set.		

Note: 1. If the indication range is exceeded, a sensor error will occur and the sensor error bit will turn ON. The process value will be clamped at the lower or upper limit of the indication range, depending on the setting for data direction at sensor error.

2. The indicator range for BCD display will be clamped at the lower (or upper) limit in the region between the lower (or upper) limit of the setting range and the point where a sensor error occurs.
For 0.1°C/0.1°F indication with minus sign indicated by leftmost 4 bits (bits 12 to 15): Lower limit = –99.9, Upper limit = 999.9.
For 0.1°C/0.1°F indication with minus sign indicated by leftmost bit (bit 15): Lower limit = –799.9, Upper limit = 799.9.

Temperature Characteristics According to Platinum Resistance Thermometer Type

Platinum Resistance Thermometer	Temperature range	Set value error when ambient temperature changes by 1°C
Pt100	–200 to 200°C	±0.06°C
	200 to 650°C	285 ppm of PV
JPt100	–200 to 200°C	±0.06°C
	200 to 650°C	285 ppm of PV

The measured temperature error is calculated as shown in the following example.

Item	Details
Ambient temperature	30°C
Platinum Resistance Thermometer	Pt100
Measured temperature (PV)	500°C
Reference accuracy (25°C)	±0.3°C of PV or ±0.8°C, whichever is greater, ±1 digit. In this example, ±1.5°C.
Temperature characteristics	200 to 650°C: 285 ppm of PV. In this example, 285 ppm × 500°C = 0.143°C.
Change in ambient temperature	5°C (25 to 30°C)

Overall accuracy =
Reference accuracy + Temperature characteristic × Change in ambient temperature = ±1.5°C + ±0.143°C × 5 = Approx. ± 2.2°C ±1 digit.

Terminal Connection Diagram

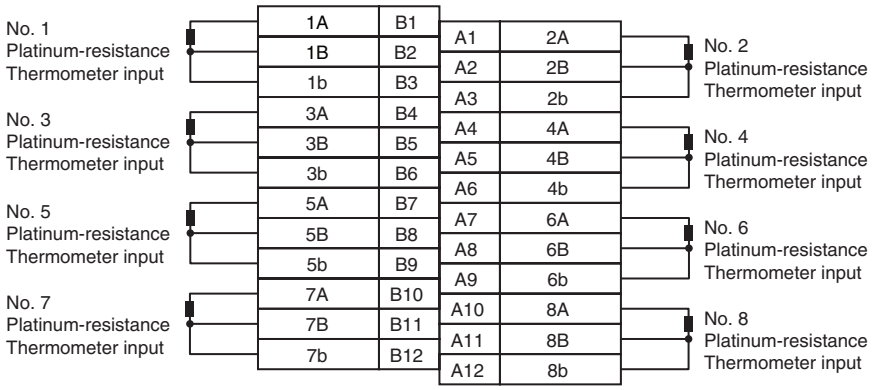

Note:
- Wire the same length to A, B, and b, so that the impedance will be the same. In particular, do not short circuit between B and b at the terminal block.
- Set the *Sensor type* in Setting Group 2 in the DM Area to "Not used" for any thermocouple inputs that are not used.
- Always ground the GR terminal on the Power Supply Unit of the PLC.
- If the input device uses a voltage generator, temperature compensator, or similar device, then ground the input device if it has a ground terminal.

Terminal Block Diagram

Input Circuit

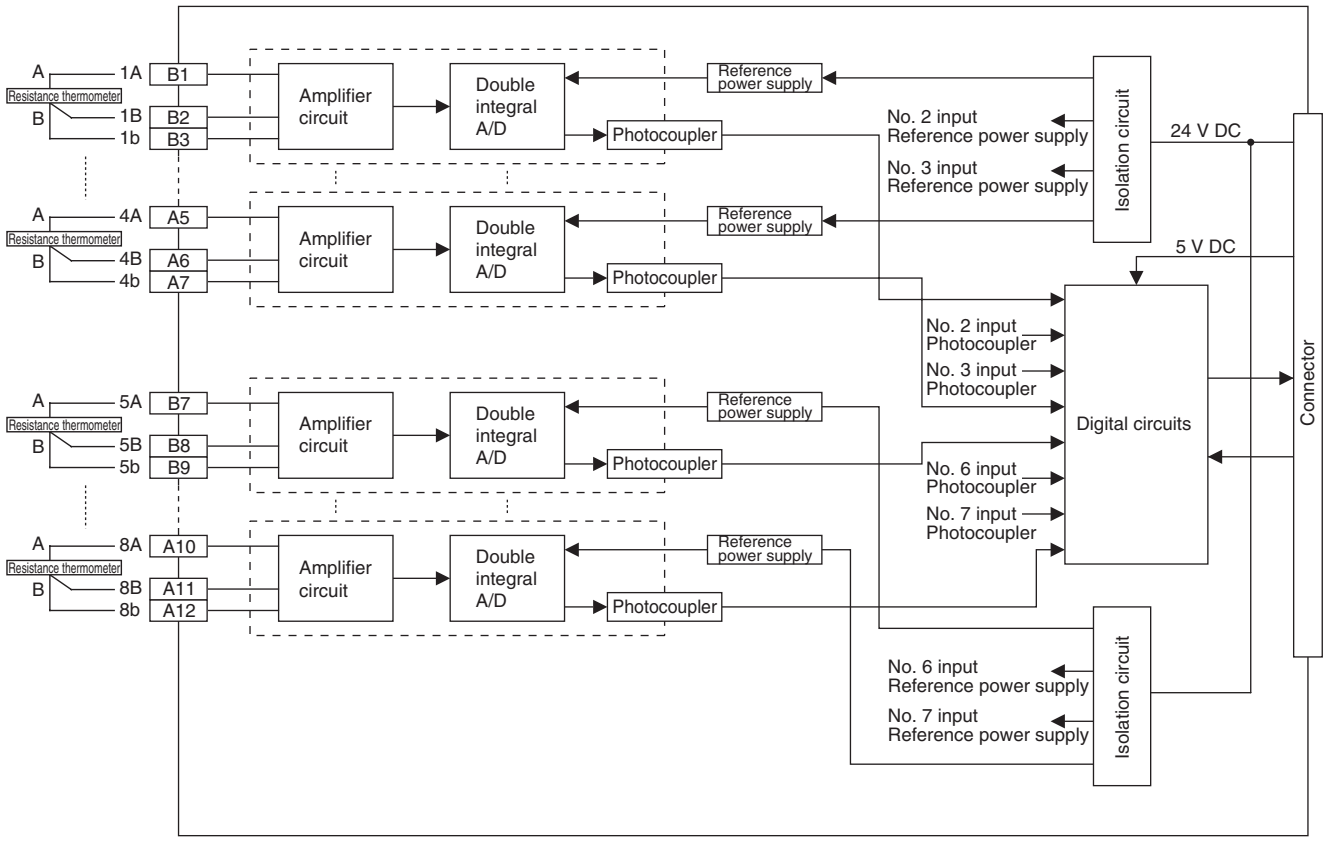

CS1W-PDC01 Isolated-type Direct Current Input Unit

Overview

The CS1W-PDC01 Isolated-type Direct Current Input Unit provides four DC signal inputs, and sends the data to the CPU Unit each cycle. All inputs are isolated.

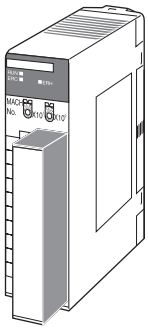

System Configuration

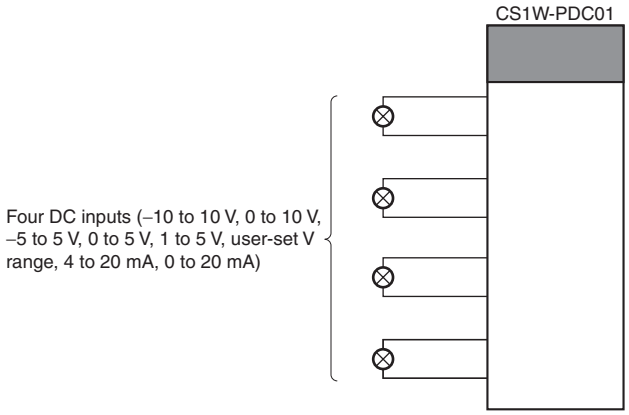

Specifications

Item		Specifications	
Model		CS1W-PDC01	
Applicable PLC		CS-series	
Unit type		CS-series Special I/O Unit	
Mounting position		CS-series CPU Rack or CS-series Expansion Rack (Cannot be mounted to C200H Expansion I/O Rack or SYSMAC BUS Remote I/O Slave Rack.)	
Maximum number of Units		80 (within the allowable current consumption and power consumption range)	
Unit numbers		00 to 95 (Cannot duplicate Special I/O Unit numbers.)	
Areas for data exchange with CPU Unit	**Special I/O Unit Area**	10 words/Unit Isolated-type Direct Current Input Unit to CPU Unit: All process values, process value alarms (LL, L, H, HH), rate-of-change values, rate-of-change alarms (L, H), input errors	
	DM Area words allocated to Special I/O Units	100 words/Unit CPU Unit to Isolated-type Direct Current Input Unit: Input signal type, scaling of process values in industrial units, square root function enable, rate-of-change value range, rate-of-change scaling, number of items for moving average, process value alarm setting (LL, L, H, HH), rate-of-change alarm setting (L, H), zero/span adjustment value, etc.	
Number of inputs		4	
Input signal type		4 to 20 mA, 0 to 20 mA, –10 to 10 V, 0 to 10 V, –5 to 5 V, 1 to 5 V, 0 to 5 V, or ±10-V user-set range. The ±10-V user-set range can be specified within –10.000 to 10.000 V.	Input signal type and scaling to industrial units are separate for each of the 4 inputs. **Note:** Input signal type and scaling to industrial units are set in the DM Area. Example: Input signal type: 4 to 20 mA; industrial unit scaling: 0 to 500 m^3/h (after square root extraction). DM Area settings are as follows: Input signal type: 5 (0005 hex) Industrial unit maximum value stored: 500 (01F4 hex) Industrial unit minimum value stored: 0 (0000 hex)
User-defined scaling in industrial units		Scaling required for the above input signals, such as 4 to 20 mA or 1 to 5 V. (Any minimum and maximum values can be set.) (4 inputs set separately.)	
Data storage in the CIO Area		The value derived from carrying out the following processing in order of the process value data is stored in four digits hexadecimal (binary values) in the allocated words in the CIO Area. 1) Mean value processing → 2) Scaling → 3) Zero/span adjustment → 4) Square root extraction → 5) Output limits	
Accuracy (25°C)		±0.1% of full scale For the ±10-V user-set range, however, as shown in the following equation, the accuracy depends on the ratio of the selected internal range (0 to 4) span to the user-set range span. $\text{Accuracy} = \pm 0.1\% \times \frac{\text{Internal range span}}{\text{User-set range span}}$	

Item		Specifications
Temperature coefficient		±0.015% /°C with respect to full scale. For the ±10-V user-set range, however: ±0.015% /°C with respect to the internal range.
Resolution		1/4,096 of full scale For the ±10-V user-set range, however, as shown in the following equation, the resolution depends on the ratio of the selected internal range (0 to 4) span to the user-set range span. $\text{Resolution} = \frac{1}{4096} \times \frac{\text{Internal range span}}{\text{User-set range span}}$
Input signal range		For inputs of 4 to 20 mA, 0 to 20 mA, 0 to 10 V, 1 to 5 V, 0 to 5 V: −15 to 115% For inputs of −10 to 10 V or −5 to 5 V: −7.5 to 107.5% For ±10-V user-set range: −7.5 to 107.5% of internal range
Input impedance		For current input: 250 Ω For voltage input: 1 MΩ min.
Warmup time		10 min
Response time		0.5 s (travel time from input 0% to 90%, for step input)
Conversion period		100 ms/4 inputs
Maximum time to store data in CPU Unit		Conversion period + one CPU Unit cycle
Input error detection		Checks are conducted for only 4 to 20 mA and 1 to 5 V. Error detected when under −17.2% (1.25 mA, 0.3125 V) or over 112.5% (22 mA, 5.5 V).
Operation at input disconnection		4 to 20 mA, 1 to 5 V: Process value of −15% stored. 0 to 20 mA, 0 to 5 V, 0 to 10 V, −10 to 10 V: The same value is stored as when 0 V or 0 mA is input.
Input disconnection overrange time		Approx. 1 s
Function	**Mean value processing (input filter)**	Calculates the moving average for the specified number of past process values (1 to 16), and stores that value in the CIO Area as the process value.
	Process value alarm	Process value 4-point alarm (HH, H, L, LL), hysteresis, and ON-delay timer (0 to 60 s) are available.
	Rate-of-change calculation	Calculates the amount of change per comparison time interval (1 to 16 s).
	Rate-of-change alarm	Rate-of-change 2-point alarm (H, L), alarm hysteresis (shared with process value alarm), and ON-delay timer (0 to 60 s, shared with process value alarm) are available.
	Square root	When the process value scaling maximum value is A and the minimum value is B: $\text{Output} = \sqrt{(A-B)\ (\text{Input}-B)} + B$ Dropout: Output approx. 7% maximum linear (output = input) characteristics **Note:** The square root function is only enabled when the maximum scaling value is greater than the minimum value. **Note:** When square root processing is being performed, set the maximum and minimum scaling values to the values required after square root processing of the current or other input values.
Isolation		Between analog inputs and between input terminals and PLC signals: Isolation by transformer
Insulation resistance		20 MΩ (at 500 V DC) between inputs
Dielectric strength		Between inputs: 1,000 V AC, at 50/60 Hz, for 1 min, leakage current 10 mA max.
External connections		Terminal block (detachable)
Unit number settings		Set by rotary switches on front panel, from 0 to 95.
Indicators		Three LED indicators on front panel (for normal operation, errors detected at the Direct Current Input Unit, and errors related to the CPU Unit).
Front panel connector		Sensor input connector terminal block (detachable)
Effect on CPU Unit cycle time		0.3 ms
Current consumption		5 V DC at 150 mA max., 26 V DC at 160 mA max.
Dimensions		35 × 130 × 126 mm (W × H × D) **Note:** The height including the Backplane is 145 mm.
Weight		450 g max.
Standard accessories		None

Accuracy and Resolution for ±10 V User-set Range

With the ±10-V user-set range, the input signal zero and span can be set anywhere within the range −10.000 to 10.000 V. Internally, however, inputs are processed in five progressive ranges (numbers 0 to 4), as shown in the following table.

Table 1: Internal Ranges

Internal range number	Measurable voltage	Internal range span
0	−10.000 to 10.000 V	20.000 V
1	−5.000 to 5.000 V	10.000 V
2	−2.500 to 2.500 V	5.000 V
3	−1.250 to 1.250 V	2.500 V
4	−0.625 to 0.625 V	1.250 V

Therefore, the accuracy and resolution of the set range span are determined by the ratio of the internal range (0 to 4) span to the set input range span. For the internal range, a larger number is selected when both the minimum and maximum values of the range fall within that next range. For example, suppose that the set input range is 0.000 to 3.000 V. Since both the minimum and maximum values fall within the limits for internal range No. 1 (−5.000 to 5.000 V), that range will be selected.

Terminal Connection Diagram

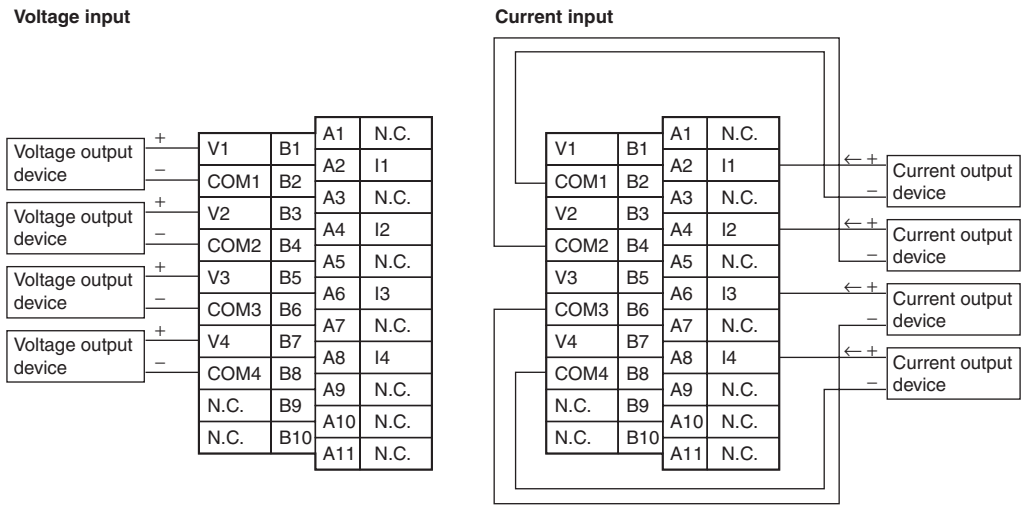

Note: In both of the above cases, leave all unused inputs open between the positive and negative terminals (e.g., between B1 and B2 for voltage input No. 1).

Terminal Block Diagram

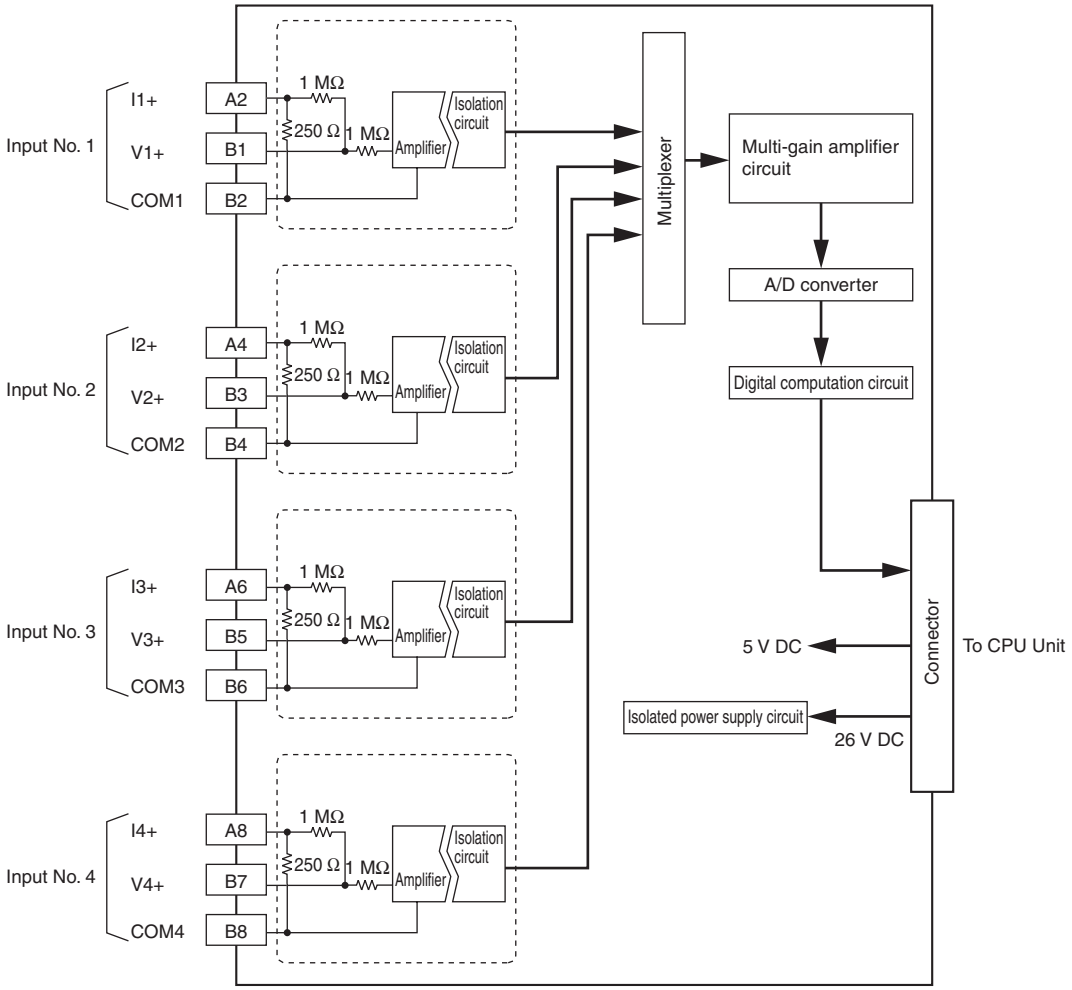

Current input

(n: Input Nos. 1 to 4)

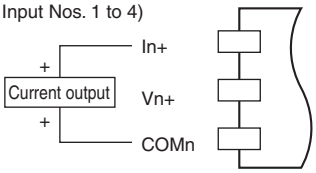

Voltage input

(n: Input Nos. 1 to 4)

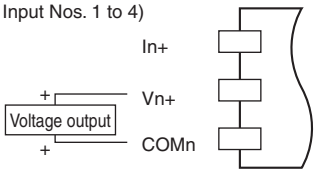

CS1W-PDC11 Isolated-type Direct Current Input Unit

Overview

The CS1W-PDC11 Isolated-type Direct Current Input Unit provides four direct-current inputs, and sends the data to the CPU Unit each cycle. All inputs are isolated.

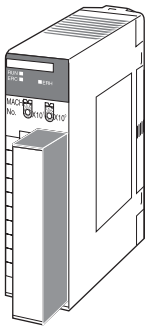

System Configuration

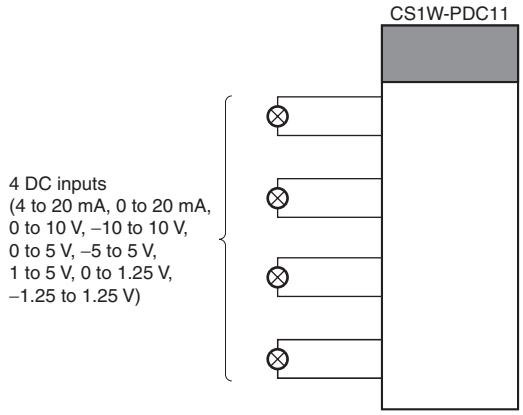

Specifications

Item		Specifications
Model		CS1W-PDC11
Applicable PLC		CS Series
Unit type		CS-series Special I/O Unit
Mounting position		CS-series CPU Rack or CS-series Expansion Rack (Cannot be mounted to C200H Expansion I/O Rack or SYSMAC BUS Remote I/O Slave Rack.)
Maximum number of Units		80 (within the allowable current consumption and power consumption range)
Unit numbers		00 to 95 (Cannot duplicate Special I/O Unit numbers.)
Areas for data exchange with CPU Unit	**Special I/O Unit Area**	10 words/Unit Isolated-type Direct Current Input Unit to CPU Unit: All process values, process value alarms (LL, L, H, HH), rate-of-change values, rate-of-change alarms (L, H), disconnection alarms, cold junction sensor errors, adjustment period end/notice
	DM Area words allocated to Special I/O Units	100 words/Unit CPU Unit to Isolated-type Direct Current Input Unit: Input signal type, scaling of process value in industrial units, process value alarm setting (L, H), inrush input upper limit, inrush input upper limit time, zero/span adjustment value, Square root function. Temperature input signal type, input range (user set), scaling of process value data to be stored in allocated words in CIO area, rate-of-change input range, scaling of rate-of-change data, number of items for moving average, process value alarm setting (LL, L, H, HH), rate-of-change alarm setting (L, H), zero/span adjustment value
	Expansion Control/ Monitor Area	35 words/Unit CPU Unit to Isolated-type Direct Current Input Unit: Bits for beginning or resetting the hold function selection, adjustment period control, control bits Isolated-type Direct Current Input Unit to CPU Unit: Adjustment period notices, peak and bottom values, top and valley values, integral values
	Expansion Setting Area	46 words/Unit CPU Unit to Isolated-type Direct Current Input Unit: Expansion Setting Area settings, adjustment period control, peak and bottom detection, top and valley detection, integral value calculation
Number of inputs		4
Input signal type		4 to 20 mA, 0 to 20 mA, 0 to 10 V, –10 to 10 V, 0 to 5 V, –5 to 5 V, 1 to 5 V, 0 to 1.25 V, –1.25 to 1.25 V (separate for each input), and ±10-V user-set range (specified range within –10.000 V to 10.000 V)
Scaling		Data to be stored in the allocated words in the CIO area must be scaled (Any minimum and maximum values can be set.) (4 inputs set separately.) Data can be converted at 0% to 100%.
Data storage in the CIO Area		The value derived from carrying out the following processing in order of the actual process data in the input range is stored in four digits hexadecimal (binary values) in the allocated words in the CIO Area. 1) Mean value processing → 2) Scaling → 3) Zero/span adjustment → 4) Square root calculation → 5) Output limits
Accuracy (25°C)		±0.05%

Item		Specifications
Temperature coefficient		±0.008%/°C
Resolution		1/64,000
Input signal range		For 4 to 20 mA, 0 to 20 mA, 0 to 10 V, 0 to 5 V, 1 to 5 V, 0 to 1.25 V inputs: −15 to 115% For −10 to 10 V, −5 to 5 V, −1.25 to 1.25 V inputs: −7.5 to 107.5%
Input impedance		For current inputs: 250 Ω (typical) For voltage inputs: 1 MΩ min.
Warmup time		10 min
Response time		100 ms (travel time from input 0% to 90%, for ±10 V step input and with moving average for 4 samples)
Conversion period		20 ms/4 inputs, 10 ms/2 inputs, selectable in words allocated to the Unit as a Special I/O Unit.
Maximum time to store data in CPU Unit		Conversion period + one CPU Unit cycle
Input error detection		Check only for 4 to 20 mA and 1 to 5 V. Error detected for −17.2% (1.25 mA, 0.3125 V) or less and 112.5% (22 mA, 5.5 V) or more.
Operation at input disconnection		For 4 to 20 mA and 1 to 5 V: Stores −15% process value. For all other ranges: Stores same process value as 0-V or 0-mA inputs.
Input disconnection detection delay time		Approx. 1 s.
Function	**Mean value processing (input filter)**	Calculates the moving average for the past specified number of process values (1 to 128 can be specified), and stores that value in the CIO Area as the process value.
	Process value alarm	Process value 4-point alarm (LL, L H, HH), hysteresis, and ON-delay timer (0 to 60 s) are available.
	Rate-of-change calculation	Calculates the amount of change per comparison time interval (1 to 16 s).
	Rate-of-change alarm	Rate-of-change 2-point alarm (H, L), alarm hysteresis, and ON-delay timer (0 to 60 s are available, shared with process value alarm).
	Square root calculation	When the maximum value for process value scaling is A and the minimum value is B, $\text{Output} = \sqrt{(A - B) \times (\text{input} - B)} + B$ Drop-out: Output approx. 7% max. linear (output = input) characteristic **Note: 1.** The square root function can only be used when the maximum scaling value is greater than the minimum scaling value. The square root will not be found if the maximum is smaller than the minimum. **2.** When the square root function is used, set the scaling values after square root calculation (e.g., for flow rates or other values) for the process value scaling A and B settings.
	Adjustment period control	When zero/span adjustment is executed, the date is internally recorded at the Unit. When the preset zero/span adjustment period and the notice of days remaining set in the Expansion Setting Area have elapsed, this function turns ON a warning flag to give notice that it is time for readjustment.
	Peak and bottom detection	Detects the maximum (peak) and minimum (bottom) analog input values, from when the Hold Start Bit (output) allocated to the Expansion Control/Monitor Area turns ON until it turns OFF. These values are stored as the peak and bottom values in the Expansion Control/Monitor Area.
	Top and valley detection	This function detects the top and valley values for analog inputs, from when the Hold Start Bit (output) allocated to the Expansion Control/Monitor Area turns ON until it turns OFF. These values are stored as the top and valley values in the Expansion Control/Monitor Area.
	Integral value calculation	This function calculates the analog input value's time integral. The integral value is calculated and output to the Expansion Control/Monitor Area when the Integral Value Calculation Start Bit in the Expansion Control/Monitor Area is turned ON.
Isolation		Between inputs and between inputs and PLC signals: Isolation by transformer and photocoupler.
Insulation resistance		20 MΩ (at 500 V DC) between all inputs
Dielectric strength		Between inputs: 1,000 V AC, at 50/60 Hz, for 1 min, leakage current 10 mA max.
External connections		Terminal block (detachable)
Unit number settings		Set by rotary switches on front panel, from 0 to 95.
Indicators		Three LED indicators on front panel (for normal operation, errors detected at the Direct Current Input Unit, and errors detected at the CPU Unit).
Front panel connector		Sensor input connector terminal block (detachable)
Effect on CPU Unit cycle time		0.3 ms
Current consumption		5 V DC at 120 mA max., 26 V DC at 120 mA max.
Dimensions		35 × 130 × 126 mm (W × H × D) **Note:** The height including the Backplane is 145 mm.
Weight		450 g max.
Standard accessories		Short bars (for current input)

Accuracy and Resolution in ±10-V User-set Range

The ±10-V user-set range allows the input signal's input range to be set to any range within −10.000 V to 10.000 V. Accuracy and resolution, however, are not determined by the input range, but rather by the measurable input range (−10.000 V to 10.000 V). Therefore, accuracy and resolution do not change even if a narrow input range is set.

Terminal Connection Diagram

Voltage Inputs

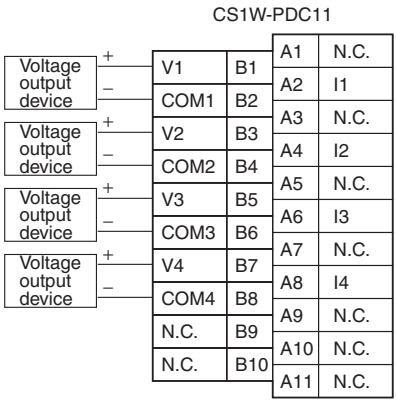

Current inputs

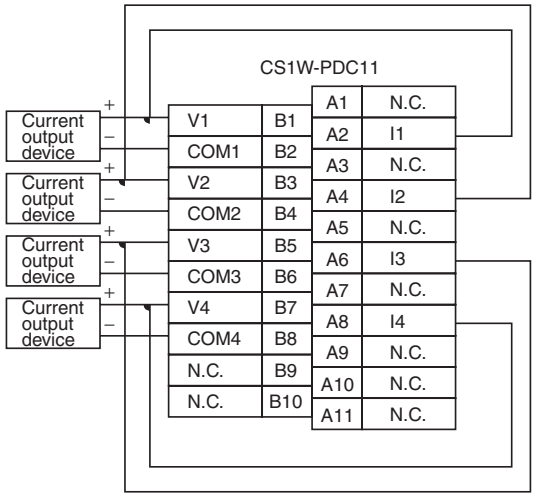

Note:
- In both of the above cases, leave all unused inputs open between the positive and negative terminals (e.g., between B1 and B2 for voltage input No. 1).
- Always ground the GR terminal on the Power Supply Unit of the PLC.
- If the input device uses a voltage generator, temperature compensator, or similar device, then ground the input device if it has a ground terminal.
- Always short-circuit the V and I terminals when using current input.
- Be sure to tighten the short bars to a torque of 0.5 N.m. Loose short bars may result in conversion errors.

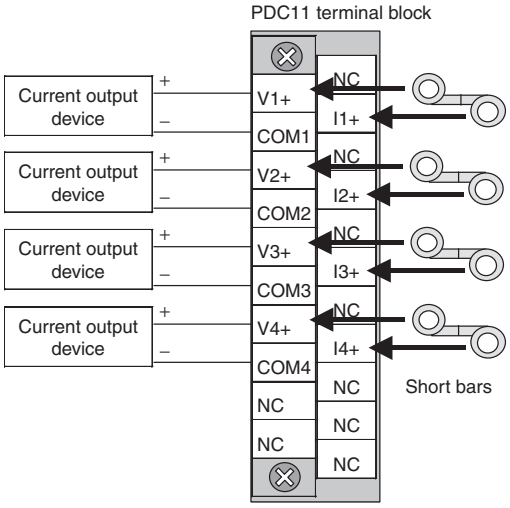

Terminal Block Diagram

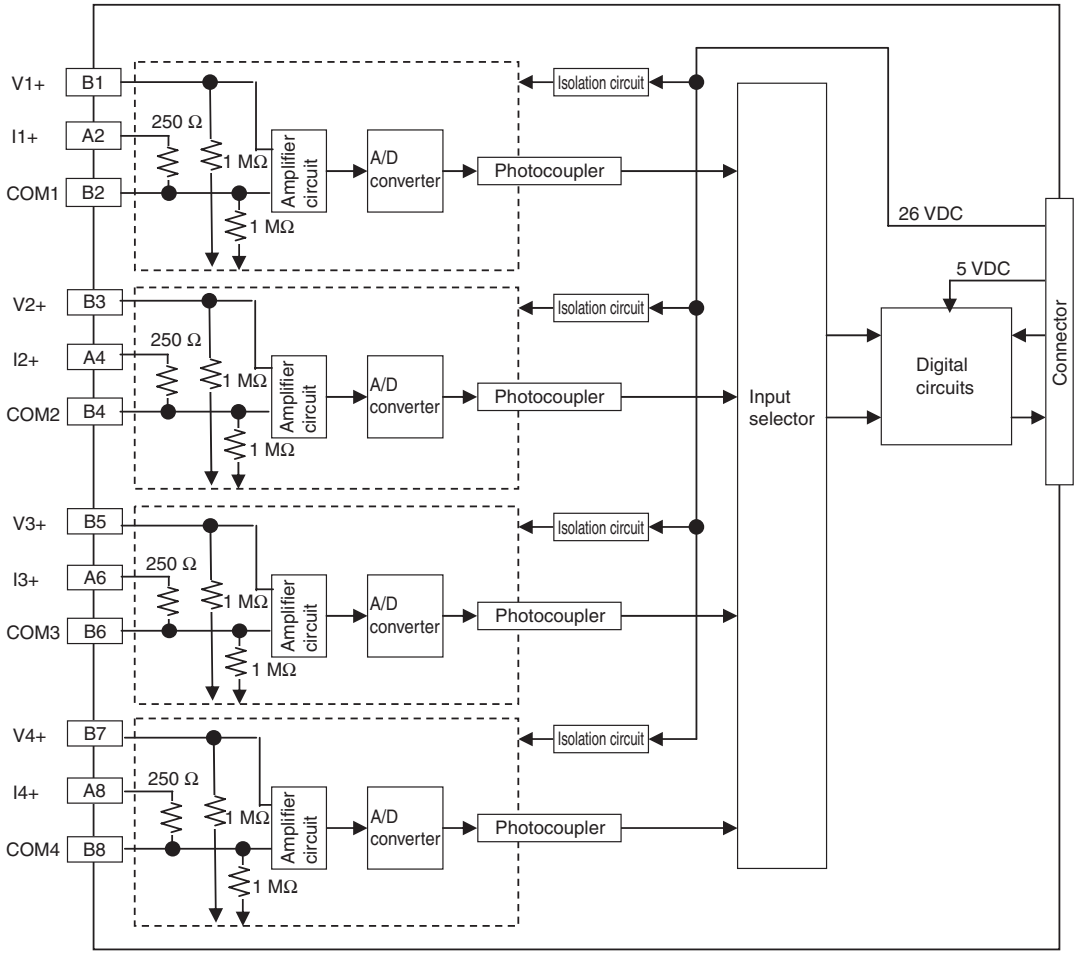

CS1W-PDC55 Isolated-type Direct Current Input Unit

Overview

The CS1W-PDC55 Isolated-type Direct Current Input Unit provides 8 direct-current inputs, and sends the data to the CPU Unit each cycle. All inputs are isolated.

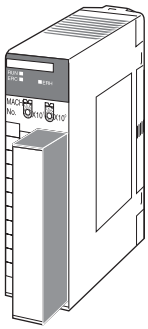

System Configuration

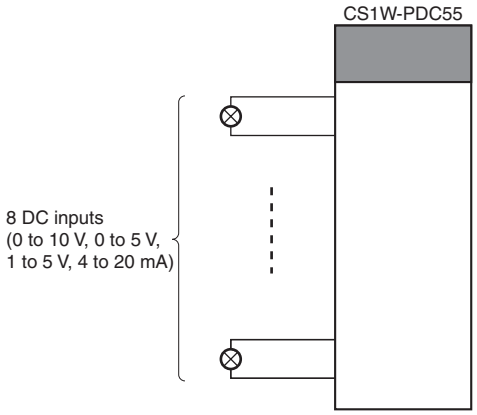

Specifications

Item		Specifications	
Model		CS1W-PDC55	
Applicable PLC		CS Series	
Unit type		CS-series Special I/O Unit	
Mounting position		CS-series CPU Rack or CS-series Expansion Rack (Cannot be mounted to C200H Expansion I/O Rack or SYSMAC BUS Remote I/O Slave Rack.)	
Maximum number of Units		80 (within the allowable current consumption and power consumption range)	
Unit numbers		00 to 95 (Cannot duplicate Special I/O Unit numbers.)	
Areas for data exchange with CPU Unit	**Special I/O Unit Area**	10 words/Unit Isolated-type Direct Current Input Unit to CPU Unit: All process values, process value alarms (L, H), conversion data enabled flags, input errors	
	DM Area words allocated to Special I/O Units	100 words/Unit CPU Unit to Isolated-type Direct Current Input Unit: Input signal type (separate for each input), process value alarm setting (L, H), zero/span adjustment value, Square root function.	
	Expansion Control/ Monitor Area	1 word/Unit CPU Unit to Isolated-type Direct Current Input Unit: Process value alarms	
Number of inputs		8	
Input signal type		0 to 10 V, 0 to 5 V, 1 to 5 V, 4 to 20 mA (separate for each input). (“Not used” can be selected).	Input signal type and scaling to industrial units are separate for each of the 8 inputs. **Note:** Input signal type and scaling to industrial units are set in the DM Area. Example: Input signal type: 4 to 20 mA; industrial unit scaling: 0 to 500 m^3/h (after square root extraction). DM Area settings are as follows: Input signal type: 3 (0003 hex) Industrial unit maximum value stored: 500 (01F4 hex) Industrial unit minimum value stored: 0 (0000 hex)
Scaling		Data to be stored in the allocated words in the CIO area must be scaled (Any minimum and maximum values can be set.) (8 inputs set separately.) Data can be converted at 0% to 100%.	
Data storage in the CIO Area		The value derived from carrying out the following processing in order of the actual process data in the input range is stored in four digits hexadecimal (binary values) in the allocated words in the CIO Area. 1) Scaling → 2) Zero/span adjustment → 3) Square root calculation → 4) Output limits	
Accuracy (25°C)		±0.3% of full scale	
Temperature Characteristics		For voltage inputs: 100 ppm/°C of full scale. For current inputs: 120 ppm/°C of full scale.	
Resolution		1/16,000 of full scale	
Input signal range		For all inputs: −5 to +105%	

Item		Specifications
Input impedance		For current inputs: 250 Ω (typical) For voltage inputs: 1 MΩ min.
Warmup time		10 min
Conversion period		250 ms/8 inputs
Maximum time to store data in CPU Unit		Conversion period + one CPU Unit cycle
Input error detection		Detects sensor error at each input and turns ON the Sensor error Flag. The process value overrange direction for when a sensor error occurs can be specified. (High: 105% of input range; low: –5% of input range)
Function	**Process value alarm**	Process value 8-point alarm (L H), hysteresis, and ON-delay timer (0 to 60 s) are available. Two alarms per input (L, H) can be output to addresses in the CIO Area specified in the Expansion Setting Area.
	Square root calculation (Supported only when input is 1 to 5 v or 4 to 20 mA.)	When the maximum value for process value scaling is A and the minimum value is B, $\text{Output} = \sqrt{(A - B) \times (\text{input} - B)} + B$ Drop-out: Output approx. 7% max. linear (output = input) characteristic **Note: 1.** The square root function can only be used when the maximum scaling value is greater than the minimum scaling value. The square root will not be found if the maximum is smaller than the minimum. **2.** When the square root function is used, set the scaling values after square root calculation (e.g., for flow rates or other values) for the process value scaling A and B settings.
Isolation		Between inputs and between inputs and PLC signals: Isolation by transformer and photocoupler.
Insulation resistance		20 MΩ max. (at 500 V DC). Between all input terminals and external AC terminals (Power Supply Unit) Between all input terminals and FG plate
Dielectric strength		Between all input terminals and external AC terminals (Power Supply Unit) Between all input terminals and FG plate 1,000 VAC, 50/60 Hz 1 min., detection current: 1 mA Between all channels 500 VAC, 50/60 Hz 1 min., detection current: 1 mA
External connections		Terminal block (detachable)
Unit number settings		Set by rotary switches on front panel, from 0 to 95.
Indicators		Three LED indicators on front panel (for normal operation, errors detected at the Direct Current Input Unit, and errors detected at the CPU Unit).
Front panel connector		Sensor input connector terminal block (detachable)
Effect on CPU Unit cycle time		0.4 ms
Current consumption		5 V DC at 180 mA max., 26 V DC at 60 mA max.
Dimensions		35 × 130 × 126 mm (W × H × D) **Note:** The height including the Backplane is 145 mm.
Weight		450 g max.

Terminal Connection Diagram

Voltage Inputs

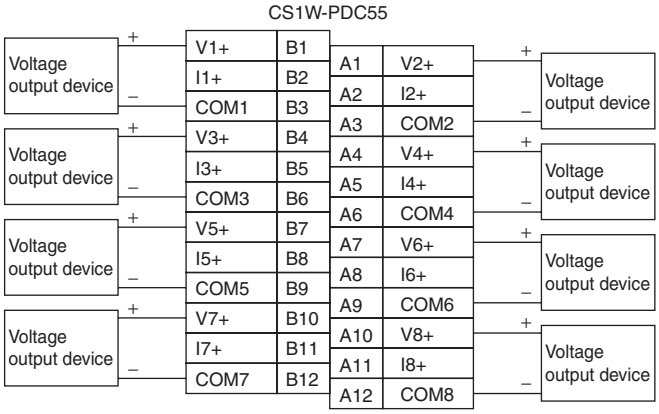

Current inputs

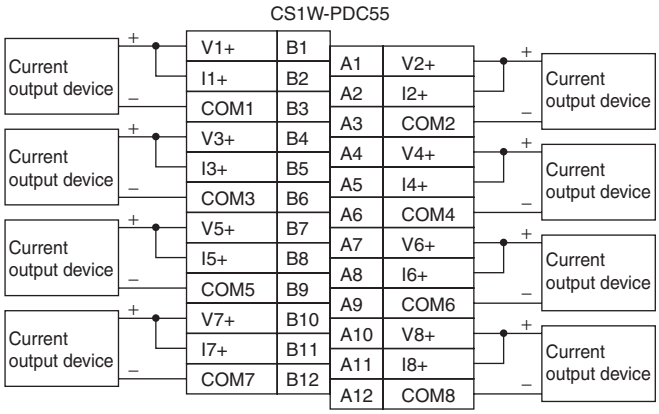

Note: • In both of the above cases, leave all unused inputs open between the positive and negative terminals.
• Always short-circuit the V and I terminals when using current input.

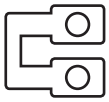

• Be sure to tighten the short bars to a torque of 0.5 N.m. Loose short bars may result in conversion errors.
• Always ground the GR terminal on the Power Supply Unit of the PLC.
• If the input device uses a voltage generator, temperature compensator, or similar device, then ground the input device if it has a ground terminal.

Terminal Block Diagram

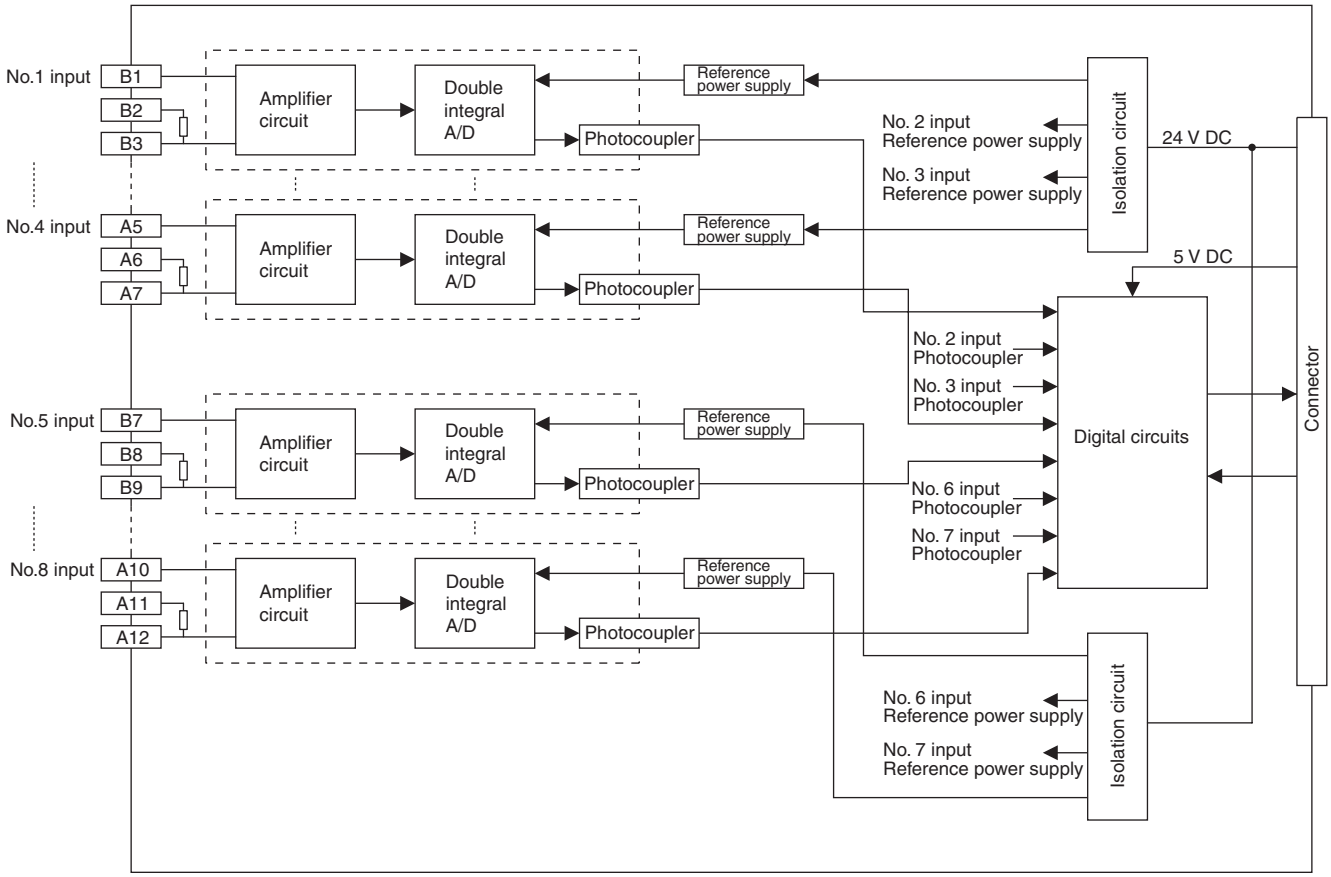

CS1W-PTW01 2-Wire Transmitter Input Unit

Overview

The CS1W-PTW01 2-Wire Transmitter Input Unit provides up to four inputs for unified signals (4 to 20 mA) from a transmitter, with no external DC power supply, and sends the data to the CPU Unit each cycle.

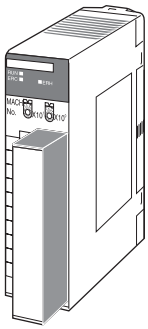

System Configuration

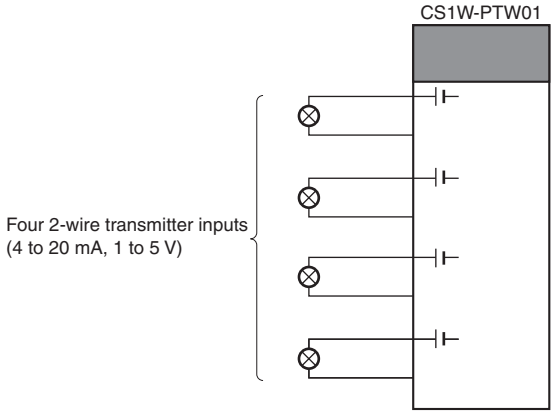

Specifications

Item		Specifications	
Model		CS1W-PTW01	
Applicable PLC		CS Series	
Unit type		CS-series Special I/O Unit	
Mounting position		CS-series CPU Rack or CS-series Expansion Rack (Cannot be mounted to C200H Expansion I/O Rack or SYSMAC BUS Remote I/O Slave Rack.)	
Maximum number of Units		80 (within the allowable current consumption and power consumption range)	
Unit numbers		00 to 95 (Cannot duplicate Special I/O Unit numbers.)	
Areas for data exchange with CPU Unit	**Special I/O Unit Area**	10 words/Unit 2-Wire Transmitter Input Unit to CPU Unit: All process values, process value alarms (LL, L, H, HH), rate-of-change values, rate-of-change alarms (L, H), input errors	
	DM Area words allocated to Special I/O Units	100 words/Unit CPU Unit to 2-Wire Transmitter Input Unit: Sensor type, scaling of process value data to be stored in allocated words in CIO area, square root function enable, rate-of-change value range, rate-of-change scaling, number of items for moving average, process value alarm setting (LL, L, H, HH), rate-of-change alarm setting (L, H), zero/span adjustment value, etc.	
Number of inputs		4	
Sensor type		Unified signal from transmitter (4 to 20 mA), 4 to 20 mA, 1 to 5 V	Sensor type and scaling to industrial units are separate for each of the 4 inputs. **Note:** Sensor type and scaling to industrial units are set in the DM Area. Example: Input signal type: 4 to 20 mA from 2-wire transmitter; industrial unit scaling: 0 to 500 m^3/h (after square root extraction). DM Area settings are as follows: Input signal type: 0 (0000 hex) Industrial unit maximum value stored: 500 (01F4 hex) Industrial unit minimum value stored: 0 (0000 hex)
User-defined scaling in industrial units		Scaling required for 4 to 20 mA or 1 to 5 V. (Any minimum and maximum values can be set.) (4 inputs set separately.)	
Data storage in the CIO Area		The value derived from carrying out the following processing in order of the process value data is stored in four digits hexadecimal (binary values) in the allocated words in the CIO Area. 1) Mean value processing → 2) Scaling → 3) Zero/span adjustment → 4) Square root extraction → 5) Output limits	
Accuracy (25°C)		±0.2% of full scale	
Temperature coefficient		±0.015%/°C of full scale	
Resolution		1/4,096 of full scale	
Input signal range		–15 to 115%	

Item		Specifications
Power supply for 2-wire transmitter		Output voltage: 24 V DC ±15% for each input (without load) Current capacity: 22 mA max. for each input Short-circuit control current: 22 to 27 mA Allowable short-circuit time: Ambient temperature less than 40°C: No limit Ambient temperature 40 to 55°C: 10 min or less
Input impedance		4 to 20 mA for 2-wire transmitter: 250 Ω; 4 to 20 mA: 250 Ω; 1 to 5 V: 1 MΩ min.
Warmup time		10 min
Response time		0.5 s (travel time from input 0% to 90%, for step input)
Conversion period		100 ms/4 inputs
Maximum time to store data in CPU Unit		Conversion period + one CPU Unit cycle
Input error detection		Error detected when under −17.2% (4 to 20 mA: 1.25 mA; 1 to 5 V: 0.3125 V) or over 112.5% (4 to 20 mA: 22 mA; 1 to 5 V: 5.5 V).
Operation at input disconnection		Process value of −15% stored.
Input disconnection overrange time		Approx. 1 s
Function	**Mean value processing (input filter)**	Calculates the moving average for the specified number of process values (1 to 16), and stores that value in the CIO Area as the process value.
	Process value alarm	Process value 4-point alarm (HH, H, LL, L), alarm hysteresis, and ON-delay timer (0 to 60 s) are available.
	Rate-of-change calculation	Calculates the amount of change per comparison time interval (1 to 16 s).
	Rate-of-change alarm	Rate-of-change 2-point alarm (H, L), alarm hysteresis (shared with process value alarm), and ON-delay timer (0 to 60 s, shared with process value alarm) are available.
	Square root	When the process value scaling maximum value is A and the minimum value is B: $\text{Output} = \sqrt{(A-B)\ \ (\text{Input}-B)} + B$ Dropout: Output approx. 7% maximum linear (output = input) characteristics **Note: 1.** The square root function is only enabled when the maximum scaling value is greater than the minimum value. **2.** When square root processing is being performed, set the maximum and minimum scaling values to the values required after square root processing of the current or other input values.
Isolation		Between inputs and between input terminals and PLC signals: Isolation by transformer
Insulation resistance		20 MΩ (at 500 V DC) between inputs
Dielectric strength		Between inputs: 1,000 V AC, at 50/60 Hz, for 1 min, leakage current 10 mA max.
External connections		Terminal block (detachable)
Unit number settings		Set by rotary switches on front panel, from 0 to 95.
Indicators		Three LED indicators on front panel (for normal operation, errors detected at the 2-Wire Transmitter Input Unit, and errors related to the CPU Unit).
Front panel connector		Sensor input connector terminal block (detachable)
Effect on CPU Unit cycle time		0.3 ms
Current consumption		5 V DC at 150 mA max., 26 V DC at 160 mA max.
Dimensions		35 × 130 × 126 mm (W × H × D) **Note:** The height including the Backplane is 145 mm.
Weight		450 g max.
Standard accessories		None

Terminal Connection Diagram

2-Wire Transmitter Input

CS1W-PTW01 Isolated-type 2-Wire Transmitter Input Unit

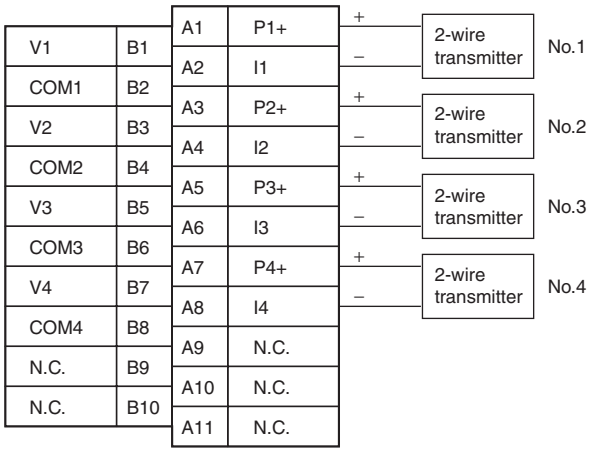

Current Input (No Power Supply Necessary)

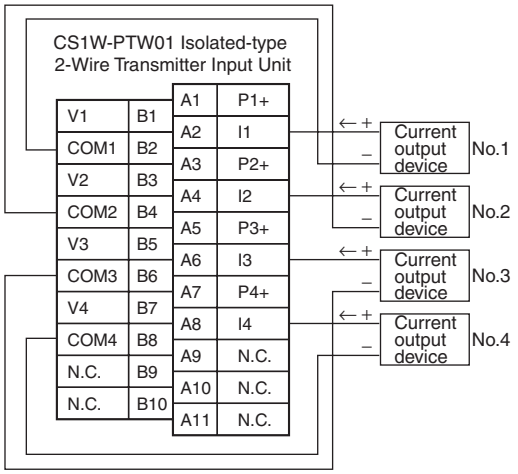

Voltage Input

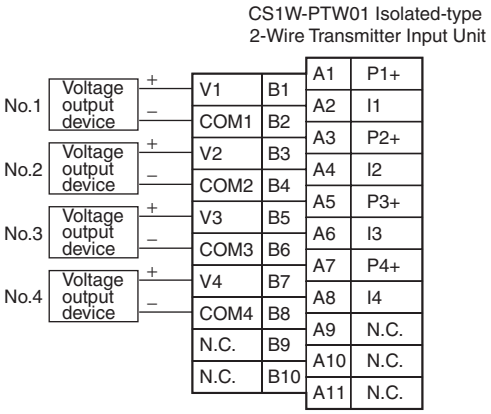

Note: In all of the above cases, leave all unused terminals open (e.g., terminals A1, A2, B1, and B2 for input No. 1).

Terminal Block Diagram

CS1W-PTW01 Isolated-type 2-Wire Transmitter Input Unit

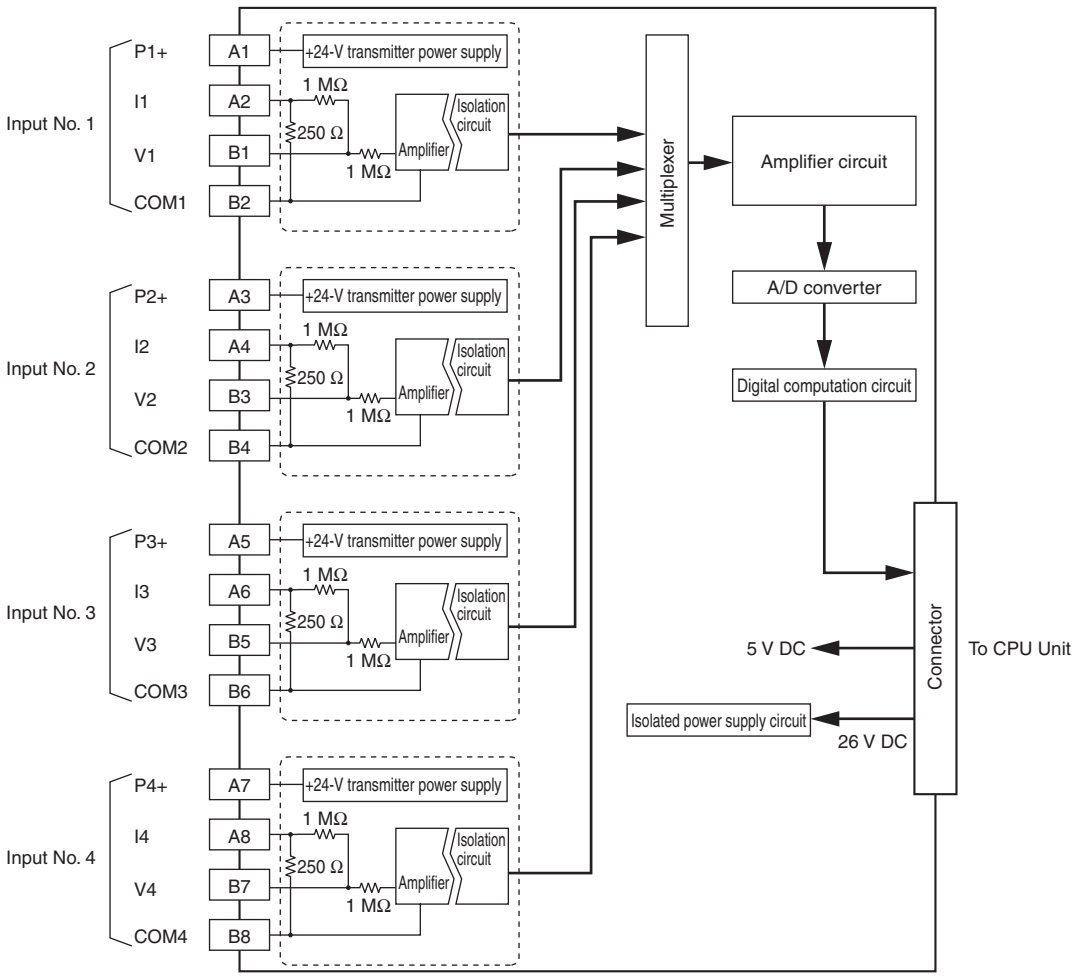

2-Wire Transmitter Input

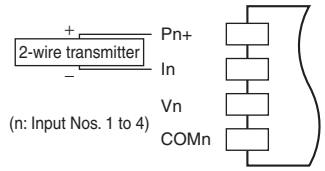

4-mA to 20-mA Input

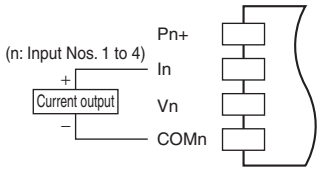

1-V to 5-V Input

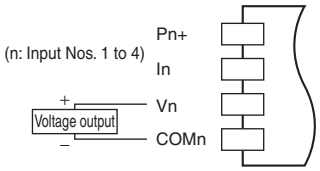

CS1W-PTR01 Power Transducer Input Unit

Overview

The CS1W-PTR01 Power Transducer Input Unit provides up to eight inputs of 0 to 1 mA or –1 to 1 mA from power transducers, and sends the data to the CPU Unit each cycle.

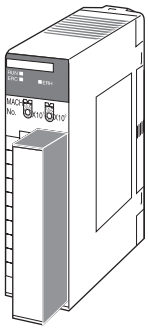

System Configuration

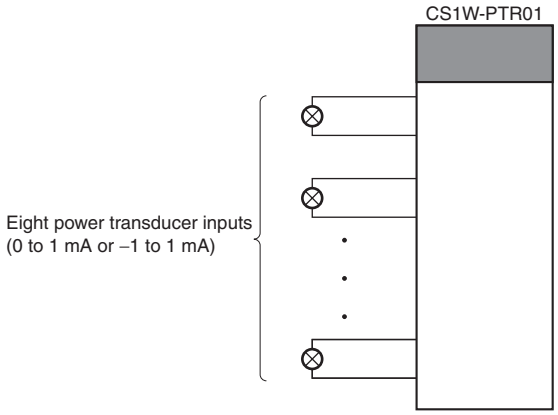

Specifications

Item		Specifications	
Model		CS1W-PTR01	
Applicable PLC		CS Series	
Unit type		CS-series Special I/O Unit	
Mounting position		CS-series CPU Rack or CS-series Expansion Rack (Cannot be mounted to C200H Expansion I/O Rack or SYSMAC BUS Remote I/O Slave Rack.)	
Maximum number of Units		80 (within the allowable current consumption and power consumption range)	
Unit numbers		00 to 95 (Cannot duplicate Special I/O Unit numbers.)	
Areas for data exchange with CPU Unit	**Special I/O Unit Area**	10 words/Unit Power Transducer Input Unit to CPU Unit: All process values, process value alarms (L, H)	
	DM Area words allocated to Special I/O Units	100 words/Unit CPU Unit to Power Transducer Input Unit: Input signal type, scaling of process value in industrial units, process value alarm setting (L, H), inrush input upper limit, inrush input upper limit time, zero/span adjustment value, etc.	
Number of inputs		8	
Input signal type		Either 0 to 1 mA or –1 to 1 mA.	Input signal type and scaling to industrial units are separate for each of the 8 inputs. **Note:** Input signal type and scaling to industrial units are set in the DM Area. Example: Input signal type: 0 to 1 mA from power transducer; industrial unit scaling: 0 to 500 W. DM Area settings are as follows: Input signal type: 0 (0000 hex) Industrial unit maximum value stored: 500 (01F4 hex) Industrial unit minimum value stored: 0 (0000 hex)
User-defined scaling in industrial units		Scaling required for the above input signals. (Any minimum and maximum values can be set.) (8 inputs set separately.)	
Data storage in the CIO Area		The value derived from carrying out the following processing in order of the process value data is stored in four digits hexadecimal (binary values) in the allocated words in the CIO Area. 1) Mean value processing → 2) Scaling → 3) Zero/span adjustment → 4) Inrush input limit → 5) Output limits	
Accuracy (25°C)		±0.2% of full scale	
Temperature coefficient		±0.015%/°C of full scale	
Resolution		1/4,096 of full scale	
Input signal range		For 0 to 1 mA: –15 to 115%; for –1 to 1 mA: –7.5 to 107.5%	
Input impedance		100 Ω (typical)	
Warmup time		10 min	
Response time		1.2 s (travel time from input 0% to 90%, for step input)	
Conversion period		200 ms/8 inputs	
Maximum time to store data in CPU Unit		Conversion period + one CPU Unit cycle	

Item		Specifications
Input error detection		None.
Operation at input disconnection		Process value corresponding to 0 mA stored.
Function	**Inrush input limit**	When the process value is increased from 2% or less, the inrush input limit function limits the increase for a set time. (It is available only for inputs of 0 to 1 mA.) This function can be used to prevent sudden process value increases due to inrush currents caused by motor startup and so on. Upper limit value: −32,000 to 32,000 Upper limit time: 0 to 100 s
	Process value alarm	Process value 2-point alarm (H, L), hysteresis, and ON-delay timer (0 to 60 s) are available.
	Mean value processing (input filter)	Calculates the moving average for the past four process values (every 200 ms), and stores that value in the CIO Area as the process value.
Isolation		Between inputs: No isolation Between input terminals and PLC signals: Isolation by transformer and photocoupler
Insulation resistance		20 MΩ (at 500 V DC) between inputs and internal PLC signals
Dielectric strength		Between inputs and internal PLC signals: 1,000 V AC, at 50/60 Hz, for 1 min, leakage current 10 mA max.
External connections		Terminal block (detachable)
Unit number settings		Set by rotary switches on front panel, from 0 to 95.
Indicators		Three LED indicators on front panel (for normal operation, errors detected at the Power Transducer Input Unit, and errors related to the CPU Unit).
Front panel connector		Sensor input connector terminal block (detachable)
Effect on CPU Unit cycle time		0.3 ms
Current consumption		5 V DC at 150 mA max., 26 V DC at 80 mA max.
Dimensions		35 × 130 × 126 mm (W × H × D) **Note:** The height including the Backplane is 145 mm.
Weight		450 g max.
Standard accessories		None

Terminal Block Diagram

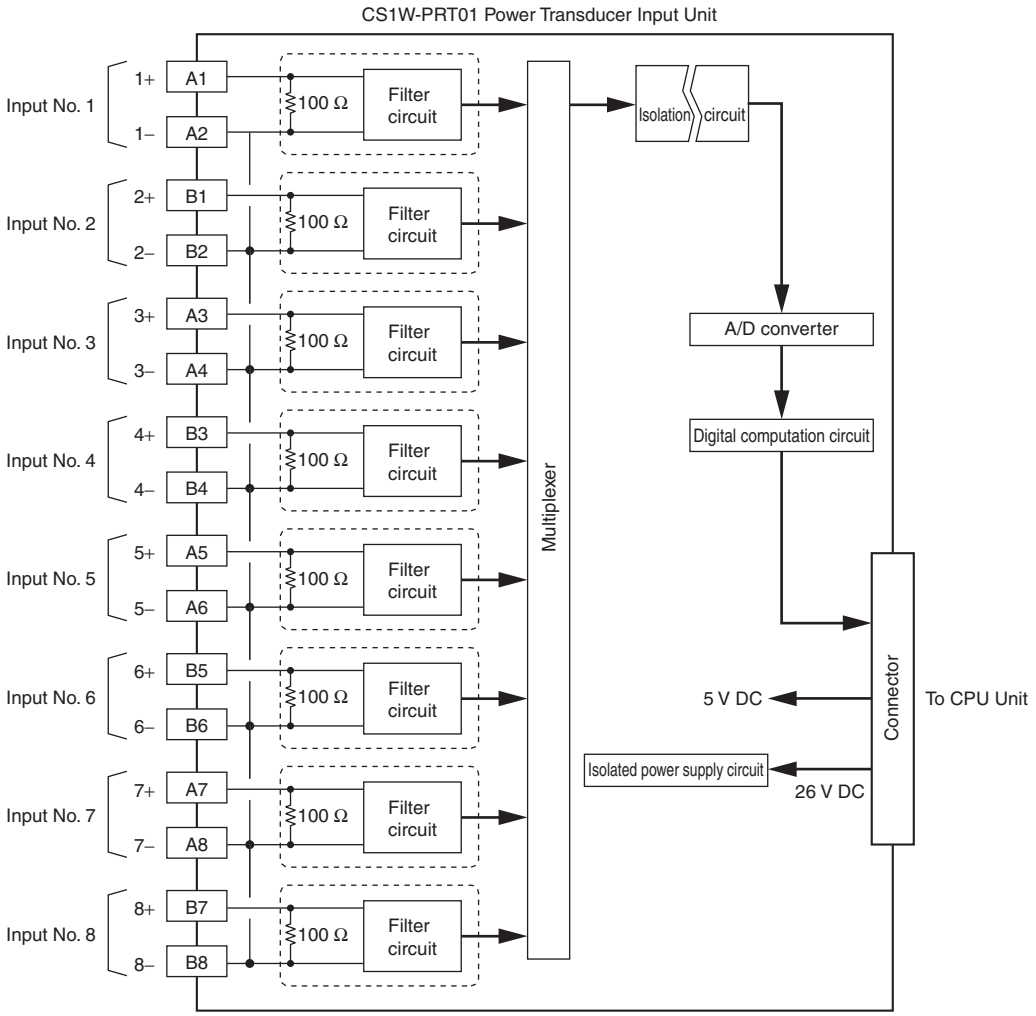

CS1W-PTR02 Analog Input Unit (100 mV)

Overview

The CS1W-PTR02 Analog Input Unit provides up to eight inputs of 0 to 100 mV or –100 to 100 mA, and sends the data to the CPU Unit each cycle.

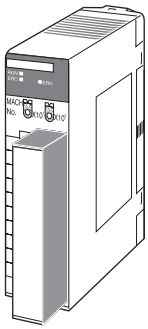

System Configuration

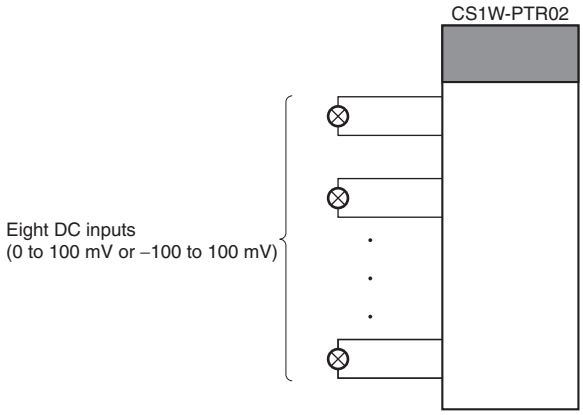

Specifications

Item		Specifications	
Model		CS1W-PTR02	
Applicable PLC		CS Series	
Unit type		CS-series Special I/O Unit	
Mounting position		CS-series CPU Rack or CS-series Expansion Rack (Cannot be mounted to C200H Expansion I/O Rack or SYSMAC BUS Remote I/O Slave Rack.)	
Maximum number of Units		80 (within the allowable current consumption and power consumption range)	
Unit numbers		00 to 95 (Cannot duplicate Special I/O Unit numbers.)	
Areas for data exchange with CPU Unit	**Special I/O Unit Area**	10 words/Unit Analog Input Unit to CPU Unit: All process values, process value alarms (L, H)	
	DM Area words allocated to Special I/O Units	100 words/Unit CPU Unit to Analog Input Unit: Input signal type, scaling of process value in industrial units, process value alarm setting (L, H), inrush input upper limit, inrush input upper limit time, zero/span adjustment value, etc.	
Number of inputs		8	
Input signal type		Either 0 to 100 mV or –100 to 100 mV.	Input signal type and scaling to industrial units are separate for each of the 8 inputs. **Note:** Input signal type and scaling to industrial units are set in the DM Area. Example: Input signal type: 0 to 100 mV; industrial unit scaling: 0 to 500. DM Area settings are as follows: Input signal type: 0 (0000 hex) Industrial unit maximum value stored: 500 (01F4 hex) Industrial unit minimum value stored: 0 (0000 hex)
User-defined scaling in industrial units		Scaling required for the above input signals. (Any minimum and maximum values can be set.) (8 inputs set separately.)	
Data storage in the CIO Area		The value derived from carrying out the following processing in order of the process value data is stored in four digits hexadecimal (binary values) in the allocated words in the CIO Area. 1) Mean value processing → 2) Scaling → 3) Zero/span adjustment → 4) Inrush input limit → 5) Output limits	
Accuracy (25°C)		±0.2% of full scale	
Temperature coefficient		±0.015%/°C of full scale	
Resolution		1/4,096 of full scale	
Input signal range		For 0 to 100 mV: –15 to 115%; for –100 to 100 mV: –7.5 to 107.5%	
Input impedance		Balanced: 1 MΩ min. (typical); unbalanced: 20 kΩ (typical)	
Warmup time		10 min	
Response time		1.2 s (travel time from input 0% to 90%, for step input)	
Conversion period		200 ms/8 inputs	
Maximum time to store data in CPU Unit		Conversion period + one CPU Unit cycle	
Input error detection		None	
Operation at input disconnection		Undefined	
Function	**Inrush input limit**	When the process value is increased from 2% or less, the inrush input limit function limits the increase for a set time. (It is available only for inputs of 0 to 100 mV.) This function can be used to prevent sudden process value increases due to inrush currents caused by motor startup and so on. Upper limit value: –32,000 to 32,000 Upper limit time: 0 to 100 s	
	Process value alarm	Process value 2-point alarm (H, L), hysteresis, and ON-delay timer (0 to 60 s) are available.	
	Mean value processing (input filter)	Calculates the moving average for the past four process values (every 200 ms), and stores that value in the CIO Area as the process value.	
Isolation		Between inputs: No isolation Between input terminals and PLC signals: Isolation by transformer and photocoupler.	
Insulation resistance		20 MΩ (at 500 V DC) between inputs and internal PLC signals.	
Dielectric strength		Between inputs and internal PLC signals: 1,000 V AC, at 50/60 Hz, for 1 min, leakage current: 10 mA max.	
External connections		Terminal block (detachable)	
Unit number settings		Set by rotary switches on front panel, from 0 to 95.	
Indicators		Three LED indicators on front panel (for normal operation, errors detected at the Analog Input Unit, and errors related to the CPU Unit).	
Front panel connector		Sensor input connector terminal block (detachable)	
Effect on CPU Unit cycle time		0.3 ms	
Current consumption		5 V DC at 150 mA max., 26 V DC at 80 mA max.	
Dimensions		35 × 130 × 126 mm (W × H × D) **Note:** The height including the Backplane is 145 mm.	
Weight		450 g max.	
Standard accessories		None	

Terminal Block Diagram

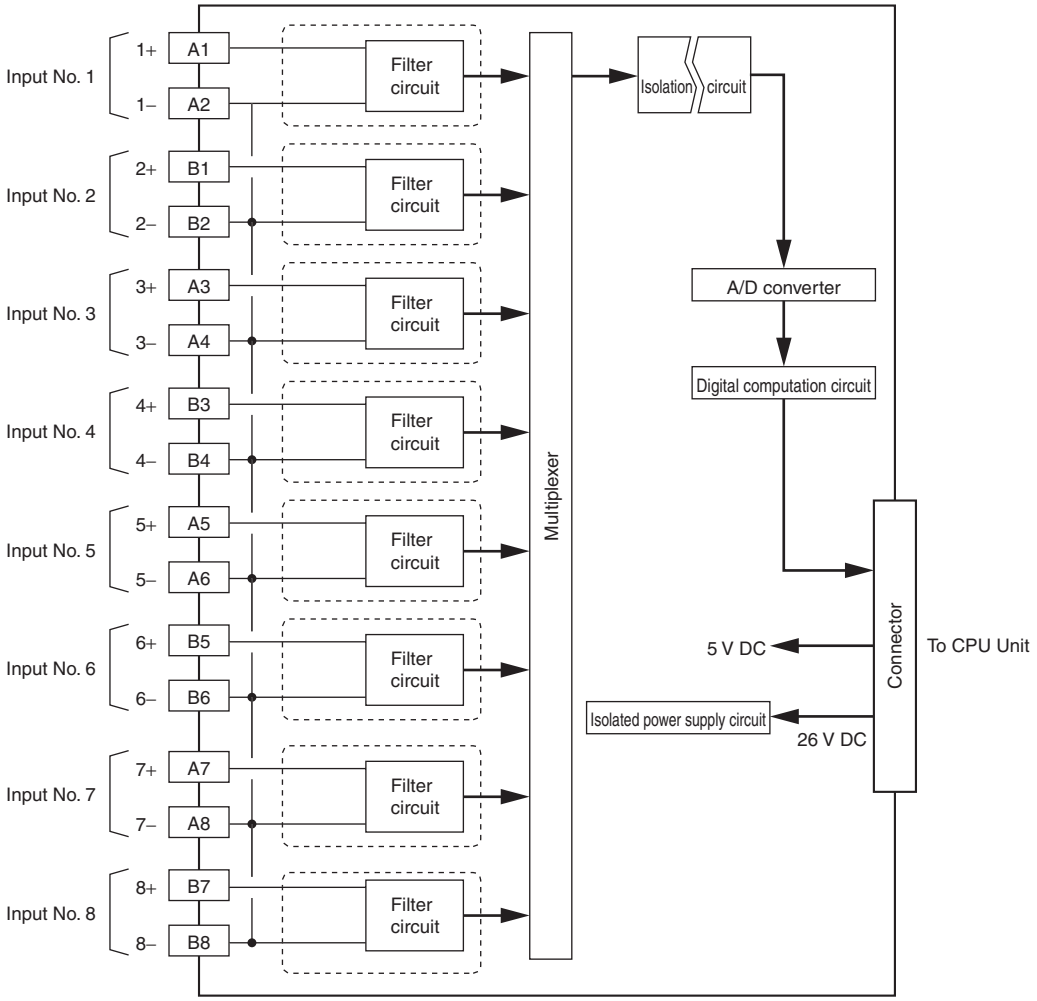

CS1W-PPS01 Isolated-type Pulse Input Unit

Overview

The CS1W-PPS01 Isolated-type Pulse Input Unit provides up to four pulses from a device such as a displacement flowmeter, and sends scaled instantaneous values (pulses/time unit) to the CPU Unit each cycle. The accumulated value can also be calculated at the same time and transferred to the CPU Unit at each cycle.

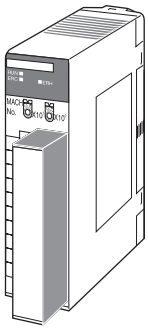

System Configuration

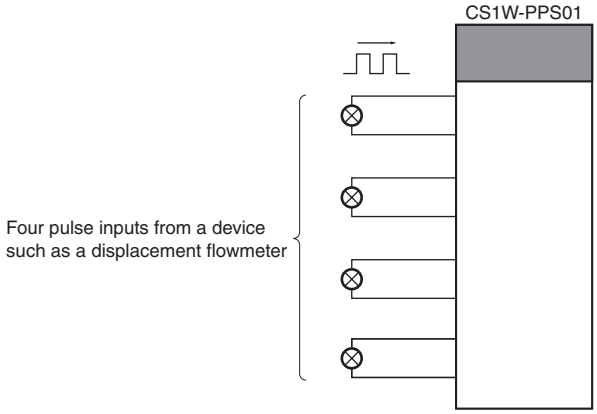

Specifications

Item		Specifications
Model		CS1W-PPS01
Applicable PLC		CS-series
Unit type		CS-series Special I/O Unit
Mounting position		CS-series CPU Rack or CS-series Expansion Rack (Cannot be mounted to C200H Expansion I/O Rack or SYSMAC BUS Remote I/O Slave Rack.)
Maximum number of Units		80 (within the allowable current consumption and power consumption range)
Unit numbers		00 to 95 (Cannot duplicate Special I/O Unit numbers.)
Areas for data exchange with CPU Unit	**Special I/O Unit Area**	10 words/Unit Pulse Input Unit to CPU Unit: All process values, process value alarms (LL, L, H, HH), accumulated values, Accumulation Reset Bit
	DM Area words allocated to Special I/O Units	100 words/Unit CPU Unit to Pulse Input Unit: Instantaneous value conversion coefficient, instantaneous value scaling, pulse weight, number of values for moving average, instantaneous value alarm settings (LL, L, H, HH), zero/span adjustment, etc.
Number of pulse inputs		4
Pulse input type		Voltage input, no-voltage semiconductor input, contact input (selected individually for each of 4 inputs, according to connection terminals)
		No-voltage semiconductor input: Connected to voltage input terminals (between Fn+ and COMn). Maximum coefficient speed: 20,000 pulses/s (duty ratio: 50%) Detection voltage: 4 V DC Short-circuit current between terminals: 1.2 mA DC ON resistance: 0.8 kΩ max. OFF resistance: 5.0 kΩ min.
		Voltage input: Connected to voltage input terminals (between Fn+ and COMn). Waveform: Square wave Maximum coefficient speed: 20,000 pulses/s (duty ratio: 50%) ON voltage: 0 to 1 V OFF voltage: 3 to 30 V
		Contact input: Connected to contact input terminals (between Sn+ and COMn). Maximum coefficient speed: 20 pulses/s (duty ratio: 50%) Detection voltage: 8 V DC Short-circuit current between terminals: 2.4 mA DC ON resistance: 0.8 kΩ max. OFF resistance: 5.0 kΩ min.

Item		Specifications		
Sensor power supply		For no-voltage semiconductor inputs, etc., a 12-V DC power supply can be provided for the sensors that are the pulse sources. Output voltage: 12 V DC ±15% Current capacity: 30 mA max. Limit current when short-circuited: 31 to 55 mA Allowable short-circuit time: No limit		
Accumulation conversion period		100 ms/4 inputs		
Maximum time to store data in CPU Unit		Conversion period + one CPU Unit cycle		
Function	**Instantaneous value output**	Conversion to instantaneous values	This function can be used to count the number of pulses per time unit, and to convert the values to instantaneous values (pulses x pulse weight / time unit). Any of the following can be selected as the time unit: 1 s, 3 s, 10 s, 30 s, or 60 s. (The time unit is set in the DM Area.) **Note: 1.** Errors and fluctuations will increase when the input signal pulse rate is low, so specify a longer time unit. **2.** The instantaneous value is only refreshed at intervals of the time unit set. Therefore, when the Unit is restarted, the instantaneous value will be 0000 until the time set as the time unit has elapsed. **3.** When pulse weight conversion is used for accumulated values, the number of pulses obtained by multiplying the actual number of input pulses by the pulse weight (0.1000 to 3.2000) for one time unit is used.	
		Instantaneous value scaling	This function can be used for scaling instantaneous values (pulses × pulse weight/time unit), i.e., setting data with respect to a maximum value, and storing them in the allocated words of the CIO Area. • When instantaneous value (pulses × pulse weight/time unit) is 100% input: Can be set from 0.001 pulses/time unit to 32,000 pulses/time unit. • Maximum value for Instantaneous value scaling (industrial units): Scaling of the above instantaneous value (100% input) is possible from −32,000 to 32,000 (8300 to FFFF, 0000 to 7D00 hex). **Note:** When pulse weight conversion is used for accumulated values, scaling is already performed for each pulse, so an exponent of 10 of the industrial unit is set in the instantaneous value (pulses × pulse weight per time unit) for a 100% input.	Example 1: To obtain a pulse input of 0 to 2,000 pulses/s for a flow of 0 to 300.0 ml/s: Time unit: 1 s Instantaneous value 100% input: 2,000 Maximum value for instantaneous value scaling (industrial units): 3,000 Example 2: When pulse inputs at 0 to 2,000 pulses/s are obtained for a flowrate of 0 to 300.0 ml/s, and the pulse weight function is used for totaling: There are 0.15 ml per pulse, so the pulse weight = 0.15. For a flowrate of 0 to 300.0 ml/s, 0 to 2,000 × 0.15 = 300 pulses/s. Therefore, Time unit: 1 s Instantaneous value 100% input: 300 Maximum value for instantaneous value scaling (industrial units): 3,000
		Data storage in the CIO Area	The value derived from carrying out the following processing in order of the instantaneous value (pulses x pulse weight/time unit) is stored in four digits hexadecimal (binary values) in the allocated words in the CIO Area. 1) Mean value processing → 2) Instantaneous value scaling → 3) Scaling → 4) Zero/span adjustment → 5) Output limits	
		Mean value processing (input filter)	Calculates the moving average for the specified number of past instantaneous values (1 to 16), and stores that value in the CIO Area as the instantaneous value.	
		Instantaneous value alarm	Instantaneous value 4-point alarm (HH, H, L, LL), hysteresis, and ON-delay timer (0 to 60 s) are available.	
Function	**Accumulated output**	Pulse weight conversion	Performs scaling for a single pulse. Use for the accumulated value when the pulse weight (weight/pulse) is a fraction (not an exponent of 10). (See note.) The pulse weight (0.1 to 3.2) is multiplied by the actual number of pulses input. This number of pulses is used as the input for conversion to instantaneous values (pulses × pulse weight per time unit) and the input for totaling prior to stepdown. Example: When the pulse weight from the flowmeter is 0.26 ml/pulse, the pulse weight is set to 0.26. When one pulse (0.26 ml) is input, it is treated as a 0.26 pulse, and when two pulses (0.52 ml) are input, they are treated as a 0.52 pulse. The weight per pulse becomes 1 ml, so to calculate in the CPU Unit the simple (unscaled) value in industrial units (ml) based on the accumulated value from the Pulse Input Unit (value in words n+5 to n+8), the value can be calculated simply using 1 ml/pulse. **Note:** When the accumulated value from the Pulse Input Unit in the CPU Unit is not used (i.e., when only the instantaneous value is used), pulse weight conversion is not required. Use instantaneousness value scaling to convert to industrial units.	
		Accumulated value	The accumulated number of pulses (0 to 9,999 pulses) for each input is stored in the allocated words of the CIO Area. When 9,999 is exceeded, the value returns to 0 and starts counting again. **Note:** When pulse weight conversion is used, the accumulated value for the number of pulses obtained by multiplying the actual number of input pulses by the pulse weight (0.1000 to 3.2000) is used.	
		Stepdown	When the accumulated value is used, this function prevents accumulated value overflow by reducing the number of input pulses. The actual number of input pulses is multiplied by one of four factors (×1, ×0.1, ×0.01, or ×0.001), and the number of input pulses accumulated is then based on that value. **Note:** This stepdown function operates only for accumulated values, and not for instantaneous values. When the pulse weight conversion function is used, it uses for the number of pulses obtained by multiplying the actual number of input pulses by the pulse weight (0.1000 to 3.2000).	
Isolation		Between inputs and between input terminals and PLC signals: Isolation by transformer and photocoupler		
Insulation resistance		20 MΩ (at 500 V DC) between inputs		
Dielectric strength		Between inputs: 1,000 V AC, at 50/60 Hz, for 1 min, leakage current 10 mA max.		

Item	Specifications
External connections	Terminal block (detachable)
Unit number settings	Set by rotary switches on front panel, from 0 to 95.
Indicators	Three LED indicators on front panel (for normal operation, errors detected at the Pulse Input Unit, and errors related to the CPU Unit).
Front panel connector	Sensor input connector terminal block (detachable)
Effect on CPU Unit cycle time	0.3 ms
Current consumption	5 V DC at 200 mA max., 26 V DC at 160 mA max.
Warmup time	10 min
Dimensions	35 × 130 × 126 mm (W × H × D) **Note:** The height including the Backplane is 145 mm.
Weight	450 g max.
Standard accessories	None

Terminal Connection Diagram

No-voltage Semiconductor Input

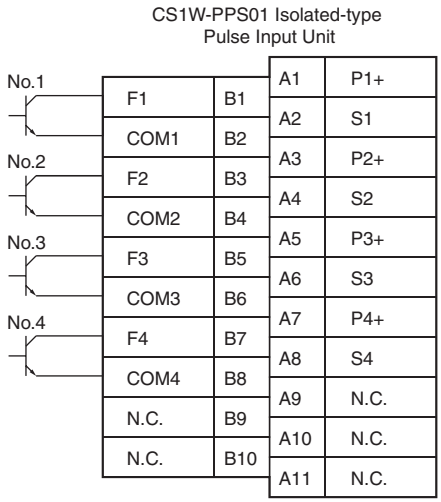

Voltage Input

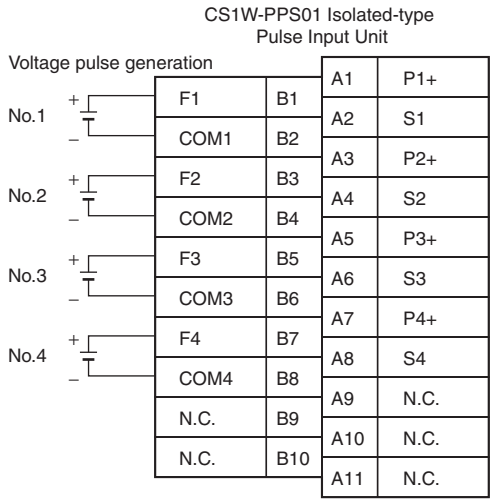

Contact Input

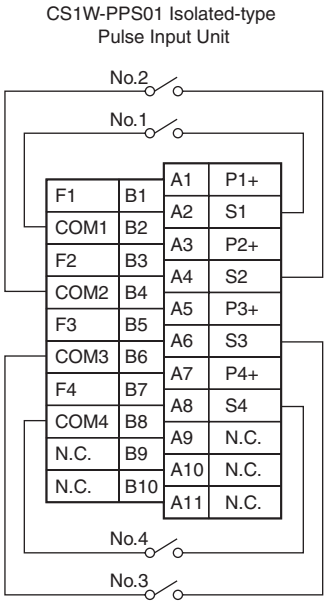

3-wire Sensor Input

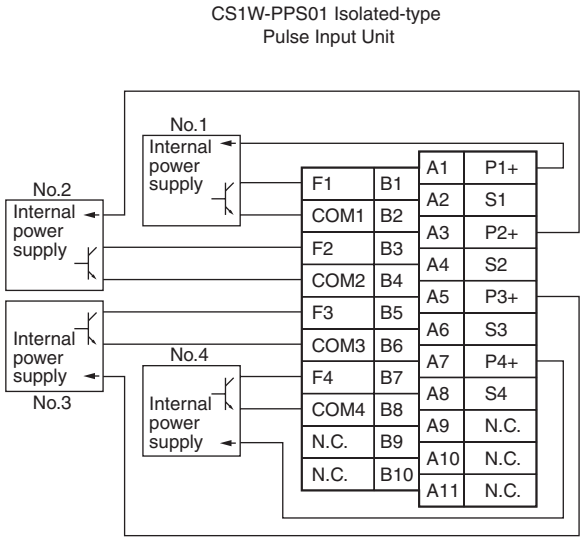

Note: In all of the above cases, leave all unused inputs open between the terminals (e.g., between B1 and B2 for no-voltage semiconductor input No. 1).

Terminal Block Diagram

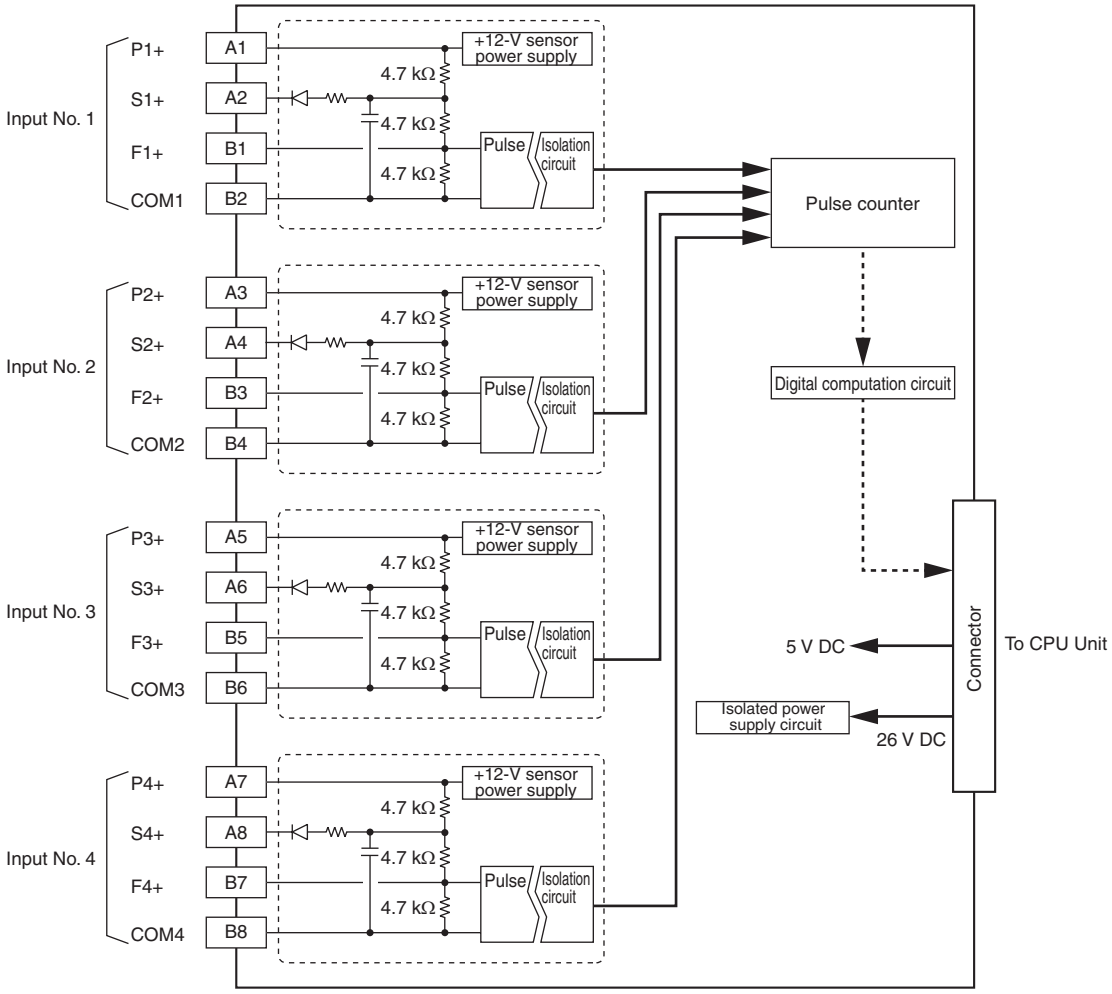

Contact Input (for Metal Contacts)

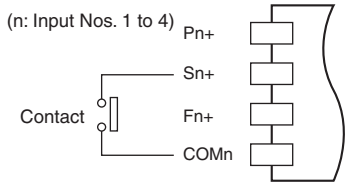

Voltage Pulse Input

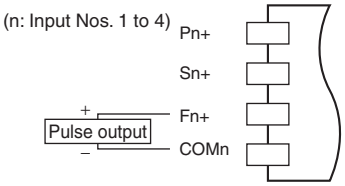

Sensor Power Supply (Connected to 3-wire Sensor)

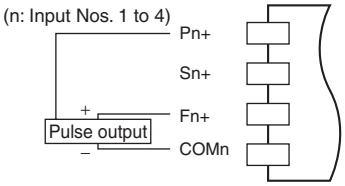

CS1W-PMV01 Isolated-type Analog Output Unit

Overview

Each cycle, the CS1W-PMV01 Isolated-type Analog Output Unit converts up to four analog output set values from the CPU Unit to either 4 to 20 mA or 1 to 5 V, and outputs them. It can also provide answer back for checking actual output values.

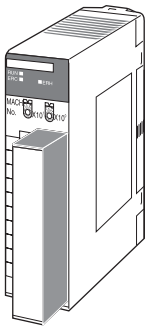

System Configuration

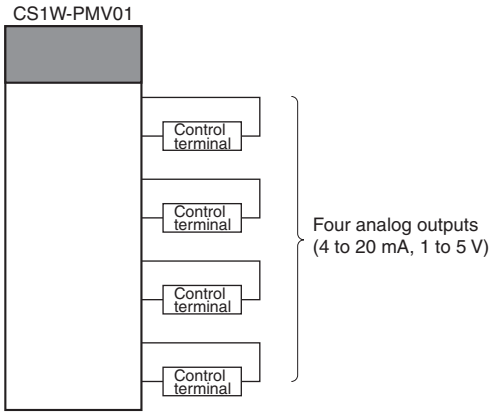

Specifications

Item		Specifications
Model		CS1W-PMV01
Applicable PLC		CS Series
Unit type		CS-series Special I/O Unit
Mounting position		CS-series CPU Rack or CS-series Expansion Rack (Cannot be mounted to C200H Expansion I/O Rack or SYSMAC BUS Remote I/O Slave Rack.)
Maximum number of Units		80 (within the allowable current consumption and power consumption range)
Unit numbers		00 to 95 (Cannot duplicate Special I/O Unit numbers.)
Areas for data exchange with CPU Unit	**Special I/O Unit Area**	10 words/Unit CPU Unit to Analog Output Unit: Analog output values for each output Analog Output Unit to CPU Unit: Answer input values for each output, output disconnection
	DM Area words allocated to Special I/O Units	100 words/Unit CPU Unit to Analog Output Unit: Output hold for when CPU Unit error occurs, high/low limit values, rate-of-change limit values (positive and negative directions), number of values for answer input moving average, zero/span adjustment for control outputs and answer inputs, etc.
Number of outputs		4
Output signal types		Either 4 to 20 mA or 1 to 5 V (separate for each of the four outputs). Switched according to the connection terminals.
User-defined scaling in industrial units		None
Data storage in the CIO Area		0 to 4,000 (0000 to 0FA0 hex), fixed 0: 4 mA or 1 V; 4,000: 20 mA or 5 V The values derived from carrying out the following processing in order of the values in the allocated words in the CIO Area are output in analog. 1) Output hold → 2) Rate-of-change limit → 3) Zero/span adjustment → 4) High/low limits Therefore, the values after processing are confirmed by analog inputs.
Accuracy (25°C)		When 4 to 20 mA: ±0.1% of full scale When 1 to 5 V: ±0.2% of full scale
Temperature coefficient		±0.015%/°C of full scale
Resolution		1/4,000 of full scale
Warmup time		10 min
Output response time		0.2 s (travel time from output 0% to 100%, for step output)
D/A conversion period		100 ms/4 outputs
Maximum time to store data in CPU Unit		Conversion period + one CPU Unit cycle

Item		Specifications
Output signal range		Approx. −20 to 115%
Allowable load resistance		When 4 to 20 mA: 404 Ω max. (when output range is −20 to 115%) or 458 Ω max. (when output range is −20 to 100%) (Refer to note.) When 1 to 5 V: 250 kΩ max.
Output impedance		When 1 to 5 V: 250 Ω (typical)
Voltage when open between terminals		Approx. 15 V
Answer input function		The actual analog output values (4 to 20 mA or 1 to 5 V) from the Unit's output terminals can be read. Data stored to allocated words of CIO Area: 0 to 4,000 (0000 to 0FA0 hex), fixed. (When 4 mA or 1 V: 0; when 20 mA or 5 V: 4,000) Accuracy: ±0.2% of full scale Resolution: 1/2000 Temperature coefficient: ±0.015%/°C
Current output disconnection detection function		When the actual output of 4 to 20 mA from the Analog Output Unit's output terminals is 0.5 mA or less, it is regarded as an external output circuit current loop disconnection, and the Output Disconnection Flag turns ON.
Function	**Rate-of-change limit**	This function can be used to control the speed of up and down changes in analog output values.
	Output high/low limits	This function can be used to place high and low limits on analog output values.
	Output hold	This function holds the analog output value to the previous value or to a specified preset value when any of the following CPU Unit errors occurs, and outputs the analog output value in the CIO Area when the error is cleared. • CPU Unit fatal error (including FALS execution) • CPU error in CPU Unit • All outputs turned OFF with Output OFF Bit
Isolation		Between outputs and between output terminals and PLC signals: Isolation by transformer and photocoupler
Insulation resistance		20 MΩ (at 500 V DC) between outputs
Dielectric strength		Between outputs: 1,000 V AC, at 50/60 Hz, for 1 min, leakage current 10 mA max.
External connections		Terminal block (detachable)
Unit number settings		Set by rotary switches on front panel, from 0 to 95.
Indicators		Three LED indicators on front panel (for normal operation, errors detected at the Analog Output Unit, and errors related to the CPU Unit).
Front panel connector		Output connector terminal block (detachable)
Effect on CPU Unit cycle time		0.3 ms
Current consumption		5 V DC at 150 mA max., 26 V DC at 160 mA max.
Dimensions		35 × 130 × 126 mm (W × H × D) **Note:** The height including the Backplane is 145 mm.
Weight		450 g max.
Standard accessories		None

Note: The following diagram shows the relationship between the allowable load resistance and the current output.

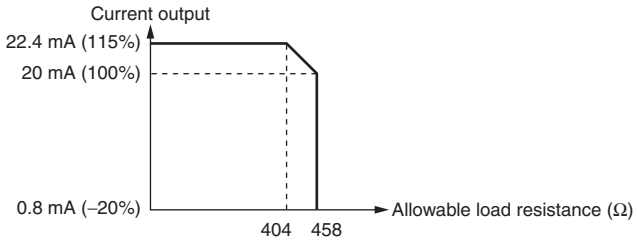

Output Values According to CPU Unit Status

Analog output values from the Analog Output Unit will be as shown in the following table, depending on the status of the CPU Unit.

CPU Unit status	Analog output values from Unit	
Fatal error (including FALS(007) execution)	The output hold function holds the previous value or a specified preset value.	
CPU error		
All outputs turned OFF with Output OFF Bit		
Change of operation mode from RUN or Monitor to Program (See note.)	When the CPU Unit's I/O Memory Hold Flag (A500.12) is OFF.	The output value in the CIO Area is cleared, and that value (0000 hex) is output refreshed.
	When the CPU Unit's I/O Memory Hold Flag (A500.12) is ON.	The output value in the CIO Area is held at the value prior to the operation mode change, and that is output refreshed.
Fatal error or CPU standby after turning ON the power supply	Either 0 mA or 0 V is output.	
Special I/O Unit cyclic refresh disabled	Outputs can be refreshed by means of IORF(097) in the ladder diagram program.	

Note: Regardless of the CPU Unit's operation mode (including Program Mode), the analog output value in the allocated words of the CIO Area is always output refreshed. As shown in the above table, however, when the operation mode is changed to Program Mode, the analog output value in the CIO Area is either cleared or held depending on the status of the CPU Unit's I/O Memory Hold Flag (A500.12). In particular, be careful when this flag is ON, because the value prior to the mode change will be held and that value will be output refreshed.

Terminal Block Diagram

Voltage Output

CS1W-PMV01 Isolated-type
Analog Output Unit

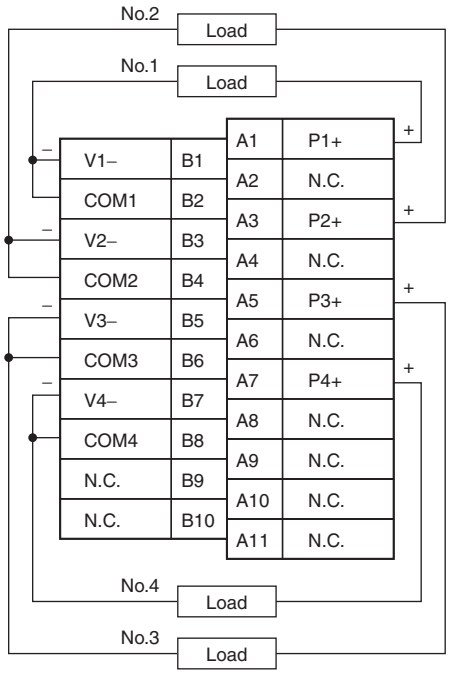

Current Output

CS1W-PMV01 Isolated-type
Analog Output Unit

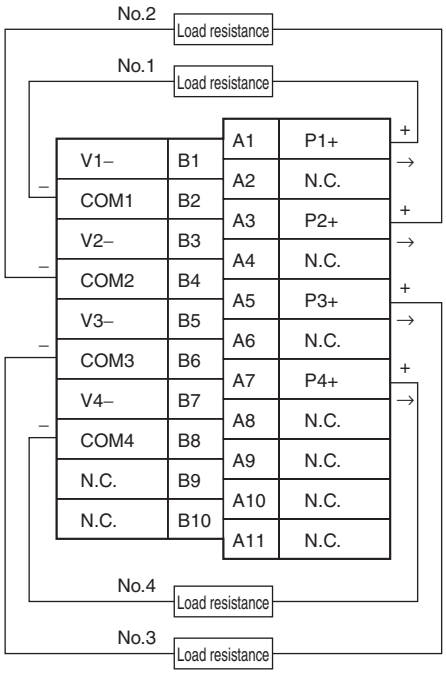

Note: In both of the above cases, short-circuit all unused inputs between V□ and COM□ (e.g., between terminals B1 and B2 for output No. 1) with the lead wire.

Terminal Block Diagram

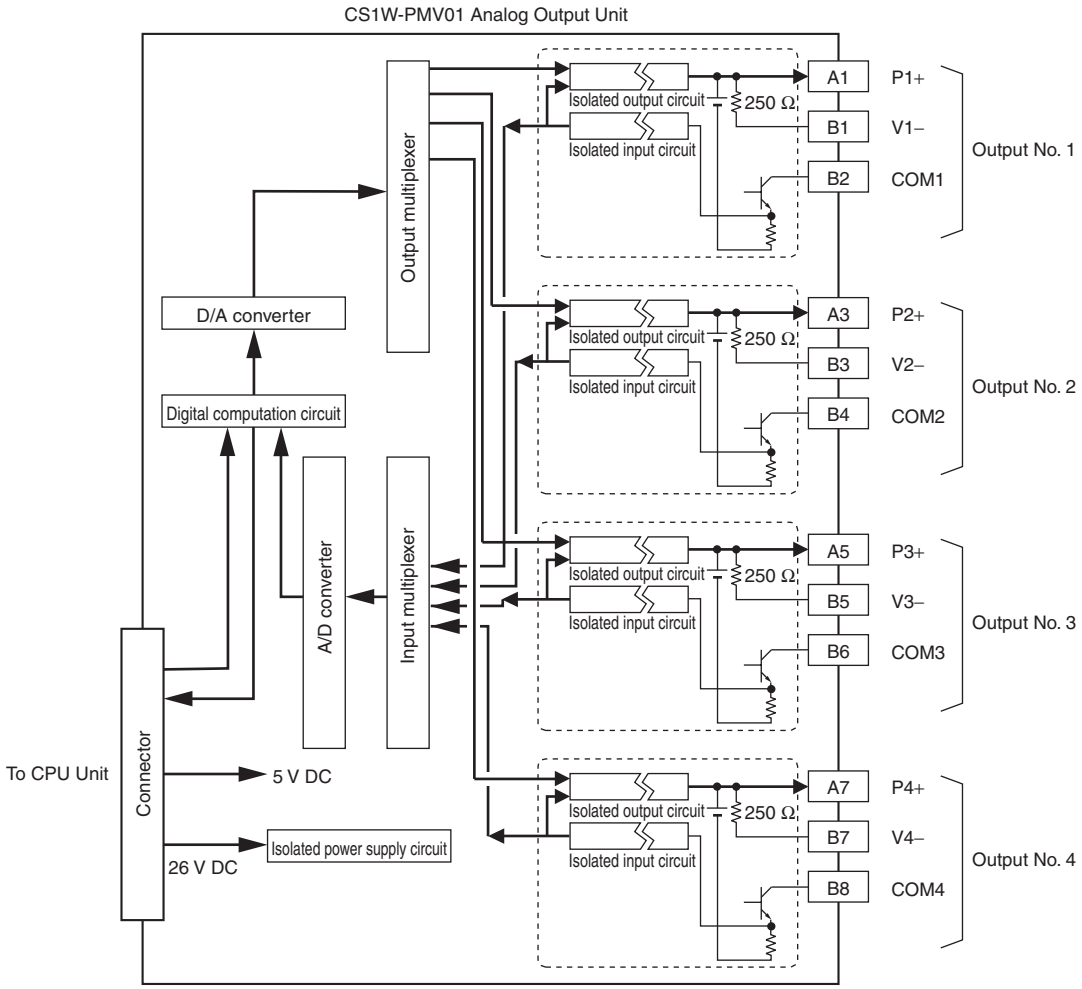

4- to 20-mA output

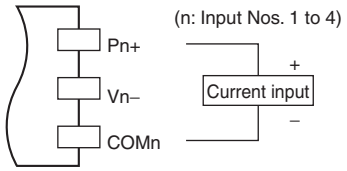

1- to 5-V output

Short-circuit between terminals Vn– and COMn–.

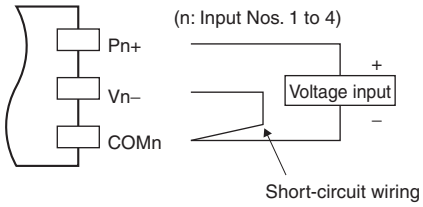

CS1W-PMV02 Isolated-type Analog Output Unit

Overview

Each cycle, the CS1W-PMV02 Isolated-type Analog Output Unit converts up to four analog output set values from the CPU Unit to analog voltage signals and outputs them.

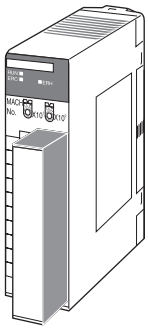

System Configuration

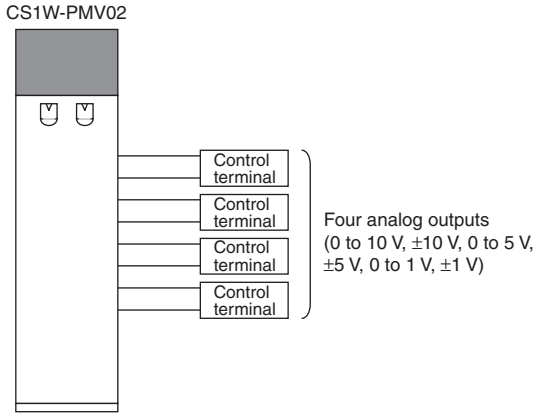

Specifications

Item		Specifications
Model		CS1W-PMV02
Applicable PLC		CS Series
Unit type		CS-series Special I/O Unit
Mounting position		CS-series CPU Rack or CS-series Expansion Rack (Cannot be mounted to C200H Expansion I/O Rack or SYSMAC BUS Remote I/O Slave Rack.)
Maximum number of Units		80 (within the allowable current consumption and power consumption range)
Unit numbers		00 to 95 (Cannot duplicate Special I/O Unit numbers.)
Areas for data exchange with CPU Unit	**Special I/O Unit Area**	10 words/Unit CPU Unit to Analog Output Unit: Analog output values for each output Analog Output Unit to CPU Unit: None
	DM Area words allocated to Special I/O Units	100 words/Unit CPU Unit to Analog Output Unit: Output hold for when CPU Unit error occurs, high/low limit values, rate-of-change limit values, zero/span adjustment for control outputs, etc.
Number of outputs		4
Output signal types		0 to 10 V, 0 to 5 V, 0 to 1 V, –10 to 10 V, –5 to 5 V, –1 to 1 V (Each output point can be set individually.)
User-defined scaling in industrial units		Scaling is possible for each of the above signal types individually. (The data corresponding to the minimum and maximum output values can be set freely.)
Data storage in the CIO Area		±32,000 (8300 to FFFF hex, 0000 to 7D00 hex)
Accuracy (25°C)		±0.1% of full scale
Temperature coefficient		±0.015%/°C of full scale
Resolution		–10 to 10 V, –1 to 1 V: 1/16,000 of full scale 0 to 10 V, 0 to 1 V, –5 to 5 V: 1/8,000 of full scale 0 to 5 V: 1/4,000 of full scale
Warmup time		10 min
Output response time		50 ms max. (travel time from output 0% to 90%, for step output)
D/A conversion period		40 ms/4 outputs
Maximum output delay time		Output response time + conversion period + one CPU Unit cycle
Output signal range		–15 to 115% (–7.5 to 107.5% for ±10-V and ±1-V ranges)
Allowable load resistance		10 kΩ min.

Item		Specifications
Output impedance		0.5 Ω max.
Voltage when open between terminals		–
Answer input function		None
Current output disconnection detection function		None
Function	**Rate-of-change limit**	This function can be used to control the speed of up and down changes in analog output values.
	Output high/low limits	This function can be used to place high and low limits on analog output values.
	Output hold	This function holds the analog output value to the previous value or to a specified preset value when any of the following CPU Unit errors occurs. Normal operation is restored when the CPU Unit error is cleared. • CPU Unit fatal error (including FALS execution) • CPU error in CPU Unit • CPU Unit's load interrupted
Isolation		Between outputs and between output terminals and PLC signals: Isolation by transformer and photocoupler
Insulation resistance		20 MΩ (at 500 V DC) between outputs
Dielectric strength		Between outputs: 1,000 V AC, at 50/60 Hz, for 1 min, leakage current 10 mA max.
External connections		Terminal block (detachable)
Unit number settings		Set by rotary switches on front panel, from 0 to 95.
Indicators		Three LED indicators on front panel (for normal operation, errors detected at the Analog Output Unit, and errors related to the CPU Unit).
Front panel connector		Output connector terminal block (detachable)
Effect on CPU Unit cycle time		0.3 ms
Current consumption		5 V DC at 120 mA max., 26 V DC at 120 mA max.
Dimensions		35 × 130 × 126 mm (W × H × D) **Note:** The height including the Backplane is 145 mm.
Weight		450 g max.
Standard accessories		None

Output Values According to CPU Unit Status

Analog output values from the Analog Output Unit will be as shown in the following table, depending on the status of the CPU Unit.

CPU Unit status	Analog output values from Unit	
Fatal error (including FALS(007) execution)	The output hold function holds the previous value or a specified preset value.	
CPU error		
All outputs turned OFF with Output OFF Bit		
Change of operation mode from RUN or Monitor to Program (See note.)	When the CPU Unit's I/O Memory Hold Flag (A500.12) is OFF.	The output value in the CIO Area is cleared, and that value (0000 hex) is output refreshed.
	When the CPU Unit's I/O Memory Hold Flag (A500.12) is ON.	The output value in the CIO Area is held at the value prior to the operation mode change, and that is output refreshed.
Fatal error or CPU standby after turning ON the power supply	0 V is output.	
Special I/O Unit cyclic refresh disabled	Outputs can be refreshed by means of IORF(097) in the ladder diagram program.	

Note: Regardless of the CPU Unit's operation mode (including Program Mode), the analog output value in the allocated words of the CIO Area is always output refreshed. As shown in the above table, however, when the operation mode is changed to Program Mode, the analog output value in the CIO Area is either cleared or held depending on the status of the I/O Memory Hold Flag (A500.12). In particular, be careful when this flag is ON, because the value prior to the mode change will be held and that value will be output refreshed.

Terminal Connection Diagram

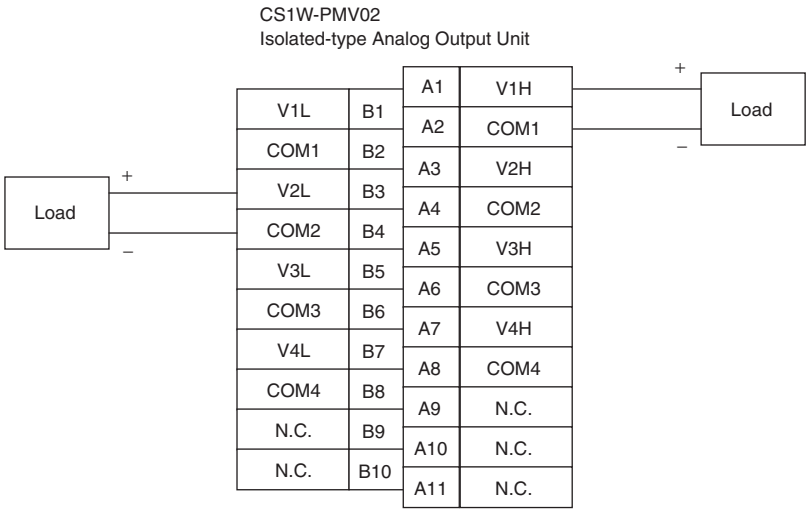

B terminals: 0 to 1 V, ±1 V; A terminals: 0 to 10 V, 0 to 5 V, ±10 V, ±5 V

Note: 1. Although signals 1/10 of the size of the A-row terminal output signals are output to the B terminals, simultaneous use of A (L) and B (H) terminals of the same number is prohibited.
2. Do not connect V□□ and COM□□ for all unused output numbers.

Terminal Block Diagram

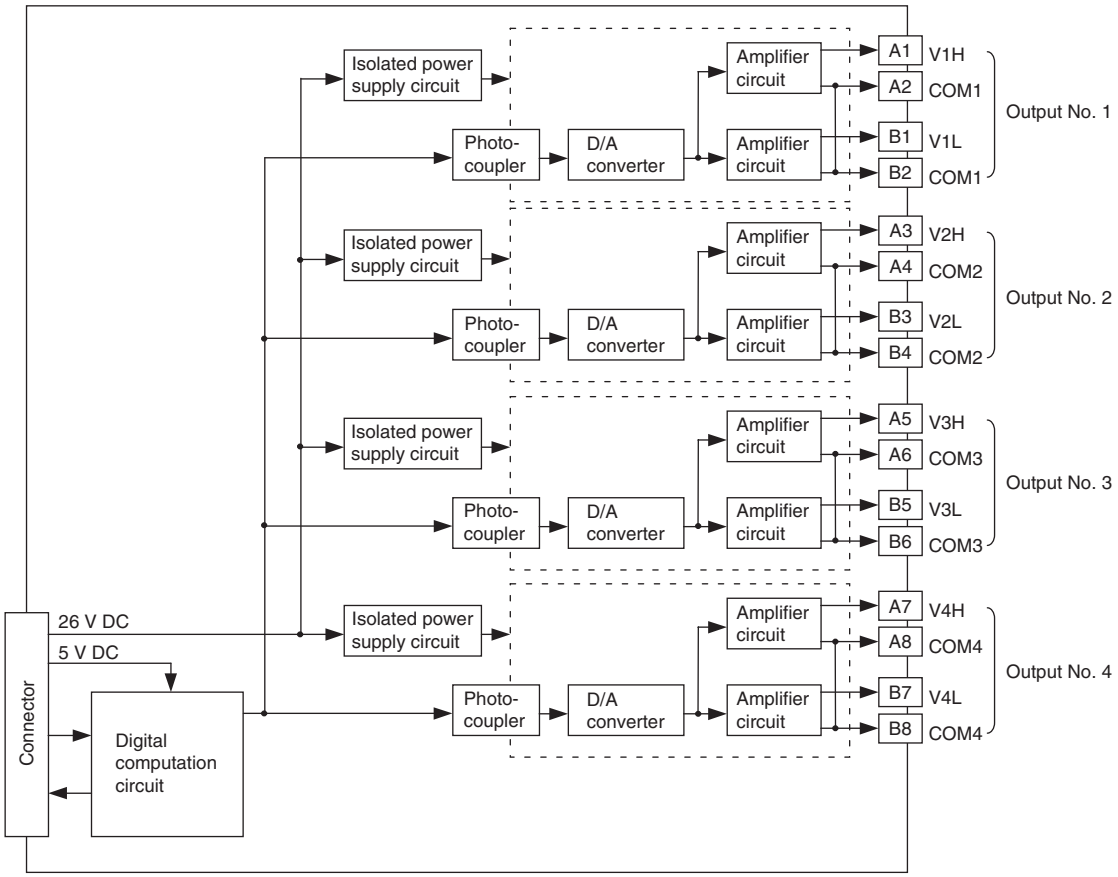

Nomenclature and Functions

CS1W-P□□0□/1□/51/52

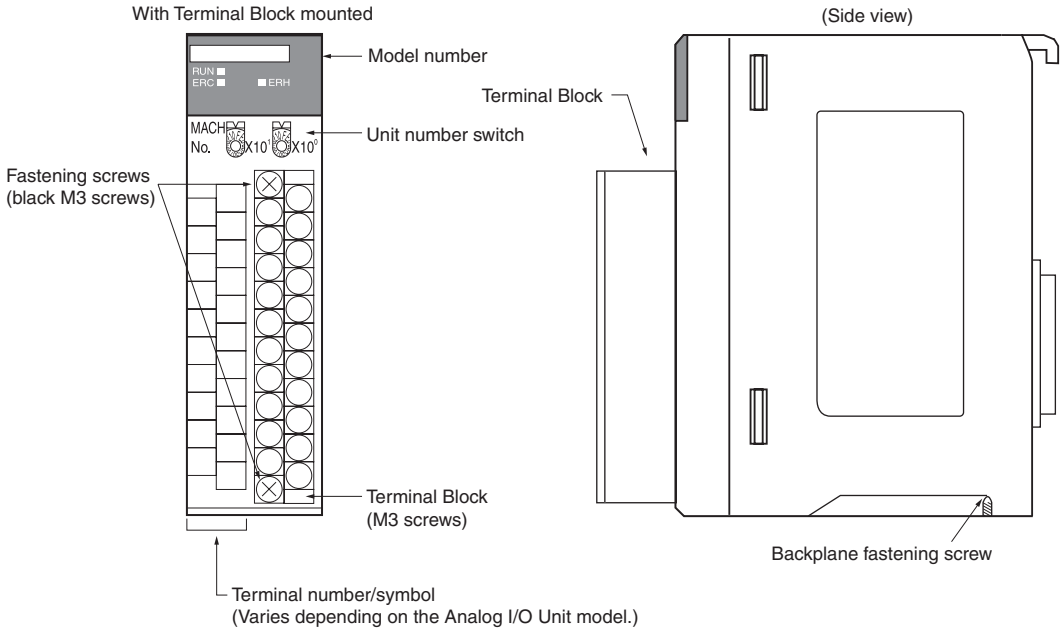

CS1W-PTS55/56, PDC55

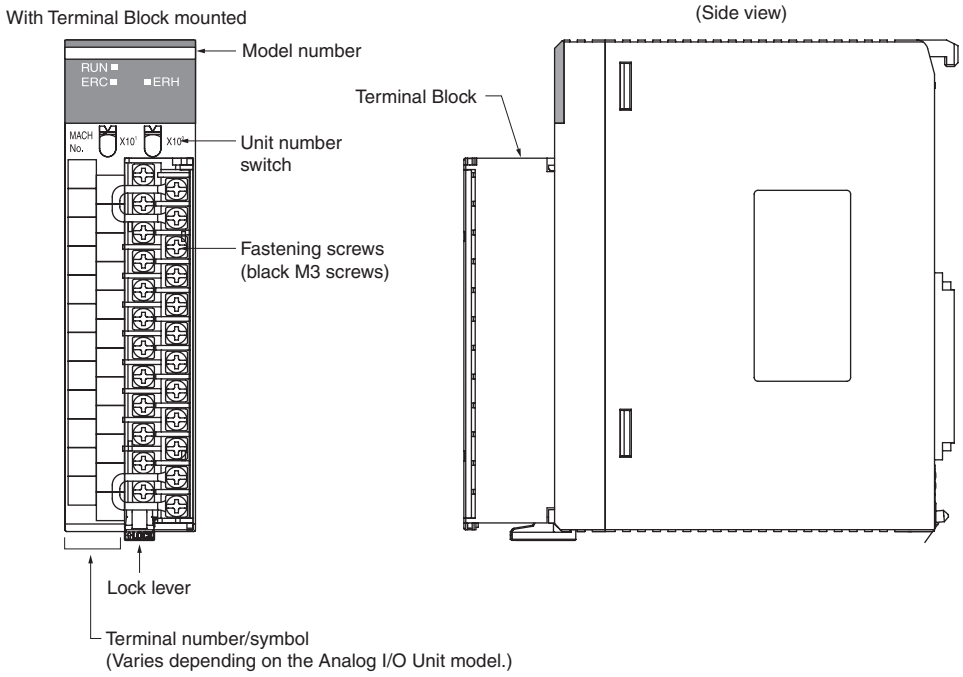

Front Panel LED Indicators

CS1W-P□□0□/1□

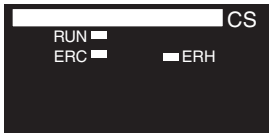

LED	Meaning	Indicator	Operating status
RUN (green)	Operating	Lit	Operating normally.
		Not lit	Unit has stopped exchanging data with the CPU Unit.
ERC (red)	Error detected by Unit	Lit	Data setting is out of range in the DM Area.
		Not lit	Operating normally.
ERH (red)	Error in the CPU Unit	Lit	Error has occurred during data exchange with the CPU Unit, or Analog I/O Unit's unit number is set incorrectly, or there is a mounting error.
		Not lit	Operating normally.

CS1W-PTS55/56, PDC55

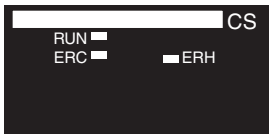

LED	Meaning	Indicator	Operating status
RUN (green)	Operating	Lit	Operating normally.
		Not lit	Unit has stopped exchanging data with the CPU Unit.
ERC (red)	Error detected by Unit	Lit	Sensor error has occurred or data setting is out of range in the DM Area.
		Not lit	Operating normally.
ERH (red)	Error in the CPU Unit	Lit	Error has occurred during data exchange with the CPU Unit, or Analog I/O Unit's unit number is set incorrectly, or there is a mounting error.
		Not lit	Operating normally.

CS1W-PTS51/52

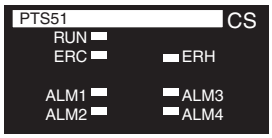

LED	Meaning	Indicator	Operating status
RUN (green)	Operating	Lit	Operating normally.
		Not lit	Unit has stopped exchanging data with the CPU Unit.
ERC (red)	Error detected by Unit	Lit	Sensor error has occurred or data setting is out of range in the DM Area.
		Not lit	Operating normally.
ERH (red)	Error in the CPU Unit	Lit	Error has occurred during data exchange with the CPU Unit, or Analog I/O Unit's unit number is set incorrectly, or there is a mounting error.
		Not lit	Operating normally.
ALM1 to ALM4 (yellow)	External alarm outputs	Lit	External alarm output ON
		Not lit	External alarm output OFF

Unit Number Switches

The CPU Unit and Analog Input Unit exchange data via words allocated to the Analog Input Unit as a Special I/O Unit. Words are allocated to Special I/O Units in both the CIO Area and the DM Area.
The words that each Analog I/O Unit uses are determined by the setting of the unit number switches on the front panel of the Unit.

Unit number switches

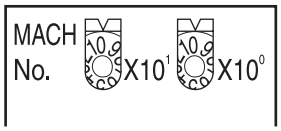

Unit No.	CIO Area addresses	DM Area addresses
0	CIO 2000 to CIO 2009	D20000 to D20099
1	CIO 2010 to CIO 2019	D20100 to D20199
2	CIO 2020 to CIO 2029	D20200 to D20299
3	CIO 2030 to CIO 2039	D20300 to D20399
4	CIO 2040 to CIO 2049	D20400 to D20499
5	CIO 2050 to CIO 2059	D20500 to D20599
6	CIO 2060 to CIO 2069	D20600 to D20699
7	CIO 2070 to CIO 2079	D20700 to D20799
8	CIO 2080 to CIO 2089	D20800 to D20899
9	CIO 2090 to CIO 2099	D20900 to D20999
10	CIO 2100 to CIO 2109	D21000 to D21099
to	to	to
n	CIO 2000 + n × 10 to CIO 2000 + n × 10 + 9	D20000 + n × 100 to D20000 + n × 100 + 99
to	to	to
95	CIO 2950 to CIO 2959	D29500 to D29599

Note: If two or more Special I/O Units are assigned the same unit number, a "UNIT No. DPL ERR" error (in the Programming Console) will occur (A401.13 will turn ON) and the PLC will not operate.

Dimensions

(Unit: mm)

CS1W-P□□0□/1□/51/52

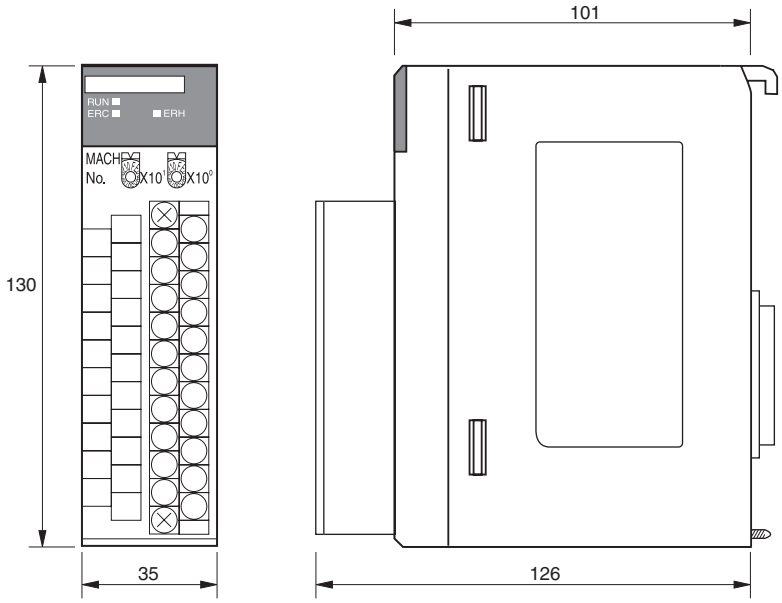

Terminal Block Dimensions

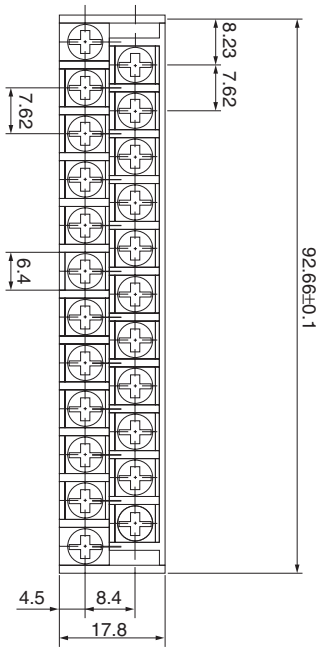

CS1W-PTS55/56/PDC55

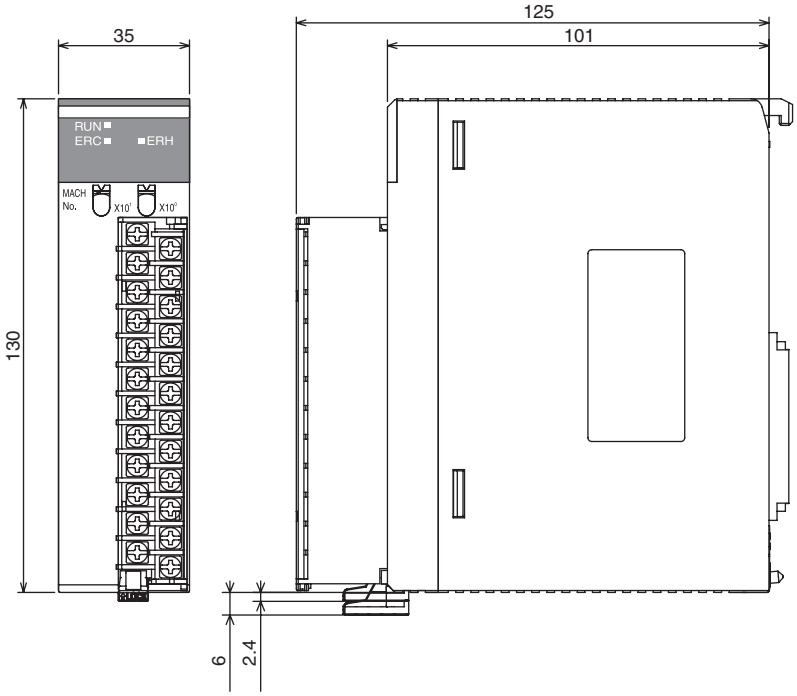

Terminal Block Dimensions

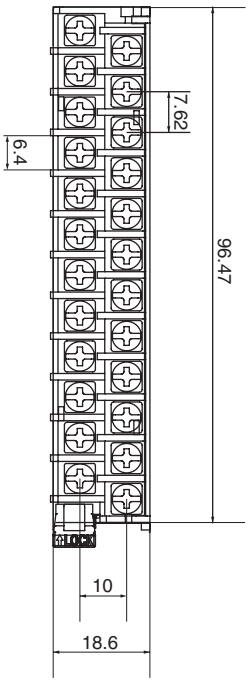

Related Manuals

Cat. No.	Model	Manual name	Application	Contents
W368	CS1W-PTS□□/ PTW□□/PDC□□/ PTR□□/PPS□□/ PMV□□ CJ1W-PTS□□/ PDC□□/PH41U	CS/CJ-series Analog I/O Units Operation Manual	Information on using the Analog I/O Units.	Provides information on using the CS/CJ-series Analog Input, Analog Output, and Analog I/O Units.
W446	WS02-CXPC1-EV7	CX-Programmer Operation Manual (Version 7.□)	Information on using the CX-Programmer (programming software for a personal computer running Windows).	Describes how to use the CX-Programmer.
W341	CQM1H-PRO01 CQM1-PRO01 C200H-PRO27 + CS1W-KS001	CS/CJ-series Programming Console Operation Manual	Information on using the Programming Console.	Describes how to use the Programming Console.

Read and Understand This Catalog

Please read and understand this catalog before purchasing the products. Please consult your OMRON representative if you have any questions or comments.

Warranty and Limitations of Liability

WARRANTY

OMRON's exclusive warranty is that the products are free from defects in materials and workmanship for a period of one year (or other period if specified) from date of sale by OMRON.

OMRON MAKES NO WARRANTY OR REPRESENTATION, EXPRESS OR IMPLIED, REGARDING NON-INFRINGEMENT, MERCHANTABILITY, OR FITNESS FOR PARTICULAR PURPOSE OF THE PRODUCTS. ANY BUYER OR USER ACKNOWLEDGES THAT THE BUYER OR USER ALONE HAS DETERMINED THAT THE PRODUCTS WILL SUITABLY MEET THE REQUIREMENTS OF THEIR INTENDED USE. OMRON DISCLAIMS ALL OTHER WARRANTIES, EXPRESS OR IMPLIED.

LIMITATIONS OF LIABILITY

OMRON SHALL NOT BE RESPONSIBLE FOR SPECIAL, INDIRECT, OR CONSEQUENTIAL DAMAGES, LOSS OF PROFITS OR COMMERCIAL LOSS IN ANY WAY CONNECTED WITH THE PRODUCTS, WHETHER SUCH CLAIM IS BASED ON CONTRACT, WARRANTY, NEGLIGENCE, OR STRICT LIABILITY.

In no event shall the responsibility of OMRON for any act exceed the individual price of the product on which liability is asserted.

IN NO EVENT SHALL OMRON BE RESPONSIBLE FOR WARRANTY, REPAIR, OR OTHER CLAIMS REGARDING THE PRODUCTS UNLESS OMRON'S ANALYSIS CONFIRMS THAT THE PRODUCTS WERE PROPERLY HANDLED, STORED, INSTALLED, AND MAINTAINED AND NOT SUBJECT TO CONTAMINATION, ABUSE, MISUSE, OR INAPPROPRIATE MODIFICATION OR REPAIR.

Application Considerations

SUITABILITY FOR USE

OMRON shall not be responsible for conformity with any standards, codes, or regulations that apply to the combination of products in the customer's application or use of the products.

At the customer's request, OMRON will provide applicable third party certification documents identifying ratings and limitations of use that apply to the products. This information by itself is not sufficient for a complete determination of the suitability of the products in combination with the end product, machine, system, or other application or use.

The following are some examples of applications for which particular attention must be given. This is not intended to be an exhaustive list of all possible uses of the products, nor is it intended to imply that the uses listed may be suitable for the products:

- Outdoor use, uses involving potential chemical contamination or electrical interference, or conditions or uses not described in this catalog.
- Nuclear energy control systems, combustion systems, railroad systems, aviation systems, medical equipment, amusement machines, vehicles, safety equipment, and installations subject to separate industry or government regulations.
- Systems, machines, and equipment that could present a risk to life or property.

Please know and observe all prohibitions of use applicable to the products.

NEVER USE THE PRODUCTS FOR AN APPLICATION INVOLVING SERIOUS RISK TO LIFE OR PROPERTY WITHOUT ENSURING THAT THE SYSTEM AS A WHOLE HAS BEEN DESIGNED TO ADDRESS THE RISKS, AND THAT THE OMRON PRODUCTS ARE PROPERLY RATED AND INSTALLED FOR THE INTENDED USE WITHIN THE OVERALL EQUIPMENT OR SYSTEM.

PROGRAMMABLE PRODUCTS

OMRON shall not be responsible for the user's programming of a programmable product, or any consequence thereof.

Disclaimers

CHANGE IN SPECIFICATIONS

Product specifications and accessories may be changed at any time based on improvements and other reasons.

It is our practice to change model numbers when published ratings or features are changed, or when significant construction changes are made. However, some specifications of the products may be changed without any notice. When in doubt, special model numbers may be assigned to fix or establish key specifications for your application on your request. Please consult with your OMRON representative at any time to confirm actual specifications of purchased products.

DIMENSIONS AND WEIGHTS

Dimensions and weights are nominal and are not to be used for manufacturing purposes, even when tolerances are shown.

PERFORMANCE DATA

Performance data given in this catalog is provided as a guide for the user in determining suitability and does not constitute a warranty. It may represent the result of OMRON's test conditions, and the users must correlate it to actual application requirements. Actual performance is subject to the OMRON Warranty and Limitations of Liability.

ERRORS AND OMISSIONS

The information in this document has been carefully checked and is believed to be accurate; however, no responsibility is assumed for clerical, typographical, or proofreading errors, or omissions.

2008.11

In the interest of product improvement, specifications are subject to change without notice.

OMRON Corporation
Industrial Automation Company

http://www.ia.omron.com/

(c)Copyright OMRON Corporation 2008 All Right Reserved.

Общество с ограниченной ответственностью «МосЧип» ИНН 7719860671 / КПП 771901001
Адрес: 105318, г.Москва, ул.Щербаковская д.3, офис 1107

Данный компонент на территории Российской Федерации

Вы можете приобрести в компании MosChip.

Для оперативного оформления запроса Вам необходимо перейти по данной ссылке:

http://moschip.ru/get-element

Вы можете разместить у нас заказ для любого Вашего проекта, будь то серийное производство или разработка единичного прибора.

В нашем ассортименте представлены ведущие мировые производители активных и пассивных электронных компонентов.

Нашей специализацией является поставка электронной компонентной базы двойного назначения, продукции таких производителей как XILINX, Intel (ex.ALTERA), Vicor, Microchip, Texas Instruments, Analog Devices, Mini-Circuits, Amphenol, Glenair.

Сотрудничество с глобальными дистрибьюторами электронных компонентов, предоставляет возможность заказывать и получать с международных складов практически любой перечень компонентов в оптимальные для Вас сроки.

На всех этапах разработки и производства наши партнеры могут получить квалифицированную поддержку опытных инженеров.

Система менеджмента качества компании отвечает требованиям в соответствии с ГОСТ Р ИСО 9001, ГОСТ РВ 0015-002 и ЭС РД 009

Офис по работе с юридическими лицами:

105318, г.Москва, ул.Щербаковская д.3, офис 1107, 1118, ДЦ «Щербаковский»

Телефон: +7 495 668-12-70 (многоканальный)

Факс: +7 495 668-12-70 (доб.304)

E-mail: info@moschip.ru

Skype отдела продаж:
moschip.ru
moschip.ru_4
moschip.ru_6
moschip.ru_9