# “ZNR” Transient/Surge Absorbers, For Thyristor Protection
# Type: E
# Type: J

Type E

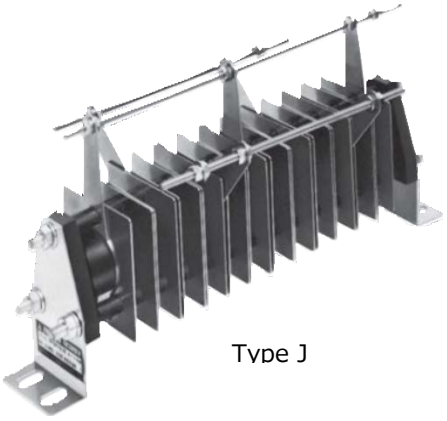

Type J

“ZNR” Transient/Surge Absorber for thyristors is especially designed to protect SCR power controllers and SCR power sources from high energy transient over voltages.
The ZNR is smaller in size and excellent in the clamping voltage characteristics as compared with a conventional selenium surge absorber.
Type E is for relatively low handling capacity of trans-former and Type J is for heavy duty use.

- RoHS compliant

## Recommended Applications

- Surge protection of SCR✻ power controllers
- Surge protection of SCR✻ power sources
  ✻ SCR = Silicone Controlled Rectifiers

Note : Ask our factory for Product Specification before use.

### ■ As for Handling Precautions and Minimum Quantity / Packing Unit
Please see Related Information

# "ZNR" Transient/Surge Absorbers, Type E

## Ratings and Characteristics(Type E)

- Operating Temperature Range : -40 to 85 ℃
- Storage Temperature Range : -40 to 110 ℃

| Part No. | Varistor Voltage | Maximum Allowable Voltage | | Maximum Clamping Voltage | | Impulse Life (2 ms, $10^4$ times) | Commutation Surge Ratio |
|---|---|---|---|---|---|---|---|
| | $V_{1\,mA}$(V) | ACrms(V) | DC(V) | $V_{Ip}$(V) | Ip(A) | (A) | — |
| ERZC20EK511P | 498 to 542 | 242 | 342 | 760 | 10 | 10 | 1.45 |
| ERZC20EK541P | 523 to 560 | 264 | 373 | 785 | | | 1.40 |
| ERZC20EK681P | 630 to 678 | 330 | 467 | 950 | | | 1.35 |
| ERZC20EK821P | 788 to 848 | 412 | 583 | 1185 | | | 1.35 |
| ERZC20EK911P | 840 to 904 | 440 | 622 | 1265 | | | 1.35 |
| ERZC20EK102P | 945 to 1017 | 495 | 700 | 1425 | | | 1.35 |
| ERZC20EK112P | 1051 to 1181 | 550 | 775 | 1655 | | | 1.35 |
| ERZC32EK511P | 498 to 542 | 242 | 342 | 760 | 20 | 20 | 1.45 |
| ERZC32EK541P | 523 to 560 | 264 | 373 | 785 | | | 1.40 |
| ERZC32EK681P | 630 to 678 | 330 | 467 | 950 | | | 1.35 |
| ERZC32EK821P | 788 to 848 | 412 | 583 | 1185 | | | 1.35 |
| ERZC32EK911P | 840 to 904 | 440 | 622 | 1265 | | | 1.35 |
| ERZC32EK102P | 945 to 1017 | 495 | 700 | 1425 | | | 1.35 |
| ERZC32EK112P | 1051 to 1181 | 550 | 775 | 1655 | | | 1.35 |

## Dimensions in mm (not to scale) (Type E)

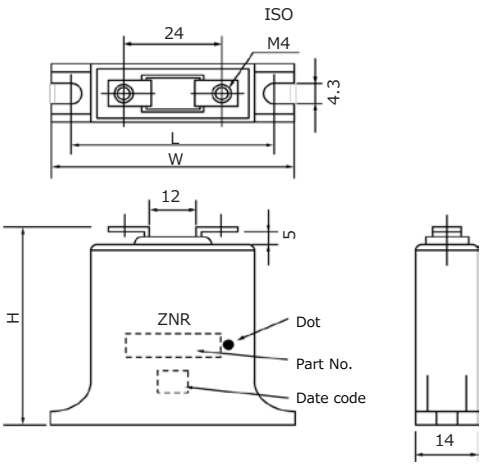


| Part No. | W | H | L |
|---|---|---|---|
| ERZC20EK□□□P | 48±1 | 42±1 | 39±1 |
| ERZC32EK□□□P | 60±1 | 55±1 | 51±1 |

# "ZNR" Transient/Surge Absorbers, Type J

## Dimensions in mm (not to scale) (Type J)

Style (1)

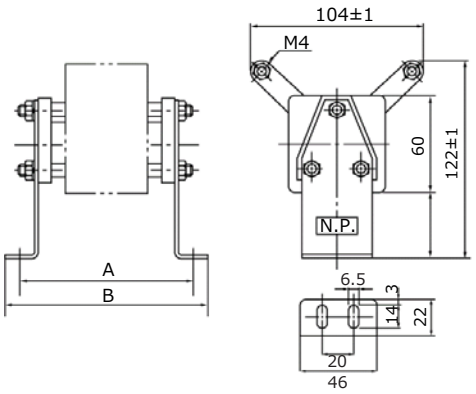


Style (2)

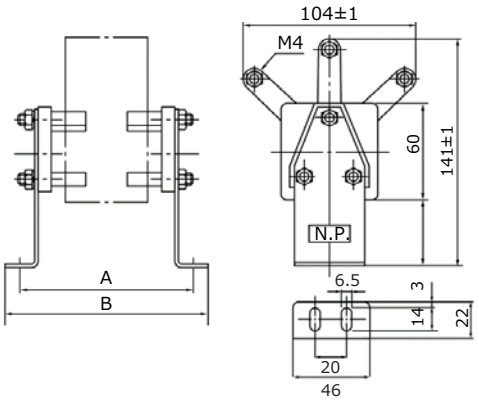


## Ratings and Characteristics(Type J)

- Operating Temperature Range : -40 to 70 ℃
- Storage Temperature Range : -40 to 110 ℃

| Part No. | Connection | Maximum Allowable Voltage | | Maximum Clamping Voltage | | Impulse Life (2 ms, $10^4$ times) | Commutation Surge Ratio | Dimensions in mm | | | |
|---|---|---|---|---|---|---|---|---|---|---|---|
| | | Acrms (V) | DC (V) | $V_{lp}$ (V) | lp (A) | (A) | | Style | A | B | C |
| ERZU11JP511 | Single | 242 | 342 | 760 | 40 | 40 | 1.45 | (1) | 88 | 108 | 20 |
| ERZU12JP511 | | | | | 70 | 70 | | | 104 | 124 | |
| ERZU13JP511 | | | | | 95 | 95 | | | 121 | 141 | |
| ERZU14JP511 | | | | | 125 | 125 | | | 138 | 158 | |
| ERZU15JP511 | | | | | 150 | 150 | | | 155 | 175 | |
| ERZU16JP511 | | | | | 180 | 180 | | | 172 | 192 | |
| ERZU17JP511 | | | | | 210 | 210 | | | 189 | 209 | |
| ERZU11JP511B | Delta | 242 | — | 760 | 40 | 40 | 1.45 | (2) | 120 | 140 | 20 |
| ERZU12JP511B | | | | | 70 | 70 | | | 169 | 189 | |
| ERZU13JP511B | | | | | 95 | 95 | | | 219 | 239 | |
| ERZU14JP511B | | | | | 125 | 125 | | | 260 | 280 | |
| ERZU11JP541 | Single | 264 | 373 | 785 | 40 | 40 | 1.40 | (1) | 88 | 108 | 20 |
| ERZU12JP541 | | | | | 70 | 70 | | | 105 | 125 | |
| ERZU13JP541 | | | | | 95 | 95 | | | 122 | 142 | |
| ERZU14JP541 | | | | | 125 | 125 | | | 139 | 159 | |
| ERZU15JP541 | | | | | 150 | 150 | | | 156 | 176 | |
| ERZU16JP541 | | | | | 180 | 180 | | | 172 | 192 | |
| ERZU17JP541 | | | | | 210 | 210 | | | 189 | 209 | |
| ERZU11JP541B | Delta | 264 | — | 785 | 40 | 40 | 1.40 | (2) | 121 | 141 | 20 |
| ERZU12JP541B | | | | | 70 | 70 | | | 171 | 191 | |
| ERZU13JP541B | | | | | 95 | 95 | | | 221 | 241 | |
| ERZU14JP541B | | | | | 125 | 125 | | | 270 | 290 | |

Design and specifications are each subject to change without notice. Ask factory for the current technical specifications before purchase and/or use.
Should a safety concern arise regarding this product, please be sure to contact us immediately.

# "ZNR" Transient/Surge Absorbers (Type E/J)

| Part No. | Connection | Maximum Allowable Voltage | | Maximum Clamping Voltage | | Impulse Life (2 ms, $10^4$ times) | Commutation Surge Ratio | Dimensions in mm | | | |
|---|---|---|---|---|---|---|---|---|---|---|---|
| | | Acrms (V) | DC (V) | $V_{lp}$ (V) | lp (A) | (A) | | Style | A | B | C |
| ERZU21JP102 | Single | 484 | 684 | 1520 | 40 | 40 | 1.45 | (1) | 102 | 122 | 20 |
| ERZU22JP102 | | | | | 70 | 70 | | | 135 | 155 | |
| ERZU23JP102 | | | | | 95 | 95 | | | 168 | 188 | |
| ERZU24JP102 | | | | | 125 | 125 | | | 199 | 219 | |
| ERZU25JP102 | | | | | 150 | 150 | | | 230 | 250 | |
| ERZU26JP102 | | | | | 180 | 180 | | | 261 | 281 | |
| ERZU21JP102B | Delta | 484 | — | 1520 | 40 | 40 | 1.45 | (2) | 166 | 186 | 20 |
| ERZU22JP102B | | | | | 70 | 70 | | | 261 | 281 | |
| ERZU21JP112 | Single | 528 | 746 | 1570 | 40 | 40 | 1.40 | (1) | 103 | 123 | 20 |
| ERZU22JP112 | | | | | 70 | 70 | | | 136 | 156 | |
| ERZU23JP112 | | | | | 95 | 95 | | | 169 | 189 | |
| ERZU24JP112 | | | | | 125 | 125 | | | 200 | 220 | |
| ERZU25JP112 | | | | | 150 | 150 | | | 232 | 252 | |
| ERZU26JP112 | | | | | 180 | 180 | | | 264 | 284 | |
| ERZU21JP112B | Delta | 528 | — | 1570 | 40 | 40 | 1.40 | (2) | 168 | 188 | 20 |
| ERZU22JP112B | | | | | 70 | 70 | | | 264 | 284 | |
| ERZU21JP132F | Single | 660 | 933 | 1900 | 40 | 40 | 1.35 | (1) | 149 | 169 | 40 |
| ERZU22JP132F | | | | | 70 | 70 | | | 182 | 202 | |
| ERZU23JP132F | | | | | 95 | 95 | | | 214 | 234 | |
| ERZU24JP132F | | | | | 125 | 125 | | | 246 | 266 | |
| ERZU25JP132F | | | | | 150 | 150 | | | 278 | 298 | |
| ERZU26JP132F | | | | | 180 | 180 | | | 310 | 330 | |
| ERZU21JP132H | Delta | 660 | — | 1900 | 40 | 40 | 1.35 | (2) | 213 | 233 | 40 |
| ERZU22JP132H | | | | | 70 | 70 | | | 309 | 329 | |
| ERZU21JP162F | Single | 825 | 1167 | 2375 | 40 | 40 | 1.35 | (1) | 150 | 170 | 40 |
| ERZU22JP162F | | | | | 70 | 70 | | | 184 | 204 | |
| ERZU23JP162F | | | | | 95 | 95 | | | 218 | 238 | |
| ERZU24JP162F | | | | | 125 | 125 | | | 252 | 272 | |
| ERZU25JP162F | | | | | 150 | 150 | | | 286 | 306 | |
| ERZU26JP162F | | | | | 180 | 180 | | | 320 | 340 | |
| ERZU21JP162H | Delta | 825 | — | 2375 | 40 | 40 | 1.35 | (2) | 217 | 237 | 40 |
| ERZU22JP162H | | | | | 70 | 70 | | | 317 | 337 | |
| ERZU21JP192F | Single | 990 | 1400 | 2850 | 40 | 40 | 1.35 | (1) | 152 | 172 | 40 |
| ERZU22JP192F | | | | | 70 | 70 | | | 187 | 207 | |
| ERZU23JP192F | | | | | 95 | 95 | | | 222 | 242 | |
| ERZU24JP192F | | | | | 125 | 125 | | | 257 | 277 | |
| ERZU25JP192F | | | | | 150 | 150 | | | 292 | 312 | |
| ERZU26JP192F | | | | | 180 | 180 | | | 327 | 347 | |
| ERZU21JP192H | Delta | 990 | — | 2850 | 40 | 40 | 1.35 | (2) | 222 | 242 | 40 |
| ERZU22JP192H | | | | | 70 | 70 | | | 327 | 347 | |
| ERZU21JP222F | Single | 1100 | 1550 | 3325 | 40 | 40 | 1.35 | (1) | 154 | 174 | 40 |
| ERZU22JP222F | | | | | 70 | 70 | | | 190 | 210 | |
| ERZU23JP222F | | | | | 95 | 95 | | | 227 | 247 | |
| ERZU24JP222F | | | | | 125 | 125 | | | 264 | 284 | |
| ERZU21JP222H | Delta | 1100 | — | 3325 | 40 | 40 | 1.35 | (2) | 227 | 247 | 40 |
| ERZU31JP252F | Single | 1320 | 1867 | 3800 | 40 | 40 | 1.35 | (1) | 167 | 187 | 40 |
| ERZU32JP252F | | | | | 70 | 70 | | | 218 | 238 | |
| ERZU33JP252F | | | | | 95 | 95 | | | 269 | 289 | |
| ERZU34JP252F | | | | | 125 | 125 | | | 320 | 340 | |
| ERZU31JP252H | Delta | 1320 | — | 3800 | 40 | 40 | 1.35 | (2) | 266 | 288 | 40 |

Design and specifications are each subject to change without notice. Ask factory for the current technical specifications before purchase and/or use.
Should a safety concern arise regarding this product, please be sure to contact us immediately.

# Guidelines and precautions regarding the technical information and use of our products described in this online catalog.

- If you want to use our products described in this online catalog for applications requiring special qualities or reliability, or for applications where the failure or malfunction of the products may directly jeopardize human life or potentially cause personal injury (e.g. aircraft and aerospace equipment, traffic and transportation equipment, combustion equipment, medical equipment, accident prevention, anti-crime equipment, and/or safety equipment), it is necessary to verify whether the specifications of our products fit to such applications. Please ensure that you will ask and check with our inquiry desk as to whether the specifications of our products fit to such applications use before you use our products.

- The quality and performance of our products as described in this online catalog only apply to our products when used in isolation. Therefore, please ensure you evaluate and verify our products under the specific circumstances in which our products are assembled in your own products and in which our products will actually be used.

- If you use our products in equipment that requires a high degree of reliability, regardless of the application, it is recommended that you set up protection circuits and redundancy circuits in order to ensure safety of your equipment.

- The products and product specifications described in this online catalog are subject to change for improvement without prior notice. Therefore, please be sure to request and confirm the latest product specifications which explain the specifications of our products in detail, before you finalize the design of your applications, purchase, or use our products.

- The technical information in this online catalog provides examples of our products' typical operations and application circuits. We do not guarantee the non-infringement of third party's intellectual property rights and we do not grant any license, right, or interest in our intellectual property.

- If any of our products, product specifications and/or technical information in this online catalog is to be exported or provided to non-residents, the laws and regulations of the exporting country, especially with regard to security and export control, shall be observed.

# <Regarding the Certificate of Compliance with the EU RoHS Directive/REACH Regulations>

- The switchover date for compliance with the RoHS Directive/REACH Regulations varies depending on the part number or series of our products.

- When you use the inventory of our products for which it is unclear whether those products are compliant with the RoHS Directive/REACH Regulation, please select "Sales Inquiry" in the website inquiry form and contact us.

**We do not take any responsibility for the use of our products outside the scope of the specifications, descriptions, guidelines and precautions described in this online catalog.**

# "ZNR" Transient/Surge Absorbers, Type P/J/G
# "ZNR" Transient/Surge Absorbers Units
# "ZNR" Transient/Surge Absorbers, For Thyristor Protection Type E/J

## Handling Precautions

## ⚠ Safety Precautions

In case that a ZNR Surge Absorber (hereafter referred to as the ZNR, or product name) is used, if an abnormality takes place because of peripheral conditions of the ZNR(material, environments, power source conditions, circuit conditions, etc. in equipment design), fire, electric shock, burn, or product failure may be occur. The precautions for this product are described below, understand the content thoroughly before usage. For more questions, contact us.
If there's any uncertainty/doubt/products safety items, please contact us. When a dogma shall be occurred about safety for this products, be sure to inform us rapidly, operate your technical examination.

### 1. ⚠ Operating Conditions precautions to be strictly observed

**1.1 Confirmation of performance ratings**

Use the ZNR within its rated range of performance such as the Max. allowable voltage, withstanding surge current, withstanding energy, impulse life(surge life), average pulse power, and operating temperature range. If used outside the range, the ZNR can be degrade and have element fracture, which may result in smoking and ignition.

**1.2 To avoid accidents due to unexpected phenomena, take the following measures**

1) Across-the-line use
   (1) When the ZNR is used across a line, put a current fuse in series with the ZNR .
   (2) ZNR Surge Absorbers Type P has a built-in thermal fuse, however, since the breaking capacity is low (0.3A), put a current fuse in series with ZNR.
2) Use between line to ground
   (1) If the case that the ZNR is used between a line to the ground, the short-circuit of the ZNR may not blow the current fuse because of grounding resistance, which may cause smoking and ignition of the ZNR's exterior resin.
   As the measure against it, install an earth leakage breaker on the power supply side of the ZNR position. If no earth leakage breaker is installed, use a thermal fuse together wth a current fuse in series.
   (2) If the case that the ZNR is used between a live part to metal case, an electric shock may develop at a shortcircuit of the ZNR ; hence, ground the metal case to the ground or keep it from the human body.
3) In the event of fracture of the ZNR, its pieces may scatter ; hence, put the case or cover of the set product in place.
4) Do not install the ZNR near combustible substances(polyvinyl chloride wires, resin moldings, etc.). If it is difficult to do, install a nonflammable cover.

**1.3 The live part shall be equipped with a protective cover for preventing electric shock.**

**1.4 If ZNR is shorted out and happen smoke or ignition, please cut provided current to ZNR immediately.**

### 2. Application notes

**2.1 Pay attention to the following items to avoid the shortened life and failure of the ZNR**

1) Circuit conditions
   (1) Select a ZNR of which the maximum voltage including fluctuations in source voltage allows for the maximum permissible circuit voltage.
   (2) In cases that surges are intermittently applied at short intervals (for example, in the case that the voltage of the noise simulator test is impressed), do not cause them to exceed the ZNR's rated pulse power.
   (3) ZNR Surge Absorber Units for a power supply, use the specified power distribution system.
   (4) Turn off the breaker (or knife switch) built in ZNR Surge Absorber Units before conducting an insulation resistance test or withstand voltage test on the circuit to which the ZNR Surge Absorber Units is connected. For ZNR Surge Absorber Units that do not have a built-in breaker (or knife switch), remove them from the circuit and test.

2) Operating environments
(1) The ZNR is designed and manufactured for application in general purpose electronic devices. The ZNR shall not be exposed to the weather, except for usage inside unit.
(2) Do not use the ZNR in places exposed to temperatures beyond the operating temperature range, such as places exposed to sunlight and vicinities of heating equipment.
(3) Do not use the ZNR in places exposed to high temperatures and high humidity, such as places exposed directly to rain, wind, dew condensation, and vapor.
(4) Do not use the ZNR in dusty and salinity environment and atmospheres polluted by corrosive gases, in liquids such as water, oil, chemical, organic solvent.
3) Processing conditions
(1) Do not wash the ZNR by such solvents(thinner, acetone, etc.) as its exterior resin deteriorates.
(2) Do not apply a strong vibration or shock (by falling, etc.) to the ZNR, cracking to its exterior resin and element may occur.
(3) When coating the ZNR with resin(including molding), do not use such resin.
(4) Do not bend the ZNR lead wires at the position close to its ZNR exterior resin, or apply external force to the position.
(5) When soldering the ZNR lead wires, follow the recommended condition and do not melt the solder and insulating materials constituting the ZNR.
(6) Keep the wiring of the ZNR as short and straight as possible.
4) Long-term storage
(1) Do not store the ZNR under high temperature and high humidity. Store it indoor environment at a temperature up to 40 °C and at humidity below 75 %RH, and use it within two years.
Before using the ZNR that has been stored for a long period(two years or longer), confirm the solderability.
(2) Avoid atmospheres full of corrosive gases (hydrogen sulfide, sulfurous acid, chlorine, ammonia, etc.).
(3) Avoid direct sunlight and dew condensation.
5) Maintenance inspection
We recommend that you perform maintenance inspections every two years and measure the varistor voltage. The ZNR replacement period is when the varistor voltage (V1mA) exceeds ± 10% from the initial value.

## 3. Notices

3.1 In cases that the ZNR is used in equipment (aerospace equipment, medical equipment, etc.) requiring extremely high reliability, ask us for selection of part No., and protection coordination, etc. in advance.
3.2 There is possibility that the ZNR will unexpectedly smoke or ignite because of abnormal rise of the circuit voltage and invasion of excessive surge. To prevent that accident from spreading over the equipment and not to expand the damage, use multiplex protection such as the adoption of frame-retardant materials for housing parts and structural parts.
3.3. We don't bear any responsibility for product malfunction or abnormal conditions which caused by using beyond the descriptions in this product specification.
3.4 Package marking includes the product number, quantity, and country of origin. As a rule, country of origin should be indicated in English.

## 4. Applicable laws and regulations , others

4.1 This product not been manufactured with any ozone depleting chemical controlled under the Montreal Protocol.
4.1 Specified brominated flame retardants (including PBB (polybromobiphenyl) and PBDE (polybromodiphenyl ether)) are not intentionally used in the components of this product.
4.3 This product comply with RoHS(Restriction of the use of certain Hazardous Substance in electrical and electronic equipment) (DIRECTIVE 2011/65/EU and 2015/863/EU).
*Exemption ZNR Surge Absorber Units (Part No. ERZAxxxxxxxx)
4.4 All the materials used in this part are registered material under the Law Concerning the Examination and Regulationof Manufacture, etc. of Chemical Substance.
4.5 If you need the notice by letter of "A preliminary judgement on the Laws of Japan foreign exchange and Foreign Trade Control", be sure to let us know.
4.6 These products are not dangerous goods on the transportation as identified by UN(United nations) numbers or UN classification.

## 5. Others

5.1 As to the disposal of ZNR, check the method of disposal in each country or origin where the ZNR are incorporated in your products to be used.

5.2 The technical information in this specification provides example of our products’ typical operations and application circuit. We do not guarantee the non-infringement of third party’s intellectual property rights and we do not grant any license, right or interest in our intellectual property.

# Mouser Electronics

Authorized Distributor

Click to View Pricing, Inventory, Delivery & Lifecycle Information:

Panasonic:

ERZ-C20EK241 ERZ-C32EK201 ERZ-C32EK911 ERZ-C32EK751 ERZ-C20EK201 ERZ-C20EK391 ERZ-C25EK391 ERZ-C25EK781 ERZ-C25EK821 ERZ-C32EK241 ERZ-C32EK391 ERZ-C20EK431 ERZ-C20EK471 ERZ-C20EK361 ERZ-C20EK201Y ERZ-C32EK102Y ERZ-C20EK911Y ERZ-C32EK361Y ERZ-C32EK271Y ERZ-C20EK511Y ERZ-C20EK781Y ERZ-C32EK821Y ERZ-C20EK391Y ERZ-C32EK112Y ERZ-C20EK751Y ERZ-C32EK621Y ERZ-C32EK911Y ERZ-C32EK241Y ERZ-C20EK471Y ERZ-C20EK821Y ERZ-C32EK201Y ERZ-C20EK361Y ERZ-C20EK271Y ERZ-C20EK112Y ERZ-C32EK781Y ERZ-C20EK241Y ERZ-C20EK431Y ERZ-C32EK391Y ERZ-C32EK471Y ERZ-C20EK102Y ERZ-C32EK511Y ERZ-C20EK681Y ERZ-C32EK751Y ERZ-C32EK431Y ERZ-C20EK621Y ERZ-C32EK681Y ERZ-C20EK221Y ERZ-C32EK221Y ERZ-U25JP112 ERZ-U16JP511 ERZ-U22JP162H ERZ-U24JP192F ERZ-U22JP102B ERZ-U25JP192F ERZ-U22JP132H ERZ-U26JP112 ERZ-U21JP102B ERZ-U22JP112B ERZ-U13JP541 ERZ-U25JP162F ERZ-U21JP162F ERZ-U21JP192H ERZ-U25JP132F ERZ-U23JP162F ERZ-U34JP252F ERZ-U26JP102 ERZ-U14JP541 ERZ-U22JP162F ERZ-U21JP112 ERZ-U24JP162F ERZ-U21JP102 ERZ-U21JP112B ERZ-U13JP541B ERZ-U12JP511 ERZ-U23JP132F ERZ-U15JP541 ERZ-U22JP222F ERZ-U22JP102 ERZ-U23JP112 ERZ-U14JP511B ERZ-U22JP192H ERZ-U16JP541 ERZ-U17JP511 ERZ-U11JP511 ERZ-U12JP541 ERZ-U22JP192F ERZ-U21JP162H ERZ-U23JP192F ERZ-U26JP162F ERZ-U15JP511 ERZ-U23JP102 ERZ-U13JP511 ERZ-U11JP541 ERZ-U11JP541B ERZ-U31JP252H ERZ-U24JP102 ERZ-U11JP511B ERZ-U25JP102 ERZ-U21JP132H ERZ-U12JP541B

Общество с ограниченной ответственностью «МосЧип» ИНН 7719860671 / КПП 771901001
Адрес: 105318, г.Москва, ул.Щербаковская д.3, офис 1107

**Данный компонент на территории Российской Федерации**

**Вы можете приобрести в компании MosChip.**

Для оперативного оформления запроса Вам необходимо перейти по данной ссылке:

http://moschip.ru/get-element

Вы можете разместить у нас заказ для любого Вашего проекта, будь то серийное производство или разработка единичного прибора.

В нашем ассортименте представлены ведущие мировые производители активных и пассивных электронных компонентов.

Нашей специализацией является поставка электронной компонентной базы двойного назначения, продукции таких производителей как XILINX, Intel (ex.ALTERA), Vicor, Microchip, Texas Instruments, Analog Devices, Mini-Circuits, Amphenol, Glenair.

Сотрудничество с глобальными дистрибьюторами электронных компонентов, предоставляет возможность заказывать и получать с международных складов практически любой перечень компонентов в оптимальные для Вас сроки.

На всех этапах разработки и производства наши партнеры могут получить квалифицированную поддержку опытных инженеров.

Система менеджмента качества компании отвечает требованиям в соответствии с ГОСТ Р ИСО 9001, ГОСТ РВ 0015-002 и ЭС РД 009

**Офис по работе с юридическими лицами:**

105318, г.Москва, ул.Щербаковская д.3, офис 1107, 1118, ДЦ «Щербаковский»

Телефон: +7 495 668-12-70 (многоканальный)

Факс: +7 495 668-12-70 (доб.304)

E-mail: info@moschip.ru

Skype отдела продаж:
moschip.ru
moschip.ru_4
moschip.ru_6
moschip.ru_9