“ZNR” Transient/Surge Absorbers, For Thyristor Protection
Type: E
Type: J

Type E

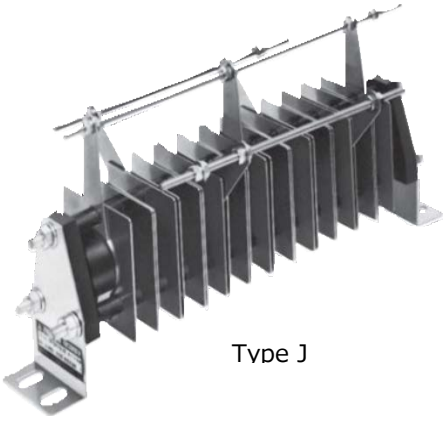

Type J

“ZNR” Transient/Surge Absorber for thyristors is especially designed to protect SCR power controllers and SCR power sources from high energy transient over voltages.
The ZNR is smaller in size and excellent in the clamping voltage characteristics as compared with a conventional selenium surge absorber.
Type E is for relatively low handling capacity of trans-former and Type J is for heavy duty use.

- RoHS compliant

Recommended Applications

- Surge protection of SCR✻ power controllers
- Surge protection of SCR✻ power sources
  ✻ SCR = Silicone Controlled Rectifiers

Note : Ask our factory for Product Specification before use.

■ As for Handling Precautions and Minimum Quantity / Packing Unit
Please see Related Information

"ZNR" Transient/Surge Absorbers, Type E

Ratings and Characteristics(Type E)

- Operating Temperature Range : -40 to 85 ℃
- Storage Temperature Range : -40 to 110 ℃

Part No.	Varistor Voltage	Maximum Allowable Voltage		Maximum Clamping Voltage		Impulse Life (2 ms, 10^4 times)	Commutation Surge Ratio
	$V_{1\,mA}$(V)	ACrms(V)	DC(V)	V_{Ip}(V)	Ip(A)	(A)	—
ERZC20EK511P	498 to 542	242	342	760	10	10	1.45
ERZC20EK541P	523 to 560	264	373	785			1.40
ERZC20EK681P	630 to 678	330	467	950			1.35
ERZC20EK821P	788 to 848	412	583	1185			1.35
ERZC20EK911P	840 to 904	440	622	1265			1.35
ERZC20EK102P	945 to 1017	495	700	1425			1.35
ERZC20EK112P	1051 to 1181	550	775	1655			1.35
ERZC32EK511P	498 to 542	242	342	760	20	20	1.45
ERZC32EK541P	523 to 560	264	373	785			1.40
ERZC32EK681P	630 to 678	330	467	950			1.35
ERZC32EK821P	788 to 848	412	583	1185			1.35
ERZC32EK911P	840 to 904	440	622	1265			1.35
ERZC32EK102P	945 to 1017	495	700	1425			1.35
ERZC32EK112P	1051 to 1181	550	775	1655			1.35

Dimensions in mm (not to scale) (Type E)

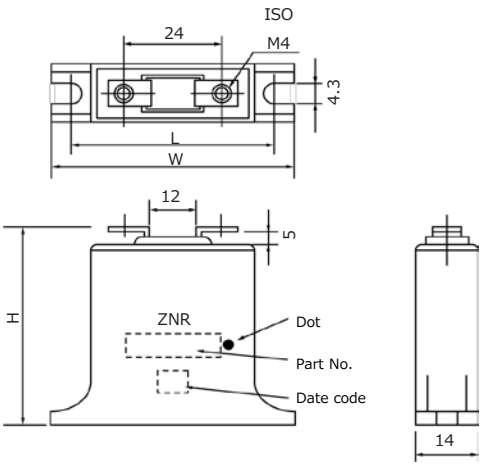

Part No.	W	H	L
ERZC20EK□□□P	48±1	42±1	39±1
ERZC32EK□□□P	60±1	55±1	51±1

"ZNR" Transient/Surge Absorbers, Type J

Dimensions in mm (not to scale) (Type J)

Style (1)

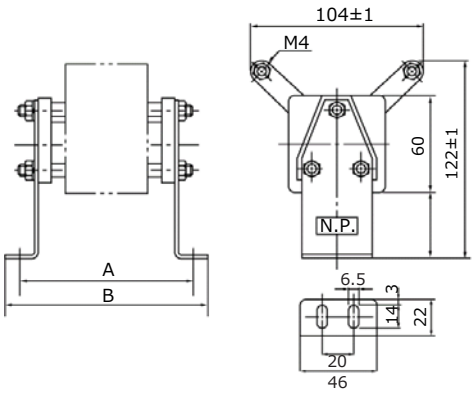

Style (2)

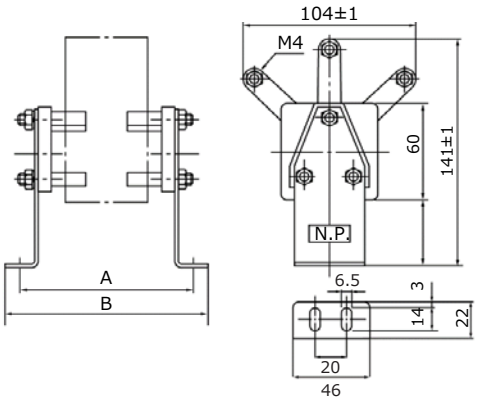

Ratings and Characteristics(Type J)

- Operating Temperature Range : -40 to 70 ℃
- Storage Temperature Range : -40 to 110 ℃

Part No.	Connection	Maximum Allowable Voltage		Maximum Clamping Voltage		Impulse Life (2 ms, 10^4 times)	Commutation Surge Ratio	Dimensions in mm			
		Acrms (V)	DC (V)	V_{lp} (V)	lp (A)	(A)		Style	A	B	C
ERZU11JP511	Single	242	342	760	40	40	1.45	(1)	88	108	20
ERZU12JP511					70	70			104	124	
ERZU13JP511					95	95			121	141	
ERZU14JP511					125	125			138	158	
ERZU15JP511					150	150			155	175	
ERZU16JP511					180	180			172	192	
ERZU17JP511					210	210			189	209	
ERZU11JP511B	Delta	242	—	760	40	40	1.45	(2)	120	140	20
ERZU12JP511B					70	70			169	189	
ERZU13JP511B					95	95			219	239	
ERZU14JP511B					125	125			260	280	
ERZU11JP541	Single	264	373	785	40	40	1.40	(1)	88	108	20
ERZU12JP541					70	70			105	125	
ERZU13JP541					95	95			122	142	
ERZU14JP541					125	125			139	159	
ERZU15JP541					150	150			156	176	
ERZU16JP541					180	180			172	192	
ERZU17JP541					210	210			189	209	
ERZU11JP541B	Delta	264	—	785	40	40	1.40	(2)	121	141	20
ERZU12JP541B					70	70			171	191	
ERZU13JP541B					95	95			221	241	
ERZU14JP541B					125	125			270	290	

Design and specifications are each subject to change without notice. Ask factory for the current technical specifications before purchase and/or use.
Should a safety concern arise regarding this product, please be sure to contact us immediately.

"ZNR" Transient/Surge Absorbers (Type E/J)

Part No.	Connection	Maximum Allowable Voltage		Maximum Clamping Voltage		Impulse Life (2 ms, 10^4 times)	Commutation Surge Ratio	Dimensions in mm			
		Acrms (V)	DC (V)	V_{lp} (V)	lp (A)	(A)		Style	A	B	C
ERZU21JP102	Single	484	684	1520	40	40	1.45	(1)	102	122	20
ERZU22JP102					70	70			135	155	
ERZU23JP102					95	95			168	188	
ERZU24JP102					125	125			199	219	
ERZU25JP102					150	150			230	250	
ERZU26JP102					180	180			261	281	
ERZU21JP102B	Delta	484	—	1520	40	40	1.45	(2)	166	186	20
ERZU22JP102B					70	70			261	281	
ERZU21JP112	Single	528	746	1570	40	40	1.40	(1)	103	123	20
ERZU22JP112					70	70			136	156	
ERZU23JP112					95	95			169	189	
ERZU24JP112					125	125			200	220	
ERZU25JP112					150	150			232	252	
ERZU26JP112					180	180			264	284	
ERZU21JP112B	Delta	528	—	1570	40	40	1.40	(2)	168	188	20
ERZU22JP112B					70	70			264	284	
ERZU21JP132F	Single	660	933	1900	40	40	1.35	(1)	149	169	40
ERZU22JP132F					70	70			182	202	
ERZU23JP132F					95	95			214	234	
ERZU24JP132F					125	125			246	266	
ERZU25JP132F					150	150			278	298	
ERZU26JP132F					180	180			310	330	
ERZU21JP132H	Delta	660	—	1900	40	40	1.35	(2)	213	233	40
ERZU22JP132H					70	70			309	329	
ERZU21JP162F	Single	825	1167	2375	40	40	1.35	(1)	150	170	40
ERZU22JP162F					70	70			184	204	
ERZU23JP162F					95	95			218	238	
ERZU24JP162F					125	125			252	272	
ERZU25JP162F					150	150			286	306	
ERZU26JP162F					180	180			320	340	
ERZU21JP162H	Delta	825	—	2375	40	40	1.35	(2)	217	237	40
ERZU22JP162H					70	70			317	337	
ERZU21JP192F	Single	990	1400	2850	40	40	1.35	(1)	152	172	40
ERZU22JP192F					70	70			187	207	
ERZU23JP192F					95	95			222	242	
ERZU24JP192F					125	125			257	277	
ERZU25JP192F					150	150			292	312	
ERZU26JP192F					180	180			327	347	
ERZU21JP192H	Delta	990	—	2850	40	40	1.35	(2)	222	242	40
ERZU22JP192H					70	70			327	347	
ERZU21JP222F	Single	1100	1550	3325	40	40	1.35	(1)	154	174	40
ERZU22JP222F					70	70			190	210	
ERZU23JP222F					95	95			227	247	
ERZU24JP222F					125	125			264	284	
ERZU21JP222H	Delta	1100	—	3325	40	40	1.35	(2)	227	247	40
ERZU31JP252F	Single	1320	1867	3800	40	40	1.35	(1)	167	187	40
ERZU32JP252F					70	70			218	238	
ERZU33JP252F					95	95			269	289	
ERZU34JP252F					125	125			320	340	
ERZU31JP252H	Delta	1320	—	3800	40	40	1.35	(2)	266	288	40

Design and specifications are each subject to change without notice. Ask factory for the current technical specifications before purchase and/or use.
Should a safety concern arise regarding this product, please be sure to contact us immediately.

Guidelines and precautions regarding the technical information and use of our products described in this online catalog.

- If you want to use our products described in this online catalog for applications requiring special qualities or reliability, or for applications where the failure or malfunction of the products may directly jeopardize human life or potentially cause personal injury (e.g. aircraft and aerospace equipment, traffic and transportation equipment, combustion equipment, medical equipment, accident prevention, anti-crime equipment, and/or safety equipment), it is necessary to verify whether the specifications of our products fit to such applications. Please ensure that you will ask and check with our inquiry desk as to whether the specifications of our products fit to such applications use before you use our products.

- The quality and performance of our products as described in this online catalog only apply to our products when used in isolation. Therefore, please ensure you evaluate and verify our products under the specific circumstances in which our products are assembled in your own products and in which our products will actually be used.

- If you use our products in equipment that requires a high degree of reliability, regardless of the application, it is recommended that you set up protection circuits and redundancy circuits in order to ensure safety of your equipment.

- The products and product specifications described in this online catalog are subject to change for improvement without prior notice. Therefore, please be sure to request and confirm the latest product specifications which explain the specifications of our products in detail, before you finalize the design of your applications, purchase, or use our products.

- The technical information in this online catalog provides examples of our products' typical operations and application circuits. We do not guarantee the non-infringement of third party's intellectual property rights and we do not grant any license, right, or interest in our intellectual property.

- If any of our products, product specifications and/or technical information in this online catalog is to be exported or provided to non-residents, the laws and regulations of the exporting country, especially with regard to security and export control, shall be observed.

<Regarding the Certificate of Compliance with the EU RoHS Directive/REACH Regulations>

- The switchover date for compliance with the RoHS Directive/REACH Regulations varies depending on the part number or series of our products.

- When you use the inventory of our products for which it is unclear whether those products are compliant with the RoHS Directive/REACH Regulation, please select "Sales Inquiry" in the website inquiry form and contact us.

We do not take any responsibility for the use of our products outside the scope of the specifications, descriptions, guidelines and precautions described in this online catalog.

"ZNR" Transient/Surge Absorbers, Type P/J/G
"ZNR" Transient/Surge Absorbers Units
"ZNR" Transient/Surge Absorbers, For Thyristor Protection Type E/J

Handling Precautions

⚠ Safety Precautions

In case that a ZNR Surge Absorber (hereafter referred to as the ZNR, or product name) is used, if an abnormality takes place because of peripheral conditions of the ZNR(material, environments, power source conditions, circuit conditions, etc. in equipment design), fire, electric shock, burn, or product failure may be occur. The precautions for this product are described below, understand the content thoroughly before usage. For more questions, contact us.
If there's any uncertainty/doubt/products safety items, please contact us. When a dogma shall be occurred about safety for this products, be sure to inform us rapidly, operate your technical examination.

1. ⚠ Operating Conditions precautions to be strictly observed

1.1 Confirmation of performance ratings

Use the ZNR within its rated range of performance such as the Max. allowable voltage, withstanding surge current, withstanding energy, impulse life(surge life), average pulse power, and operating temperature range. If used outside the range, the ZNR can be degrade and have element fracture, which may result in smoking and ignition.

1.2 To avoid accidents due to unexpected phenomena, take the following measures

1) Across-the-line use
   (1) When the ZNR is used across a line, put a current fuse in series with the ZNR .
   (2) ZNR Surge Absorbers Type P has a built-in thermal fuse, however, since the breaking capacity is low (0.3A), put a current fuse in series with ZNR.
2) Use between line to ground
   (1) If the case that the ZNR is used between a line to the ground, the short-circuit of the ZNR may not blow the current fuse because of grounding resistance, which may cause smoking and ignition of the ZNR's exterior resin.
   As the measure against it, install an earth leakage breaker on the power supply side of the ZNR position. If no earth leakage breaker is installed, use a thermal fuse together wth a current fuse in series.
   (2) If the case that the ZNR is used between a live part to metal case, an electric shock may develop at a shortcircuit of the ZNR ; hence, ground the metal case to the ground or keep it from the human body.
3) In the event of fracture of the ZNR, its pieces may scatter ; hence, put the case or cover of the set product in place.
4) Do not install the ZNR near combustible substances(polyvinyl chloride wires, resin moldings, etc.). If it is difficult to do, install a nonflammable cover.

1.3 The live part shall be equipped with a protective cover for preventing electric shock.

1.4 If ZNR is shorted out and happen smoke or ignition, please cut provided current to ZNR immediately.

2. Application notes

2.1 Pay attention to the following items to avoid the shortened life and failure of the ZNR

1) Circuit conditions
   (1) Select a ZNR of which the maximum voltage including fluctuations in source voltage allows for the maximum permissible circuit voltage.
   (2) In cases that surges are intermittently applied at short intervals (for example, in the case that the voltage of the noise simulator test is impressed), do not cause them to exceed the ZNR's rated pulse power.
   (3) ZNR Surge Absorber Units for a power supply, use the specified power distribution system.
   (4) Turn off the breaker (or knife switch) built in ZNR Surge Absorber Units before conducting an insulation resistance test or withstand voltage test on the circuit to which the ZNR Surge Absorber Units is connected. For ZNR Surge Absorber Units that do not have a built-in breaker (or knife switch), remove them from the circuit and test.

2) Operating environments
(1) The ZNR is designed and manufactured for application in general purpose electronic devices. The ZNR shall not be exposed to the weather, except for usage inside unit.
(2) Do not use the ZNR in places exposed to temperatures beyond the operating temperature range, such as places exposed to sunlight and vicinities of heating equipment.
(3) Do not use the ZNR in places exposed to high temperatures and high humidity, such as places exposed directly to rain, wind, dew condensation, and vapor.
(4) Do not use the ZNR in dusty and salinity environment and atmospheres polluted by corrosive gases, in liquids such as water, oil, chemical, organic solvent.
3) Processing conditions
(1) Do not wash the ZNR by such solvents(thinner, acetone, etc.) as its exterior resin deteriorates.
(2) Do not apply a strong vibration or shock (by falling, etc.) to the ZNR, cracking to its exterior resin and element may occur.
(3) When coating the ZNR with resin(including molding), do not use such resin.
(4) Do not bend the ZNR lead wires at the position close to its ZNR exterior resin, or apply external force to the position.
(5) When soldering the ZNR lead wires, follow the recommended condition and do not melt the solder and insulating materials constituting the ZNR.
(6) Keep the wiring of the ZNR as short and straight as possible.
4) Long-term storage
(1) Do not store the ZNR under high temperature and high humidity. Store it indoor environment at a temperature up to 40 °C and at humidity below 75 %RH, and use it within two years.
Before using the ZNR that has been stored for a long period(two years or longer), confirm the solderability.
(2) Avoid atmospheres full of corrosive gases (hydrogen sulfide, sulfurous acid, chlorine, ammonia, etc.).
(3) Avoid direct sunlight and dew condensation.
5) Maintenance inspection
We recommend that you perform maintenance inspections every two years and measure the varistor voltage. The ZNR replacement period is when the varistor voltage (V1mA) exceeds ± 10% from the initial value.

3. Notices

3.1 In cases that the ZNR is used in equipment (aerospace equipment, medical equipment, etc.) requiring extremely high reliability, ask us for selection of part No., and protection coordination, etc. in advance.
3.2 There is possibility that the ZNR will unexpectedly smoke or ignite because of abnormal rise of the circuit voltage and invasion of excessive surge. To prevent that accident from spreading over the equipment and not to expand the damage, use multiplex protection such as the adoption of frame-retardant materials for housing parts and structural parts.
3.3. We don't bear any responsibility for product malfunction or abnormal conditions which caused by using beyond the descriptions in this product specification.
3.4 Package marking includes the product number, quantity, and country of origin. As a rule, country of origin should be indicated in English.

4. Applicable laws and regulations , others

4.1 This product not been manufactured with any ozone depleting chemical controlled under the Montreal Protocol.
4.1 Specified brominated flame retardants (including PBB (polybromobiphenyl) and PBDE (polybromodiphenyl ether)) are not intentionally used in the components of this product.
4.3 This product comply with RoHS(Restriction of the use of certain Hazardous Substance in electrical and electronic equipment) (DIRECTIVE 2011/65/EU and 2015/863/EU).
*Exemption ZNR Surge Absorber Units (Part No. ERZAxxxxxxxx)
4.4 All the materials used in this part are registered material under the Law Concerning the Examination and Regulationof Manufacture, etc. of Chemical Substance.
4.5 If you need the notice by letter of "A preliminary judgement on the Laws of Japan foreign exchange and Foreign Trade Control", be sure to let us know.
4.6 These products are not dangerous goods on the transportation as identified by UN(United nations) numbers or UN classification.

5. Others

5.1 As to the disposal of ZNR, check the method of disposal in each country or origin where the ZNR are incorporated in your products to be used.

5.2 The technical information in this specification provides example of our products’ typical operations and application circuit. We do not guarantee the non-infringement of third party’s intellectual property rights and we do not grant any license, right or interest in our intellectual property.

Mouser Electronics

Authorized Distributor

Click to View Pricing, Inventory, Delivery & Lifecycle Information:

Panasonic:

ERZ-C20EK241 ERZ-C32EK201 ERZ-C32EK911 ERZ-C32EK751 ERZ-C20EK201 ERZ-C20EK391 ERZ-C25EK391 ERZ-C25EK781 ERZ-C25EK821 ERZ-C32EK241 ERZ-C32EK391 ERZ-C20EK431 ERZ-C20EK471 ERZ-C20EK361 ERZ-C20EK201Y ERZ-C32EK102Y ERZ-C20EK911Y ERZ-C32EK361Y ERZ-C32EK271Y ERZ-C20EK511Y ERZ-C20EK781Y ERZ-C32EK821Y ERZ-C20EK391Y ERZ-C32EK112Y ERZ-C20EK751Y ERZ-C32EK621Y ERZ-C32EK911Y ERZ-C32EK241Y ERZ-C20EK471Y ERZ-C20EK821Y ERZ-C32EK201Y ERZ-C20EK361Y ERZ-C20EK271Y ERZ-C20EK112Y ERZ-C32EK781Y ERZ-C20EK241Y ERZ-C20EK431Y ERZ-C32EK391Y ERZ-C32EK471Y ERZ-C20EK102Y ERZ-C32EK511Y ERZ-C20EK681Y ERZ-C32EK751Y ERZ-C32EK431Y ERZ-C20EK621Y ERZ-C32EK681Y ERZ-C20EK221Y ERZ-C32EK221Y ERZ-U25JP112 ERZ-U16JP511 ERZ-U22JP162H ERZ-U24JP192F ERZ-U22JP102B ERZ-U25JP192F ERZ-U22JP132H ERZ-U26JP112 ERZ-U21JP102B ERZ-U22JP112B ERZ-U13JP541 ERZ-U25JP162F ERZ-U21JP162F ERZ-U21JP192H ERZ-U25JP132F ERZ-U23JP162F ERZ-U34JP252F ERZ-U26JP102 ERZ-U14JP541 ERZ-U22JP162F ERZ-U21JP112 ERZ-U24JP162F ERZ-U21JP102 ERZ-U21JP112B ERZ-U13JP541B ERZ-U12JP511 ERZ-U23JP132F ERZ-U15JP541 ERZ-U22JP222F ERZ-U22JP102 ERZ-U23JP112 ERZ-U14JP511B ERZ-U22JP192H ERZ-U16JP541 ERZ-U17JP511 ERZ-U11JP511 ERZ-U12JP541 ERZ-U22JP192F ERZ-U21JP162H ERZ-U23JP192F ERZ-U26JP162F ERZ-U15JP511 ERZ-U23JP102 ERZ-U13JP511 ERZ-U11JP541 ERZ-U11JP541B ERZ-U31JP252H ERZ-U24JP102 ERZ-U11JP511B ERZ-U25JP102 ERZ-U21JP132H ERZ-U12JP541B

Общество с ограниченной ответственностью «МосЧип» ИНН 7719860671 / КПП 771901001
Адрес: 105318, г.Москва, ул.Щербаковская д.3, офис 1107

Данный компонент на территории Российской Федерации

Вы можете приобрести в компании MosChip.

Для оперативного оформления запроса Вам необходимо перейти по данной ссылке:

http://moschip.ru/get-element

Вы можете разместить у нас заказ для любого Вашего проекта, будь то серийное производство или разработка единичного прибора.

В нашем ассортименте представлены ведущие мировые производители активных и пассивных электронных компонентов.

Нашей специализацией является поставка электронной компонентной базы двойного назначения, продукции таких производителей как XILINX, Intel (ex.ALTERA), Vicor, Microchip, Texas Instruments, Analog Devices, Mini-Circuits, Amphenol, Glenair.

Сотрудничество с глобальными дистрибьюторами электронных компонентов, предоставляет возможность заказывать и получать с международных складов практически любой перечень компонентов в оптимальные для Вас сроки.

На всех этапах разработки и производства наши партнеры могут получить квалифицированную поддержку опытных инженеров.

Система менеджмента качества компании отвечает требованиям в соответствии с ГОСТ Р ИСО 9001, ГОСТ РВ 0015-002 и ЭС РД 009

Офис по работе с юридическими лицами:

105318, г.Москва, ул.Щербаковская д.3, офис 1107, 1118, ДЦ «Щербаковский»

Телефон: +7 495 668-12-70 (многоканальный)

Факс: +7 495 668-12-70 (доб.304)

E-mail: info@moschip.ru

Skype отдела продаж:
moschip.ru
moschip.ru_4
moschip.ru_6
moschip.ru_9