CAT5110, CAT5118, CAT5119, CAT5123, CAT5124, CAT5125

32-Tap Digitally Programmable Potentiometers with 2-Wire Interface

ON Semiconductor®

http://onsemi.com

SC−70
SD SUFFIX
CASE 419AD

SOT−23
TB SUFFIX
CASE 527AJ

SC−70
SD SUFFIX
CASE 419AC

SOT−23
TB SUFFIX
CASE 527AH

Description

CAT5110/18/19/23/24/25 linear−taper digitally programmable potentiometers perform the same function as a mechanical potentiometer or a variable resistor. These devices consist of a fixed resistor and a wiper contact with 32−tap points that are digitally controlled through a 2−wire up/down serial interface.

The CAT5110 and CAT5125 are configured as potentiometers. The CAT5118/19/23/24 are configured as variable resistors.

Three resistance values are available: 10 kΩ, 50 kΩ and 100 kΩ. All devices are available in space−saving 5−pin and 6−pin SOT−23 packages. The CAT5110/18/19 are also available in the SC−70 package.

Features

- 0.3 μA Ultra−low Standby Current
- Single−supply Operation: 2.7 V to 5.5 V
- Glitchless Switching between Resistor Taps
- Power−on Reset to Midscale
- 2−wire Up/Down Serial Interface
- Resistance Values: 10 kΩ, 50 kΩ and 100 kΩ
- Low Wiper Resistance: 80 Ω for CAT5123, CAT5124, CAT5125
- CAT5110, CAT5118, CAT5119 Available in SC−70
- These Devices are Pb−Free, Halogen Free/BFR Free and are RoHS Compliant

Applications

- LCD Screen Adjustment
- Volume Control
- Mechanical Potentiometer Replacement
- Gain Adjustment
- Line Impedance Matching

PIN CONNECTIONS

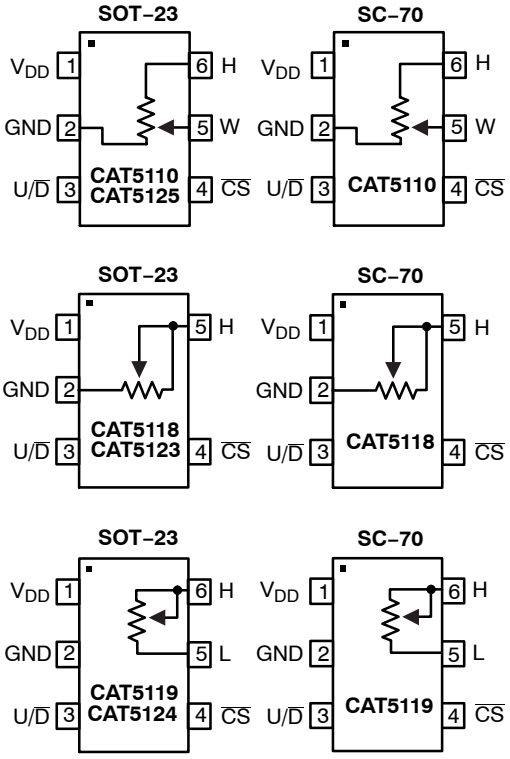

(Top Views)

ORDERING INFORMATION

See detailed ordering and shipping information in the package dimensions section on page 7 of this data sheet.

© Semiconductor Components Industries, LLC, 2012

January, 2012 − Rev. 12

Publication Order Number:
CAT5110/D

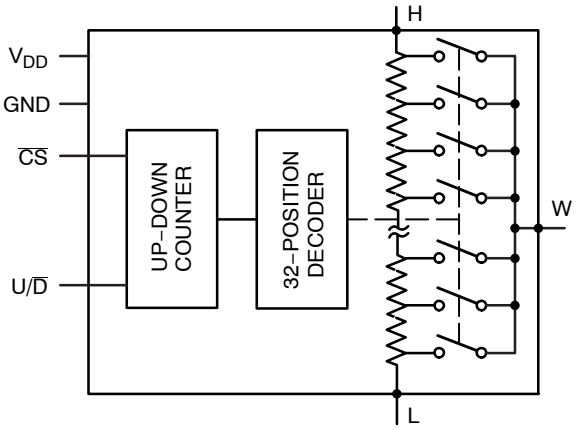

Figure 1. Functional Diagram

Table 1. PIN DESCRIPTIONS

Pin Number			Pin Name	Description
CAT5110/ CAT5125	CAT5118/ CAT5123	CAT5119/ CAT5124		
1	1	1	V_{DD}	Power Supply
2	2	2	GND	Ground
3	3	3	U/$\overline{D}$	Up/$\overline{Down}$ Control Input. With $\overline{CS}$ low, a low−to−high transition increments or decrements the wiper position.
4	4	4	$\overline{CS}$	Chip Select Input. A high−to−low $\overline{CS}$ transition determines the mode: increment if U/$\overline{D}$ is high, or decrement if U/$\overline{D}$ is low.
–	–	5	L	Low Terminal of Resistor
5	–	–	W	Wiper Terminal of Resistor
6	6	6	H	High Terminal of Resistor

Table 2. ABSOLUTE MAXIMUM RATINGS

Parameters	Ratings	Units
V_{DD} to GND	−0.3 to +6	V
All Other Pins to GND	−0.3 to (V_{DD} + 0.3)	V
Input and Output Latch−Up Immunity	±200	mA
Maximum Continuous Current into H, L and W		mA
100 kΩ	±0.6	
50 kΩ	±1.3	
10 kΩ	±1.3	
Continuous Power Dissipation (T_A = +70°C)		mW
5−pin SC−70 (Note 1)	247	
6−pin SC−70 (Note 1)	245	
Operating Temperature Range	−40 to +85	°C
Junction Temperature	+150	°C
Storage Temperature Range	−65 to +150	°C
Soldering Temperature (soldering, 10 sec)	+300	°C

Stresses exceeding Maximum Ratings may damage the device. Maximum Ratings are stress ratings only. Functional operation above the Recommended Operating Conditions is not implied. Extended exposure to stresses above the Recommended Operating Conditions may affect device reliability.

1. Derate 3.1 mW/°C above T_A = +70°C

Table 3. ELECTRICAL CHARACTERISTICS
(V_{DD} = 2.7 V to 5.5 V, V_H = V_{DD}, V_L = 0, T_A = −40°C to +85°C. Typical values are at V_{DD} = 2.7 V, T_A = 25°C, unless otherwise noted.)

Parameter	Symbol	Conditions	Min	Typ	Max	Units
DC PERFORMANCE						
Resolution			32			Taps
End−to−End Resistance (−00)			80	100	120	kΩ
End−to−End Resistance (−50)			40	50	60	
End−to−End Resistance (−10)			8	10	12	
End−to−End Resistance Tempco	TC_R	CAT5110/18/19		200		ppm/°C
		CAT5123/24/25		30	300	
Ratiometric Resistance Tempco				5		ppm/°C
Integral Nonlinearity	INL			±0.5	±1	LSB
Differential Nonlinearity	DNL				±1	LSB
Full−Scale Error				±0.1		LSB
Zero−Scale Error					1	LSB
Wiper Resistance	R_W	CAT5110/18/19		200	600	Ω
		CAT5123/24/25		80	200	
DIGITAL INPUTS						
Input High Voltage	V_{IH}		0.7 x V_{DD}			V
Input Low Voltage	V_{IL}				0.3 x V_{DD}	V
TIMING CHARACTERISTICS (Figures 7, 8)						
U/$\overline{D}$ Mode to $\overline{CS}$ Setup	t_{CU}		25			ns
$\overline{CS}$ to U/$\overline{D}$ Step Setup	t_{CI}		50			ns
$\overline{CS}$ to U/$\overline{D}$ Step Hold	t_{IC}		25			ns
U/$\overline{D}$ Step Low Period	t_{IL}		25			ns
U/$\overline{D}$ Step High Period	t_{IH}		25			ns
Up/$\overline{Down}$ Toggle Rate (Note 2)	f_{TOGGLE}			1		MHz
Output Settling Time (Note 3)	t_{SETTLE}	100 kΩ variable resistor configuration, C_L = 10 pF		1		μs
		100 kΩ potentiometer configuration, C_L = 10 pF		0.25		
POWER SUPPLY						
Supply Voltage	V_{DD}		2.7		5.5	V
Active Supply Current (Note 4)	I_{DD}				25	μA
Standby Supply Current (Note 5)	I_{SB}	V_{DD} = +5 V		0.3	1	μA

2. Up/Down Toggle Rate: $f_{TOGGLE} = 1 / t_{SETTLE}$
3. Typical settling times are dependent on end−to−end resistance.
4. Supply current measureed while changing wiper tap, f_{TOGGLE} = 1 MHz.
5. Supply current measureed while wiper position is fixed.

TYPICAL OPERATING CHARACTERISTICS

(T_A = 25°C, unless otherwise noted.)

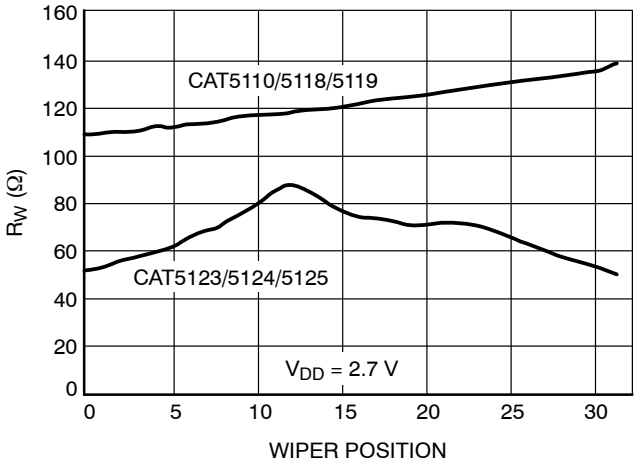

Figure 2. Wiper Resistance vs. Wiper Position

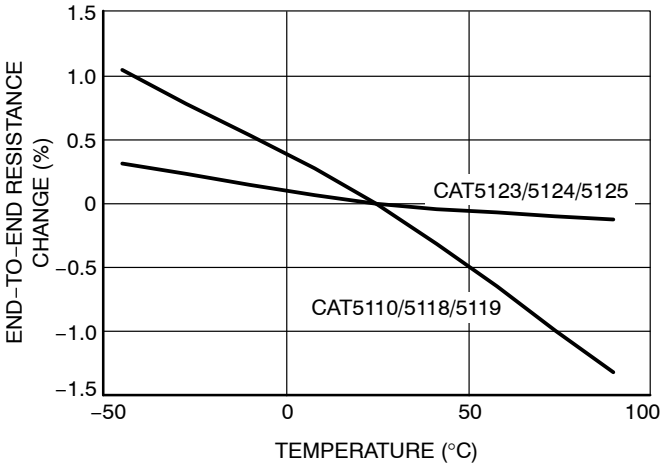

Figure 3. Change in End−to−End Resistance vs. Temperature

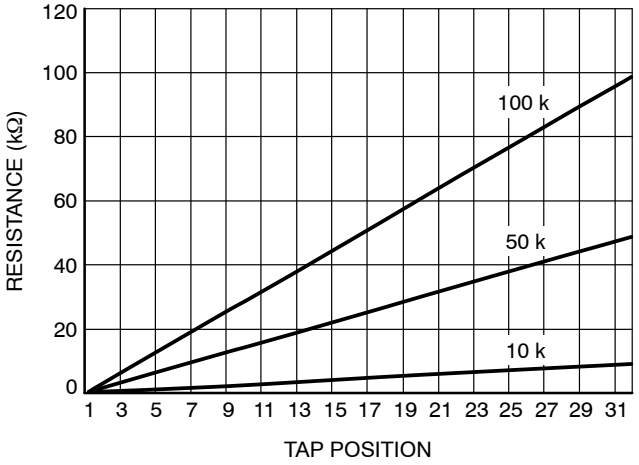

Figure 4. W−to−L Resistance vs. Tap Position

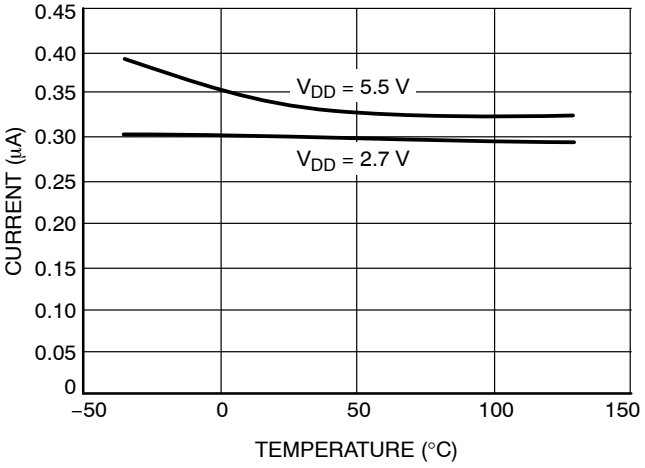

Figure 5. Supply Current vs. Temperature

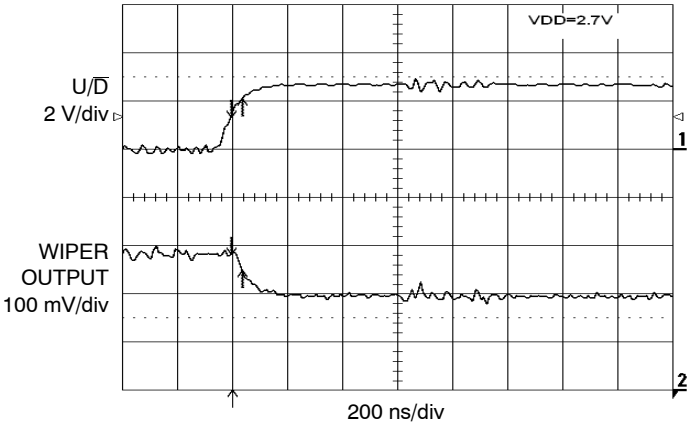

Figure 6. Tap−to−Tap Switching Transient

Functional Description

The CAT5110/5118/5119/5123/5124/5125 consist of a fixed resistor and a wiper contact with 32−tap points that are digitally controlled through a 2−wire up/down serial interface. Three end−to−end resistance values are available: 10 kΩ, 50 kΩ and 100 kΩ.

The CAT5110/5125 is designed to operate as a potentiometer. In this configuration, the low terminal of the resistor array is connected to ground (pin 2).

The CAT5118/5123 performs as a variable resistor. In this device, the wiper terminal and high terminal of the resistor array are connected at pin 5. The CAT5119/5124 is a similar variable resistor, except the low terminal is connected to pin 5.

Digital Interface Operation

The devices have two modes of operation when the serial interface is active: increment and decrement mode. The serial interface is only active when $\overline{CS}$ is low.

The $\overline{CS}$ and U/$\overline{D}$ inputs control the position of the wiper along the resistor array. When $\overline{CS}$ transitions from high to low, the part will go into increment mode if U/$\overline{D}$ input is high, and into decrement mode when U/$\overline{D}$ input is low. Once the mode is set, the device will remain in that mode until $\overline{CS}$ goes high again. A low−to−high transition at the U/$\overline{D}$ pin will increment or decrement the wiper position depending on the current mode (Figures 7 and 8).

When the $\overline{CS}$ input transitions to high (serial interface inactive), the value of the counter is stored and the wiper position is maintained.

Note that when the wiper reaches the maximum (or minimum) tap position, the wiper will not wrap around to the minimum (or maximum) position.

Power−On Reset

All parts in this family feature power−on reset (POR) circuitry that sets the wiper position to midscale at power−up. By default, the chip is in the increment mode.

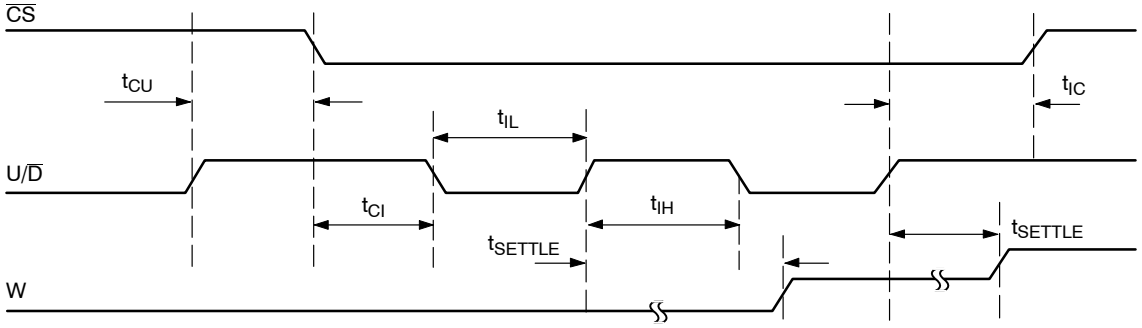

Note: “W” is not a digital signal. It represents wiper transitions.

Figure 7. Serial Interface Timing Diagram, Increment Mode

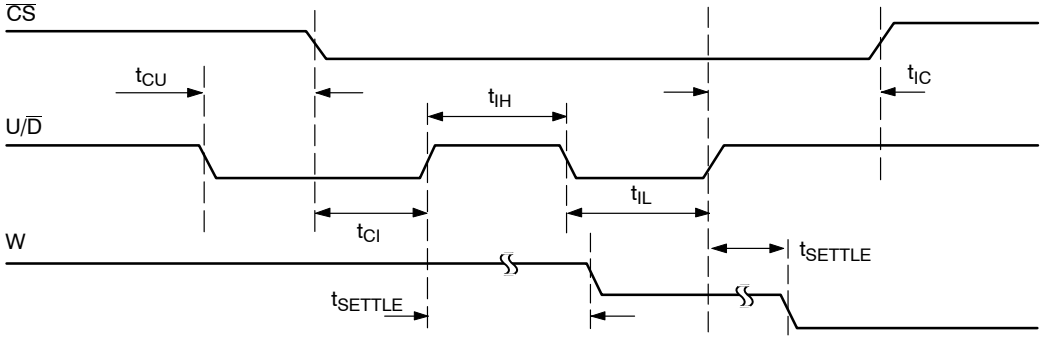

Note: “W” is not a digital signal. It represents wiper transitions.

Figure 8. Serial Interface Timing Diagram, Decrement Mode

Applications Information

The devices are intended for circuits requiring digitally controlled adjustable resistance, such as LCD contrast control, where voltage biasing adjusts the display contrast.

Alternative Positive LCD Bias Control

An op amp can be used to provide buffering and gain on the output of the CAT5110/CAT5125. This can be done by connecting the wiper output to the positive input of a noninverting op amp as shown in Figure 9. Figure 10 shows a similar circuit for the CAT5119/CAT5124.

Adjustable Gain

Figures 11 and 12 show how to use either a variable resistor or a potentiometer to digitally adjust the gain of a noninverting op amp configuration, by connecting the devices in series with a resistor to ground. The devices have a low 5 ppm/°C ratiometric tempco that allows for a very stable adjustable gain configuration over temperature.

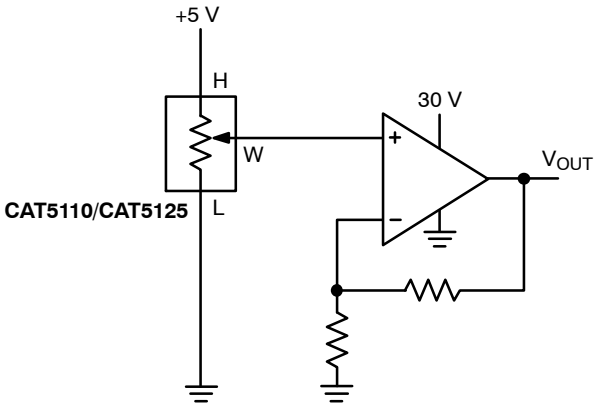

Figure 9. Positive LCD Bias Control

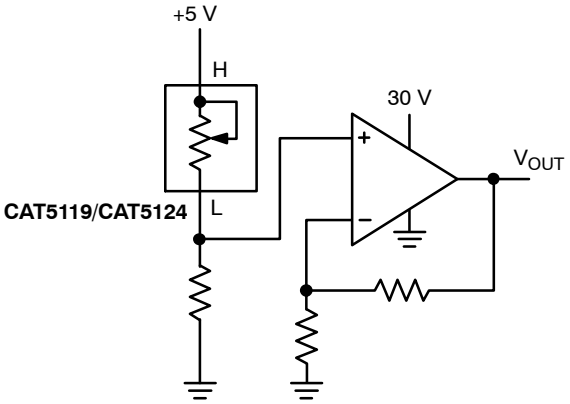

Figure 10. Positive LCD Bias Control

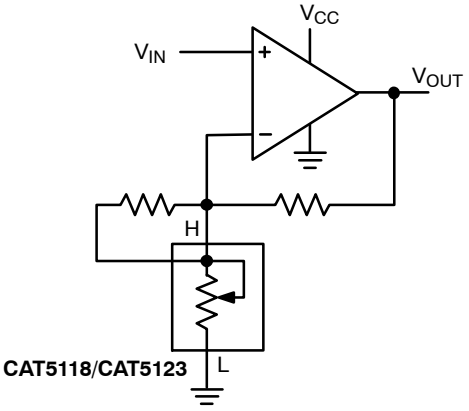

Figure 11. Adjustable Gain Circuit

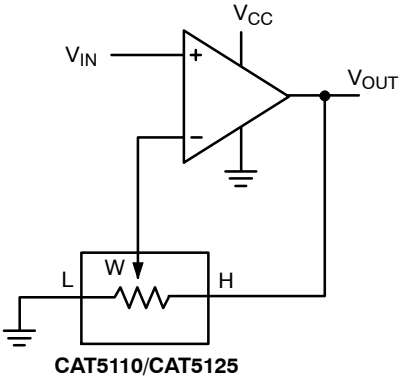

Figure 12. Adjustable Gain Circuit

Table 4. ORDERING INFORMATION

Device	Orderable Part Number	Resistor [kΩ]	Pin Package	Shipping†
CAT5110	CAT5110SDI−10GT3	10	SC70−6	3000 / Tape & Reel
	CAT5110TBI−10−T3	10	SOT23−6	3000 / Tape & Reel
	CAT5110TBI−10GT3	10	SOT23−6	3000 / Tape & Reel
	CAT5110SDI−50GT3	50	SC70−6	3000 / Tape & Reel
	CAT5110TBI−50−T3	50	SOT23−6	3000 / Tape & Reel
	CAT5110TBI−50GT3	50	SOT23−6	3000 / Tape & Reel
	CAT5110SDI−00GT3	100	SC70−6	3000 / Tape & Reel
	CAT5110TBI−00−T3	100	SOT23−6	3000 / Tape & Reel
	CAT5110TBI−00GT3	100	SOT23−6	3000 / Tape & Reel
CAT5118	CAT5118SDI−10GT3	10	SC70−5	3000 / Tape & Reel
	CAT5118TBI−10−T3	10	SOT23−5	3000 / Tape & Reel
	CAT5118TBI−10GT3	10	SOT23−5	3000 / Tape & Reel
	CAT5118SDI−50GT3	50	SC70−5	3000 / Tape & Reel
	CAT5118TBI−50−T3	50	SOT23−5	3000 / Tape & Reel
	CAT5118TBI−50GT3	50	SOT23−5	3000 / Tape & Reel
	CAT5118SDI−00GT3	100	SC70−5	3000 / Tape & Reel
	CAT5118TBI−00−T3	100	SOT23−5	3000 / Tape & Reel
	CAT5118TBI−00GT3	100	SOT23−5	3000 / Tape & Reel
CAT5119	CAT5119SDI−10GT3	10	SC70−6	3000 / Tape & Reel
	CAT5119TBI−10−T3	10	SOT23−6	3000 / Tape & Reel
	CAT5119TBI−10GT3	10	SOT23−6	3000 / Tape & Reel
	CAT5119SDI−50GT3	50	SC70−6	3000 / Tape & Reel
	CAT5119TBI−50−T3	50	SOT23−6	3000 / Tape & Reel
	CAT5119TBI−50GT3	50	SOT23−6	3000 / Tape & Reel
	CAT5119SDI−00GT3	100	SC70−6	3000 / Tape & Reel
	CAT5119TBI−00−T3	100	SOT23−6	3000 / Tape & Reel
	CAT5119TBI−00GT3	100	SOT23−6	3000 / Tape & Reel
CAT5123	CAT5123TBI−10−T3	10	SOT23−5	3000 / Tape & Reel
	CAT5123TBI−10GT3	10	SOT23−5	3000 / Tape & Reel
	CAT5123TBI−50−T3 (Note 7)	50	SOT23−5	3000 / Tape & Reel
	CAT5123TBI−50GT3 (Note 7)	50	SOT23−5	3000 / Tape & Reel
	CAT5123TBI−00−T3 (Note 7)	100	SOT23−5	3000 / Tape & Reel
	CAT5123TBI−00GT3 (Note 7)	100	SOT23−5	3000 / Tape & Reel
CAT5124	CAT5124TBI−10−T3 (Note 7)	10	SOT23−6	3000 / Tape & Reel
	CAT5124TBI−10GT3 (Note 7)	10	SOT23−6	3000 / Tape & Reel
	CAT5124TBI−50−T3	50	SOT23−6	3000 / Tape & Reel
	CAT5124TBI−50GT3	50	SOT23−6	3000 / Tape & Reel
	CAT5124TBI−00−T3 (Note 7)	100	SOT23−6	3000 / Tape & Reel
	CAT5124TBI−00GT3 (Note 7)	100	SOT23−6	3000 / Tape & Reel
CAT5125	CAT5125TBI−10−T3	10	SOT23−6	3000 / Tape & Reel
	CAT5125TBI−10GT3	10	SOT23−6	3000 / Tape & Reel
	CAT5125TBI−50−T3 (Notes 7)	50	SOT23−6	3000 / Tape & Reel
	CAT5125TBI−50GT3 (Note 7)	50	SOT23−6	3000 / Tape & Reel
	CAT5125TBI−00−T3 (Notes 7)	100	SOT23−6	3000 / Tape & Reel
	CAT5125TBI−00GT3 (Note 7)	100	SOT23−6	3000 / Tape & Reel

†For information on tape and reel specifications, including part orientation and tape sizes, please refer to our Tape and Reel Packaging Specifications Brochure, BRD8011/D.

6. For detailed information and a breakdown of device nomenclature and numbering systems, please see the ON Semiconductor Device Nomenclature document, TND310/D, available at www.onsemi.com.
7. Contact factory for availability.
8. All packages are RoHS−compliant (Pb−Free, Halogen−Free).
9. The standard finish is NiPdAu.
10. For additional package and temperature options, please contact your nearest ON Semiconductor Sales office.

PACKAGE DIMENSIONS

SC−70, 6 Lead, 1.25x2
CASE 419AD−01
ISSUE O

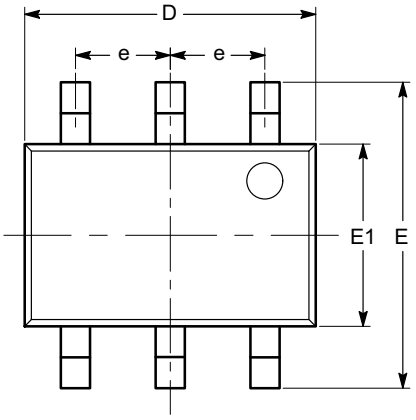

TOP VIEW

SYMBOL	MIN	NOM	MAX
A	0.80		1.10
A1	0.00		0.10
A2	0.80		1.00
b	0.15		0.30
c	0.10		0.18
D	1.80	2.00	2.20
E	1.80	2.10	2.40
E1	1.15	1.25	1.35
e		0.65 BSC	
L	0.26	0.36	0.46
L1		0.42 REF	
L2		0.15 BSC	
θ	0°		8°
θ1	4°		10°

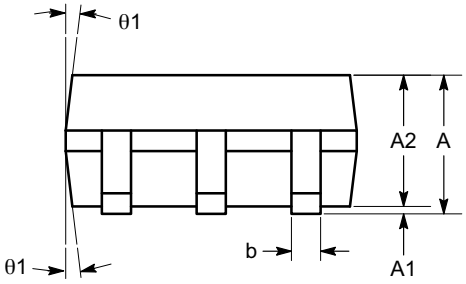

SIDE VIEW

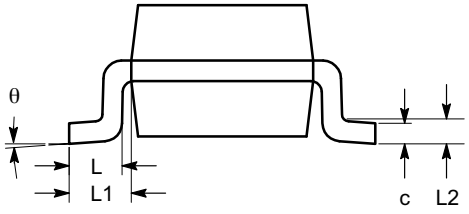

END VIEW

Notes:
(1) All dimensions are in millimeters. Angles in degrees.
(2) Complies with JEDEC MO-203.

PACKAGE DIMENSIONS

SOT−23, 6 Lead
CASE 527AJ−01
ISSUE O

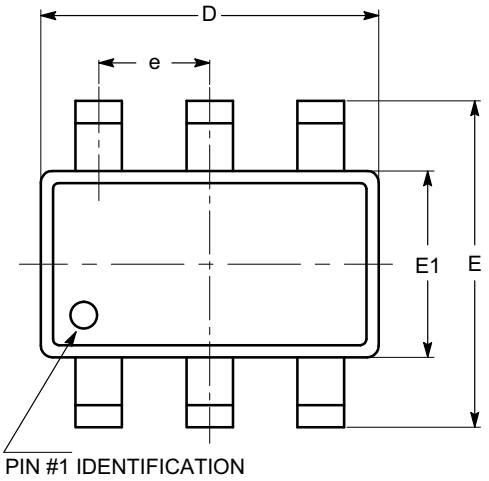

TOP VIEW

SYMBOL	MIN	NOM	MAX
A	0.90		1.45
A1	0.00		0.15
A2	0.90	1.15	1.30
b	0.30		0.50
c	0.08		0.22
D	2.90 BSC		
E	2.80 BSC		
E1	1.60 BSC		
e	0.95 BSC		
L	0.30	0.45	0.60
L1	0.60 REF		
L2	0.25 REF		
θ	0°	4°	8°
θ1	5°	10°	15°
θ2	5°	10°	15°

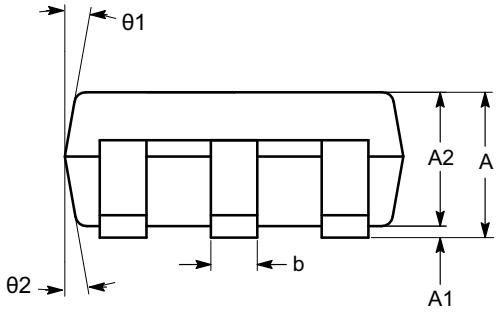

SIDE VIEW

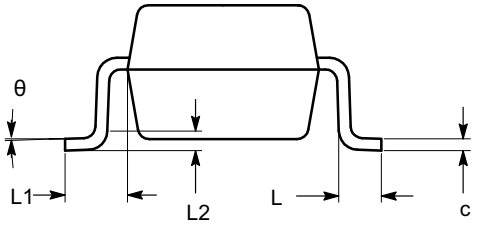

END VIEW

Notes:
(1) All dimensions in millimeters. Angles in degrees.
(2) Complies with JEDEC standard MO-178.

PACKAGE DIMENSIONS

SC−70, 5 Lead, 1.25x2
CASE 419AC−01
ISSUE O

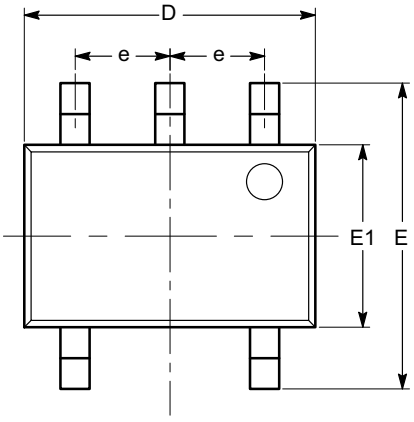

TOP VIEW

SYMBOL	MIN	NOM	MAX
A	0.80		1.10
A1	0.00		0.10
A2	0.80		1.00
b	0.15		0.30
c	0.10		0.18
D	1.80	2.00	2.20
E	1.80	2.10	2.40
E1	1.15	1.25	1.35
e		0.65 BSC	
L	0.26	0.36	0.46
L1		0.42 REF	
L2		0.15 BSC	
θ	0º		8º
θ1	4º		10º

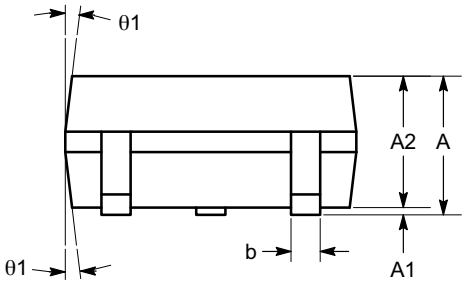

SIDE VIEW

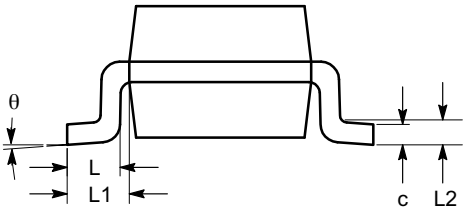

END VIEW

Notes:
(1) All dimensions are in millimeters. Angles in degrees.
(2) Complies with JEDEC MO-203.

PACKAGE DIMENSIONS

SOT−23, 5 Lead
CASE 527AH−01
ISSUE O

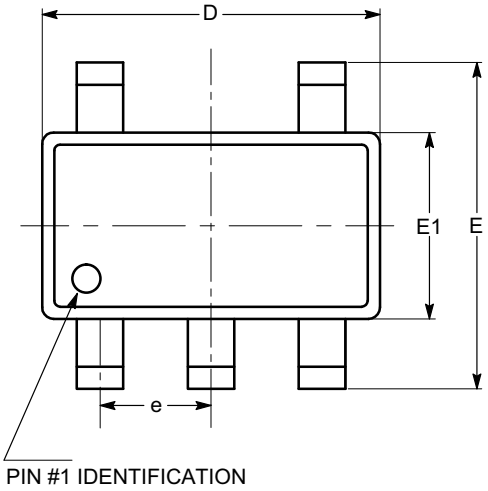

TOP VIEW

SYMBOL	MIN	NOM	MAX
A	0.90		1.45
A1	0.00		0.15
A2	0.90	1.15	1.30
b	0.30		0.50
c	0.08		0.22
D		2.90 BSC	
E		2.80 BSC	
E1		1.60 BSC	
e		0.95 BSC	
L	0.30	0.45	0.60
L1		0.60 REF	
L2		0.25 REF	
θ	0°	4°	8°
θ1	5°	10°	15°
θ2	5°	10°	15°

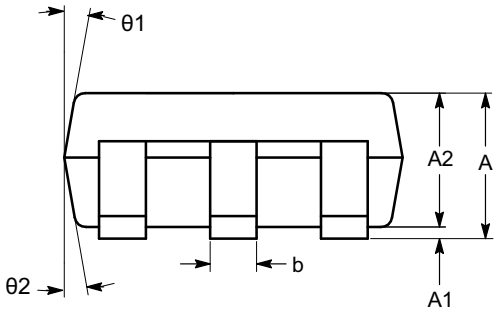

SIDE VIEW

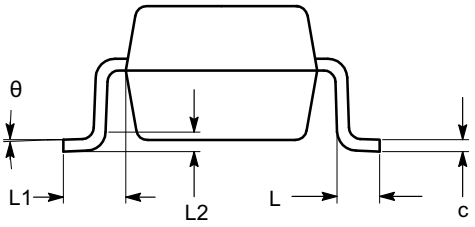

END VIEW

Notes:
(1) All dimensions in millimeters. Angles in degrees.
(2) Complies with JEDEC standard MO-178.

ON Semiconductor and ON are registered trademarks of Semiconductor Components Industries, LLC (SCILLC). SCILLC reserves the right to make changes without further notice to any products herein. SCILLC makes no warranty, representation or guarantee regarding the suitability of its products for any particular purpose, nor does SCILLC assume any liability arising out of the application or use of any product or circuit, and specifically disclaims any and all liability, including without limitation special, consequential or incidental damages. “Typical” parameters which may be provided in SCILLC data sheets and/or specifications can and do vary in different applications and actual performance may vary over time. All operating parameters, including “Typicals” must be validated for each customer application by customer’s technical experts. SCILLC does not convey any license under its patent rights nor the rights of others. SCILLC products are not designed, intended, or authorized for use as components in systems intended for surgical implant into the body, or other applications intended to support or sustain life, or for any other application in which the failure of the SCILLC product could create a situation where personal injury or death may occur. Should Buyer purchase or use SCILLC products for any such unintended or unauthorized application, Buyer shall indemnify and hold SCILLC and its officers, employees, subsidiaries, affiliates, and distributors harmless against all claims, costs, damages, and expenses, and reasonable attorney fees arising out of, directly or indirectly, any claim of personal injury or death associated with such unintended or unauthorized use, even if such claim alleges that SCILLC was negligent regarding the design or manufacture of the part. SCILLC is an Equal Opportunity/Affirmative Action Employer. This literature is subject to all applicable copyright laws and is not for resale in any manner.

PUBLICATION ORDERING INFORMATION

LITERATURE FULFILLMENT:
Literature Distribution Center for ON Semiconductor
P.O. Box 5163, Denver, Colorado 80217 USA
Phone: 303−675−2175 or 800−344−3860 Toll Free USA/Canada
Fax: 303−675−2176 or 800−344−3867 Toll Free USA/Canada
Email: orderlit@onsemi.com

N. American Technical Support: 800−282−9855 Toll Free USA/Canada
Europe, Middle East and Africa Technical Support:
Phone: 421 33 790 2910
Japan Customer Focus Center
Phone: 81−3−5817−1050

ON Semiconductor Website: **www.onsemi.com**

Order Literature: http://www.onsemi.com/orderlit

For additional information, please contact your local Sales Representative

Общество с ограниченной ответственностью «МосЧип» ИНН 7719860671 / КПП 771901001
Адрес: 105318, г.Москва, ул.Щербаковская д.3, офис 1107

Данный компонент на территории Российской Федерации

Вы можете приобрести в компании MosChip.

Для оперативного оформления запроса Вам необходимо перейти по данной ссылке:

http://moschip.ru/get-element

Вы можете разместить у нас заказ для любого Вашего проекта, будь то серийное производство или разработка единичного прибора.

В нашем ассортименте представлены ведущие мировые производители активных и пассивных электронных компонентов.

Нашей специализацией является поставка электронной компонентной базы двойного назначения, продукции таких производителей как XILINX, Intel (ex.ALTERA), Vicor, Microchip, Texas Instruments, Analog Devices, Mini-Circuits, Amphenol, Glenair.

Сотрудничество с глобальными дистрибьюторами электронных компонентов, предоставляет возможность заказывать и получать с международных складов практически любой перечень компонентов в оптимальные для Вас сроки.

На всех этапах разработки и производства наши партнеры могут получить квалифицированную поддержку опытных инженеров.

Система менеджмента качества компании отвечает требованиям в соответствии с ГОСТ Р ИСО 9001, ГОСТ РВ 0015-002 и ЭС РД 009

Офис по работе с юридическими лицами:

105318, г.Москва, ул.Щербаковская д.3, офис 1107, 1118, ДЦ «Щербаковский»

Телефон: +7 495 668-12-70 (многоканальный)

Факс: +7 495 668-12-70 (доб.304)

E-mail: info@moschip.ru

Skype отдела продаж:
moschip.ru
moschip.ru_4
moschip.ru_6
moschip.ru_9