Honeywell
THE POWER OF **CONNECTED**

TruStability™ Board Mount Pressure Sensors

32321348
Issue D

RSC Series—High Resolution, High Accuracy, Compensated
±1.6 mbar to ±10 bar | ±160 Pa to ±1 MPa | ±0.5 inH_2O to ±150 psi
24-bit Digital SPI-Compatible Output

Datasheet

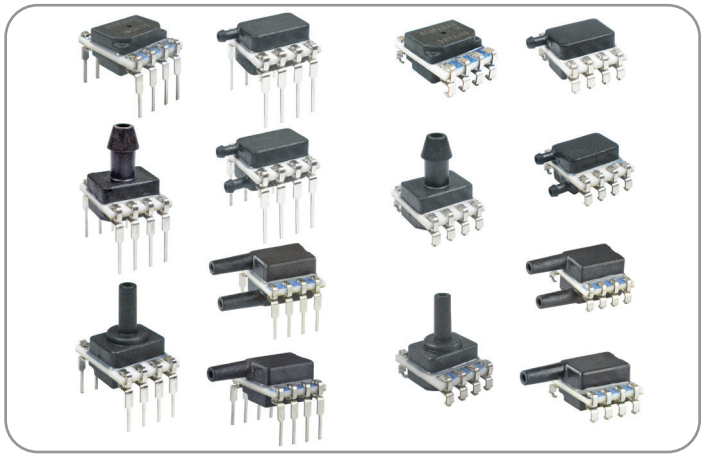

DESCRIPTION

The RSC Series is a piezoresistive silicon pressure sensor offering a digital output for reading pressure over the specified full scale pressure span and temperature range. It is calibrated and temperature compensated for sensor offset, sensitivity, temperature effects, and non-linearity using a 24-bit analog-to-digital converter with integrated EEPROM. Pressure data may be acquired at rates between 20 and 2000 samples per second over an SPI interface. It is intended for use with non-corrosive, non-ionic gases, such as air and other dry gases, designed and manufactured according to ISO 9001 standards, and is REACH and RoHS compliant.

VALUE TO CUSTOMERS

- Enhances performance: Output accelerates performance through reduced conversion requirements and direct interface to microprocessors. Proprietary Honeywell technology combines high sensitivity with high burst and over pressure while providing industry leading stability (performance factors difficult to achieve in the same sensor), providing flexibility in implementation and minimizing requirements for protecting the sensor without sacrificing ability to sense very small changes in pressure.
- Cost-effective, high volume solution with a variety of options.
- Enhances reliability: High burst pressures promote system reliability, minimize downtime, and can simplify design. High working pressures allow ultra-low sensors to be used continuously above the calibrated pressure range.
- Easy to design in: Package is small when compared to many similar sensors, occupying less area on the PCB. Port and housing options simplify integration. Wide pressure range simplifies use.
- Meets IPC/JEDEC J-STD-020D.1 Moisture Sensitivity Level 1 requirements: Allows avoidance of thermal and mechanical damage during solder reflow attachment and/or repair that lesser rated sensors would incur, allows unlimited floor life when stored as specified (simplifying storage and reducing scrap), eliminates lengthy bakes prior to reflow, and allows for lean manufacturing due to stability and usability shortly after reflow.
- Energy efficient: Reduces system power requirements and enables extended battery life.

FEATURES

- Pressure range: ±1.6 mbar to ±10 bar | ±160 Pa to ±1 MPa | ±0.5 inH_2O to ±150 psi; absolute range 1 bar to 8 bar | 15 psi to 150 psi
- Pressure types: Absolute: internal vacuum reference and an output value proportional to absolute pressure; Gage: referenced to atmospheric pressure and provide an output proportional to pressure variations from atmosphere; Differential: allows measurement of pressure between the two pressure ports
- Total Error Band: As low as ±0.25 %FSS depending on pressure range (after auto zero)
- Accuracy: ±0.1 %FSS BFSL (Full Scale Span Best Fit Straight Line)
- Compensated temperature range: -40°C to 85°C [-40°F to 185°F]
- Power consumption: Less than 10 mW, typ.
- Size: Miniature 10 mm x 12,5 mm [0.39 in x 0.49 in] package
- Output: 24-bit digital SPI-compatible
- Meets IPC/JEDEC J-STD-020D.1 Moisture Sensitivity Level 1 requirements

DIFFERENTIATION

- Industry-leading long-term stability: Minimizes system calibration needs and significantly reduces downtime.
- Industry-leading accuracy: Reduces software to correct system inaccuracies, which minimizes design time, helps improve efficiency, and often simplifies development.
- Industry-leading flexibility: Modular design with many package styles and options simplify integration.
- Total Error Band: Provides true performance over the compensated temperature range, which eliminates the need to test and calibrate every sensor, thereby reducing manufacturing cost. Improves system accuracy and offers ease of sensor interchangeability due to minimal part-to-part variation (see Figure 1 on page 3).

POTENTIAL APPLICATIONS

- Medical: Airflow monitors, anesthesia machines, blood analysis machines, gas chromatography, gas flow instrumentation, hospital room air pressure, kidney dialysis machines, nebulizers, pneumatic controls, respiratory machines, sleep apnea equipment, spirometers, ventilators
- Industrial: Barometry, drones, flow calibrators, gas chromatography, gas flow instrumentation, HVAC clogged filter detection, HVAC systems, HVAC transmitters, indoor air quality, life sciences, pneumatic control, VAV (Variable Air Volume) control, weather balloons

PORTFOLIO

Honeywell offers a variety of board mount pressure sensors for potential use in medical and industrial applications. Our categories of pressure sensor measurement include absolute, differential, gage or vacuum gage, with unamplified or amplified sensors and covering a wide pressure range.

Table of Contents

General Specifications ... 3-5
Nomenclature and Order Guide ... 6
Pressure Range Specifications
±1.6 mbar to ±10 bar ... 7
±160 Pa to ±1 MPa ... 8
±0.5 inH_2O to ±150 psi ... 9
Dimensional Drawings
DIP Packages ... 10-12
SMT Packages ... 12-14
Recommended PCB Pad Layouts ... 14
Pinout ... 14
Recommended Circuit ... 15
1.0 System Overview ... 16
1.1 Major System Blocks ... 16
1.2 High-level Operating Sequence ... 16
1.3 Compensation Mathematics ... 17
2.0 System Initialization – EEPROM ... 18
2.1 EEPROM Contents ... 18-19
2.2 EEPROM Communication ... 20-21
3.0 System Operation – ADC ... 21
3.1 ADC Communications and Initialization ... 22
3.2 Programming the Data Rate and Pressure/Temperature Modes ... 22
3.3 ADC Reset Command ... 23
3.4 ADC Programming Sequence – Power Up ... 23
3.5 ADC Programming and Read Sequence – Temperature Reading ... 23-24
3.6 ADC Programming and Read Sequence – Pressure Reading ... 24
4.0 Example Software ... 25
4.1 Data Types ... 25
4.2 Function Descriptions – Pressure_Comp.c ... 25-26
4.3 Checksum Calculation ... 26
4.4 Compensation Sequence ... 27
4.5 Constraints ... 27
5.0 Sensor Offset Zero Correction Procedure ... 28
Additional Information ... back page

Figure 1. TEB Components for TruStability™ Board Mount Pressure Sensors

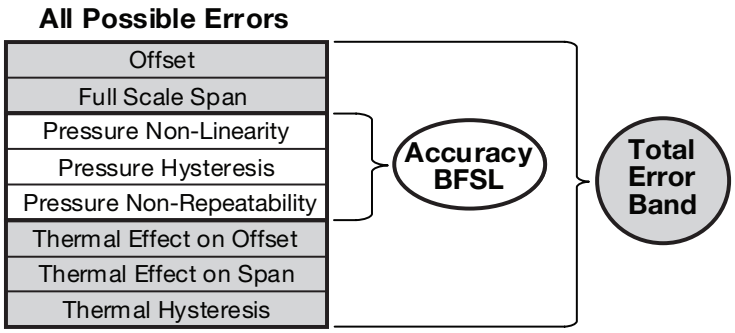

Table 1. Absolute Maximum Ratings[1]

Characteristic	Min.	Max.	Unit
Supply voltage (V_{supply})	2.7	6.0	Vdc
Voltage on any pin	-0.3	V_{supply} + 0.3	V
Digital interface clock frequency	—	5	MHz
ESD susceptibility (human body model)	—	2	kV
Storage temperature	-40 [-40]	85 [185]	°C [°F]
Soldering time and temperature: lead solder temperature (DIP) peak reflow temperature (SMT)	 4 s max. at 250°C [482°F] 15 s max. at 250°C [482°F]		

[1]Absolute maximum ratings are the extreme limits the device will withstand without damage.

Table 2. Environmental Specifications

Characteristic	Parameter
Humidity (gases only)	0% to 95% RH, non-condensing
Vibration	15 g, 10 Hz to 2 Hz
Shock	100 g, 6 ms duration
Life[1]	1 million pressure cycles minimum
Solder reflow	J-STD-020-D.1 Moisture Sensitivity Level 1 (unlimited shelf life when stored at ≤30°C/85 % RH)

[1]Life may vary depending on specific application in which the sensor is utilized.

Table 3. Wetted Materials[1]

Component	Port 1 (Pressure Port)	Port 2 (Reference Port)
Ports and covers	high temperature polyamide	high temperature polyamide
Substrate	alumina ceramic	alumina ceramic
Adhesives	epoxy, silicone	epoxy, silicone
Electronic components	plastic, silicon, glass, solder	silicon, glass, gold

[1]Contact Honeywell Customer Service for detailed material information.

Table 4. Sensor Pressure Types

Pressure Type	Description
Absolute	Output is proportional to the difference between applied pressure and a built-in vacuum reference.
Differential	Output is proportional to the difference between the pressures applied to each port (Port 1 – Port 2).
Gage	Output is proportional to the difference between applied pressure and atmospheric (ambient) pressure.

Table 5. Digital Operating Specifications

Characteristic	Min.	Typ.	Max.	Unit
Supply voltage (V_{supply}):[1, 2, 3] pressure ranges ≥60 mbar | 6 kPa | 1 psi: 3.3 Vdc 5.0 Vdc pressure ranges ≤40 mbar | 4 kPa | 20 inH_2O: 3.3 Vdc 5.0 Vdc	 3.0 4.75 3.27 4.95	 3.3 5.0 3.3 5.0	 3.6 5.25 3.33 5.05	Vdc
Supply current: 3.3 Vdc: standby mode active mode 5.0 Vdc: standby mode active mode	 — — — —	 1.3 1.7 2.1 2.6	 — — — —	mA
Operating temperature range[4]	-40 [-40]	—	85 [185]	°C [°F]
Compensated temperature range:[5] medical industrial extended	 0 [32] -20 [-4] -40 [-40]	 — — —	 50 [122] 85 [185] 85 [185]	°C [°F]
Startup time (power up to data ready)	—	—	0.3	ms
Data rate	20, 40, 45, 90, 175, 180, 330, 350, 600, 660, 1000, 1200, 2000			samples per second
SPI voltage level: low high	 — 80	 — —	 20 —	%Vsupply
Pull up on MISO, SCLK, CS_ADC, CS_EE, MOSI	1	—	—	kOhm
Accuracy[6]	—	—	0.1	%FSS BFSL[6]
Orientation sensitivity (±1 g):[7, 9] pressure ranges ≤40 mbar | 4 kPa | 20 inH_2O pressure ranges ≤2.5 mbar | 250 Pa | 1 inH_2O	 — —	 ±0.1 ±0.2	 — —	%FSS[8]

[1]Sensors are either 3.3 Vdc or 5.0 Vdc based on the catalog listing selected.

[2]Ratiometricity of the sensor (the ability of the device output to scale to the supply voltage) is achieved within the specified operating voltage.

[3]The sensor is not reverse polarity protected. Incorrect application of supply voltage or ground to the wrong pin may cause electrical failure.

[4]Operating temperature range: The temperature range over which the sensor will produce an output proportional to pressure.

[5]Compensated temperature range: The temperature range over which the sensor will produce an output proportional to pressure within the specified performance limits (Total Error Band).

[6]Accuracy: The maximum deviation in output from a Best Fit Straight Line (BFSL) fitted to the output measured over the pressure range. Includes all errors due to pressure non-linearity, pressure hysteresis, and non-repeatability.

[7]Orientation sensitivity: The maximum change in offset of the sensor due to a change in position or orientation relative to Earth's gravitational field.

[8]Full Scale Span (FSS): The algebraic difference between the output signal measured at the maximum (Pmax.) and minimum (Pmin.) limits of the pressure range. (See Figure 1 for ranges.)

[9]Insignificant for pressure ranges above 40 mbar | 4 kPa | 20 inH_2O.

Figure 2. SPI Timing Requirements[1]

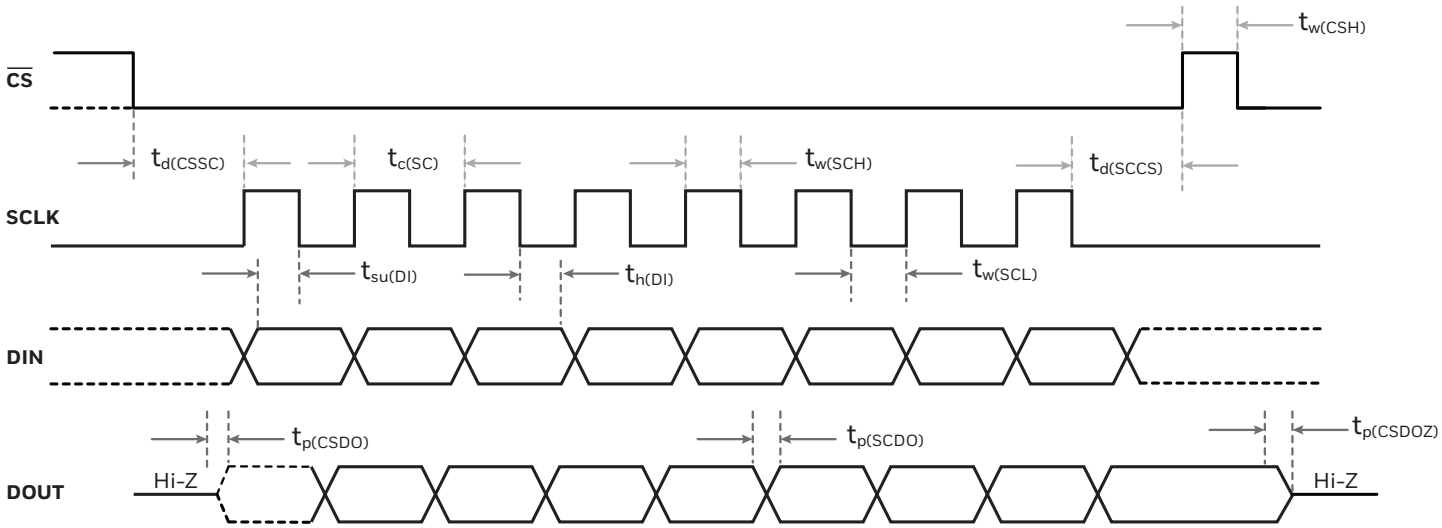

Characteristic	Description	Min.	Max.	Unit
$t_{d(CSSC)}$	delay time; $\overline{CS}$ falling edge to first SCLK rising edge	50	—	ns
$t_{d(SCCS)}$	delay time,;final SCLK falling edge to $\overline{CS}$ rising edge	30	—	ns
$t_{w(CSH)}$	pulse duration; $\overline{CS}$ high	80	—	ns
$t_{c(SC)}$	SCLK period	150	—	ns
$t_{w(SCH)}$	pulse duration; SCLK high	75	—	ns
$t_{w(SCL)}$	pulse duration; SCLK low	75	—	ns
$t_{su(DI)}$	setup time; DIN valid before SCLK falling edge	50	—	ns
$t_{h(DI)}$	hold time; DIN valid after SCLK falling edge	25	—	ns
$t_{p(CSDO)}$	propagation delay time; $\overline{CS}$ falling edge to DOUT driven	—	50	ns
$t_{p(SCDO)}$	propagation delay time; SCLK rising edge to valid new DOUT	0	50	ns
$t_{p(CSDOZ)}$	propagation delay time; $\overline{CS}$ rising edge to DOUT high impedance	—	50	ns

[1]Single byte communication is shown. Actual communication may be several bytes.

Figure 3. Nomenclature and Order Guide

For example, **RSCDNNM150PGSE3** defines an RSC Series TruStability™ Pressure Sensor, DIP package, NN pressure port, medical compensated temperature range,150 psi gage pressure range, SPI output type, external math transfer function, 3.3 Vdc supply voltage.

R S C D N N M 1 5 0 P G S E 3

Product Series

RSC	High Resolution, High Accuracy, Compensated/Amplified

Package

D	DIP (Dual Inline Pin)
M	SMT (Surface Mount Technology)

Pressure Port

DIP		SMT	
NN	No ports	**NN**	No ports
AN	Single axial barbed port	**AN**	Single axial barbed port
LN	Single axial barbless port	**LN**	Single axial barbless port
RN[2]	Single radial barbed port	**RN**[2]	Single radial barbed port
RR[2]	Dual radial barbed ports, same side	**RR**[2]	Dual radial barbed ports, same side
JN	Single radial barbless port	**JN**	Single radial barbless port
JJ	Dual radial barbless ports, same side	**JJ**	Dual radial barbless ports, same side

Compensated Temperature Range[1]

M	Medical (0°C to 50°C [32°F to 122°F])
I	Industrial (-20°C to 85°C [-4°F to 185°F])
E	Extended (-40°C to 85°C [-40°F to 185°F])

[1]Custom pressure and temperature ranges are available. Contact Honeywell Customer Service for more information.
[2]RR and RN pressure ports: The maximum applied pressure is 60 psi.

Supply Voltage

3	3.3 Vdc
5	5.0 Vdc

Transfer Function

E	External math

Output Type

S	SPI

Pressure Range[1]

±1.6 mbar to ±10 bar		±160 Pa to ±1 MPa		±0.5 inH_2O to ±150 psi	
Absolute		*Absolute*		*Absolute*	
001BA	0 bar to 1 bar	**100KA**	0 kPa to 100 kPa	**015PA**	0 psi to 15 psi
1.6BA	0 bar to 1.6 bar	**160KA**	0 kPa to 160 kPa	**030PA**	0 psi to 30 psi
2.5BA	0 bar to 2.5 bar	**250KA**	0 kPa to 250 kPa	**060PA**	0 psi to 60 psi
004BA	0 bar to 4 bar	**400KA**	0 kPa to 400 kPa	**100PA**	0 psi to 100 psi
006BA	0 bar to 6 bar	**600KA**	0 kPa to 600 kPa	**150PA**	0 psi to 150 psi
010BA	0 bar to 10 bar	**001GA**	0 kPa to 1 MPa		
Differential		*Differential*		*Differential*	
1.6MD	±1.6 mbar	**160LD**	±160 Pa	**0.5ND**	±0.5 inH_2O
2.5MD	±2.5 mbar	**250LD**	±250 Pa	**001ND**	±1 inH_2O
004MD	±4 mbar	**400LD**	±400 Pa	**002ND**	±2 inH_2O
006MD	±6 mbar	**600LD**	±600 Pa	**004ND**	±4 inH_2O
010MD	±10 mbar	**001KD**	±1 kPa	**005ND**	±5 inH_2O
016MD	±16 mbar	**1.6KD**	±1.6 kPa	**010ND**	±10 inH_2O
025MD	±25 mbar	**2.5KD**	±2.5 kPa	**020ND**	±20 inH_2O
040MD	±40 mbar	**004KD**	±4 kPa	**030ND**	±30 inH_2O
060MD	±60 mbar	**006KD**	±6 kPa	**001PD**	±1 psi
100MD	±100 mbar	**010KD**	±10 kPa	**005PD**	±5 psi
160MD	±160 mbar	**016KD**	±16 kPa	**015PD**	±15 psi
250MD	±250 mbar	**025KD**	±25 kPa	**030PD**	±30 psi
400MD	±400 mbar	**040KD**	±40 kPa	**060PD**	±60 psi
600MD	±600 mbar	**060KD**	±60 kPa	**100PD**	±100 psi
001BD	±1 bar	**100KD**	±100 kPa	**150PD**	±150 psi
1.6BD	±1.6 bar	**160KD**	±160 kPa		
2.5BD	±2.5 bar	**250KD**	±250 kPa		
004BD	±4 bar	**400KD**	±400 kPa		
006BD	±6 bar	**600KD**	±600 kPa		
010BD	±10 bar	**001GD**	±1 MPa		
Gage		*Gage*		*Gage*	
2.5MG	0 mbar to 2.5 mbar	**250LG**	0 Pa to 250 Pa	**001NG**	0 inH_2O to 1 inH_2O
004MG	0 mbar to 4 mbar	**400LG**	0 Pa to 400 Pa	**002NG**	0 inH_2O to 2 inH_2O
006MG	0 mbar to 6 mbar	**600LG**	0 Pa to 600 Pa	**004NG**	0 inH_2O to 4 inH_2O
010MG	0 mbar to 10 mbar	**001KG**	0 kPa to 1 kPa	**005NG**	0 inH_2O to 5 inH_2O
016MG	0 mbar to 16 mbar	**1.6KG**	0 kPa to 1.6 kPa	**010NG**	0 inH_2O to 10 inH_2O
025MG	0 mbar to 25 mbar	**2.5KG**	0 kPa to 2.5 kPa	**020NG**	0 inH_2O to 20 inH_2O
040MG	0 mbar to 40 mbar	**004KG**	0 kPa to 4 kPa	**030NG**	0 inH_2O to 30 inH_2O
060MG	0 mbar to 60 mbar	**006KG**	0 kPa to 6 kPa	**001PG**	0 psi to 1 psi
100MG	0 mbar to 100 mbar	**010KG**	0 kPa to 10 kPa	**005PG**	0 psi to 5 psi
160MG	0 mbar to 160 mbar	**016KG**	0 kPa to 16 kPa	**015PG**	0 psi to 15 psi
250MG	0 mbar to 250 mbar	**025KG**	0 kPa to 25 kPa	**030PG**	0 psi to 30 psi
400MG	0 bar to 400 mbar	**040KG**	0 kPa to 40 kPa	**060PG**	0 psi to 60 psi
600MG	0 bar to 600 mbar	**060KG**	0 kPa to 60 kPa	**100PG**	0 psi to 100 psi
001BG	0 bar to 1 bar	**100KG**	0 kPa to 100 kPa	**150PG**	0 psi to 150 psi
1.6BG	0 bar to 1.6 bar	**160KG**	0 kPa to 160 kPa		
2.5BG	0 bar to 2.5 bar	**250KG**	0 kPa to 250 kPa		
004BG	0 bar to 4 bar	**400KG**	0 kPa to 400 kPa		
006BG	0 bar to 6 bar	**600KG**	0 kPa to 600 kPa		
010BG	0 bar to 10 bar	**001GG**	0 kPa to 1 MPa		

Table 6. Pressure Range Specifications for ±1.6 mbar to ±10 bar

Pressure Range (see Figure 3)	Pressure Range		Unit	Working Pressure[1]	Over Pressure[2]	Burst Pressure[3]	Common Mode Pressure[4]	Total Error Band[5] (%FSS)	Total Error Band after Auto-Zero[6] (%FSS)	Long-term Stability 1000 hr, 25°C (%FSS)	Effective Number of Bits (ENOB) at 20 SPS[7]
	Pmin.	Pmax.									
Absolute											
001BA	0	1	bar	—	2	4	—	±0.75	±0.25	±0.25	16
1.6BA	0	1.6	bar	—	4	8	—	±0.75	±0.25	±0.25	16
2.5BA	0	2.5	bar	—	6	8	—	±0.75	±0.25	±0.25	16
004BA	0	4	bar	—	8	16	—	±0.75	±0.25	±0.25	16
006BA	0	6	bar	—	17	17	—	±0.75	±0.25	±0.25	15
010BA	0	10	bar	—	17	17	—	±0.75	±0.25	±0.25	16
Differential											
1.6MD	-1.6	1.6	mbar	335	675	1000	3450	±3	±0.5	±0.5	16
2.5MD	-2.5	2.5	mbar	335	675	1000	3450	±2	±0.5	±0.35	14
004MD	-4	4	mbar	335	675	1000	3450	±2	±0.5	±0.35	15
006MD	-6	6	mbar	335	675	1000	3450	±2	±0.5	±0.35	16
010MD	-10	10	mbar	375	750	1250	5450	±0.75	±0.25	±0.25	16
016MD	-16	16	mbar	375	750	1250	5450	±1	±0.25	±0.25	17
025MD	-25	25	mbar	435	850	1350	10450	±1	±0.25	±0.25	18
040MD	-40	40	mbar	435	850	1350	10450	±0.75	±0.25	±0.25	15
060MD	-60	60	mbar	—	850	1000	10000	±0.75	±0.25	±0.25	15
100MD	-100	100	mbar	—	1400	2500	10000	±0.75	±0.25	±0.25	15
160MD	-160	160	mbar	—	1400	2500	10000	±0.75	±0.25	±0.25	16
250MD	-250	250	mbar	—	1400	2500	10000	±0.75	±0.25	±0.25	16
400MD	-400	400	mbar	—	2000	4000	10000	±0.75	±0.25	±0.25	15
600MD	-600	600	mbar	—	2000	4000	10000	±0.75	±0.25	±0.25	16
001BD	-1	1	bar	—	4	8	10	±0.75	±0.25	±0.25	16
1.6BD	-1.6	1.6	bar	—	8	16	10	±0.75	±0.25	±0.25	16
2.5BD	-2.5	2.5	bar	—	8	16	10	±0.75	±0.25	±0.25	16
004BD	-4.0	4.0	bar	—	16	17	10	±0.75	±0.25	±0.25	16
006BD	-6	6	bar	—	17	17	17	±0.75	±0.25	±0.25	16
010BD	-10	10	bar	—	17	17	17	±0.75	±0.25	±0.25	17
Gage											
2.5MG	0	2.5	mbar	335	675	1000	3450	±3	±0.5	±0.5	15
004MG	0	4	mbar	335	675	1000	3450	±3	±0.5	±0.5	16
006MG	0	6	mbar	335	675	1000	3450	±2	±0.5	±0.35	15
010MG	0	10	mbar	335	675	1000	3450	±0.75	±0.25	±0.35	15
016MG	0	16	mbar	335	675	1000	3450	±0.75	±0.25	±0.25	16
025MG	0	25	mbar	375	750	1250	5450	±1	±0.25	±0.25	17
040MG	0	40	mbar	375	750	1250	5450	±0.75	±0.25	±0.25	15
060MG	0	60	mbar	—	850	1000	5450	±0.75	±0.25	±0.25	14
100MG	0	100	mbar	—	850	1000	10000	±0.75	±0.25	±0.25	15
160MG	0	160	mbar	—	850	1000	10000	±0.75	±0.25	±0.25	16
250MG	0	250	mbar	—	1400	2500	10000	±0.75	±0.25	±0.25	15
400MG	0	400	mbar	—	2000	4000	10000	±0.75	±0.25	±0.25	14
600MG	0	600	mbar	—	2000	4000	10000	±0.75	±0.25	±0.25	15
001BG	0	1	bar	—	2	4	10	±0.75	±0.25	±0.25	16
1.6BG	0	1.6	bar	—	4	8	10	±0.75	±0.25	±0.25	16
2.5BG	0	2.5	bar	—	8	16	10	±0.75	±0.25	±0.25	15
004BG	0	4	bar	—	8	16	16	±0.75	±0.25	±0.25	16
006BG	0	6	bar	—	17	17	17	±0.75	±0.25	±0.25	15
010BG	0	10	bar	—	17	17	17	±0.75	±0.25	±0.25	16

[1]Working Pressure: The maximum pressure that may be applied to any port of the sensor in continuous use. This pressure may be outside the operating pressure range limits (Pmin. to Pmax.) in which case the sensor may not provide a valid output until presssure is returned to within the operating pressure range. Tested to 1 million cycles, minimum.

[2]Overpressure: The maximum pressure which may safely be applied to the product for it to remain in specification once pressure is returned to the operating pressure range. Exposure to higher pressures may cause permanent damage to the product. Unless otherwise specified this applies to all available pressure ports at any temperature with the operating temperature range.

[3]Burst Pressure: The maximum pressure that may be applied to any port of the product without causing escape of pressure media. Product should not be expected to function after exposure to any pressure beyond the burst pressure.

[4]Common Mode Pressure: The maximum pressure that can be applied simultaneously to both ports of a differential pressure sensor without causing changes in specified performance.

[5]Total Error Band: The maximum deviation from the ideal transfer function over the entire compensated temperature and pressure range. Includes all errors due to offset, full scale span, pressure non-linearity, pressure hysteresis, repeatability, thermal effect on offset, thermal effect on span, and thermal hysteresis (see Figure 1).

[6]Total Error Band after Auto-Zero: The maximum deviation from the ideal transfer function over the entire compensated pressure range for a minimum of 24 hours after an auto-zero operation. Includes all errors due to full scale span, pressure non-linearity, pressure hysteresis, and thermal effect on span.

[7]Effective Number of Bits (ENOB): A measure of the dynamic performance of an analog-to-digital converter (ADC) and its related circuitry. ENOB is defined for the RSC Series per the following equation: ENOB = $\log_2$ (Full Scale Span/Noise).

Table 7. Pressure Range Specifications for ±160 Pa to ±1 MPa

Pressure Range (see Figure 3)	Pressure Range		Unit	Working Pressure[1]	Over Pressure[2]	Burst Pressure[3]	Common Mode Pressure[4]	Total Error Band[5] (%FSS)	Total Error Band after Auto-Zero[6] (%FSS)	Long-term Stability 1000 hr, 25°C (%FSS)	Effective Number of Bits (ENOB) at 20 SPS[7]
	Pmin.	Pmax.									
Absolute											
100KA	0	100	kPa	—	200	400	—	±0.75	±0.25	±0.25	16
160KA	0	160	kPa	—	400	800	—	±0.75	±0.25	±0.25	16
250KA	0	250	kPa	—	600	800	—	±0.75	±0.25	±0.25	16
400KA	0	400	kPa	—	800	1600	—	±0.75	±0.25	±0.25	16
600KA	0	600	kPa	—	1700	1700	—	±0.75	±0.25	±0.25	15
001GA	0	1	MPa	—	1700	1700	—	±0.75	±0.25	±0.25	16
Differential											
160LD	-160	160	Pa	33500	67500	100000	345000	±3	±0.5	±0.5	16
250LD	-250	250	Pa	33500	67500	100000	345000	±2	±0.5	±0.35	14
400LD	-400	400	Pa	33500	67500	100000	345000	±2	±0.5	±0.35	15
600LD	-600	600	Pa	33500	67500	100000	345000	±2	±0.5	±0.35	16
001KD	-1	1	kPa	37.5	75	125	545	±0.75	±0.25	±0.25	16
1.6KD	-1.6	1.6	kPa	37.5	75	125	545	±1	±0.25	±0.25	17
2.5KD	-2.5	2.5	kPa	43.5	85	135	1045	±1	±0.25	±0.25	18
004KD	-4	4	kPa	43.5	85	135	1045	±0.75	±0.25	±0.25	15
006KD	-6	6	kPa	—	85	100	1000	±0.75	±0.25	±0.25	15
010KD	-10	10	kPa	—	140	250	1000	±0.75	±0.25	±0.25	16
016KD	-16	16	kPa	—	140	250	1000	±0.75	±0.25	±0.25	17
025KD	-25	25	kPa	—	140	250	1000	±0.75	±0.25	±0.25	16
040KD	-40	40	kPa	—	200	400	1000	±0.75	±0.25	±0.25	17
060KD	-60	60	kPa	—	200	400	1000	±0.75	±0.25	±0.25	16
100KD	-100	100	kPa	—	400	800	1000	±0.75	±0.25	±0.25	16
160KD	-160	160	kPa	—	800	1600	1000	±0.75	±0.25	±0.25	16
250KD	-250	250	kPa	—	800	1600	1000	±0.75	±0.25	±0.25	16
400KD	-400	400	kPa	—	1600	1700	1000	±0.75	±0.25	±0.25	16
600KD	-600	600	kPa	—	1700	1700	1700	±0.75	±0.25	±0.25	16
001GD	-1	1	MPa	—	1.7	1.7	1.7	±0.75	±0.25	±0.25	17
Gage											
250LG	0	250	Pa	33500	67500	100000	345000	±3	±0.5	±0.5	15
400LG	0	400	Pa	33500	67500	100000	345000	±3	±0.5	±0.5	16
600LG	0	600	Pa	33500	67500	100000	345000	±2	±0.5	±0.35	15
001KG	0	1	kPa	33.5	67.5	100	345	±0.75	±0.25	±0.35	15
1.6KG	0	1.6	kPa	33.5	67.5	100	345	±0.75	±0.25	±0.25	16
2.5KG	0	2.5	kPa	37.5	75	125	545	±1	±0.25	±0.25	17
004KG	0	4	kPa	37.5	75	125	545	±0.75	±0.25	±0.25	15
006KG	0	6	kPa	—	85	100	545	±0.75	±0.25	±0.25	14
010KG	0	10	kPa	—	85	100	1000	±0.75	±0.25	±0.25	15
016KG	0	16	kPa	—	85	100	1000	±0.75	±0.25	±0.25	16
025KG	0	25	kPa	—	140	250	1000	±0.75	±0.25	±0.25	15
040KG	0	40	kPa	—	200	400	1000	±0.75	±0.25	±0.25	14
060KG	0	60	kPa	—	200	400	1000	±0.75	±0.25	±0.25	15
100KG	0	100	kPa	—	200	400	1000	±0.75	±0.25	±0.25	16
160KG	0	160	kPa	—	400	800	1000	±0.75	±0.25	±0.25	16
250KG	0	250	kPa	—	800	1600	1000	±0.75	±0.25	±0.25	15
400KG	0	400	kPa	—	800	1600	1600	±0.75	±0.25	±0.25	16
600KG	0	600	kPa	—	1700	1700	1700	±0.75	±0.25	±0.25	15
001GG	0	1	MPa	—	1.7	1.7	1.7	±0.75	±0.25	±0.25	16

[1]Working Pressure: The maximum pressure that may be applied to any port of the sensor in continuous use. This pressure may be outside the operating pressure range limits (Pmin. to Pmax.) in which case the sensor may not provide a valid output until presssure is returned to within the operating pressure range. Tested to 1 million cycles, minimum.

[2]Overpressure: The maximum pressure which may safely be applied to the product for it to remain in specification once pressure is returned to the operating pressure range. Exposure to higher pressures may cause permanent damage to the product. Unless otherwise specified this applies to all available pressure ports at any temperature with the operating temperature range.

[3]Burst Pressure: The maximum pressure that may be applied to any port of the product without causing escape of pressure media. Product should not be expected to function after exposure to any pressure beyond the burst pressure.

[4]Common Mode Pressure: The maximum pressure that can be applied simultaneously to both ports of a differential pressure sensor without causing changes in specified performance.

[5]Total Error Band: The maximum deviation from the ideal transfer function over the entire compensated temperature and pressure range. Includes all errors due to offset, full scale span, pressure non-linearity, pressure hysteresis, repeatability, thermal effect on offset, thermal effect on span, and thermal hysteresis (see Figure 1).

[6]Total Error Band after Auto-Zero: The maximum deviation from the ideal transfer function over the entire compensated pressure range for a minimum of 24 hours after an auto-zero operation. Includes all errors due to full scale span, pressure non-linearity, pressure hysteresis, and thermal effect on span.

[7]Effective Number of Bits (ENOB): A measure of the dynamic performance of an analog-to-digital converter (ADC) and its related circuitry. ENOB is defined for the RSC Series per the following equation: ENOB = $\log_2$ (Full Scale Span/Noise).

Table 8. Pressure Range Specifications for ±0.5 inH_2O to ±150 psi

Pressure Range (see Figure 3)	Pressure Range		Unit	Working Pressure[1]	Over Pressure[2]	Burst Pressure[3]	Common Mode Pressure[4]	Total Error Band[5] (%FSS)	Total Error Band after Auto-Zero[6] (%FSS)	Long-term Stability 1000 hr, 25°C (%FSS)	Effective Number of Bits (ENOB) at 20 SPS[7]
	Pmin.	Pmax.									
Absolute											
015PA	0	15	psi	—	30	60	—	±0.75	±0.25	±0.25	16
030PA	0	30	psi	—	60	120	—	±0.75	±0.25	±0.25	16
060PA	0	60	psi	—	120	240	—	±0.75	±0.25	±0.25	16
100PA	0	100	psi	—	250	250	—	±0.75	±0.25	±0.25	16
150PA	0	150	psi	—	250	250	—	±0.75	±0.25	±0.25	16
Differential											
0.5ND	-0.5	0.5	inH_2O	135	270	415	1400	±3	±0.5	±0.5	16
001ND	-1	1	inH_2O	135	270	415	1400	±2	±0.5	±0.35	15
002ND	-2	2	inH_2O	135	270	415	1400	±2	±0.5	±0.35	16
004ND	-4	4	inH_2O	150	300	500	2200	±0.75	±0.25	±0.25	17
005ND	-5	5	inH_2O	150	300	500	2200	±1	±0.5	±0.25	19
010ND	-10	10	inH_2O	175	350	550	4200	±1	±0.25	±0.25	19
020ND	-20	20	inH_2O	175	350	550	4200	±0.75	±0.25	±0.25	16
030ND	-30	30	inH_2O	175	350	550	4200	±0.75	±0.25	±0.25	16
001PD	-1	1	psi	—	10	15	150	±0.75	±0.25	±0.25	15
005PD	-5	5	psi	—	30	40	150	±0.75	±0.25	±0.25	17
015PD	-15	15	psi	—	60	120	150	±0.75	±0.25	±0.25	17
030PD	-30	30	psi	—	120	240	150	±0.75	±0.25	±0.25	17
060PD	-60	60	psi	—	250	250	250	±0.75	±0.25	±0.25	17
100PD	-100	100	psi	—	250	250	250	±0.75	±0.25	±0.25	17
150PD	-150	150	psi	—	250	250	250	±0.75	±0.25	±0.25	17
Gage											
001NG	0	1	inH_2O	135	270	415	1400	±3	±0.5	±0.5	16
002NG	0	2	inH_2O	135	270	415	1400	±2	±0.5	±0.35	15
004NG	0	4	inH_2O	135	270	415	1400	±0.75	±0.25	±0.35	16
005NG	0	5	inH_2O	135	270	415	1400	±0.75	±0.25	±0.25	16
010NG	0	10	inH_2O	150	300	500	2200	±1	±0.25	±0.25	18
020NG	0	20	inH_2O	175	350	550	4200	±0.75	±0.25	±0.25	15
030NG	0	30	inH_2O	175	350	550	4200	±0.75	±0.25	±0.25	15
001PG	0	1	psi	—	10	15	150	±0.75	±0.25	±0.25	14
005PG	0	5	psi	—	30	40	150	±0.75	±0.25	±0.25	16
015PG	0	15	psi	—	30	60	150	±0.75	±0.25	±0.25	16
030PG	0	30	psi	—	60	120	150	±0.75	±0.25	±0.25	16
060PG	0	60	psi	—	120	240	250	±0.75	±0.25	±0.25	16
100PG	0	100	psi	—	250	250	250	±0.75	±0.25	±0.25	16
150PG	0	150	psi	—	250	250	250	±0.75	±0.25	±0.25	16

[1]Working Pressure: The maximum pressure that may be applied to any port of the sensor in continuous use. This pressure may be outside the operating pressure range limits (Pmin. to Pmax.) in which case the sensor may not provide a valid output until presssure is returned to within the operating pressure range. Tested to 1 million cycles, minimum.

[2]Overpressure: The maximum pressure which may safely be applied to the product for it to remain in specification once pressure is returned to the operating pressure range. Exposure to higher pressures may cause permanent damage to the product. Unless otherwise specified this applies to all available pressure ports at any temperature with the operating temperature range.

[3]Burst Pressure: The maximum pressure that may be applied to any port of the product without causing escape of pressure media. Product should not be expected to function after exposure to any pressure beyond the burst pressure.

[4]Common Mode Pressure: The maximum pressure that can be applied simultaneously to both ports of a differential pressure sensor without causing changes in specified performance.

[5]Total Error Band: The maximum deviation from the ideal transfer function over the entire compensated temperature and pressure range. Includes all errors due to offset, full scale span, pressure non-linearity, pressure hysteresis, repeatability, thermal effect on offset, thermal effect on span, and thermal hysteresis (see Figure 1).

[6]Total Error Band after Auto-Zero: The maximum deviation from the ideal transfer function over the entire compensated pressure range for a minimum of 24 hours after an auto-zero operation. Includes all errors due to full scale span, pressure non-linearity, pressure hysteresis, and thermal effect on span.

[7]Effective Number of Bits (ENOB): A measure of the dynamic performance of an analog-to-digital converter (ADC) and its related circuitry. ENOB is defined for the RSC Series per the following equation: ENOB = $\log_2$ (Full Scale Span/Noise).

Figure 4. DIP Package Dimensional Drawings (For reference only: mm [in].)

DIP NN: No ports

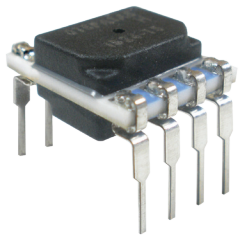

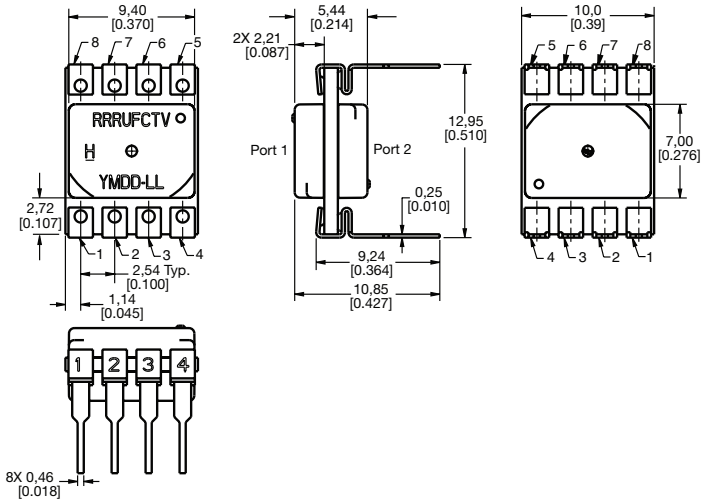

DIP AN: Single axial barbed port

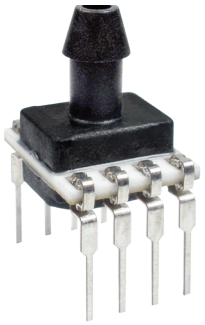

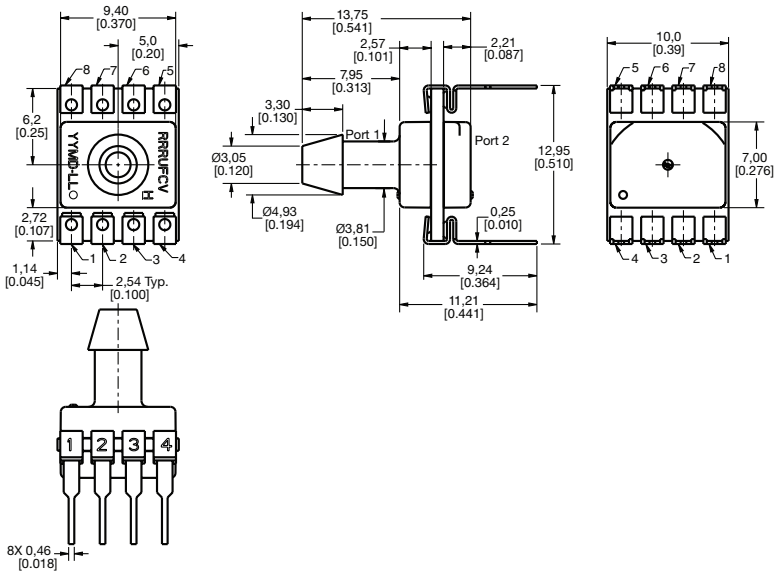

DIP LN: Single axial barbless port

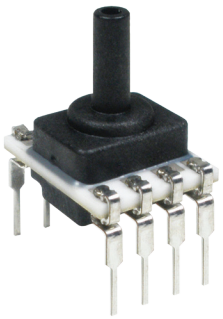

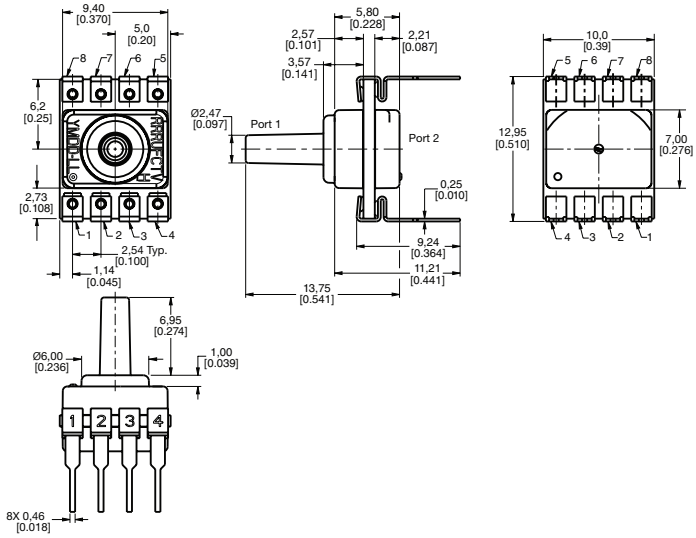

Figure 4. DIP Package Dimensional Drawings (continued)

DIP RN: Single radial barbed port

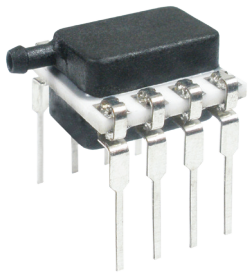

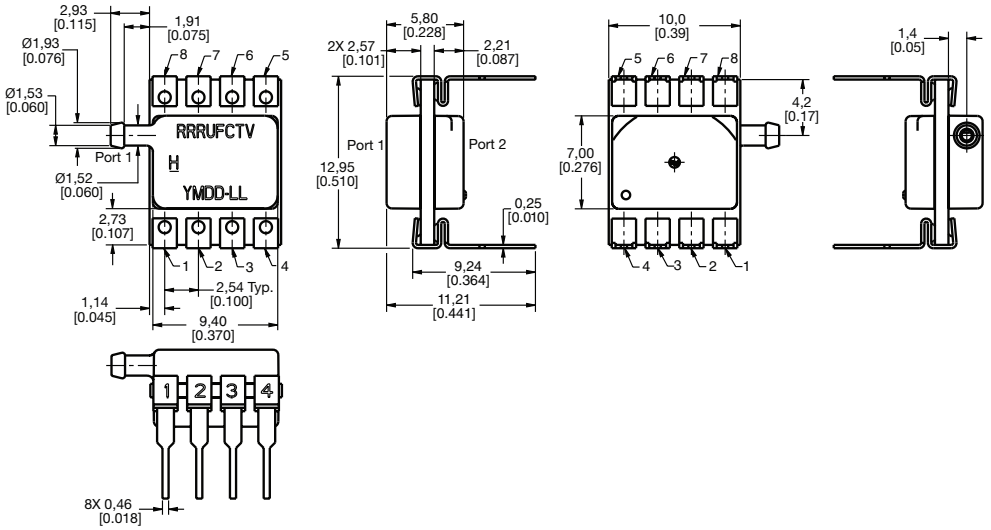

DIP RR: Dual radial barbed ports, same side

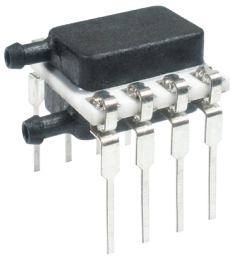

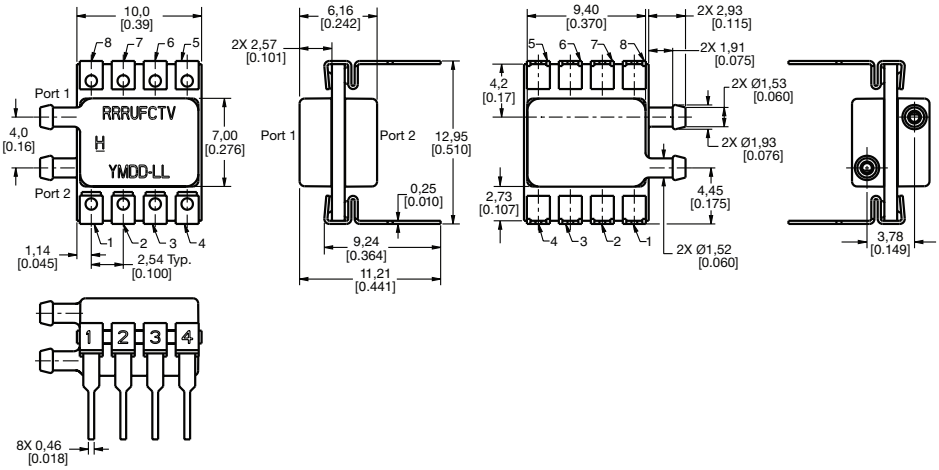

DIP JN: Single radial barbless port

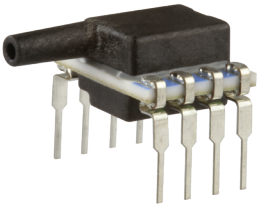

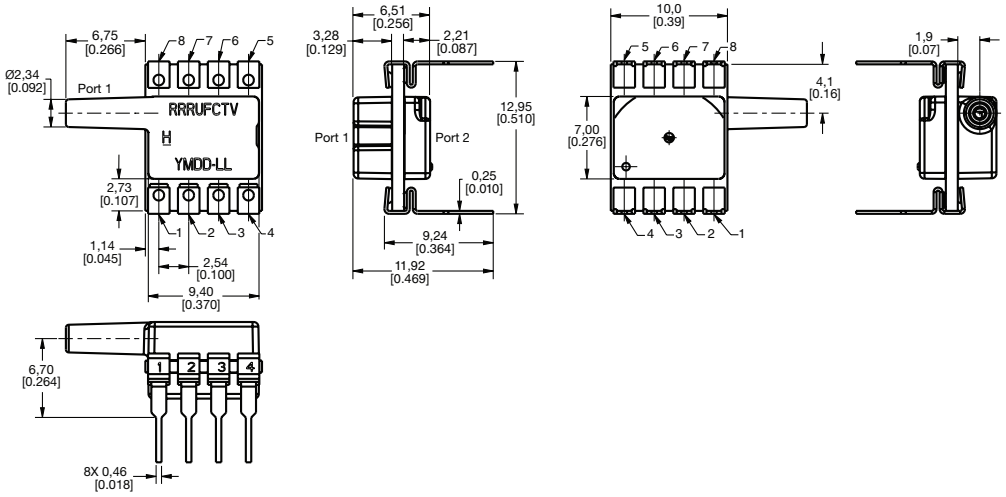

Figure 4. DIP Package Dimensional Drawings (continued)

DIP JJ: Dual radial barbless ports, same side

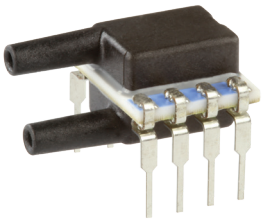

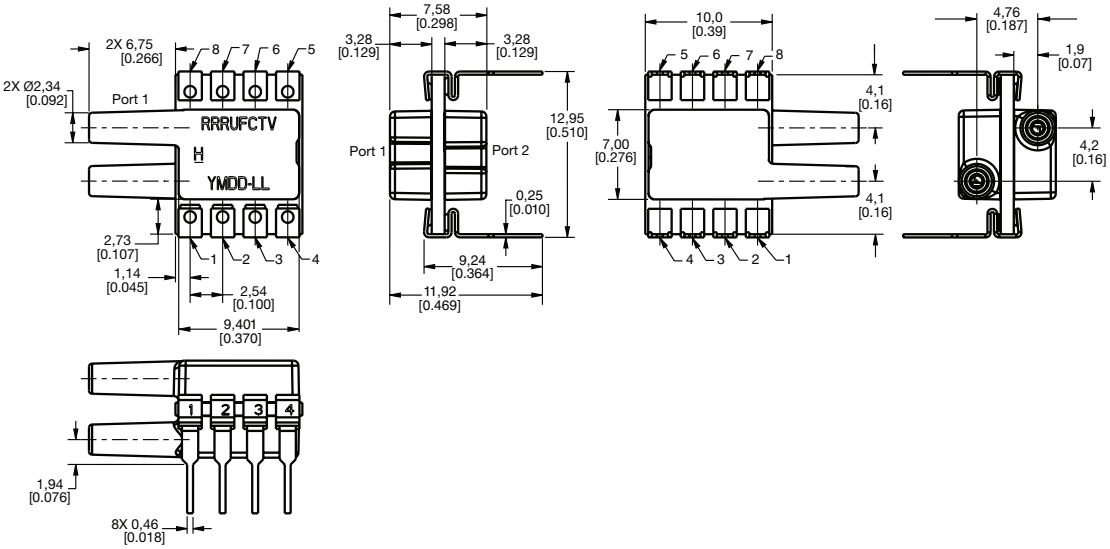

Figure 5. SMT Package Dimensional Drawings (For reference only: mm [in].)

SMT NN: No ports

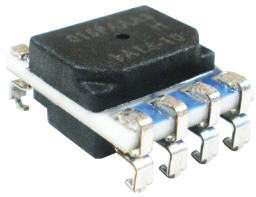

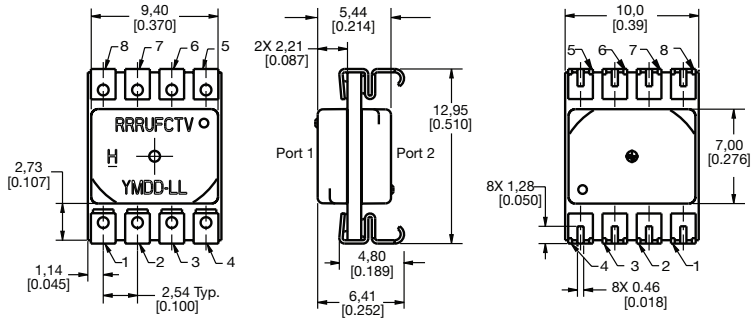

SMT AN: Single axial barbed port

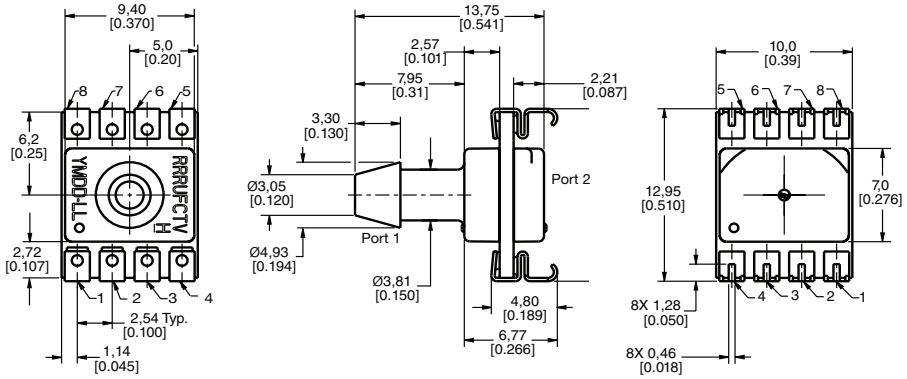

Figure 5. SMT Package Dimensional Drawings (continued)

SMT LN: Single axial barbless port

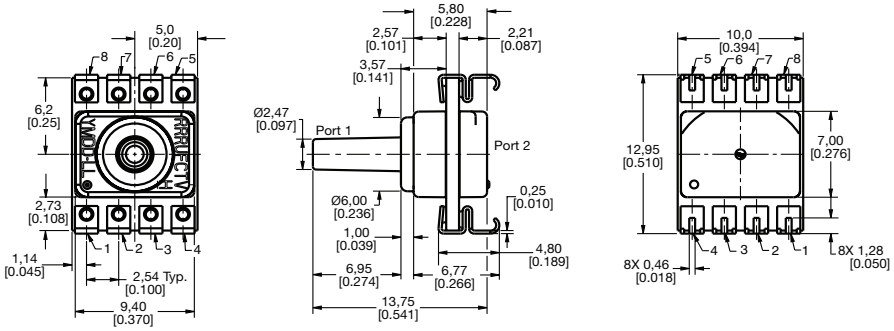

SMT RN: Single radial barbed port

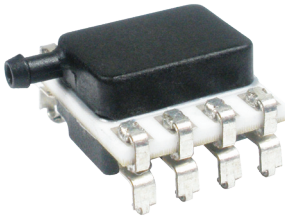

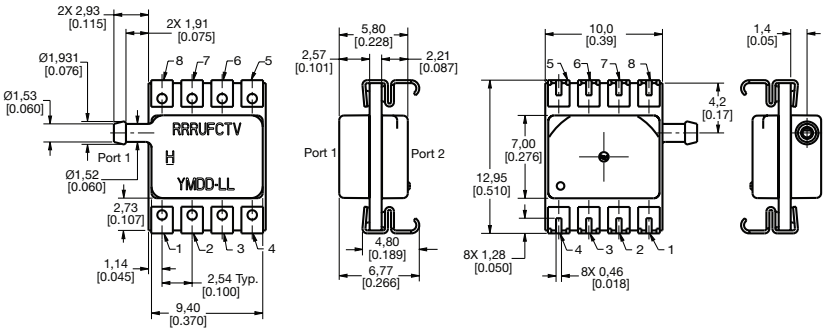

SMT RR: Dual radial barbed ports, same side

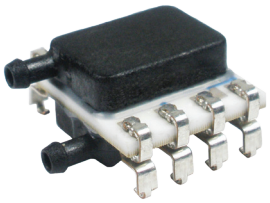

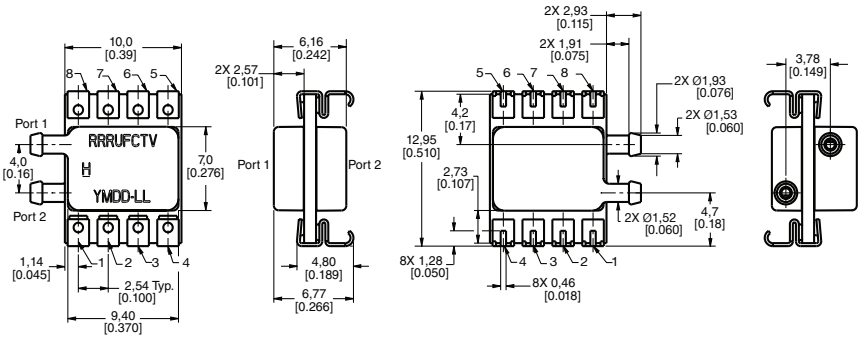

Figure 5. SMT Package Dimensional Drawings (continued)

SMT JN: Single radial barbless port

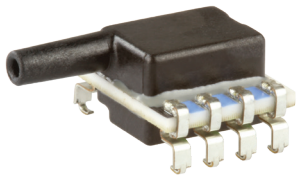

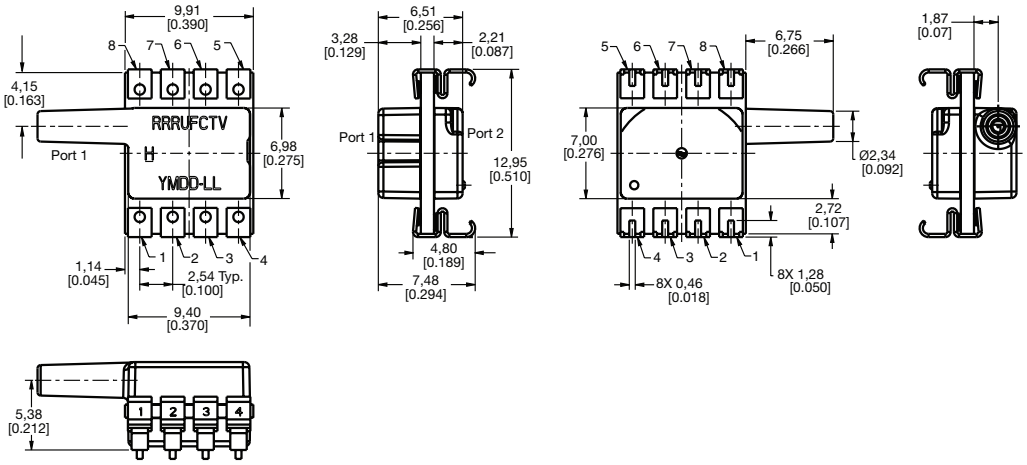

SMT JJ: Dual radial barbless ports, same side

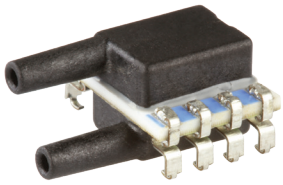

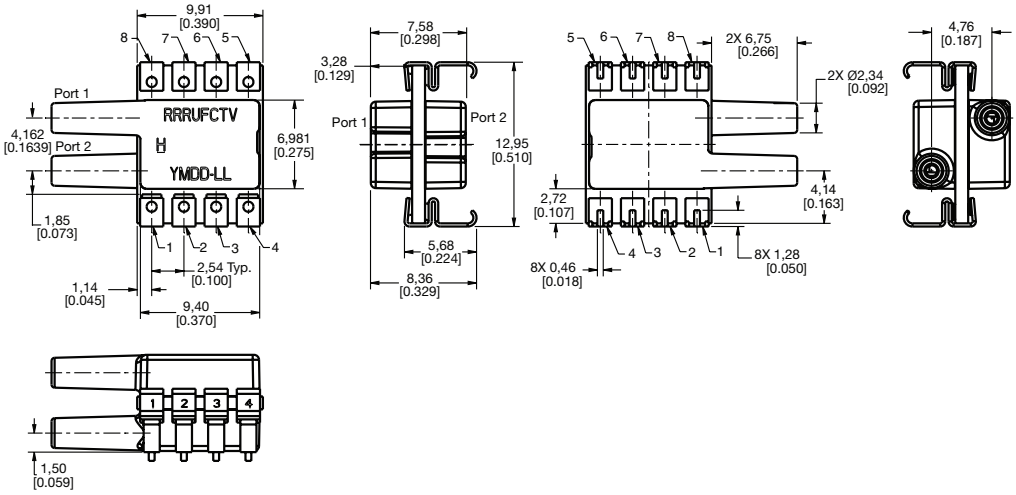

Figure 6. Recommended PCB Pad Layouts

DIP

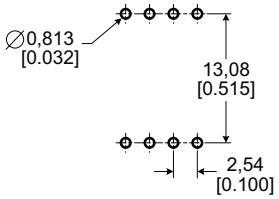

SMT

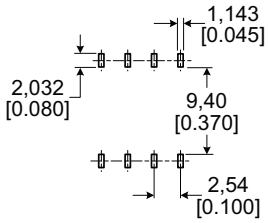

Table 9. Pinout

Pin	Name	Description
1	SCLK	external clock source
2	$\overline{\text{DRDY}}$	data ready: active low
3	DIN	serial data input
4	$\overline{\text{CS_ADC}}$	ADC chip select: active low
5	GND	ground
6	V_{CC}	positive supply voltage
7	$\overline{\text{CS_EE}}$	EEPROM chip select: active low
8	DOUT	serial data output

Figure 7. Recommended Circuit

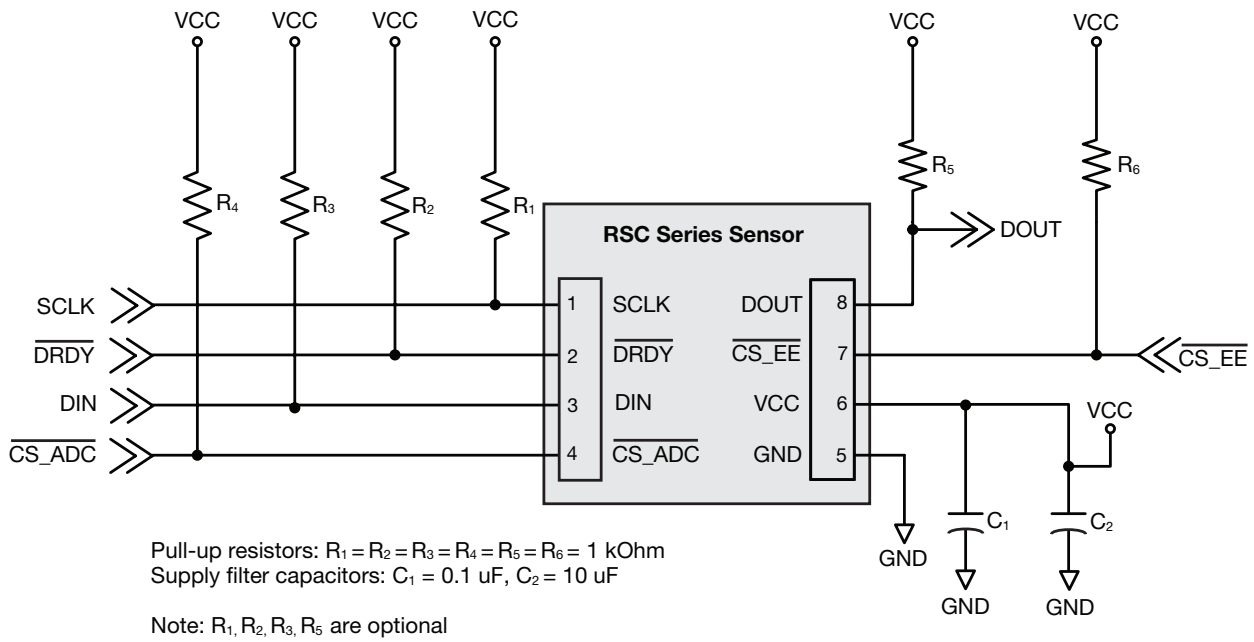

1.0 SYSTEM OVERVIEW

1.1 Major System Blocks (see Figure 1-1)

- A piezoresistive Sense Element that provides a signal that changes when pressure is applied to the device.
- An Analog to Digital Converter (ADC) with an integrated amplifier that measures this signal. (Unlike many conventional sensors, this digital signal is neither compensated nor calibrated.)
- An onboard EEPROM Memory that contains the coefficients for compensating equations that can be used to correct the raw signal and provide a fully temperature-compensated, pressure-calibrated value.

Figure 1-1. Block Diagram

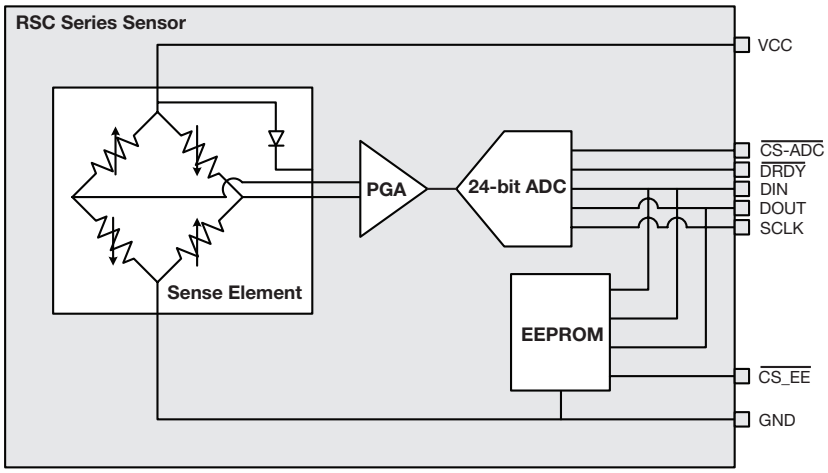

1.2 High-level Operating Sequence

The following operating sequence is required to make the device function. Each step is discussed in detail in the following sections.

1. Read the ADC settings and the compensation values from EEPROM.
2. Initialize the ADC converter using the settings provided in EEPROM.
3. Adjust the ADC sample rate if desired.
4. Command the ADC to take a temperature reading, and store this reading.
5. Give Delay (Example: if sample rate is 330SPS delay for 3.03 ms [1/330 s]).
6. Command the ADC to take a pressure reading, and store this reading.
7. Apply the compensation formulae to the temperature and pressure readings in order to calculate a pressure value.
8. Repeat steps 4, 5 and 6 in a loop to take additional readings.

It is not necessary to take a new temperature reading in conjunction with every pressure reading. If a fast response to pressure is required, it is possible to take several pressure readings in a row and use an earlier temperature reading to compensate. The exact timing of this will be application specific and depend on the rapidity of possible temperature changes. A temperature reading approximately every 100 ms should be adequate for most applications except those with rapid temperature transients. Longer times between temperature readings may be possible for applications where rapid temperature changes are not possible. If multiple pressure readings for a single temperature reading are desired, the sequence of steps above becomes:

4. Command the ADC to take a temperature reading, and store this reading.
5. Command the ADC to take a pressure reading, and store this reading.
6. Apply the compensation formulae to the temperature and pressure readings in order to calculate a pressure value.
7. Repeat steps 5 and 6 in a loop to take additional pressure readings and compensate them.
8. After a pre-determined number of loops, repeat step 4.

1.3 Compensation Mathematics (see Table 1-1)

This section gives a high-level overview of the compensation mathematics. Please refer to Section 2.0 for details on exact numeric formats and EEPROM addresses. It is assumed that all values have been correctly converted to a floating-point decimal format.

Table 1-1. Coefficients Read from EEPROM

Coefficient	Description
P_{Range}	pressure range read from EEPROM
P_{min}	pressure offset read from EEPROM
Eng Units	engineering units read from EEPROM
P_{raw}	uncompensated pressure reading from ADC
T_{raw}	uncompensated temperature reading from ADC
P_{int1}	intermediate value in calculations
P_{int2}	intermediate value in calculations
P_{Comp_FS}	compensated output pressure
P_{Comp}	compensated output pressure, in engineering units

$OffsetCoefficient_3 \ldots OffsetCoefficient_0$ = Correction values from EEPROM
$SpanCoefficient_3 \ldots SpanCoefficient_0$ = Correction values from EEPROM
$ShapeCoefficient_3 \ldots ShapeCoefficient_0$ = Correction values from EEPROM

$$P_{int1} = P_{raw} - (OffsetCoefficient_3 * T_{raw}^3 + OffsetCoefficient_2 * T_{raw}^2 + OffsetCoefficient_1 * T_{raw} + OffsetCoefficient_0)$$

$$P_{int2} = P_{int1} / (SpanCoefficient_3 * T_{raw}^3 + SpanCoefficient_2 * T_{raw}^2 + SpanCoefficient_1 * T_{raw} + SpanCoefficient_0)$$

$$P_{Comp_FS} = ShapeCoefficient_3 * P_{int2}^3 + ShapeCoefficient_2 * P_{int2}^2 + ShapeCoefficient_1 * P_{int2} + ShapeCoefficient_0$$

$$P_{Comp} = (P_{Comp_FS} * P_{Range}) + P_{min} \text{ [Engineering Units]}$$

2.0 SYSTEM INITIALIZATION – EEPROM

The device on-board memory contains serialization, pressure range, ADC configuration and compensation information.

2.1 EEPROM Contents

2.11 Serialization and pressure range information: Stored in bytes 0 to 40 (see Table 2-1).

Table 2-1. Serialization and Pressure Range Information

Relative Address	Item	Detail	Data Type	Byte Order
0	sensor catalog listing		ASCII Char	MSB
1			ASCII Char	
2			ASCII Char	
3			ASCII Char	
4			ASCII Char	
5			ASCII Char	
6			ASCII Char	
7			ASCII Char	
8			ASCII Char	
9			ASCII Char	
10			ASCII Char	
11			ASCII Char	
12			ASCII Char	
13			ASCII Char	
14			ASCII Char	
15			ASCII Char	LSB
16	serial number (YYYYDDDXXXX)	YYYY	ASCII Char	MSB
17			ASCII Char	
18			ASCII Char	
19			ASCII Char	LSB
20		DDD	ASCII Char	MSB
21			ASCII Char	
22			ASCII Char	LSB
23		XXXX	ASCII Char	MSB
24			ASCII Char	
25			ASCII Char	
26			ASCII Char	LSB
27	pressure range		Float	LSB
28				
29				
30				MSB
31	pressure minimum		Float	LSB
32				
33				
34				MSB
35	pressure unit		ASCII Char	MSB
36			ASCII Char	
37			ASCII Char	
38			ASCII Char	
39			ASCII Char	LSB
40	pressure reference		ASCII Char	

2.12 ADC Configuration Settings: Stored in bytes 61, 63, 65 and 67 (See Table 2-2).

Table 2-2. ADC Configuration Setttings

Relative Address	Item	Detail	Data Type	Byte Order
60	ADC configuration math			
61		ADC CONFIG_00	unsigned character	-
62				
63		ADC CONFIG_01	unsigned character	-
64				
65		ADC CONFIG_02	unsigned character	-
66				
67		ADC CONFIG_03	unsigned character	-

2.13 Polynomial coefficients: Stored in bytes 130 to 145 (see Table 2-3).

Table 2-3. Polynomial Coefficients

Relative Address	Item	Detail	Data Type	Byte Order
130	offset matrix	$OffsetCoefficient_0$	float	LSB
131				
132				
133				MSB
134		$OffsetCoefficient_1$	float	LSB
135				
136				
137				MSB
138		$OffsetCoefficient_2$	float	LSB
139				
140				
141				MSB
142		$OffsetCoefficient_3$	float	LSB
143				
144				
145				MSB

2.14 Span coefficients: Stored in bytes 210 to 225 (see Table 2-4).

Table 2-4. Span Coefficients

Relative Address	Item	Detail	Data Type	Byte Order
210	span matrix	$SpanCoefficient_0$	float	LSB
211				
212				
213				MSB
214		$SpanCoefficient_1$	float	LSB
215				
216				
217				MSB
218		$SpanCoefficient_2$	float	LSB
219				
220				
221				MSB
222		$SpanCoefficient_3$	float	LSB
223				
224				
225				MSB

2.15 Shape Coefficients: Stored in bytes 290 to 305 (see Table 2-5).

Table 2-5. Shape Coefficients

Relative Address	Item	Detail	Data Type	Byte Order
290	shape matrix	$ShapeCoefficient_0$	float	LSB
291				
292				
293				MSB
294		$ShapeCoefficient_1$	float	LSB
295				
296				
297				MSB
298		$ShapeCoefficient_2$	float	LSB
299				
300				
301				MSB
302		$ShapeCoefficient_3$	float	LSB
303				
304				
305				MSB

2.16 Checksum address: Stored in byte 450 (see Table 2-6).

Table 2-6. Checksum Address

Relative Address	Item	Detail	Data Type	Byte Order
450	Checksum		unsigned short int	LSB
451				MSB

Any unspecified EEPROM addresses below address 451 are reserved for future enhancements.

2.2 EEPROM Communications

The $\overline{CS_EE}$ pin of the sensor selects the EEPROM for SPI communication. When $\overline{CS_EE}$ is high, the EEPROM is in stand-by mode, and communications with the ADC are possible. When $\overline{CS_EE}$ is low, the EEPROM is enabled. $\overline{CS_EE}$ and $\overline{CS_ADC}$ must never be simultaneously low. EEPROM operates in SPI mode 0 where CPOL = 0 and CPHA = 0 (0,0) and mode 3 where CPOL = 1 and CPHA = 1 (1,1).

Each memory of EEPROM contains 8-bit data or one byte. To read from memory, the host sends an EAD_EEPROM instruction [0000 X011] followed by an 8-bit address. The 'X' bit in the read instruction is the ninth (MSB) address bit.

Example:
1. To read data at address 1, the command sequence is [0000 **0**011] [0000 0001].
2. To read data at address 290, the command sequence is [0000 **1**011] [0010 0010].

After receiving the last address bit, the EEPROM responds by shifting out data on the DOUT pin, as shown in Figure 2-1. Sequentially stored data can be read out by simply continuing to run the clock. The internal address pointer is automatically incremented to the next higher address as data is shifted out. After reaching the highest memory address, the address counter "rolls over" to the lowest memory address, and the read cycle can be continued indefinitely. The read operation is terminated by taking $\overline{\text{CS_EE}}$ high.

Figure 2-1. EEPROM Communications

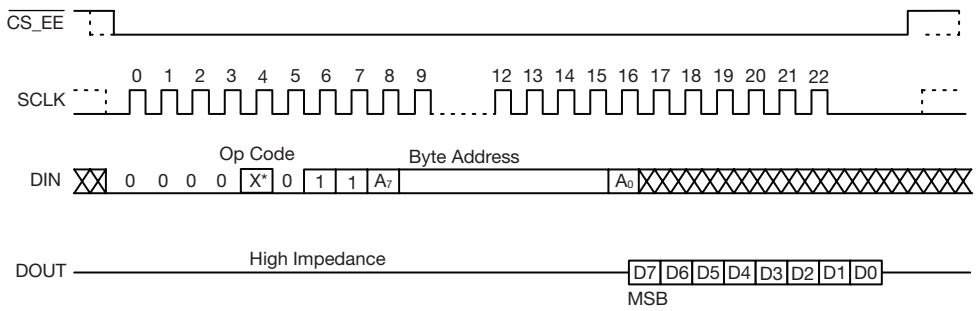

3.0 SYSTEM OPERATION – ADC

3.1 ADC Communications and Initialization

The $\overline{\text{CS_ADC}}$ pin of the sensor selects the ADC for SPI communication. When $\overline{\text{CS_ADC}}$ is high, the ADC is in stand-by mode, and communications with the EEPROM are possible. When $\overline{\text{CS_ADC}}$ is low, the ADC is enabled. $\overline{\text{CS_EE}}$ and $\overline{\text{CS_ADC}}$ must never be simultaneously low. The ADC interface operates in SPI mode 1 where CPOL = 0 and CPHA = 1.

The ADC has four configuration registers. Three registers are 'reserved' and must be set to the default values contained in EEPROM. These registers contain setup values that are specific to the pressure sense element, and should not be changed. Configuration register 1 toggles the ADC between pressure and temperature readings and controls the data rate of the ADC.

To program a configuration register, the host sends a WREG command [0100 RRNN], where 'RR' is the register number and 'NN' is the number of bytes to be written –1.

Example: To write the single byte default configuration to register 3, the command is [0100 1100]. It is possible to write the default values to all configuration registers with a single command by setting the address to 0 and the number of bytes to (4 -1) = 3, followed by all four configuration bytes in sequence. The command for this is [0100 0011].

The ADC is capable of full-duplex operation, which means commands are decoded at the same time that conversion data are read. Commands may be sent on any 8-bit data boundary during a data read operation. This allows for faster toggling between pressure and temperature modes. A WREG command can be sent without corrupting an ongoing read operation. Figure 3-1 shows an example of sending a WREG command while reading conversion data. Note that after the command is clocked in (after the 32nd SCLK falling edge), the sensor changes settings and starts converting using the new register settings. The WREG command can be sent on any of the 8-bit boundaries – the first, ninth, 17th or 25th SCLK rising edges as shown in Figure 3-1.

Figure 3-1. ADC Communciations and Initialization

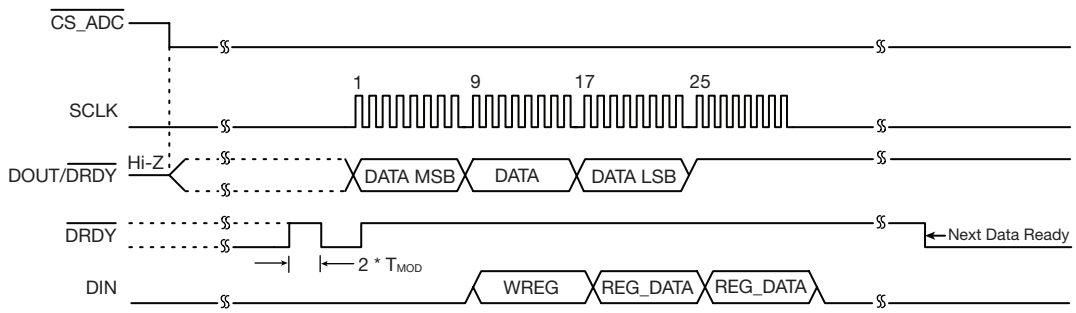

3.2 Programming the Data Rate and Pressure/Temperature Modes

The ADC configuration register 1 contains the settings for the data rate and determines whether the ADCS takes a pressure reading or a temperature reading. This register can be changed as shown in Table 3-1 by using a WREG command. Typical data conversion times are shown in Table 3-2.

Table 3-1. ADC Configuration Register

ADC_CONFIG_01 [HEX]	Bit 7	Bit 6	Bit 5	Bit 4	Bit 3	Bit 2	Bit 1	Bit 0
01h	DR[2:0]			MODE[1:0]		1	TS	0
	Data Rate <u>Normal Mode (SPS)</u> 000: 20 (default) 001: 45 010: 90 011: 175 100: 330 101: 600 110: 1000 111: not used <u>Fast Mode (SPS)</u> 000: 40 (default) 001: 90 010: 180 011: 350 100: 660 101: 1200 110: 2000 111: not used			Operating Mode 00: **Normal Mode** (256 kHz modulator clock) (default) 01: not used 10: **Fast Mode** (512 kHz modulator clock)		set to 1	Temperature Sensor Mode 0: Pressure (sense element) reading 1: Temperature reading	set to 0

Table 3-2. Typical Data Conversion Times

Normal Mode		Fast Mode	
SPS	**Time (ms)**	**SPS**	**Time (ms)**
20	49.99	40	25.00
45	22.25	90	11.12
90	11.26	180	5.63
175	5.78	350	2.89
330	3.04	660	1.52
600	1.68	1200	0.84
1000	1.01	2000	0.51

3.3 ADC Reset Command

The ADC reset command RESET [0000 0110] resets the ADC to the default values.

3.4 ADC Programming Sequence – Power Up

At power-up it is necessary to initialize all the ADC registers. The sequence is:

1. Set the $\overline{\text{CS_EE}}$ to high to disable EEPROM communication.
2. Set the $\overline{\text{CS_ADC}}$ to low to enable ADC communication.
3. Initialize all four configuration registers to the default values in the EEPROM's Relative addresses 61, 63, 65 and 67 (see the MSB bytes in see Section 3.0) by sending a WREG command to address 0 [0100 0011] followed by the four bytes of data:
   - Send the the Reset command (06h) to make sure the ADC is properly reset after powerup
   - Write the respective register configuration using the WREG command (Example: 43h, 0Ah, 84h, 40h, and 00h)

Both a temperature and an uncompensated pressure reading are necessary to calculate a compensated value (see Section 3.5).

3.5 ADC Programming and Read Sequence – Temperature Reading (see Figure 3-2 and Table 3-3)

1. Set the $\overline{\text{CS_ADC}}$ low to enable ADC communication.
2. Configure the sensor to temperature mode and the desired data rate by setting configuration register 1 by sending a WREG command to address 1, [0100 0100] followed by the single configuration byte. Bit 1 (TS) of the configuration register should be set to 1.
3. Send 08h command to start data conversion on ADC.
4. The sensor will start to output the requested data on DOUT at the first SCLK rising edge after the command byte is received.

Figure 3-2. ADC Programming and Read Sequence – Temperature Reading

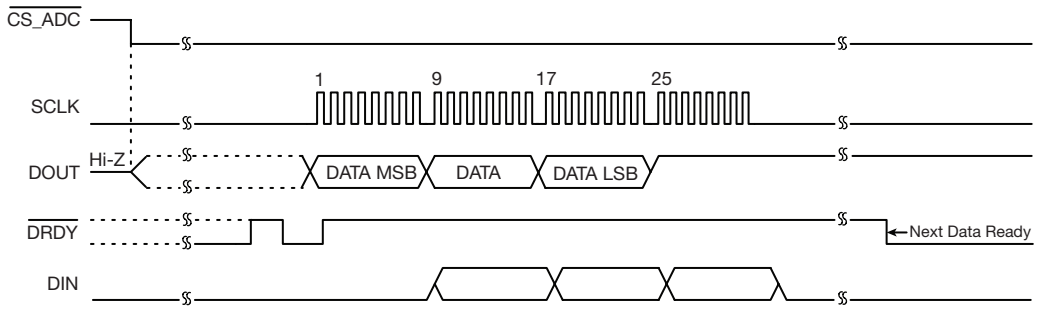

5. Interpret the data as follows: Temperature data are output starting with MSB. When reading 24 bits, the first 14 bits are used to indicate the temperature measurement result. The last 10 bits are random data and must be ignored. Negative temperature is represented in 2's complement format. MSB = 0 indicates positive result, MSB = 1 indicates negative value.

   To convert the digital value to a Celsius temperature, first check if the MSB is 0 or 1. If the MSB = 0, simply multiply the decimal code by 0.03125°C to obtain the result. If the MSB = 1, subtract 1 from the result and complement all bits, multiply the result by -0.03125°C.

Table 3-3. Data Interpretation Table

Temperature (°C)	Digital Output (Binary)	Hex
128	01 0000 0000 0000	1000
127.96875	00 1111 1111 1111	0FFF
100	00 1100 1000 0000	0C80
80	00 1010 0000 0000	0A00
75	00 1001 0110 0000	0960
50	00 0110 0100 0000	0640
25	00 0011 0010 0000	0320
0.25	00 0000 0000 1000	0008
0	00 0000 0000 0000	0000
-0.25	11 1111 1111 1000	3FF8
-25	11 1100 1110 0000	3CE0
-40	11 1011 0000 0000	3B00

Example 1: The ADC reads back 0960h: 0960h has an MSB = 0. (0960h) × (0.03125°C) = (2400) × (0.03125°C) = 75°C
Example 2: The ADC reads back: 3CE0h: 3CE0h has an MSB = 1. Complement the result: 3CE0h = 0320h (0320h) × (–0.03125°C) = (800) × (–0.03125°C) = –25°C

3.6 ADC Programming and Read Sequence – Pressure Reading (see Figure 3-3)

1. Set the $\overline{\text{CS_ADC}}$ low to enable ADC communication.
2. Configure the sensor to the pressure mode and the desired data rate by setting configuration register 1 by sending a WREG command to address 1, [0100 0100] followed by the single configuration byte. Bit 1 (TS) of the configuration register should be set to 0.
3. Send 08h command to start data conversion on ADC.
4. The sensor will start to output the requested data on DOUT at the first SCLK rising edge after the command byte is received.

Figure 3-3. ADC Programming and Read Sequence – Pressure Reading

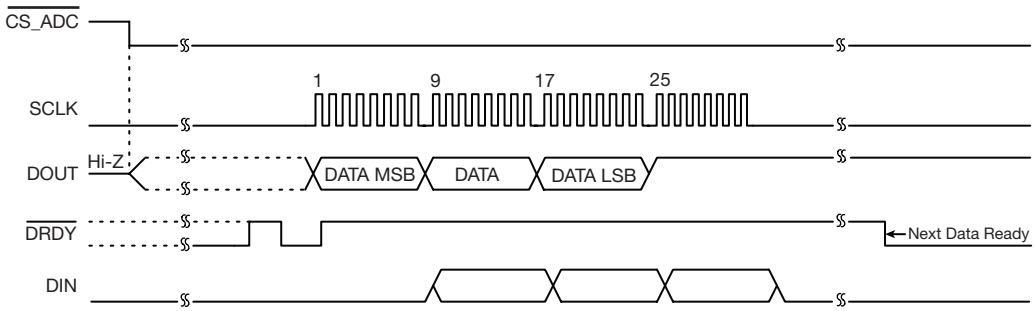

5. Interpret the data as shown in Table 3-4. Pressure data are output starting with MSB, in 24-bit 2's complement format.

Table 3-4. CompReturn_Struct

Input Signal, VIN (AINP-AINN)	DEAL OUTPUTCODE
≥+FS(2^{23} - 1) / 2^{23}	7FFFFFh
+FS / 2^{23}	000001h
0	0
-FS / 2^{23}	FFFFFh
≤ -FS	800000h

4.0 EXAMPLE SOFTWARE

4.1 Data Types

Specific data types defined by the Pressure_Comp module defined in "Pressure_Comp.h" are needed while interacting with the pressure compensation function (see Table 4-1).

Table 4-1. Data Types

Name	Description	
CompStatus_Enum	Provides an enumerated data type to hold the status of pressure compensation module; pressure compensation states are given below:	
	COMPINIT_OK	Compensation init successful
	COMPINIT_NOK	Compensation init failure
	CRC_FAILURE	CRC check failure
	IP_PRESSURE_OUTOFRANGE	Input pressure out of range
	IP_TEMP_OUTOFRANGE	Input temperature out of range
	PRESSURE_VALID	Output pressure is valid
	PRESSURE_INVALID	Output pressure is invalid
CompReturn_Struct	Provides structured a data type containing two elements such as f32PressureOutput and CompStatus; details are given below:	
	f32PressureOutput	Provides output pressure of "float" data type
	CompStatus	Provides status of pressure compensation of "CompStatus_Enum" data type

4.2 Function Descriptions – Pressure_Comp.c

"Pressure_Comp.c" provides the source code that provides functions to initialize the module by extracting all the coefficients from EEPROM after CRC validation and extracting the coefficients from it. This file also provides the function to compensate the pressure by having uncompensated raw pressure and temperature input. The "Pressure_Comp.h" file provides the interfaces to the functions implemented in the "Pressure_Comp.c" file that need to be included in the application where the pressure compensation is needed. Dependencies: "float.h", "crc.h" (see Tables 4-2, 4-3 and 4-4).

Table 4-2. Compensate_Pressure_Init()

Entity	Name	Description
Function	Compensate_Pressure_Init	Initializes the pressure compensation module
Parameter	u8EEPROM_ptr	Data Type: (unsigned char *) Provides a pointer to the EEPROM image which is read byte-wise in a contiguous memory buffer
Return Type	CompStatus_Enum	Returns the status of compensation initialization (either of the compensation states given below) COMPINIT_OK Compensation init successful COMPINIT_NOK Compensation init failure

Table 4-3. Compensate_Pressure()

Entity	Name	Description
Function	Compensate_Pressure	Provides the compensated pressure based on the polynomial correction
Parameter	u32PressureInput	Data Type: (unsigned long int) Inputs the uncompensated pressure as read by the sensor
	u32Temperature	Data Type: (unsigned long int) Inputs the temperature as read by the sensor
Return type	CompReturn_Struct. CompStatus	Data Type: (CompStatus_Enum) Provides the status of the compensation initialization
	CompReturn_Struct. f32PressureOutput	Data Type: (float) Returns the compensated pressure output in engineering units per the sensor's specification

Table 4-4. AutoZero_Pressure()

Entity	Name	Description
Function	Autozero_Pressure	Sets a known, preset pressure to 50% full scale pressure (this function should only be used at a known preset pressure that has to be output as 50% full scale pressure) The term "autozero" refers to 50% full scale pressure
Parameter	u32PressureZero	Data Type: (unsigned long int) Inputs uncompensated pressure as read by the TSHUR sensor at preset 50% full scale pressure
	u32TemperatureZero	Data Type: (unsigned long int) Inputs temperature as read by the TSHUR sensor at preset 50% full scale pressure
Return type	CompReturn_Struct. CompStatus	Data Type: (CompStatus_Enum) Returns the status of AutoZero Correction

4.3 Checksum Calculation

"crc.c" provides a source code which, in turn, provides the functions to compute the 16-bit CCITT CRC. "crc.h" is an interface file for "pressure_Comp.c" to get the interfaces to the functions which are implemented in the "crc.c"file (see Table 4-5).

Table 4-5. CrcComputeCrc16()

Entity	Name	Description
Function	CrcComputeCrc16	Computes the 16-bit CRC-16-CCITT checksum Uses a lookup table to compute the CRC-16-CCITT checksum with the generator polynomial = 0x1021
Parameter	u8Data	Data Type: (unsigned char) Provides the current data passed to compute the CRC
	u16CurrCrc	Data Type: (unsigned short int) Provides the previously computed CRC Checksum
Return type	unsigned short int	Returns the updated CCITT 16 bit CRC

4.4 Compensation Sequence

1. Set the endianness of the processor/controller where the sample code is planned to be integrated in “Pressure_Comp.h” file Defines section (set only one of the following):
   - If little-endian, set “#define LITTLE_ENDIAN_FORMAT”
   - If big-endian, set “#define BIG_ENDIAN_FORMAT”
2. Include the four source files “Pressure_Comp.c”, “Pressure_Comp.h”, “crc.c”, “crc.h” into the project build directory structure.
3. Include the interface “#include “Pressure_Comp.h” in the source file where the pressure needs to be compensated.
4. Read and store the EEPROM contents in the application memory.
5. Initialize the “Pressure_Comp” module by calling the Compensate_Pressure_Init() function by passing the buffer pointer to the function. Check for the return status of type “CompStatus_Enum” ensure the same is “COMPINIT_OK”.
6 Set the reference pressure and temperature at which the AutoZero correction should happen. Read the raw pressure and temperature data from the sensor, pass the same as parameters to the AutoZero_Pressure() function. Check for the return status of type “CompStatus_Enum” to ensure it is the same as “COMPINIT_OK”.
7. Read the raw pressure and temperature data from the sensor, pass the same as parameters to the Compensate_Pressure() function. Check “CompReturn_Struct.CompStatus” returned is PRESSURE_VALID and get the compensated pressure data from “CompReturn_Struct. f32PressureOutput”.

NOTICE

Initialization of the “Pressure_Comp” module is done by calling the Compensate_Pressure_Init() function prior to calling the Compensate_Pressure() function. If the initialization is not successful the same status is outputted from the Compensate_Pressure() function. When the Compensate_Pressure() function returns any status other than the PRESSURE_VALID status, the output pressure data should be discarded and should not be processed further.

4.5 Constraints

The following considerations must be met to ensure the compiler settings are set to achieve the data type sizes shown in Table 4-6.

- Ensure the “float” data type is as per the IEEE 754 single-precision binary floating-point format: binary32.
- Ensure the endianness of the microcontroller has been configured correctly in the “Pressure_Comp.h” function.
- Ensure the sample code has a minimum of 1 kB of RAM for its operation.

Table 4-6. Data Type Sizes

Data Type	Size
Unsigned char 1	1 byte
Float	4 byte (IEEE754)
Unsigned short int	2 byte
Unsigned long int	4 byte

NOTICE

The sample code provided has been tested on a limited number of microcontrollers and compliers to ensure proper functionality on a well defined/designed target system. The application developer needs to ensure compiler dependence as well as compatibility of the code with target environment.

5.0 SENSOR OFFSET ZERO CORRECTION PROCEDURE

Offset correction is a compensation technique based on sampling the output at a known reference condition within the compensated temperature and compensated pressure range of the sensor. Typically, a zero pressure reference, such as atmospheric pressure (or equal pressures on both pressure ports for a differential device), is used to allow the external correction of the offset error. Use the following sequence:

1. Set the sensor to zero pressure.
2. Measure P_{raw} and T_{raw} at a known zero reference (P_{raw0}, T_{raw0}, for example).
3. Calculate $P_{raw_AZero} = (OffsetCoefficient_3 * T_{raw0}^3 + OffsetCoefficient_2 * T_{raw0}^2 + Offset\ Coefficient_1 * T_{raw0} + OffsetCoefficient_0) - P_{raw0}$.
4. Add the P_{raw_AZero} value to all P_{raw} values for use in the standard algorithm (see Section 1.3).
5. Calculate P_{int1} and P_{int2} as usual but use the modified P_{raw} values.

ADDITIONAL INFORMATION

The following associated literature is available on the Honeywell web site at sensing.honeywell.com:

The following associated literature is available at sensing.honeywell.com:

- Product line guide
- Product range guide
- Installation instructions
- Application information
- Sensor Evaluation Kit (SEK001) information including user instructions and software downloads

Find out more

Honeywell Sensing and Internet of Things services its customers through a worldwide network of sales offices and distributors. For application assistance, current specifications, pricing or the nearest Authorized Distributor, visit sensing.honeywell.com or call:

USA/Canada	+1 302 613 4491
Latin America	+1 305 805 8188
Europe	+44 1344 238258
Japan	+81 (0) 3-6730-7152
Singapore	+65 6355 2828
Greater China	+86 4006396841

⚠ WARNING
PERSONAL INJURY

DO NOT USE these products as safety or emergency stop devices or in any other application where failure of the product could result in personal injury.

Failure to comply with these instructions could result in death or serious injury.

⚠ WARNING
MISUSE OF DOCUMENTATION

- The information presented in this datasheet is for reference only. Do not use this document as a product installation guide.
- Complete installation, operation, and maintenance information is provided in the instructions supplied with each product.

Failure to comply with these instructions could result in death or serious injury.

Warranty/Remedy

Honeywell warrants goods of its manufacture as being free of defective materials and faulty workmanship during the applicable warranty period. Honeywell's standard product warranty applies unless agreed to otherwise by Honeywell in writing; please refer to your order acknowledgement or consult your local sales office for specific warranty details. If warranted goods are returned to Honeywell during the period of coverage, Honeywell will repair or replace, at its option, without charge those items that Honeywell, in its sole discretion, finds defective. **The foregoing is buyer's sole remedy and is in lieu of all other warranties, expressed or implied, including those of merchantability and fitness for a particular purpose. In no event shall Honeywell be liable for consequential, special, or indirect damages.**

While Honeywell may provide application assistance personally, through our literature and the Honeywell web site, it is buyer's sole responsibility to determine the suitability of the product in the application.

Specifications may change without notice. The information we supply is believed to be accurate and reliable as of this writing. However, Honeywell assumes no responsibility for its use.

Honeywell
Sensing and Internet of Things
830 East Arapaho Road
Richardson, TX 75081
sensing.honeywell.com

32321348-D-EN | D | 06/20
© 2020 Honeywell International Inc.

Honeywell

Общество с ограниченной ответственностью «МосЧип» ИНН 7719860671 / КПП 771901001
Адрес: 105318, г.Москва, ул.Щербаковская д.3, офис 1107

Данный компонент на территории Российской Федерации

Вы можете приобрести в компании MosChip.

Для оперативного оформления запроса Вам необходимо перейти по данной ссылке:

http://moschip.ru/get-element

Вы можете разместить у нас заказ для любого Вашего проекта, будь то серийное производство или разработка единичного прибора.

В нашем ассортименте представлены ведущие мировые производители активных и пассивных электронных компонентов.

Нашей специализацией является поставка электронной компонентной базы двойного назначения, продукции таких производителей как XILINX, Intel (ex.ALTERA), Vicor, Microchip, Texas Instruments, Analog Devices, Mini-Circuits, Amphenol, Glenair.

Сотрудничество с глобальными дистрибьюторами электронных компонентов, предоставляет возможность заказывать и получать с международных складов практически любой перечень компонентов в оптимальные для Вас сроки.

На всех этапах разработки и производства наши партнеры могут получить квалифицированную поддержку опытных инженеров.

Система менеджмента качества компании отвечает требованиям в соответствии с ГОСТ Р ИСО 9001, ГОСТ РВ 0015-002 и ЭС РД 009

Офис по работе с юридическими лицами:

105318, г.Москва, ул.Щербаковская д.3, офис 1107, 1118, ДЦ «Щербаковский»

Телефон: +7 495 668-12-70 (многоканальный)

Факс: +7 495 668-12-70 (доб.304)

E-mail: info@moschip.ru

Skype отдела продаж:
moschip.ru
moschip.ru_4
moschip.ru_6
moschip.ru_9