Enclosures and cable glands
Catalogue 2013/2014
Let's connect.

Klippon® – enclosure system

Weidmüller

The World of Industrial Connectivity

As experienced experts we support our customers and partners around the world with products, solutions and services in the industrial environment of power, signal and data. Immerse yourself in our world of Industrial Connectivity.
Let's connect.

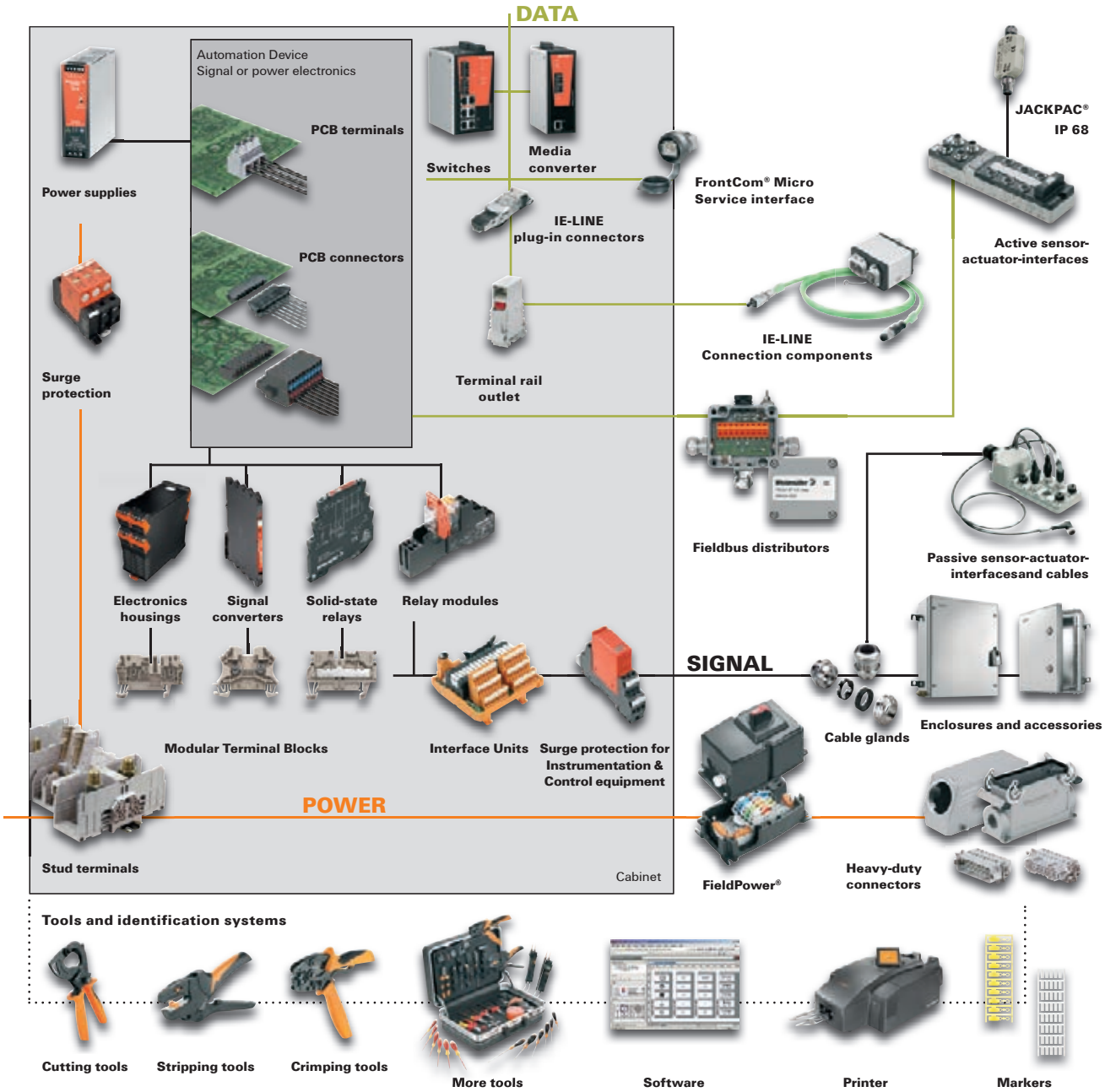

Dear Customers,

The PDF versions of our catalogues offer practical additional functions, helping you to find your way around our product range and simplifying the ordering process.

In addition to the catalogue, the PDF also contains:

- Internal page links
- Links to the online catalogue

Try it out for yourself. Click the order number to obtain more detailed information and close-up images via you web browser. The links in the PDF file also enable you to go directly to the next desired catalogue page.

Further Weidmüller product catalogues can be accessed by clicking the following:

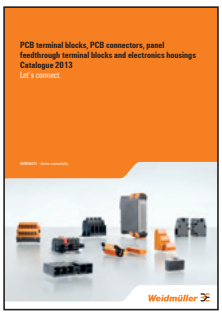

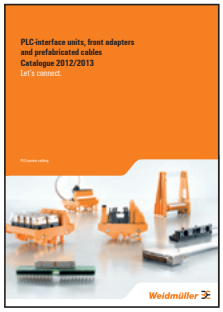

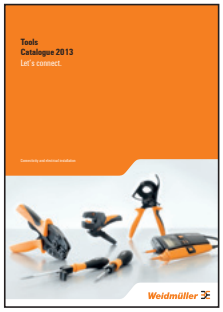

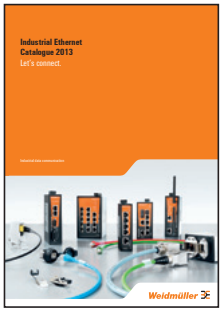

Enclosures and Cable Glands
Catalogue 5

Enclosures and Cable Glands

Introduction

Enclosures

Cable entries

Cable entry system

Tools

Appendix

Weidmüller Solutions & Service

Technical appendix

Index — Search according to type or order number, Addresses worldwide

Enclosures and Cable Glands

Enclosure overview, introduction
Page B.2

Klippon® TB MH
Page B.15

Klippon® TB QL
Page B.41

Klippon® TB FS
Page B.67

NEW

Klippon® TBi QL
Page B.93

NEW

Klippon® TBi FS
Page B.107

NEW

Klippon® STB
Page B.120

Klippon® K
Page B.130

Klippon® POK
Page B.166

TBF Range
Page B.194

MPC Range
Page B.202

FPC Range
Page B.209

Standard cable glands - Plastic
Page C.6

Standard cable glands - Brass
Page C.9

Cable glands for HDC RockStar®
Page C.14

EMC cable glands
Page C.15

Cable glands - stainless steel
Page C.17

Klippon® cable glands
Page C.30

Accessories - Lock nuts
Page C.46

Accessories - IP washer
Page C.51

Accessories - Shrouds
Page C.57

Sealing plugs
Page C.60

Adaptors
Page C.67

Compensating elements
Page C.69

Enclosures and Cable Glands

Cable entry system - Cabtite
Page D.2

Tools
Page E.2

Enclosures and Cable Glands

Enclosures and Cable Glands Introduction A.2

Klippon® – Proven over the years

The Klippon® brand has long stood for competence and quality in enclosures – in particular for industrial standard applications and for applications in explosive and harsh environments. Klippon® is a trademark of the Weidmüller Group, which operates worldwide in 70 countries through its sales offices, production facilities and sales agencies.

Weidmüller had already started producing enclosures in the 1960s. Weidmüller has demonstrated its reputation as a competent and reliable partner innumerable times. Weidmüller's name has stood for innovative products that can cope with even the most demanding market needs since then.

Weidmüller meets these requirements with a range of steel enclosures from the Klippon® TB range, available in Multi-Hinge (MH), Quarter-Lock (QL) and Fixing-Screw (FS) versions, and from the new Klippon® TBi range, available in Quarter-Lock (QL) and Fixing-Screw (FS) versions, as well as the Klippon® STB range and the aluminium enclosures of the Klippon® K range. The portfolio is complimented by the polyester enclosures of the Klippon® POK range and polycarbonate enclosures. In addition, a wide range of different accessories are available including cable glands, sealing plugs, adaptors, pressure compensation elements, etc. Regardless of the application being designed, Weidmüller offers many customised enclosure and individually tailored services to its customers. These include turnkey enclosure solutions with customer specific configurations (such as mounting rails, drilled holes, cable glands, cut-outs, special coatings, etc.).

Additional information can be found in Section W – Technical Appendix.

Harmonisation – the key to market success!

Weidmüller's products and services meet not only its own internal high standards, but also international quality and safety standards. The Klippon® TB enclosure range is one of the first products to be approved and certified as being compliant with IEC /EN 60079. This range of standards provides a harmonised approach to the development and manufacture of equipment for use in potentially explosive atmospheres.

Weidmüller enclosures are specially tailored to meet the ever changing and extremely harsh environments of these industries. Certified in accordance with international standards, they also meet the new ATEX and IECEx regulations for potentially explosive atmospheres and have further certifications for use in standard industrial applications. You can find innovative solutions from Weidmüller everywhere; from power distribution or control and monitoring systems in boiler and turbine control systems, in fuel management and combustion control systems, or in transmission and distribution applications.

Experts in EX for application-specific solutions

Weidmüller's Customer-specific Solutions division offers application-specific EX solutions. Our competent team is here to take care of each individual customer requirement.

Special measures must be taken to guarantee employee health and safety in explosive hazard areas. This is regulated by the ATEX European Community directives 1999/92/EC and 94/9/EC, which classify the various areas of danger and associated selection of explosion-protected equipment into zones.

Weidmüller's customer-specific production is monitored by a notified body in accordance with European regulations. It meets all the requirements of the IECEx scheme for equipment based on the standards of the International Electrotechnical Commission.

More on this can be found in chapter W - Technical Appendix.

When quality is the key

Weidmüller's enclosures are often used in harsh environments. They remain reliable for many years thanks to the high quality levels, even when exposed to external influences like water, dust, hard impacts, shock, vibration, corrosion, and extreme temperature fluctuations.

All components used in potentially explosive atmospheres are subject to strict safety regulations and are checked to the finest detail in terms of their functionality as well as their resistance and resilience against the prevailing environmental conditions.

As each enclosure is only as strong as its weakest point, Weidmüller consistently ensures that each individual component is of the highest quality and that it will not therefore cause a weak point in the enclosure. Evidence of this high quality and the functionality of the enclosure is provided by our own laboratory following intensive and careful testing to the international standards.

IP protection class testing

The most important function of an enclosure is to protect the internal components from external influences like moisture or dust.

Enclosures are therefore classified in terms of IP (Ingress Protection) protection classes. To certify this, the enclosures are tested in line with DIN EN 60529 in an accredited Weidmüller laboratory.

Further tests are carried out in our accredited laboratory:

- Impact resistance testing (IK number)
- Shock and vibration test
- Salt spray test (proof of corrosion resistance)
- Long-term testing in accordance with IECEx
  – Heat resistance
  – Cold resistance
- Computer tomography (CT)

Application specific solutions – your requirements are our motivation

Each branch has its own specific requirements and increasingly need individual solutions in addition to our standard product range. Many applications are subject to high levels of mechanical stress, for example due to vibrations or direct forces. Extreme temperature conditions or use in potentially explosive atmospheres are additional factors which the enclosure must be designed to cope with. Weidmüller provides competent and goal-oriented support to assist in the choice of the optimum product for every application.

Be it individual product development, customer specific assembly or ready-made application-specific products, Weidmüller helps to optimise work sequences with the perfect product solution. This ensures cost effectiveness for our customers not just today, but also enduring into the future.

Customer-specific assembly

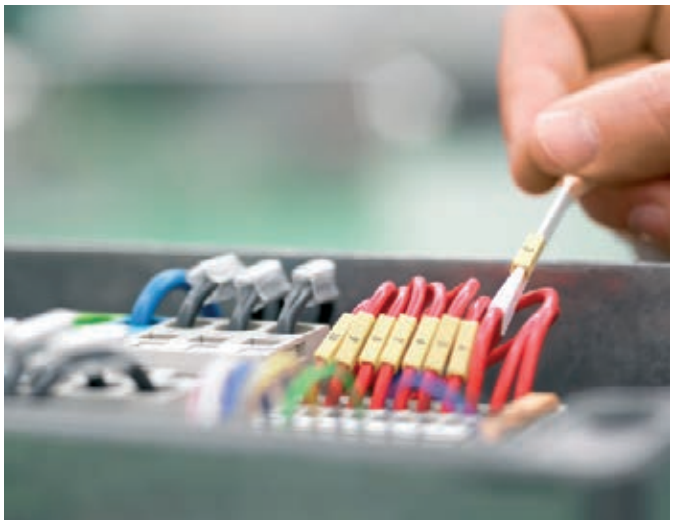

Product consulting, development and manufacture – all from a single source

Weidmüller is a reliable partner; we tailor-make individual enclosure solutions intelligently which meet the needs of our customers. Customer costs are reduced, efficiency increased and the customer can concentrate fully on their core business. Weidmüller has the application knowledge and the capacity to provide these tailor-made solutions quickly, flexibly and economically. Weidmüller forms a partnership with its customers, providing advice and always being on-hand to deal with any questions. When it comes to designing the task, we do so together. In the larger process, Weidmüller can choose from its wide product range to provide the ideal components to allow the appropriate solution to be set up.

Highest level manufacturing expertise

Weidmüller is globally known for its high quality enclosures. To guarantee these high quality standards only the highest quality materials were used for the production of the new Klippon® TB range. Their production was done using state of the art techniques.

High quality Klippon® TB enclosures are manufactured in nine steps:

- Fully automated laser cutting
- Computer-aided bending
- Process-safe welding
- Innovative welding of the female threaded sockets
- Surface treatment (electropolishing)
- Sealing gasket cutting
- Final assembly
- In-process quality controls
- Innovative packaging

More information online at:
www.klippontb.com

Enclosures

Enclosures	Introduction	B.2
	Klippon® TB MH - Multi Hinge - Steel enclosures	B.12
	Klippon® TB QL - Quarter Lock - Steel enclosures	B.38
	Klippon® TB FS - Fixing Screw - Steel enclosures	B.64
	Klippon® TBi QL - Quarter Lock - Steel enclosures	B.90
	Klippon® TBi FS - Fixing Screw - Steel enclosures	B.104
	Klippon® STB - Steel - enclosures	B.118
	Klippon® K - Aluminium enclosures	B.128
	Klippon® K - Distribution boxes Aluminium	B.150
	Klippon® POK - Polyester enclosures	B.164
	Klippon® POK - Distribution boxes Polyester	B.184
	TBF - Polyester enclosures	B.192
	MPC - Polycarbonate enclosures	B.200
	FPC - Polycarbonate enclosures	B.208

Metal enclosures

	Klippon® TB MH	Klippon® TB QL	Klippon® TB FS	Klippon® TBi QL
	Ex	Ex	Ex	
Material	Stainless steel	Stainless steel	Stainless steel	Stainless steel
Material Specification	Stainless steel 1.4404 (316L) 1.50 mm	Stainless steel 1.4404 (316L), enclosure 1.50 mm	Stainless steel 1.4404 (316L), enclosure 1.50 mm	Stainless steel 1.4301 (304), enclosure 1.50 mm
Sea water resistance	very good	very good	very good	very good
UV resistance	very good	very good	very good	very good
Halogen free / cadmium free	x / x	x / x	x / x	x / x
Surface finish	electropolished	electropolished	electropolished	electropolished
Intended use	Explosive hazard areas, offshore, oil and gas industry, chemical industry, process industry	Explosive hazard areas, offshore, oil and gas industry, chemical industry, process industry	Explosive hazard areas, offshore, oil and gas industry, chemical industry, process industry	Machine construction, transport, power
Dimensions				
L x W x H (min.) in mm	229x152x133	229x152x133	229x152x133	300x200x150
L x W x H (max) in mm	987x740x200	987x740x200	987x740x200	800x600x220
Geometry	3 standard depths	3 standard depths	3 standard depths	2 standard depths
Specific characteristics				
Gland plates	0,1,2,3,4	0,1,2,3,4	0,1,2,3,4	0,1
Type of gasket	Flat gasket	Flat gasket	Flat gasket	Flat gasket
Seal material	Silicone	Silicone	Silicone	Neoprene
Enclosure attachment	4 mounting feet with 11 mm hole size	4 mounting feet with 11 mm hole size	4 mounting feet with 11 mm hole size	Direct mounting (11 mm mounting holes on rear wall) or via mounting feet (optionally available)
Installation mounting	4 or 6 mounting bolts with M6 threaded holes	4 or 6 mounting bolts with M6 threaded holes	4 or 6 mounting bolts with M6 threaded holes	Welded mounting bracket
Temperature range	-60 °C...+135 °C	-60 °C...+135 °C	-60 °C...+135 °C	-40 °C...+85 °C
Impact resistance	10 J Industrial applications 7 J ATEX applications	10 J Industrial applications 7 J ATEX applications	10 J Industrial applications 7 J ATEX applications	10 J Industrial applications
IP - protection class	IP 66, IP 67 /	IP 66 /	IP 66, IP 67 /	IP 66 /
NEMA protection class	Nema 3, Nema 4x, Nema 12	Nema 3, Nema 4x, Nema 12	Nema 3, Nema 4x, Nema 12	Nema 3, Nema 4x, Nema 5
Flammability rating				
Surface resistance (in ohms)				
Approvals				
ATEX	x	x	x	
EN 60079-7 Increased safety	x	x	x	
EN 60079-11 Intrinsic safety	x	x	x	
EN 60079-31 Dust ignition protection	x	x	x	
IEC Ex	x	x	x	
IEC60079-7 Increased safety	x	x	x	
IEC60079-11 Intrinsic safety	x	x	x	
EN 60079-31 Dust ignition protection	x	x	x	
RMR / LR / GL	x / - / x	x / - / x	x / - / x	- / - / x
GOST Ex	x	x	x	
cULus	x	x	x	x
CCOE / INMETRO	x / *	- / *	x / *	
AEX	*	*	*	
Configuration				
	Lid hinges Removable lid Gland plates Welded mounting feet Fitting for a padlock	Lid hinges Gland plates Welded mounting feet Quarter lock	Removable lid Gland plates Welded mounting feet	Lid hinges Gland plates Direct mounting, Optional mounting feet Quarter lock

* Approvals are pending

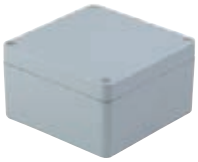

	Klippon® TBi FS	Klippon® STB		Klippon® K	
		Ex		Ex	
Material	Stainless steel	Stainless steel	Sheet steel	Aluminium	
Material Specification	Stainless steel 1.4301 (304), enclosure 1.50 mm	Stainless steel 1.4404 (316L) 1.50 mm	Powder-coated steel sheet 1.0330	High quality aluminium alloy (Al-Si12)	
Sea water resistance	very good	very good	good	good	
UV resistance	very good	very good	insufficient	very good	
Halogen free / cadmium free	x / x	x / x	x / x	x / x	
Surface finish	electropolished	electropolished, Mirror-polish	powder-coated	neutral, powder-coated	
Intended use	Machine construction, transport, power	Ex areas, packing industry, railways, shipping, process industry	Packing industry, railways, shipping, process industry	Ex-areas, process industry, transport, railways, shipping, port facilities, packaging, mechanical engineering	
Dimensions					
L x W x H (min.) in mm	300x200x150	120x120x80		50x45x30	
L x W x H (max) in mm	800x600x220	250x400x130		230x280x111	
Geometry	2 standard depths	5 standard depths		11 standard depths	
Specific characteristics		**Ex-version**	**Industrial version**	**Ex-version**	**Industrial version**
Gland plates	0,1	none	none	none	none
Type of gasket	Flat gasket	Flat gasket	Flat gasket	Shaped gasket	Shaped gasket
Seal material	Neoprene	Silicone	Silicone	Silicone	Chloroprene, Silicone
Enclosure attachment	Direct mounting (11 mm mounting holes on rear wall) or via mounting feet (optionally available)	External holders with 8 mm holes	External holders with 8 mm holes	4 holes for M4 to M6 screws	4 holes for M4 to M6 screws
Installation mounting	Welded mounting bracket	20 mm C-rail welded to the enclosure	20 mm C-rail welded to the enclosure	M4 to M6 threaded holes	M4 to M6 threaded holes
Temperature range	-40 °C...+85 °C	-60 °C...100 °C	-60 °C...120 °C	-50 °C...135 °C	-40 °C...+80 °C (CR); -50 °C...+135 °C (VMQ)
Impact resistance	10 J Industrial applications	7 J	10 J	7 J	10 J
IP - protection class NEMA protection class	IP 66 / Nema 3, Nema 4x, Nema 5	IP 66	IP 66	IP 66, IP 67 / Nema 4x	IP 66, IP 67, IP 68 / Nema 4x
Flammability rating					
Surface resistance (in ohms)					
Approvals					
ATEX		x		x	
EN 60079-7 Increased safety		x		x	
EN 60079-11 Intrinsic safety		x		x	
EN 60079-31 Dust ignition protection		x		x	
IEC Ex		x		x	
IEC60079-7 Increased safety		x		x	
IEC60079-11 Intrinsic safety		x		x	
EN 60079-31 Dust ignition protection		x		x	
RMR / LR / GL	- / - / x	- / x / x	- / x / -	x / - / x	x / - / x
GOST Ex		x		x	
cULus	x	x			x
CCOE / INMETRO		- / *			
AEX		*			
Configuration					
	Removable lid Gland plates Direct mounting, Optional mounting feet	TAS 20 C-profile rail Welded mounting feet Earth studs in enclosure lid and base		Internal earthing screw in the enclosure base an external earth stud	internal earthing screw in the enclosure base

* Approvals are pending

Plastic enclosures

	Klippon® POK		TBF	MPC	FPC
	Ex				
Material	Polyester		Polyester	Polycarbonate	Polycarbonate
Material Specification	Glass-fibre reinforced polyester in accordance with DIN 16913		Glass-fibre reinforced polyester, polycarbonate transparent cover		
Sea water resistance	very good		very good	very good	very good
UV resistance	good		good	good	good
Halogen free / cadmium free	x / x		x / x	x / x	x / x
Surface finish	Grey (industrial version), Black (Ex version)		grey	grey	grey
Intended use	Ex-areas, energy production, transportation, process industries, port facilities		Building installation, transportation, energy production, building sites, manufacturing industry, packaging industry	Building installation, transportation, energy production, building sites, manufacturing industry, packaging industry	Building installation, transportation, energy production, building sites, manufacturing industry, packaging industry
Dimensions					
L x W x H (min.) in mm	75x80x55		186x151x139	125x75x75	200x200x130
L x W x H (min.) in mm	250x400x160		603x603x175/210	250x175x150	600x400x130
Geometry	6 standard depths		3 standard depths	4 standard depths	1 standard depth
Specific characteristics	**Ex version (Black)**	**Industrial version (grey)**			
Gland plates	none	none	none	none	none
Type of gasket	Sealing	Sealing	O-ring	Foam seal	Foam seal
Seal material	Silicone	Chloroprene	Polyurethane	Polyurethane	Polyurethane
Enclosure attachment	4 holes for M4 to M6 screws	4 holes for M4 to M6 screws	4 holes or external mounting brackets (accessory)	4 holes or external mounting brackets (accessory)	4 holes or external mounting brackets (accessory)
Installation mounting	M4 to M6 threaded holes	M4 to M6 threaded holes	4 or 6 clamping screws M4	Self-tapping screws	Self-tapping screws
Temperature range	-55 °C...+100 °C	-40 °C...+100 °C	-50 °C...+150 °C (grey); -50 °C...+130 °C (transparent)	-50 °C...+130 °C	-50 °C...+130 °C
Impact resistance	7 J	7 J	4 J (grey lid) 7 J (transparent lid)	7J	7J
IP - protection class	IP 66	IP 66	IP 66 (transparent lid) IP 67 (grey lid)	IP 66, IP 67	IP 66, IP 67
Flammability rating	UL94 V0	UL94 V0	UL94 HB (grey), V2 (transparent)	V2	V2
Surface resistance (in ohms)	$<10^9$	10^{12}	10^{12}	10^{16}	10^{16}
Approvals					
ATEX	x				
EN 60079-7 Increased safety	x				
EN 60079-11 Intrinsic safety	x				
EN 60079-31 Dust ignition protection	x				
IEC Ex					
IEC60079-7 Increased safety					
IEC60079-11 Intrinsic safety					
EN 60079-31 Dust ignition protection					
RMR / LR / GL	x / – / –	x / x / –			
GOST Ex	x				
cULus		x			
CCOE / INMETRO					
AEX					
Configuration					
	Fastening screws for the mounting plate		grey or transparent lid	grey or transparent lid	grey or transparent lid

* Approvals are pending

Overview of dimensions

Klippon® TB MH – Multi Hinge / Klippon® TB QL – Quarter Lock / Klippon® TB FS – Fixing Screw

Page B.12

	Dimensions in mm Height x width x depth	Weight [g] 1 Gland plate	2 Gland plates	3 Gland plates	4 Gland plates
Klippon® TB MH	229 x 152 x 133	3060	3360	3740	4060
Klippon® TB QL		3060	3360	3740	4060
Klippon® TB FS		3754	2988	3429	3816
Klippon® TB MH	260 x 260 x 150	4840	5510	5780	6680
Klippon® TB QL		4840	5510	5780	6680
Klippon® TB FS		4320	4959	5148	6012
Klippon® TB MH	260 x 260 x 200	5620	6400	6840	8200
Klippon® TB QL		5620	6400	6840	8200
Klippon® TB FS		4950	5760	6570	7380
Klippon® TB MH	306 x 306 x 150	5960	6580	7060	7660
Klippon® TB QL		5960	6580	7060	7660
Klippon® TB FS		4860	5670	6300	6930
Klippon® TB MH	306 x 306 x 200	6800	7720	8320	9180
Klippon® TB QL		6800	7720	8320	9180
Klippon® TB FS		6120	6570	7470	8379
Klippon® TB MH	350 x 260 x 150	5780	6700	7600	9700
Klippon® TB QL		5780	6700	7600	9700
Klippon® TB FS		5400	6030	6840	8730
Klippon® TB MH	350 x 260 x 200	6700	7700	8380	10100
Klippon® TB QL		6700	7700	8380	10100
Klippon® TB FS		6030	6930	8010	9090
Klippon® TB MH	400 x 300 x 150	7200	8300	8380	11100
Klippon® TB QL		7200	8300	8380	11100
Klippon® TB FS		6480	7470	8730	9990
Klippon® TB MH	400 x 300 x 200	7900	9200	10400	11300
Klippon® TB QL		7900	9200	10400	11300
Klippon® TB FS		7290	8280	9360	10170
Klippon® TB MH	458 x 382 x 150	9000	9900	10700	12700
Klippon® TB QL		9000	9900	10700	12700
Klippon® TB FS		7650	8910	10170	11430
Klippon® TB MH	458 x 382 x 200	10240	10830	12500	14110
Klippon® TB QL		10240	10830	12500	14110
Klippon® TB FS		8460	9747	11250	12699
Klippon® TB MH	480 x 480 x 150	11900	13800	15200	17600
Klippon® TB QL		11900	13800	15200	17600
Klippon® TB FS		10710	12420	13680	15840
Klippon® TB MH	480 x 480 x 200	12420	15900	17700	16080
Klippon® TB QL		12420	15900	17700	16080
Klippon® TB FS		12600	14310	15930	17550
Klippon® TB MH	550 x 350 x 150	8500	9500	10800	12100
Klippon® TB QL		8500	9500	10800	12100
Klippon® TB FS		7650	8550	9720	10890
Klippon® TB MH	550 x 350 x 200	11060	11500	13800	14720
Klippon® TB QL		11060	11500	13800	14720
Klippon® TB FS		9090	10350	12150	13950
Klippon® TB MH	620 x 450 x 150	12800	14100	15600	17100
Klippon® TB QL		12800	14100	15600	17100
Klippon® TB FS		11520	12690	14040	15390
Klippon® TB MH	620 x 450 x 200	14240	15830	17360	20350
Klippon® TB QL		14240	15830	17360	20350
Klippon® TB FS		12654	14247	16281	18315
Klippon® TB MH	762 x 508 x 150	17100	18600	19700	20800
Klippon® TB QL		17100	18600	19700	20800
Klippon® TB FS		15390	16740	17730	18720
Klippon® TB MH	762 x 508 x 200	18120	19800	21200	22700
Klippon® TB QL		18120	19800	21200	22700
Klippon® TB FS		16020	17820	19080	20430

Note Additional enclosure sizes available on request. The weights given are net weights. Enclosures without gland plates are available on request.

Klippon® TB MH – Multi Hinge / Klippon® TB QL – Quarter Lock / Klippon® TB FS – Fixing Screw

Page B.12

	Dimensions in mm Height x width x depth	Weight [g]			
		1 Gland plate	2 Gland plates	3 Gland plates	4 Gland plates
Klippon® TB MH	914 x 610 x 150	20700	22200	24100	26000
Klippon® TB QL		20700	22200	24100	26000
Klippon® TB FS		18630	19980	21690	23400
Klippon® TB MH	914 x 610 x 200	23840	24600	26400	28200
Klippon® TB QL		23840	24600	26400	28200
Klippon® TB FS		19890	22140	23760	25380
Klippon® TB MH	980 x 740 x 200	34800	36300	36100	39900
Klippon® TB QL		34800	36300	36100	39900
Klippon® TB FS		31320	32670	34200	35910
Note	Additional enclosure sizes available on request. The weights given are net weights. Enclosures without gland plates are available on request.				

Klippon® TBi FS - Fixing Screw / Klippon® TBi QL - Quarter Lock

Page B.12

	Dimensions in mm Height x width x depth	Weight [g]	
		0 Gland plates	1 Gland plate
Klippon® TBi QL	300 x 200 x 150	3871.1	3432.1
Klippon® TBi FS		4454	5220
Klippon® TBi QL	300 x 300 x 150	4768.1	6700
Klippon® TBi FS		5719.6	5493.9
Klippon® TBi QL	300 x 300 x 220	5768.7	5320.7
Klippon® TBi FS		7451.8	7036.8
Klippon® TBi QL	400 x 300 x 150	5943.9	6503.9
Klippon® TBi FS		6980	6754.3
Klippon® TBi QL	400 x 300 x 220	7111.5	6655.5
Klippon® TBi FS		8927.1	8519.4
Klippon® TBi QL	400 x 400 x 220	8696.5	8072.5
Klippon® TBi FS		10653.6	10085.7
Klippon® TBi QL	500 x 400 x 220	10279.3	9647.3
Klippon® TBi FS		12482.9	11915.1
Klippon® TBi QL	500 x 500 x 220	12920.3	11264.3
Klippon® TBi FS		14571.8	13829.2
Klippon® TBi QL	600 x 400 x 220	11872.1	11240.1
Klippon® TBi FS		14239.5	13664.4
Klippon® TBi QL	600 x 600 x 220	15992.1	
Klippon® TBi FS		18842.4	17947
Klippon® TBi QL	800 x 600 x 200	20127.7	19143.7
Klippon® TBi FS		23349.7	22440
Note	Additional enclosure sizes available on request. The weights given are net weights. Enclosures without gland plates are available on request.		

Overview of dimensions

Klippon® STB

Page B.118

	Dimensions in mm Height x width x depth	Weight [g]
1.4404 (316L), mirror polished	**120 x 120 x 80**	1250
1.4404 (316L), electropolished		1220
MS RAL 7032		1277
1.4404 (316L), mirror polished	**150 x 120 x 80**	1451
1.4404 (316L), electropolished		1380
MS RAL 7032		1380
1.4404 (316L), mirror polished	**150 x 150 x 90**	1708
1.4404 (316L), electropolished		1734
MS RAL 7032		1765
1.4404 (316L), mirror polished	**190 x 150 x 90**	2006
1.4404 (316L), electropolished		2080
MS RAL 7032		2081
1.4404 (316L), mirror polished	**190 x 190 x 100**	2433
1.4404 (316L), electropolished		2407
MS RAL 7032		2468
1.4404 (316L), mirror polished	**250 x 250 x 120**	3912
1.4404 (316L), electropolished		3850
MS RAL 7032		4013
1.4404 (316L), mirror polished	**160 x 380 x 120**	3961
1.4404 (316L), electropolished		3960
MS RAL 7032		3974
1.4404 (316L), mirror polished	**250 x 400 x 130**	5714
1.4404 (316L), electropolished		5700
MS RAL 7032		5859

The weights given are net weights. MS: Mild steel, Stainless steel 1.4404 (316L).

Klippon® K

Page B.128

	Dimensions in mm Height x width x depth	Weight [g]
unpainted Ex (S)	**45 x 50 x 30**	89
unpainted (CR)		78.4
RAL 7001 (CR)		79.2
RAL 7001 (S)		83.6
unpainted Ex (S)	**64 x 58 x 34**	184
unpainted (CR)		148.1
RAL 7001 (CR)		153.6
RAL 7001 (S)		149.4
unpainted Ex (S)	**64 x 98 x 34**	254
unpainted (CR)		207
RAL 7001 (CR)		211.2
RAL 7001 (S)		217
unpainted Ex (S)	**70 x 70 x 45**	272
unpainted (CR)		247.5
RAL 7001 (CR)		251.5
RAL 7001 (S)		255.9
unpainted Ex (S)	**80 x 75 x 57**	328
unpainted (CR)		318
RAL 7001 (CR)		322
RAL 7001 (S)		319.6
unpainted Ex (S)	**70 x 100 x 45**	319
unpainted (CR)		314.4
RAL 7001 (CR)		309.9
RAL 7001 (S)		316

The weights given are net weights.

Klippon® K

Page B.128

	Dimensions in mm Height x width x depth	Weight [g]
unpainted Ex (S)	**80 x 125 x 57**	472
unpainted (CR)		446
RAL 7001 (CR)		466
RAL 7001 (S)		471
unpainted Ex (S)	**70 x 165 x 45**	500
unpainted (CR)		454.6
RAL 7001 (CR)		452
RAL 7001 (S)		469.2
unpainted Ex (S)	**80 x 175 x 57**	600
unpainted (CR)		569.6
RAL 7001 (CR)		576.6
RAL 7001 (S)		583.2
unpainted Ex (S)	**80 x 250 x 55**	874
unpainted (CR)		784
RAL 7001 (CR)		794
RAL 7001 (S)		752.8
unpainted Ex (S)	**82 x 130 x 72**	663
unpainted (CR)		633
RAL 7001 (CR)		644
RAL 7001 (S)		669
unpainted Ex (S)	**120 x 122 x 81**	986
unpainted (CR)		935
RAL 7001 (CR)		955
RAL 7001 (S)		938
unpainted Ex (S)	**130 x 170 x 90**	1432
unpainted (CR)		1386
RAL 7001 (CR)		1420
RAL 7001 (S)		1616
unpainted Ex (S)	**120 x 220 x 81**	1428
unpainted (CR)		1423
RAL 7001 (CR)		1399
RAL 7001 (S)		1411
unpainted Ex (S)	**160 x 160 x 91**	1699
unpainted (CR)		1676
RAL 7001 (CR)		1613
RAL 7001 (S)		1616
unpainted Ex (S)	**160 x 200 x 100**	1872
unpainted (CR)		1800
RAL 7001 (CR)		1820
RAL 7001 (S)		2080
unpainted Ex (S)	**160 x 260 x 91**	2249
unpainted (CR)		2160
RAL 7001 (CR)		2240
RAL 7001 (S)		2150
unpainted Ex (S)	**160 x 350 x 100**	2863
unpainted (CR)		2828
RAL 7001 (CR)		3116
RAL 7001 (S)		3094
unpainted Ex (S)	**230 x 280 x 111**	3420
unpainted (CR)		3377
RAL 7001 (CR)		3395
RAL 7001 (S)		3274

The weights given are net weights.

Klippon® POK

Page B.164

	Dimensions in mm Height x width x depth	Weight [g]
RAL 7001 RAL 9011	**75 x 80 x 56**	273 289
RAL 7001 RAL 9011	**75 x 110 x 55**	345 350
RAL 7001 RAL 9011	**75 x 160 x 55**	450 461
RAL 7001 RAL 9011	**75 x 190 x 55**	499 530
RAL 7001 RAL 9011	**75 x 230 x 55**	612 628
RAL 7001 RAL 9011	**120 x 122 x 91**	768 769
RAL 7001 RAL 9011	**120 x 220 x 91**	1094 1110
RAL 7001 RAL 9011	**160 x 160 x 91**	1302 1326
RAL 7001 RAL 9011	**160 x 260 x 91**	1771 1767
RAL 7001 RAL 9011	**160 x 360 x 91**	2210 2291
RAL 7001 RAL 9011	**160 x 560 x 91**	3327 3320
RAL 7001 RAL 9011	**250 x 255 x 121**	2817 2841
RAL 7001 RAL 9011	**250 x 400 x 121**	3693 3771
RAL 7001 RAL 9011	**250 x 600 x 121**	5420 5580
RAL 7001 RAL 9011	**405 x 400 x 121**	5740 5580
RAL 7001 RAL 9011	**250 x 255 x 161**	3458 3600
RAL 7001 RAL 9011	**250 x 400 x 161**	4390 4408

The weights given are net weights.

TBF

Page B.192

	Dimensions in mm Height x width x depth	Weight [g]
grey lid (RAL7035) transparent lid	**186 x 151 x 140**	1061 810
grey lid (RAL7035) transparent lid	**302 x 186 x 175**	1857 1520
grey lid (RAL7035) transparent lid	**302 x 302 x 175**	2420 2000
grey lid (RAL7035) transparent lid	**372 x 302 x 175**	2829 2465
grey lid (RAL7035) transparent lid	**488 x 302 x 175** **488 x 302 x 210**	3688 3220
grey lid (RAL7035) transparent lid	**558 x 302 x 175** **558 x 302 x 210**	4420 3660
grey lid (RAL7035) transparent lid	**603 x 302 x 175** **603 x 302 x 210**	4900 3900
grey lid (RAL7035) transparent lid	**603 x 372 x 175** **603 x 372 x 210**	5000 5000

The weights given are net weights.

Overview of dimensions

TBF

Page B.192

	Dimensions in mm Height x width x depth	Weight [g]
grey lid (RAL7035)	**603 x 605 x 175**	7220
transparent lid	**603 x 605 x 210**	7480

The weights given are net weights.

MPC

Page B.200

	Dimensions in mm Height x width x depth	Weight [g]
grey lid (RAL7035)	**125 x 75 x 75**	214
transparent lid		
grey lid (RAL7035)	**125 x 75 x 125**	306
transparent lid		304
grey lid (RAL7035)	**125 x 125 x 75**	295
transparent lid		294
grey lid (RAL7035)	**175 x 125 x 75**	373
transparent lid		368
grey lid (RAL7035)	**175 x 125 x 100**	464
transparent lid		448
grey lid (RAL7035)	**175 x 125 x 125**	523
transparent lid		525
grey lid (RAL7035)	**175 x 175 x 75**	489
transparent lid		491
grey lid (RAL7035)	**175 x 175 x 150**	184
transparent lid		731
grey lid (RAL7035)	**250 x 175 x 100**	760
transparent lid		753

FPC

Page B.208

	Dimensions in mm Height x width x depth	Weight [g]
grey lid (RAL7035)	**200 x 200 x 132**	1230
transparent lid		1260
grey lid (RAL7035)	**200 x 300 x 132**	1616
transparent lid		1589
grey lid (RAL7035)	**200 x 400 x 132**	2000
transparent lid		1984
grey lid (RAL7035)	**300 x 300 x 132**	2097
transparent lid		2103
grey lid (RAL7035)	**300 x 400 x 132**	2624
transparent lid		2620
grey lid (RAL7035)	**400 x 600 x 132**	3964
transparent lid		4500

The weights given are net weights.

Drawing design – For chapter B

The drawings contained in chapter B are constructed in the following way.

To identify the enclosure side views, these are marked with the letters A, B, C, D, E, and F. The schematic 3D representations shown underneath are of an enclosure that has been wall mounted.

F shows the view of the enclosure lid (front aspect),
E shows the interior surface of the enclosure (rear wall of the enclosure with the cover removed).
A shows the view of the enclosure from above and
B the view of the enclosure from underneath.
C shows the left and
D the right side of the enclosure.
E is the front view of the enclosure interior with the cover removed (enclosure rear wall).

You can find the dimensions of the enclosure sides for all enclosure sizes in each drawing.

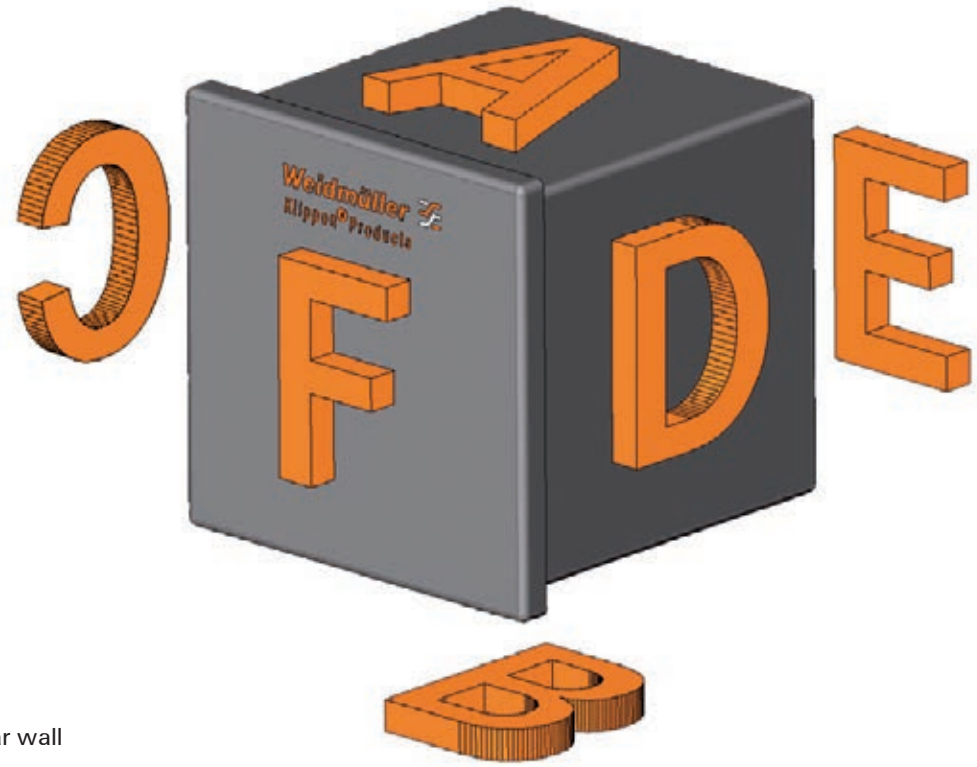

A = Top
B = Bottom
C = Left
D = Right
E = Enclosure rear wall
F = Enclosure lid

Klippon® TB MH - Multi Hinge

Steel enclosures
for use in industrial and in potentially explosive atmospheres

The Klippon® TB enclosure range features excellent performance characteristics, even under the most difficult environmental conditions, and also comply with the stricter requirements of potentially explosive atmospheres found in the process or power generation industries. The Klippon® TB MH enclosure range offers further improvements to a product line that is already successfully leading the market.

Weidmüller can manufacture and supply this enclosure to match customer specifications and fitted with all necessary terminals and cable glands.

Overview of enclosures

Ordering data

Description	Length x width x depth in mm	1 Gland Plate (below)	2 Gland Plates (above + below)	3 Gland plates (below + sides)	4 Gland plates (all sides)	Reference product
KTB MH 221513 S4E_*	229 x 152 x 133	1194560000	1194570000	1194580000	1194590000	Klippon® TB10
KTB MH 262615 S4E_*	260 x 260 x 150	1194610000	1194620000	1194630000	1194640000	Klippon® TB10A
KTB MH 262620 S4E_*	260 x 260 x 200	1194660000	1194670000	1194680000	1194690000	Klippon® TB10A
KTB MH 303015 S4E_*	306 x 306 x 150	1194710000	1194720000	1194730000	1194740000	Klippon® TB11
KTB MH 303020 S4E_*	306 x 306 x 200	1194760000	1194770000	1194780000	1194790000	Klippon® TB11
KTB MH 352615 S4E_*	350 x 260 x 150	1194810000	1194820000	1194830000	1194840000	Klippon® TB11A
KTB MH 352620 S4E_*	350 x 260 x 200	1194860000	1194870000	1194880000	1194890000	Klippon® TB11A
KTB MH 403015 S4E_*	400 x 300 x 150	1194910000	1194920000	1194930000	1194940000	-
KTB MH 403020 S4E_*	400 x 300 x 200	1194960000	1194970000	1194980000	1194990000	-
KTB MH 453815 S4E_*	458 x 382 x 150	1195010000	1195020000	1195030000	1195040000	Klippon® TB12
KTB MH 453820 S4E_*	458 x 382 x 200	1195060000	1195070000	1195080000	1195090000	Klippon® TB12
KTB MH 484815 S4E_*	480 x 480 x 150	1195110000	1195120000	1195130000	1195140000	Klippon® TB12A
KTB MH 484820 S4E_*	480 x 480 x 200	1195160000	1195170000	1195180000	1195190000	Klippon® TB12A
KTB MH 553515 S4E_*	550 x 350 x 150	1195210000	1195220000	1195230000	1195240000	Klippon® TB12B
KTB MH 553520 S4E_*	550 x 350 x 200	1195260000	1195270000	1195280000	1195290000	Klippon® TB12B
KTB MH 624515 S4E_*	620 x 450 x 150	1195310000	1195320000	1195330000	1195340000	Klippon® TB12D
KTB MH 624520 S4E_*	620 x 450 x 200	1195360000	1195370000	1195380000	1195390000	Klippon® TB12D
KTB MH 765015 S4E_*	762 x 508 x 150	1195410000	1195420000	1195430000	1195440000	Klippon® TB13
KTB MH 765020 S4E_*	762 x 508 x 200	1195460000	1195470000	1195480000	1195490000	Klippon® TB13
KTB MH 916115 S4E_*	914 x 610 x 150	1195510000	1195520000	1195530000	1195540000	Klippon® TB14
KTB MH 916120 S4E_*	914 x 610 x 200	1195560000	1195570000	1195580000	1195590000	Klippon® TB14
KTB MH 987420 S4E_*	980 x 740 x 200	1195610000	1195620000	1195630000	1195640000	-
Note		* Placeholder for the number of gland plates (1, 2, 3, 4). Klippon® TB MH enclosures are available without gland plates on request.				

Technical Overview

Features

- Available in 12 sizes and 3 standard depths
- Equipped with up to 4 gland plates
- The gasket is protected against compression
- Completely removable padlock tab
- Cover lock outside the sealed zone
- Improved temperature performance
- IP 66/IP 67 protection
- Lid can be removed without a tool
- Earth studs in enclosure cover and bottom section
- Welded mounting feet
- International approvals

Note

Technical data

Enclosure material***	Stainless steel 1.4404 (316L) 1.5 mm
Surface finish	electropolished
IP protection class	IP 66 / IP 67 (IP 66 to IEC EN 60079-0)
NEMA protection classes	3, 4x, 12
Gland plates	1 - 4 (fixed with M6 hexagon head screws with 10 mm heads), optionally without a gland plate
Gland plate thickness	3 mm (other thickness of up to 20 mm are available on request)
Earthing inside	Enclosure base and lid: welded M6 stainless steel earth studs
Earthing outside	Continuous M10 brass earth stud (optionally with stainless-steel earth stud)
Installation mounting	4 or 9 mounting bolts with M6 threaded holes to attach the mounting plate or mounting rail
Enclosure attachment	4 welded mounting feet with 11-mm holes (2 slotted and 2 cross-shaped openings)
Lid opening	Lid can be fully removed without the use of tools, can be fitted on both sides, lid opening angle: 130°
Cover attachment	4 hinges and M6 hex-head screws(AF 10) with slot
Equipped for a padlock	Removable padlock fitting, for additional product security with an optional padlock (article number: 0905680000)
Impact resistance	7 J ATEX applications, 10 J industrial applications
Gasket material	Silicone
Operating temperature range*	-60 °C...+135 °C
Torque - lid and gland plate screws**	2.5 Nm
Note	*Limited to IP 66 protection when used in temperatures greater than 105°C. ** To secure the lid, please use our hexagonal socket wrench with a 10 mm socket (9009070000) *** Painted steel enclosures are available on request.

Approvals for empty enclosures

ATEX certificate	KEMA 10ATEX0046 U
ATEX marking	II 2 G Ex e IIC Gb II 2 D Ex tb IIIC Db IP 66/67
IECEx certificate	IECEx KEM 10.0015U
IECEx marking	Ex e IIC Gb Ex tb IIIC Db IP 66/67
GOST Ex	POCC DE.ME92.B02036
cULus	E243298
Germanischer Lloyd	11533 - 10 HH
Russian Maritime Register	10.04093.250
CCOE	P267536/2
INMETRO	In preparation
Note	The Klippon® TB MH enclosure range can be pre-fitted in our customer specific production department according to your wishes; as an example, terminals, or other approved components, can be installed as required.

Approvals for control and distribution box

ATEX certificate	KEMA 10ATEX0050
ATEX marking	II 2 G Ex eb IIC T6...T4 II 1 G Ex ia IIC T6...T4 II 2(1) G Ex eb ia IIC T6...T4 II 2 D Ex tb IIIC T85 °C...T135 °C IP 66/67
IECEx certificate	IECEx KEM 10.0019
IECEx marking	Ex eb IIC T... Ex ia IIC T... Ex eb ia IIC T... Ex tb IIIC T85 °C...T135 °C IP 66/67
Note	Labelling depends on the application layout. Limited to IP 66 protection when used in temperatures greater than 105 °C.

Integrate, expand and customise: the perfect supplement to every application

The fully structured range of system accessories for the Klippon® TB enclosure range allows you to easily adapt the enclosure to meet the specific requirements of every application.

The following options are available:

1 Document holder

Document holders for storage of important documents in the enclosure.

2 Earthing studs

Earthing studs are replaceable. Available in two versions – brass and stainless steel.

3 Gland plates

Gland plates are available as spares and also in various material thicknesses.

4 Mounting plates

Mounting plates with and without a drilling pattern, for horizontal and vertical mounting of rails, or components fitted directly.

5 Mounting hardware kits

Mounting hardware kits are available for quick and easy installation of label holders, mounting plates, gland plates, document holders and rain hoods.

6 Door stay

A door stay prevent the door from being closed unintentionally, regardless of the mounting position of the enclosure.
This item is **only** available Ex-works.

7 Locking systems

Various locking systems are available for the safe securing of the enclosure. There are padlocks for the Klippon® TB MH enclosures and a range of lock inserts for the Klippon® TB QL enclosures.

8 Type label holder

A range of label holders are available for product identification.

9 Rain hoods

The rain hood provides an ideal, additional level of protection for the enclosure. Particularly useful against heavy rainfall or extreme levels of direct sunlight.

Klippon® TB MH 221513

Depth 133 mm

Height/Width/Depth	229 / 152 / 133 mm

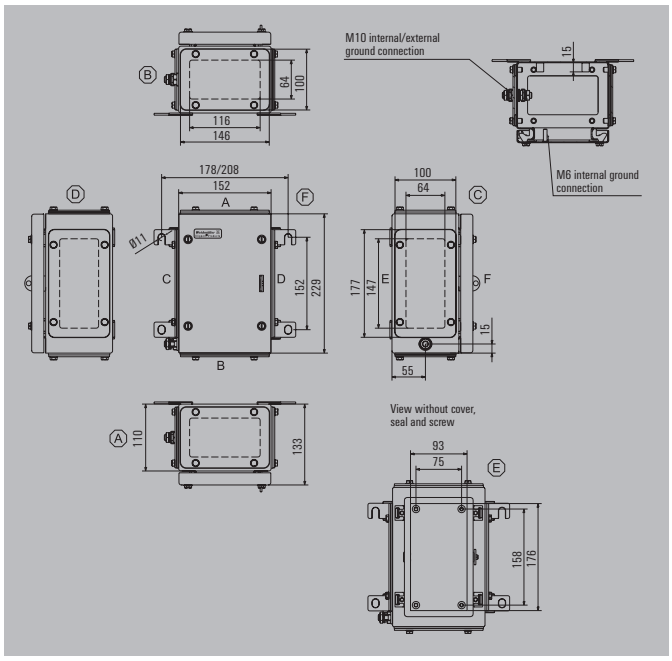

Ordering data

Stainless steel 1.4404 316L, electropolished	Order No.
1 gland plate - bottom side (B)	1194560000
2 gland plates - top and bottom sides (A & B)	1194570000
3 gland plates - bottom, left and right sides (B, C & D)	1194580000
4 gland plates - top, bottom, left and right sides (A, B, C & D)	1194590000
Note Painted sheet steel enclosure available on request. Standard colour is similar to RAL 7035.	

Accessories

Mounting plates and fastening screws	Order No.
Steel sheet, zinc plated	1193930000
Stainless steel 1.4301	1193810000
With hole pattern, natural stainless steel 1.4301	1257650000
Fastening screws for mounting plates	0642600000
Fastening screws for terminal rails	1274150000
Stainless steel spacer M6 x 8, Set of 4	
10 mm length	0935110000
15 mm length	0935120000
20 mm length	0935130000
30 mm length	0935140000
Gland plates and screws - 6 mm	
Top and bottom sides (A & B), electropolished stainless steel 1.4404	1256270000
Left and right sides (C & D), electropolished stainless steel 1.4404	1256280000
Mounting screw, stainless steel 1.4404	1253230000
Mirror-polish Stainless steel 1.4301 rain hood (2R)	
	1281360000
Label holder	
70 x 70 angled stainless steel 1.4301	1279320000
130x50 stainless steel 1.4301	1283450000
100x25 stainless steel 1.4301	1257640000
Document holder	
For DIN A6 size documents	
For DIN A5 size documents	
For DIN A4 size documents	
Set of fixings	
For label holders, rain hoods and document holders (rivet)	1252190000
For plastic (Trafolyte), identification plate (screw)	1285200000
Earthing stud	
Stainless steel 1.4404	1192690000
Padlock with two keys	
Stainless steel 1.4301	0905680000

Note

Max. number of terminals (industry)

Max. number of terminals (industry)	vertical	horizontal
2.5 mm²	1x29	1x15
4 mm²		1x13
6 mm²		1x9
10 mm²		1x7
16 mm²		1x6
35 mm²		

Note

*For enclosure versions with zero, one or two gland plates, the horizontal gap between the mounting feet is reduced by 30 mm.
Assembly with terminal blocks provides for 10 mm clearance to the ends of the mounting rail.
Recommended order:
TS 35 mounting rail (screw terminal) WDU 2.5 1020000000 / (tension clamp terminal) ZDU 2.5 1608510000 / (tension clamp terminal) PDU 2.5 1896110000
TS 32 mounting rail (screw terminal) SAK 2.5 0279660000
TS 15 mounting rail (screw terminal) AKZ 2.5 0697160000

Number of cable entries

Number of cable entries	A / B	C / D
M12	6	8
M16	5	6
M20	2	3
M25	2	2
M32	1	2
M40	1	2
M50	0	0
M63	0	0
M75	0	0

Note Our IP 68 brass cable glands serve as a reference for these recommended values.

Dimensions of mounting plate

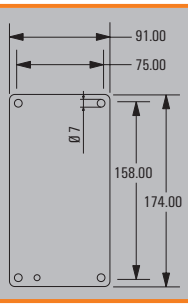

Klippon® TB MH 262615

Depth 150 mm

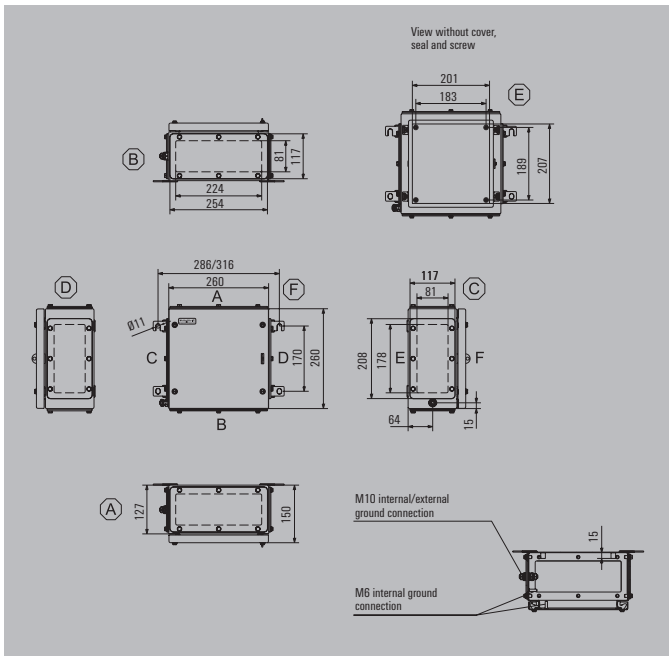

Height/Width/Depth	260 / 260 / 150 mm

Ordering data

Stainless steel 1.4404 316L, electropolished	Order No.
1 gland plate - bottom side (B)	1194610000
2 gland plates - top and bottom sides (A & B)	1194620000
3 gland plates - bottom, left and right sides (B, C & D)	1194630000
4 gland plates - top, bottom, left and right sides (A, B, C & D)	1194640000
Note	Painted sheet steel enclosure available on request. The colours of painted enclosures may vary under certain circumstances.

Accessories

Mounting plates and fastening screws	Order No.
Steel sheet, zinc plated	1193950000
Stainless steel 1.4301	1193820000
With hole pattern, natural stainless steel 1.4301	1257660000
Fastening screws for mounting plates	0642600000
Fastening screws for terminal rails	1274150000
Stainless steel spacer M6 x 8, Set of 4	
10 mm length	0935110000
15 mm length	0935120000
20 mm length	0935130000
30 mm length	0935140000
Gland plates and screws - 6 mm	
Top and bottom sides (A & B), electropolished stainless steel 1.4404	1256290000
Left and right sides (C & D), electropolished stainless steel 1.4404	1256310000
Mounting screw, stainless steel 1.4404	1253230000
Mirror-polish Stainless steel 1.4301 rain hood (2R)	
	1281370000
Label holder	
70 x 70 angled stainless steel 1.4301	1279320000
130x50 stainless steel 1.4301	1283450000
100x25 stainless steel 1.4301	1257640000
Document holder	
For DIN A6 size documents	1252780000
For DIN A5 size documents	
For DIN A4 size documents	
Set of fixings	
For label holders, rain hoods and document holders (rivet)	1252190000
For plastic (Trafolyte), identification plate (screw)	1285200000
Earthing stud	
Stainless steel 1.4404	1192690000
Padlock with two keys	
Stainless steel 1.4301	0905680000

Note

Max. number of terminals (industry)

Max. number of terminals (industry)	vertical	horizontal
2.5 mm²	2x35	2x34
4 mm²	1x30	1x29
6 mm²	1x22	1x22
10 mm²	1x18	1x17
16 mm²	1x15	1x14
35 mm²		

Note

*For enclosure versions with zero, one or two gland plates, the horizontal gap between the mounting feet is reduced by 30 mm.
Assembly with terminal blocks provides for 10 mm clearance to the ends of the mounting rail.
Recommended order:
TS 35 mounting rail (screw terminal) WDU 2.5 1020000000 / (tension clamp terminal) ZDU 2.5 1608510000 / (tension clamp terminal) PDU 2.5 1896110000
TS 32 mounting rail (screw terminal) SAK 2.5 0279660000
TS 15 mounting rail (screw terminal) AKZ 2.5 0697160000

Number of cable entries

Number of cable entries	A / B	C / D
M12	20	15
M16	11	8
M20	9	7
M25	4	3
M32	3	2
M40	3	2
M50	2	2
M63	0	0
M75	0	0

Note Our IP 68 brass cable glands are used as the reference for these guideline values.

Dimensions of mounting plate

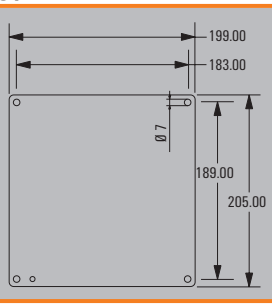

Klippon® TB MH 262620

Depth 200 mm

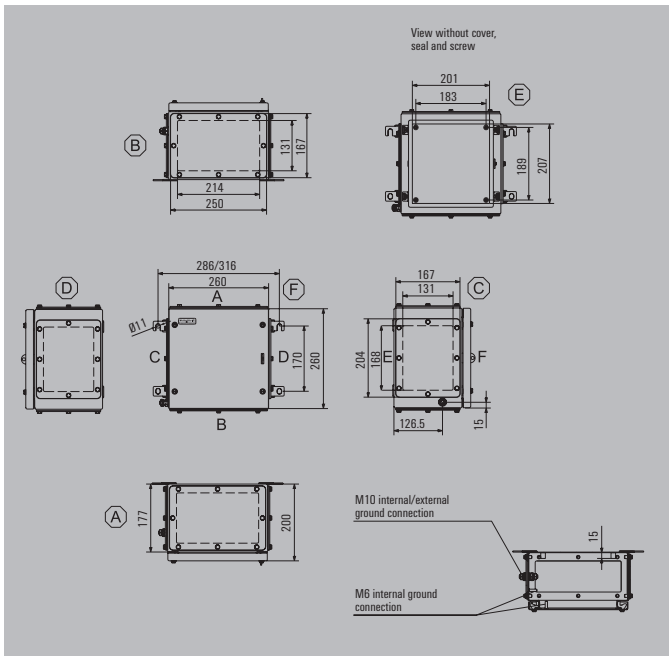

Height/Width/Depth	260 / 260 / 200 mm

Ordering data

Stainless steel 1.4404 316L, electropolished	Order No.
1 gland plate - bottom side (B)	1194660000
2 gland plates - top and bottom sides (A & B)	1194670000
3 gland plates - bottom, left and right sides (B, C & D)	1194680000
4 gland plates - top, bottom, left and right sides (A, B, C & D)	1194690000
Note	Painted sheet steel enclosure available on request. The colours of painted enclosures may vary under certain circumstances.

Accessories

Mounting plates and fastening screws	Order No.
Steel sheet, zinc plated	1193950000
Stainless steel 1.4301	1193820000
With hole pattern, natural stainless steel 1.4301	1257660000
Fastening screws for mounting plates	0642600000
Fastening screws for terminal rails	1274150000
Stainless steel spacer M6 x 8, Set of 4	
10 mm length	0935110000
15 mm length	0935120000
20 mm length	0935130000
30 mm length	0935140000
Gland plates and screws - 6 mm	
Top and bottom sides (A & B), electropolished stainless steel 1.4404	1256320000
Left and right sides (C & D), electropolished stainless steel 1.4404	1256330000
Mounting screw, stainless steel 1.4404	1253230000
Mirror-polish Stainless steel 1.4301 rain hood (2R)	
	1281380000
Label holder	
70 x 70 angled stainless steel 1.4301	1279320000
130x50 stainless steel 1.4301	1283450000
100x25 stainless steel 1.4301	1257640000
Document holder	
For DIN A6 size documents	1252780000
For DIN A5 size documents	
For DIN A4 size documents	
Set of fixings	
For label holders, rain hoods and document holders (rivet)	1252190000
For plastic (Trafolyte), identification plate (screw)	1285200000
Earthing stud	
Stainless steel 1.4404	1192690000
Padlock with two keys	
Stainless steel 1.4301	0905680000

Note

Max. number of terminals (industry)

Max. number of terminals (industry)	vertical	horizontal
2.5 mm²	2x35	2x34
4 mm²	1x30	1x29
6 mm²	1x22	1x22
10 mm²	1x18	1x17
16 mm²	1x15	1x14
35 mm²		

Note

*For enclosure versions with zero, one or two gland plates, the horizontal gap between the mounting feet is reduced by 30 mm.
Assembly with terminal blocks provides for 10 mm clearance to the ends of the mounting rail.
Recommended order:
TS 35 mounting rail (screw terminal) WDU 2.5 1020000000 / (tension clamp terminal) ZDU 2.5 1608510000 / (tension clamp terminal) PDU 2.5 1896110000
TS 32 mounting rail (screw terminal) SAK 2.5 0279660000
TS 15 mounting rail (screw terminal) AKZ 2.5 0697160000

Number of cable entries

Number of cable entries	A / B	C / D
M12	33	25
M16	22	16
M20	14	11
M25	12	9
M32	6	4
M40	5	4
M50	2	2
M63	2	1
M75	1	1

Note Our IP 68 brass cable glands serve as a reference for these recommended values.

Dimensions of mounting plate

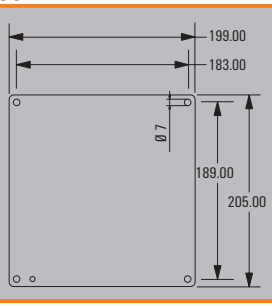

Klippon® TB MH 303015

Depth 150 mm

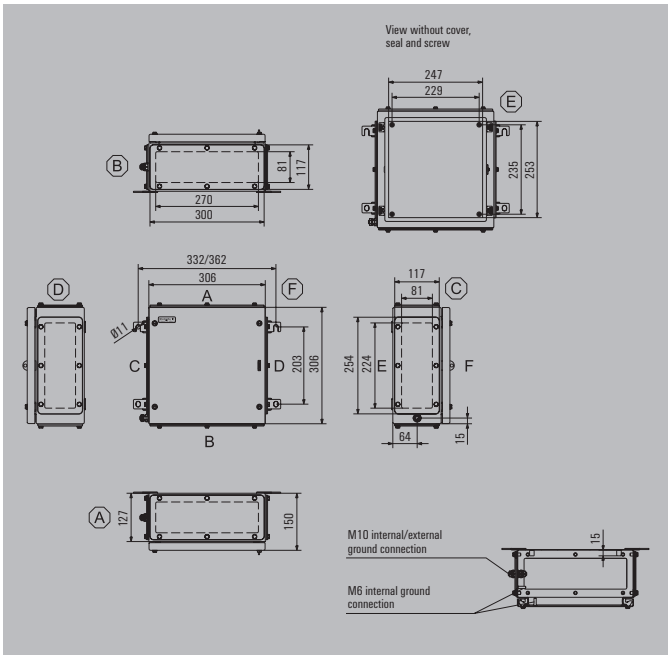

Height/Width/Depth	306 / 306 / 150 mm

Ordering data

Stainless steel 1.4404 316L, electropolished	Order No.
1 gland plate - bottom side (B)	1194710000
2 gland plates - top and bottom sides (A & B)	1194720000
3 gland plates - bottom, left and right sides (B, C & D)	1194730000
4 gland plates - top, bottom, left and right sides (A, B, C & D)	1194740000
Note	Painted sheet steel enclosure available on request. The colours of painted enclosures may vary under certain circumstances.

Accessories

Mounting plates and fastening screws	Order No.
Steel sheet, zinc plated	1193960000
Stainless steel 1.4301	1193830000
With hole pattern, natural stainless steel 1.4301	1257670000
Fastening screws for mounting plates	0642600000
Fastening screws for terminal rails	1274150000
Stainless steel spacer M6 x 8, Set of 4	
10 mm length	0935110000
15 mm length	0935120000
20 mm length	0935130000
30 mm length	0935140000
Gland plates and screws - 6 mm	
Top and bottom sides (A & B), electropolished stainless steel 1.4404	1256340000
Left and right sides (C & D), electropolished stainless steel 1.4404	1256350000
Mounting screw, stainless steel 1.4404	1253230000
Mirror-polish Stainless steel 1.4301 rain hood (2R)	
	1281390000
Label holder	
70 x 70 angled stainless steel 1.4301	1279320000
130x50 stainless steel 1.4301	1283450000
100x25 stainless steel 1.4301	1257640000
Document holder	
For DIN A6 size documents	1252780000
For DIN A5 size documents	
For DIN A4 size documents	
Set of fixings	
For label holders, rain hoods and document holders (rivet)	1252190000
For plastic (Trafolyte), identification plate (screw)	1285200000
Earthing stud	
Stainless steel 1.4404	1192690000
Padlock with two keys	
Stainless steel 1.4301	0905680000

Note

Max. number of terminals (industry)

Max. number of terminals (industry)	vertical	horizontal
2.5 mm²	2x44	2x43
4 mm²	2x37	2x36
6 mm²	2x28	2x27
10 mm²	1x22	1x22
16 mm²	1x19	1x18
35 mm²	1x14	1x13

Note

*For enclosure versions with zero, one or two gland plates, the horizontal gap between the mounting feet is reduced by 30 mm.
Assembly with terminal blocks provides for 10 mm clearance to the ends of the mounting rail.
Recommended order:
TS 35 mounting rail (screw terminal) WDU 2.5 1020000000 / (tension clamp terminal) ZDU 2.5 1608510000 / (tension clamp terminal) PDU 2.5 1896110000
TS 32 mounting rail (screw terminal) SAK 2.5 0279660000
TS 15 mounting rail (screw terminal) AKZ 2.5 0697160000

Number of cable entries

Number of cable entries	A / B	C / D
M12	24	20
M16	13	11
M20	11	9
M25	5	4
M32	4	3
M40	3	3
M50	3	2
M63	0	0
M75	0	0

Note Our IP 68 brass cable glands are used as the reference for these guideline values.

Dimensions of mounting plate

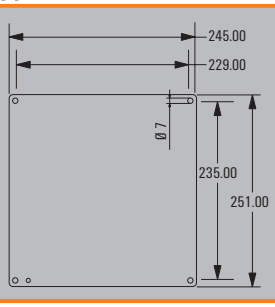

Klippon® TB MH 303020

Depth 200 mm

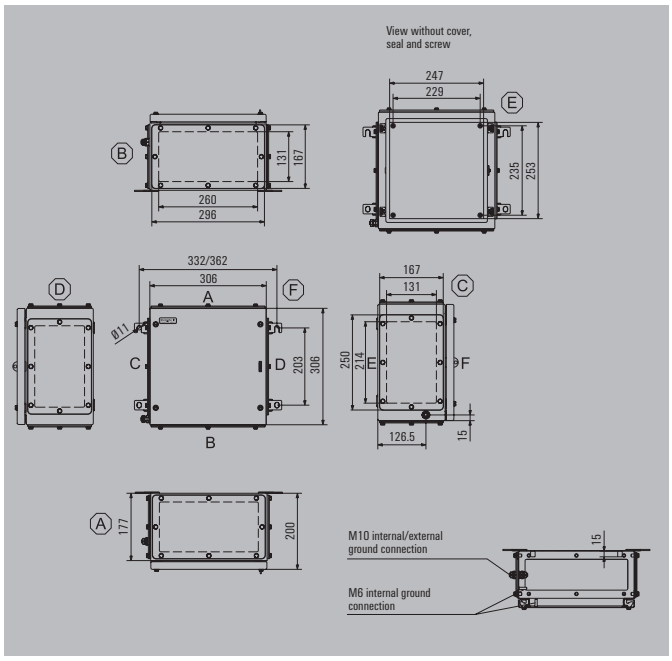

Height/Width/Depth	306 / 306 / 200 mm

Ordering data

Stainless steel 1.4404 316L, electropolished	Order No.
1 gland plate - bottom side (B)	1194760000
2 gland plates - top and bottom sides (A & B)	1194770000
3 gland plates - bottom, left and right sides (B, C & D)	1194780000
4 gland plates - top, bottom, left and right sides (A, B, C & D)	1194790000
Note	Painted sheet steel enclosure available on request. The colours of painted enclosures may vary under certain circumstances.

Accessories

Mounting plates and fastening screws	Order No.
Steel sheet, zinc plated	1193960000
Stainless steel 1.4301	1193830000
With hole pattern, natural stainless steel 1.4301	1257670000
Fastening screws for mounting plates	0642600000
Fastening screws for terminal rails	1274150000
Stainless steel spacer M6 x 8, Set of 4	
10 mm length	0935110000
15 mm length	0935120000
20 mm length	0935130000
30 mm length	0935140000
Gland plates and screws - 6 mm	
Top and bottom sides (A & B), electropolished stainless steel 1.4404	1256360000
Left and right sides (C & D), electropolished stainless steel 1.4404	1256370000
Mounting screw, stainless steel 1.4404	1253230000
Mirror-polish Stainless steel 1.4301 rain hood (2R)	
	1281400000
Label holder	
70 x 70 angled stainless steel 1.4301	1279320000
130x50 stainless steel 1.4301	1283450000
100x25 stainless steel 1.4301	1257640000
Document holder	
For DIN A6 size documents	1252780000
For DIN A5 size documents	
For DIN A4 size documents	
Set of fixings	
For label holders, rain hoods and document holders (rivet)	1252190000
For plastic (Trafolyte), identification plate (screw)	1285200000
Earthing stud	
Stainless steel 1.4404	1192690000
Padlock with two keys	
Stainless steel 1.4301	0905680000

Note

Max. number of terminals (industry)

Max. number of terminals (industry)	vertical	horizontal
2.5 mm²	2x44	2x43
4 mm²	2x37	2x36
6 mm²	2x28	2x27
10 mm²	1x22	1x22
16 mm²	1x19	1x18
35 mm²	1x14	1x13

Note

*For enclosure versions with zero, one or two gland plates, the horizontal gap between the mounting feet is reduced by 30 mm.
Assembly with terminal blocks provides for 10 mm clearance to the ends of the mounting rail.
Recommended order:
TS 35 mounting rail (screw terminal) WDU 2.5 1020000000 / (tension clamp terminal) ZDU 2.5 1608510000 / (tension clamp terminal) PDU 2.5 1896110000
TS 32 mounting rail (screw terminal) SAK 2.5 0279660000
TS 15 mounting rail (screw terminal) AKZ 2.5 0697160000

Number of cable entries

Number of cable entries	A / B	C / D
M12	40	33
M16	26	22
M20	17	14
M25	14	12
M32	8	6
M40	6	5
M50	3	2
M63	2	2
M75	2	1
Note	Our IP 68 brass cable glands serve as a reference for these recommended values.	

Dimensions of mounting plate

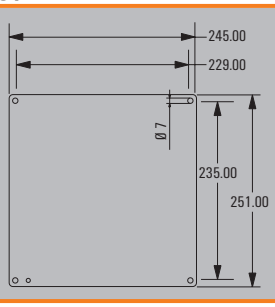

Klippon® TB MH 352615

Depth 150 mm

Height/Width/Depth	350 / 260 / 150 mm

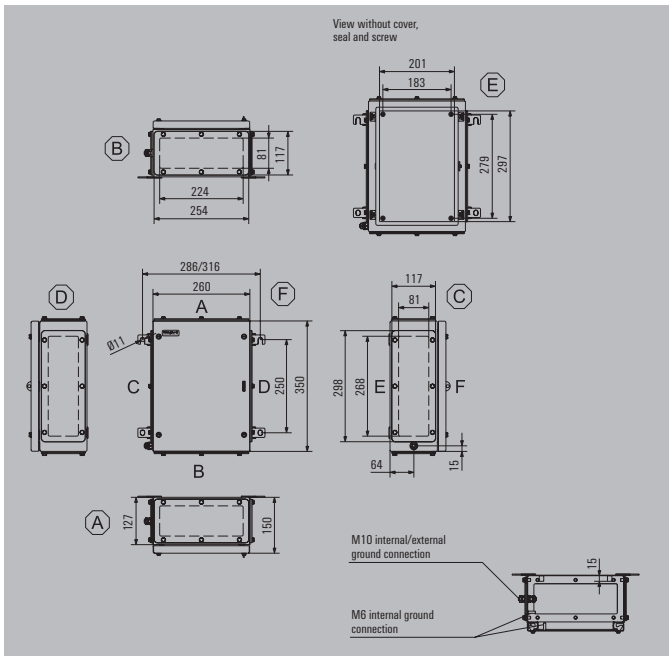

Ordering data

Stainless steel 1.4404 316L, electropolished	Order No.
1 gland plate - bottom side (B)	1194810000
2 gland plates - top and bottom sides (A & B)	1194820000
3 gland plates - bottom, left and right sides (B, C & D)	1194830000
4 gland plates - top, bottom, left and right sides (A, B, C & D)	1194840000
Note Painted sheet steel enclosure available on request. Standard colour is similar to RAL 7035.	

Max. number of terminals (industry)

Max. number of terminals (industry)	vertical	horizontal
2.5 mm²	2x53	2x34
4 mm²	1x44	2x29
6 mm²	1x33	2x22
10 mm²	1x27	2x17
16 mm²	1x22	1x14
35 mm²		1x11

Note *For enclosure versions with zero, one or two gland plates, the horizontal gap between the mounting feet is reduced by 30 mm.
Assembly with terminal blocks provides for 10 mm clearance to the ends of the mounting rail.
Recommended order:
TS 35 mounting rail (screw terminal) WDU 2.5 1020000000 / (tension clamp terminal) ZDU 2.5 1608510000 / (tension clamp terminal) PDU 2.5 1896110000
TS 32 mounting rail (screw terminal) SAK 2.5 0279660000
TS 15 mounting rail (screw terminal) AKZ 2.5 0697160000

Accessories

Mounting plates and fastening screws	Order No.
Steel sheet, zinc plated	1193970000
Stainless steel 1.4301	1193840000
With hole pattern, natural stainless steel 1.4301	1257680000
Fastening screws for mounting plates	0642600000
Fastening screws for terminal rails	1274150000
Stainless steel spacer M6 x 8, Set of 4	
10 mm length	0935110000
15 mm length	0935120000
20 mm length	0935130000
30 mm length	0935140000
Gland plates and screws - 6 mm	
Top and bottom sides (A & B), electropolished stainless steel 1.4404	1256380000
Left and right sides (C & D), electropolished stainless steel 1.4404	1256390000
Mounting screw, stainless steel 1.4404	1253230000
Mirror-polish Stainless steel 1.4301 rain hood (2R)	
	1281410000
Label holder	
70 x 70 angled stainless steel 1.4301	1279320000
130x50 stainless steel 1.4301	1283450000
100x25 stainless steel 1.4301	1257640000
Document holder	
For DIN A6 size documents	1252780000
For DIN A5 size documents	
For DIN A4 size documents	
Set of fixings	
For label holders, rain hoods and document holders (rivet)	1252190000
For plastic (Trafolyte), identification plate (screw)	1285200000
Earthing stud	
Stainless steel 1.4404	1192690000
Padlock with two keys	
Stainless steel 1.4301	0905680000

Note

Number of cable entries

Number of cable entries	A / B	C / D
M12	20	23
M16	11	13
M20	9	11
M25	4	5
M32	3	4
M40	3	3
M50	2	3
M63	0	0
M75	0	0

Note Our IP 68 brass cable glands are used as the reference for these guideline values.

Dimensions of mounting plate

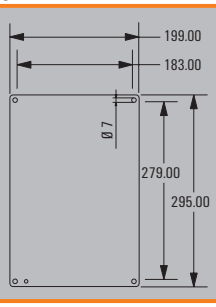

Klippon® TB MH 352620

Depth 200 mm

Height/Width/Depth	350 / 260 / 200 mm

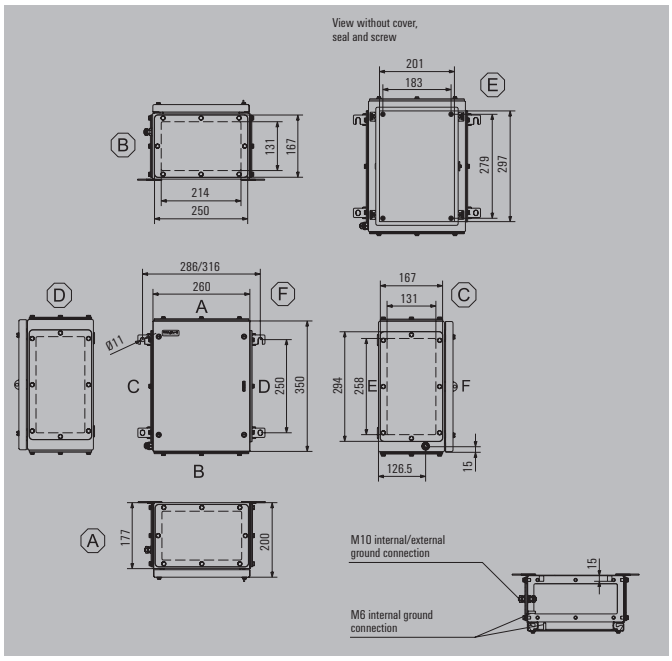

Ordering data

Stainless steel 1.4404 316L, electropolished	Order No.
1 gland plate - bottom side (B)	1194860000
2 gland plates - top and bottom sides (A & B)	1194870000
3 gland plates - bottom, left and right sides (B, C & D)	1194880000
4 gland plates - top, bottom, left and right sides (A, B, C & D)	1194890000
Note	Painted sheet steel enclosure available on request. Standard colour is similar to RAL 7035.

Accessories

Mounting plates and fastening screws	Order No.
Steel sheet, zinc plated	1193970000
Stainless steel 1.4301	1193840000
With hole pattern, natural stainless steel 1.4301	1257680000
Fastening screws for mounting plates	0642600000
Fastening screws for terminal rails	1274150000
Stainless steel spacer M6 x 8, Set of 4	
10 mm length	0935110000
15 mm length	0935120000
20 mm length	0935130000
30 mm length	0935140000
Gland plates and screws - 6 mm	
Top and bottom sides (A & B), electropolished stainless steel 1.4404	1256410000
Left and right sides (C & D), electropolished stainless steel 1.4404	1256420000
Mounting screw, stainless steel 1.4404	1253230000
Mirror-polish Stainless steel 1.4301 rain hood (2R)	
	1281420000
Label holder	
70 x 70 angled stainless steel 1.4301	1279320000
130x50 stainless steel 1.4301	1283450000
100x25 stainless steel 1.4301	1257640000
Document holder	
For DIN A6 size documents	1252780000
For DIN A5 size documents	
For DIN A4 size documents	
Set of fixings	
For label holders, rain hoods and document holders (rivet)	1252190000
For plastic (Trafolyte), identification plate (screw)	1285200000
Earthing stud	
Stainless steel 1.4404	1192690000
Padlock with two keys	
Stainless steel 1.4301	0905680000

Note

Max. number of terminals (industry)

Max. number of terminals (industry)	vertical	horizontal
2.5 mm²	2x53	2x34
4 mm²	1x44	2x29
6 mm²	1x33	2x22
10 mm²	1x27	2x17
16 mm²	1x22	1x14
35 mm²		1x11

Note

*For enclosure versions with zero, one or two gland plates, the horizontal gap between the mounting feet is reduced by 30 mm.
Assembly with terminal blocks provides for 10 mm clearance to the ends of the mounting rail.
Recommended order:
TS 35 mounting rail (screw terminal) WDU 2.5 1020000000 / (tension clamp terminal) ZDU 2.5 1608510000 / (tension clamp terminal) PDU 2.5 1896110000
TS 32 mounting rail (screw terminal) SAK 2.5 0279660000
TS 15 mounting rail (screw terminal) AKZ 2.5 0697160000

Number of cable entries

Number of cable entries	A / B	C / D
M12	33	38
M16	22	26
M20	14	17
M25	12	14
M32	6	7
M40	5	6
M50	2	3
M63	2	2
M75	1	2

Note Our IP 68 brass cable glands serve as a reference for these recommended values.

Dimensions of mounting plate

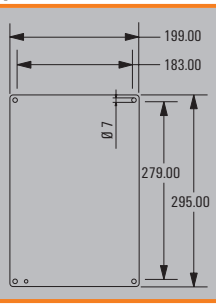

Klippon® TB MH 403015

Depth 150 mm

Height/Width/Depth	400 / 300 / 150 mm

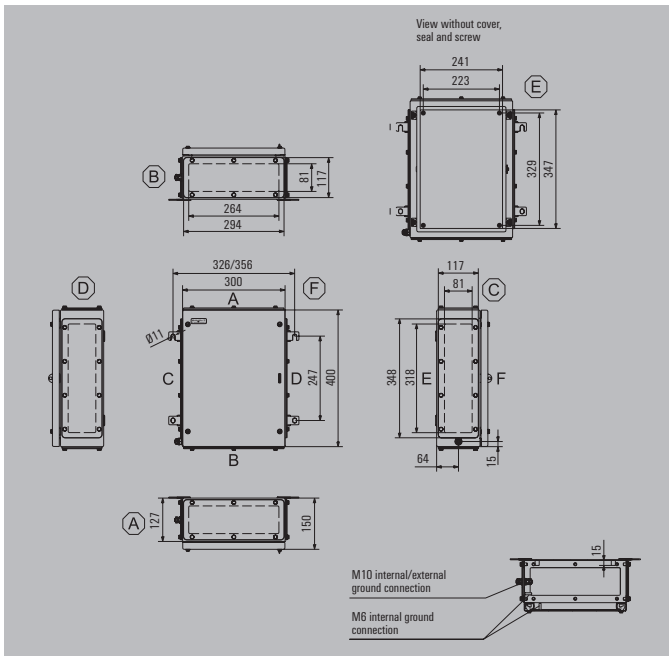

Ordering data

Stainless steel 1.4404 316L, electropolished	Order No.
1 gland plate - bottom side (B)	1194910000
2 gland plates - top and bottom sides (A & B)	1194920000
3 gland plates - bottom, left and right sides (B, C & D)	1194930000
4 gland plates - top, bottom, left and right sides (A, B, C & D)	1194940000
Note	Painted sheet steel enclosure available on request. Standard colour is similar to RAL 7035.

Max. number of terminals (industry)

Max. number of terminals (industry)	vertical	horizontal
2.5 mm²	2x62	3x42
4 mm²	2x52	3x35
6 mm²	1x39	2x26
10 mm²	1x32	2x21
16 mm²	1x26	2x18
35 mm²	1x20	1x13

Note

*For enclosure versions with zero, one or two gland plates, the horizontal gap between the mounting feet is reduced by 30 mm.
Assembly with terminal blocks provides for 10 mm clearance to the ends of the mounting rail.
Recommended order:
TS 35 mounting rail (screw terminal) WDU 2.5 1020000000 / (tension clamp terminal) ZDU 2.5 1608510000 / (tension clamp terminal) PDU 2.5 1896110000
TS 32 mounting rail (screw terminal) SAK 2.5 0279660000
TS 15 mounting rail (screw terminal) AKZ 2.5 0697160000

Accessories

Mounting plates and fastening screws	Order No.
Steel sheet, zinc plated	1193980000
Stainless steel 1.4301	1193850000
With hole pattern, natural stainless steel 1.4301	1257690000
Fastening screws for mounting plates	0642600000
Fastening screws for terminal rails	1274150000
Stainless steel spacer M6 x 8, Set of 4	
10 mm length	0935110000
15 mm length	0935120000
20 mm length	0935130000
30 mm length	0935140000
Gland plates and screws - 6 mm	
Top and bottom sides (A & B), electropolished stainless steel 1.4404	1256430000
Left and right sides (C & D), electropolished stainless steel 1.4404	1256440000
Mounting screw, stainless steel 1.4404	1253230000
Mirror-polish Stainless steel 1.4301 rain hood (2R)	
	1281430000
Label holder	
70 x 70 angled stainless steel 1.4301	1279320000
130x50 stainless steel 1.4301	1283450000
100x25 stainless steel 1.4301	1257640000
Document holder	
For DIN A6 size documents	1252780000
For DIN A5 size documents	
For DIN A4 size documents	
Set of fixings	
For label holders, rain hoods and document holders (rivet)	1252190000
For plastic (Trafolyte), identification plate (screw)	1285200000
Earthing stud	
Stainless steel 1.4404	1192690000
Padlock with two keys	
Stainless steel 1.4301	0905680000

Note

Number of cable entries

Number of cable entries	A / B	C / D
M12	23	29
M16	13	16
M20	11	13
M25	5	6
M32	4	5
M40	3	4
M50	3	3
M63	0	0
M75	0	0
Note	Our IP 68 brass cable glands are used as the reference for these guideline values.	

Dimensions of mounting plate

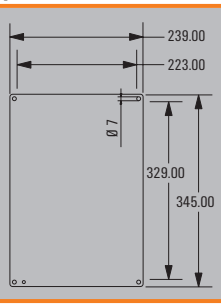

Klippon® TB MH 403020

Depth 200 mm

Height/Width/Depth	400 / 300 / 200 mm

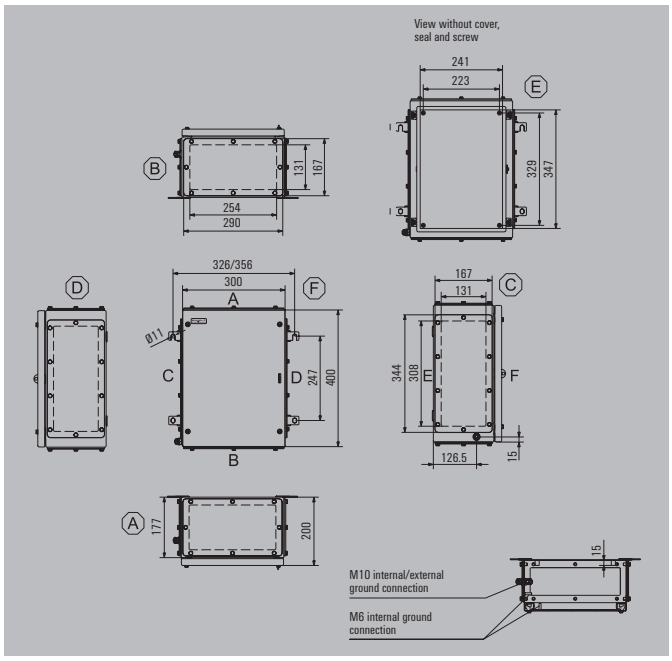

Ordering data

Stainless steel 1.4404 316L, electropolished	Order No.
1 gland plate - bottom side (B)	1194960000
2 gland plates - top and bottom sides (A & B)	1194970000
3 gland plates - bottom, left and right sides (B, C & D)	1194980000
4 gland plates - top, bottom, left and right sides (A, B, C & D)	1194990000
Note	Painted sheet steel enclosure available on request. Standard colour is similar to RAL 7035.

Accessories

Mounting plates and fastening screws	Order No.
Steel sheet, zinc plated	1193980000
Stainless steel 1.4301	1193850000
With hole pattern, natural stainless steel 1.4301	1257690000
Fastening screws for mounting plates	0642600000
Fastening screws for terminal rails	1274150000
Stainless steel spacer M6 x 8, Set of 4	
10 mm length	0935110000
15 mm length	0935120000
20 mm length	0935130000
30 mm length	0935140000
Gland plates and screws - 6 mm	
Top and bottom sides (A & B), electropolished stainless steel 1.4404	1256450000
Left and right sides (C & D), electropolished stainless steel 1.4404	1256470000
Mounting screw, stainless steel 1.4404	1253230000
Mirror-polish Stainless steel 1.4301 rain hood (2R)	
	1281440000
Label holder	
70 x 70 angled stainless steel 1.4301	1279320000
130x50 stainless steel 1.4301	1283450000
100x25 stainless steel 1.4301	1257640000
Document holder	
For DIN A6 size documents	1252780000
For DIN A5 size documents	
For DIN A4 size documents	
Set of fixings	
For label holders, rain hoods and document holders (rivet)	1252190000
For plastic (Trafolyte), identification plate (screw)	1285200000
Earthing stud	
Stainless steel 1.4404	1192690000
Padlock with two keys	
Stainless steel 1.4301	0905680000

Note

Max. number of terminals (industry)

Max. number of terminals (industry)	vertical	horizontal
2.5 mm²	2x62	3x42
4 mm²	2x52	3x35
6 mm²	1x39	2x26
10 mm²	1x32	2x21
16 mm²	1x26	2x18
35 mm²	1x20	1x13

Note

*For enclosure versions with zero, one or two gland plates, the horizontal gap between the mounting feet is reduced by 30 mm.
Assembly with terminal blocks provides for 10 mm clearance to the ends of the mounting rail.
Recommended order:
TS 35 mounting rail (screw terminal) WDU 2.5 1020000000 / (tension clamp terminal) ZDU 2.5 1608510000 / (tension clamp terminal) PDU 2.5 1896110000
TS 32 mounting rail (screw terminal) SAK 2.5 0279660000
TS 15 mounting rail (screw terminal) AKZ 2.5 0697160000

Number of cable entries

Number of cable entries	A / B	C / D
M12	38	48
M16	26	32
M20	17	20
M25	14	17
M32	7	9
M40	6	7
M50	3	3
M63	2	3
M75	2	2

Note Our IP 68 brass cable glands serve as a reference for these recommended values.

Dimensions of mounting plate

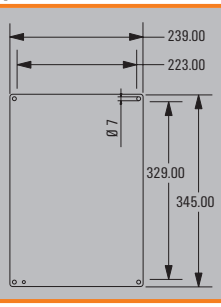

Klippon® TB MH 453815

Depth 150 mm

Height/Width/Depth	458 / 382 / 150 mm

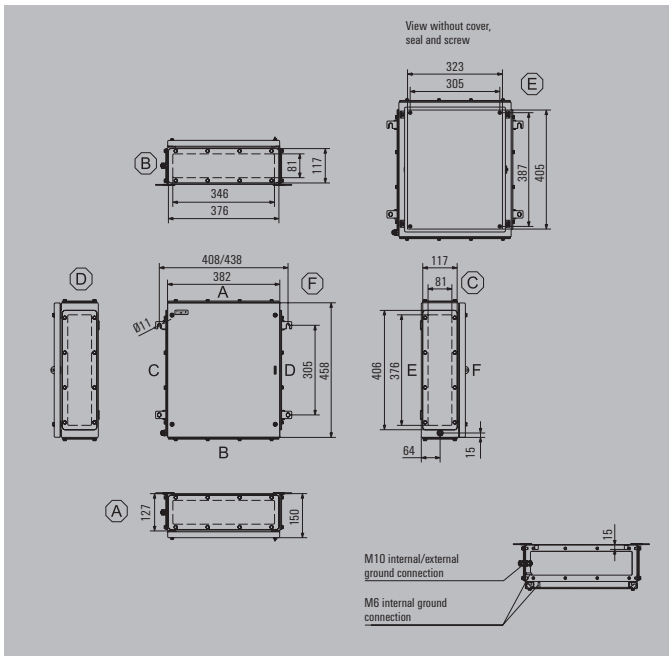

Ordering data

Stainless steel 1.4404 316L, electropolished	Order No.
1 gland plate - bottom side (B)	1195010000
2 gland plates - top and bottom sides (A & B)	1195020000
3 gland plates - bottom, left and right sides (B, C & D)	1195030000
4 gland plates - top, bottom, left and right sides (A, B, C & D)	1195040000
Note	Painted sheet steel enclosure available on request. Standard colour is similar to RAL 7035.

Accessories

Mounting plates and fastening screws	Order No.
Steel sheet, zinc plated	1193990000
Stainless steel 1.4301	1193860000
With hole pattern, natural stainless steel 1.4301	1257700000
Fastening screws for mounting plates	0642600000
Fastening screws for terminal rails	1274150000
Stainless steel spacer M6 x 8, Set of 4	
10 mm length	0935110000
15 mm length	0935120000
20 mm length	0935130000
30 mm length	0935140000
Gland plates and screws - 6 mm	
Top and bottom sides (A & B), electropolished stainless steel 1.4404	1256480000
Left and right sides (C & D), electropolished stainless steel 1.4404	1256490000
Mounting screw, stainless steel 1.4404	1253230000
Mirror-polish Stainless steel 1.4301 rain hood (2R)	
	1281450000
Label holder	
70 x 70 angled stainless steel 1.4301	1279320000
130x50 stainless steel 1.4301	1283450000
100x25 stainless steel 1.4301	1257640000
Document holder	
For DIN A6 size documents	1252780000
For DIN A5 size documents	1252750000
For DIN A4 size documents	
Set of fixings	
For label holders, rain hoods and document holders (rivet)	1252190000
For plastic (Trafolyte), identification plate (screw)	1285200000
Earthing stud	
Stainless steel 1.4404	1192690000
Padlock with two keys	
Stainless steel 1.4301	0905680000

Note

Max. number of terminals (industry)

Max. number of terminals (industry)	vertical	horizontal
2.5 mm²	3x73	4x58
4 mm²	2x62	3x48
6 mm²	2x46	3x36
10 mm²	2x37	2x29
16 mm²	2x31	2x24
35 mm²	1x23	1x18

Note

*For enclosure versions with zero, one or two gland plates, the horizontal gap between the mounting feet is reduced by 30 mm.
Assembly with terminal blocks provides for 10 mm clearance to the ends of the mounting rail.
Recommended order:
TS 35 mounting rail (screw terminal) WDU 2.5 1020000000 / (tension clamp terminal) ZDU 2.5 1608510000 / (tension clamp terminal) PDU 2.5 1896110000
TS 32 mounting rail (screw terminal) SAK 2.5 0279660000
TS 15 mounting rail (screw terminal) AKZ 2.5 0697160000

Number of cable entries

Number of cable entries	A / B	C / D
M12	30	33
M16	17	19
M20	15	16
M25	6	7
M32	5	6
M40	4	5
M50	4	4
M63	0	0
M75	0	0

Note Our IP 68 brass cable glands serve as a reference for these recommended values.

Dimensions of mounting plate

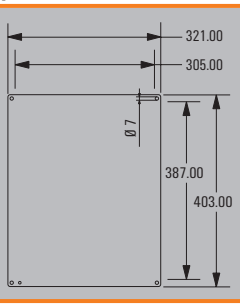

Klippon® TB MH 453820

Depth 200 mm

Height/Width/Depth	458 / 382 / 200 mm

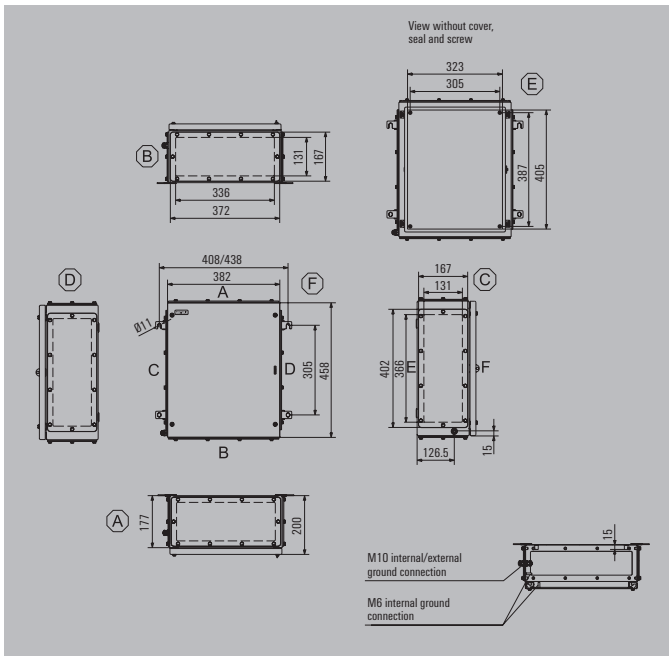

Ordering data

Stainless steel 1.4404 316L, electropolished	Order No.
1 gland plate - bottom side (B)	1195060000
2 gland plates - top and bottom sides (A & B)	1195070000
3 gland plates - bottom, left and right sides (B, C & D)	1195080000
4 gland plates - top, bottom, left and right sides (A, B, C & D)	1195090000
Note	Painted sheet steel enclosure available on request. Standard colour is similar to RAL 7035.

Accessories

Mounting plates and fastening screws	Order No.
Steel sheet, zinc plated	1193990000
Stainless steel 1.4301	1193860000
With hole pattern, natural stainless steel 1.4301	1257700000
Fastening screws for mounting plates	0642600000
Fastening screws for terminal rails	1274150000
Stainless steel spacer M6 x 8, Set of 4	
10 mm length	0935110000
15 mm length	0935120000
20 mm length	0935130000
30 mm length	0935140000
Gland plates and screws - 6 mm	
Top and bottom sides (A & B), electropolished stainless steel 1.4404	1256510000
Left and right sides (C & D), electropolished stainless steel 1.4404	1256520000
Mounting screw, stainless steel 1.4404	1253230000
Mirror-polish Stainless steel 1.4301 rain hood (2R)	
	1281460000
Label holder	
70 x 70 angled stainless steel 1.4301	1279320000
130x50 stainless steel 1.4301	1283450000
100x25 stainless steel 1.4301	1257640000
Document holder	
For DIN A6 size documents	1252780000
For DIN A5 size documents	1252750000
For DIN A4 size documents	
Set of fixings	
For label holders, rain hoods and document holders (rivet)	1252190000
For plastic (Trafolyte), identification plate (screw)	1285200000
Earthing stud	
Stainless steel 1.4404	1192690000
Padlock with two keys	
Stainless steel 1.4301	0905680000

Note

Max. number of terminals (industry)

Max. number of terminals (industry)	vertical	horizontal
2.5 mm²	3x73	4x58
4 mm²	2x62	3x48
6 mm²	2x46	3x36
10 mm²	2x37	2x29
16 mm²	2x31	2x24
35 mm²	1x23	1x18

Note

*For enclosure versions with zero, one or two gland plates, the horizontal gap between the mounting feet is reduced by 30 mm.
Assembly with terminal blocks provides for 10 mm clearance to the ends of the mounting rail.
Recommended order:
TS 35 mounting rail (screw terminal) WDU 2.5 1020000000 / (tension clamp terminal) ZDU 2.5 1608510000 / (tension clamp terminal) PDU 2.5 1896110000
TS 32 mounting rail (screw terminal) SAK 2.5 0279660000
TS 15 mounting rail (screw terminal) AKZ 2.5 0697160000

Number of cable entries

Number of cable entries	A / B	C / D
M12	50	55
M16	34	38
M20	23	24
M25	18	21
M32	10	11
M40	8	9
M50	4	4
M63	3	3
M75	2	3

Note Our IP 68 brass cable glands are used as the reference for these guideline values.

Dimensions of mounting plate

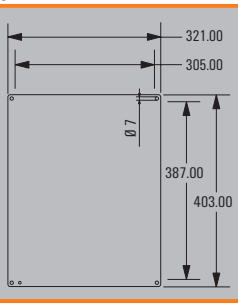

Klippon® TB MH 484815

Depth 150 mm

Height/Width/Depth	480 / 480 / 150 mm

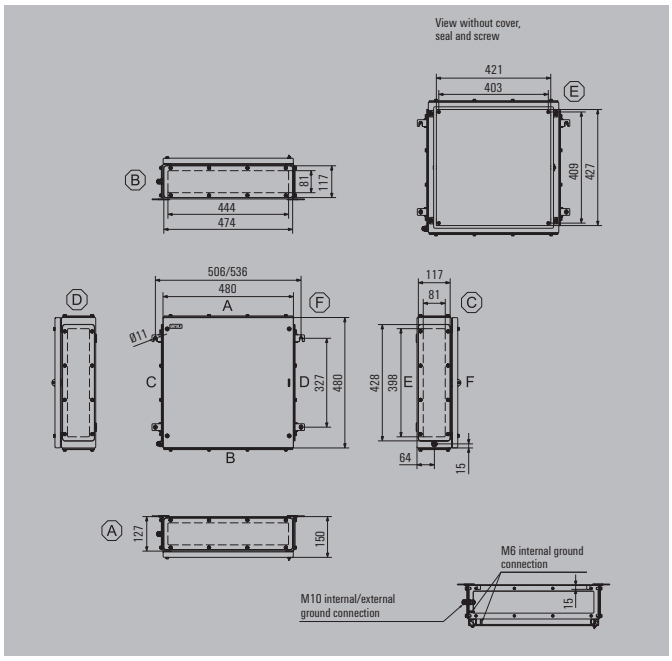

Ordering data

Stainless steel 1.4404 316L, electropolished	Order No.
1 gland plate - bottom side (B)	1195110000
2 gland plates - top and bottom sides (A & B)	1195120000
3 gland plates - bottom, left and right sides (B, C & D)	1195130000
4 gland plates - top, bottom, left and right sides (A, B, C & D)	1195140000
Note	Painted sheet steel enclosure available on request. Standard colour is similar to RAL 7035.

Accessories

Mounting plates and fastening screws	Order No.
Steel sheet, zinc plated	1194000000
Stainless steel 1.4301	1193870000
With hole pattern, natural stainless steel 1.4301	1257710000
Fastening screws for mounting plates	0642600000
Fastening screws for terminal rails	1274150000
Stainless steel spacer M6 x 8, Set of 4	
10 mm length	0935110000
15 mm length	0935120000
20 mm length	0935130000
30 mm length	0935140000
Gland plates and screws - 6 mm	
Top and bottom sides (A & B), electropolished stainless steel 1.4404	1256530000
Left and right sides (C & D), electropolished stainless steel 1.4404	1256540000
Mounting screw, stainless steel 1.4404	1253230000
Mirror-polish Stainless steel 1.4301 rain hood (2R)	
	1281470000
Label holder	
70 x 70 angled stainless steel 1.4301	1279320000
130x50 stainless steel 1.4301	1283450000
100x25 stainless steel 1.4301	1257640000
Document holder	
For DIN A6 size documents	1252780000
For DIN A5 size documents	1252750000
For DIN A4 size documents	1252730000
Set of fixings	
For label holders, rain hoods and document holders (rivet)	1252190000
For plastic (Trafolyte), identification plate (screw)	1285200000
Earthing stud	
Stainless steel 1.4404	1192690000
Padlock with two keys	
Stainless steel 1.4301	0905680000

Note

Max. number of terminals (industry)

Max. number of terminals (industry)	vertical	horizontal
2.5 mm²	4x78	4x77
4 mm²	3x65	3x64
6 mm²	3x49	3x48
10 mm²	2x39	3x39
16 mm²	2x33	2x32
35 mm²	1x25	2x24

Note

*For enclosure versions with zero, one or two gland plates, the horizontal gap between the mounting feet is reduced by 30 mm.
Assembly with terminal blocks provides for 10 mm clearance to the ends of the mounting rail.
Recommended order:
TS 35 mounting rail (screw terminal) WDU 2.5 1020000000 / (tension clamp terminal) ZDU 2.5 1608510000 / (tension clamp terminal) PDU 2.5 1896110000
TS 32 mounting rail (screw terminal) SAK 2.5 0279660000
TS 15 mounting rail (screw terminal) AKZ 2.5 0697160000

Number of cable entries

Number of cable entries	A / B	C / D
M12	39	36
M16	22	20
M20	19	17
M25	8	7
M32	7	6
M40	6	5
M50	5	4
M63	0	0
M75	0	0

Note Our IP 68 brass cable glands serve as a reference for these recommended values.

Dimensions of mounting plate

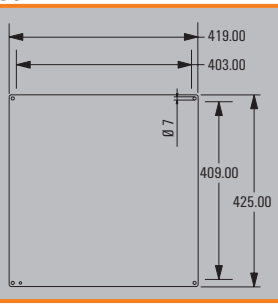

Klippon® TB MH 484820

Depth 200 mm

Height/Width/Depth	480 / 480 / 200 mm

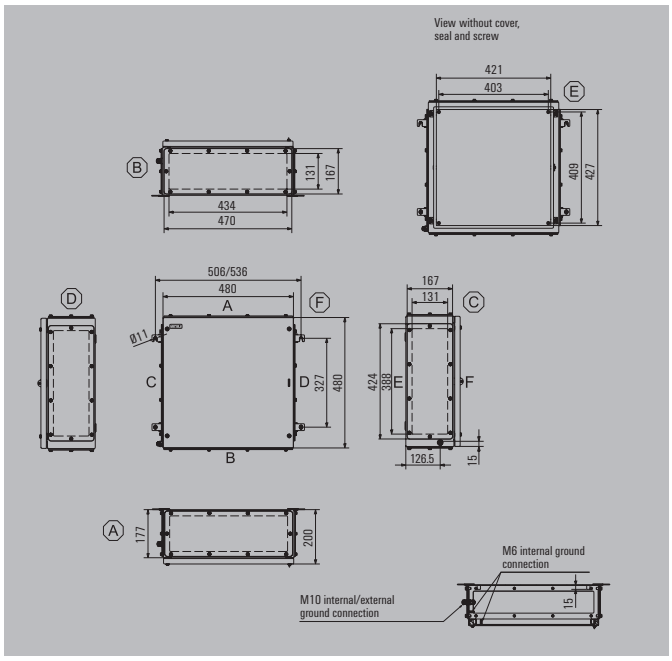

Ordering data

Stainless steel 1.4404 316L, electropolished	Order No.
1 gland plate - bottom side (B)	1195160000
2 gland plates - top and bottom sides (A & B)	1195170000
3 gland plates - bottom, left and right sides (B, C & D)	1195180000
4 gland plates - top, bottom, left and right sides (A, B, C & D)	1195190000
Note Painted sheet steel enclosure available on request. Standard colour is similar to RAL 7035.	

Accessories

Mounting plates and fastening screws	Order No.
Steel sheet, zinc plated	1194000000
Stainless steel 1.4301	1193870000
With hole pattern, natural stainless steel 1.4301	1257710000
Fastening screws for mounting plates	0642600000
Fastening screws for terminal rails	1274150000
Stainless steel spacer M6 x 8, Set of 4	
10 mm length	0935110000
15 mm length	0935120000
20 mm length	0935130000
30 mm length	0935140000
Gland plates and screws - 6 mm	
Top and bottom sides (A & B), electropolished stainless steel 1.4404	1256550000
Left and right sides (C & D), electropolished stainless steel 1.4404	1256560000
Mounting screw, stainless steel 1.4404	1253230000
Mirror-polish Stainless steel 1.4301 rain hood (2R)	
	1281480000
Label holder	
70 x 70 angled stainless steel 1.4301	1279320000
130x50 stainless steel 1.4301	1283450000
100x25 stainless steel 1.4301	1257640000
Document holder	
For DIN A6 size documents	1252780000
For DIN A5 size documents	1252750000
For DIN A4 size documents	1252730000
Set of fixings	
For label holders, rain hoods and document holders (rivet)	1252190000
For plastic (Trafolyte), identification plate (screw)	1285200000
Earthing stud	
Stainless steel 1.4404	1192690000
Padlock with two keys	
Stainless steel 1.4301	0905680000

Note

Max. number of terminals (industry)

Max. number of terminals (industry)	vertical	horizontal
2.5 mm²	4x78	4x77
4 mm²	3x65	3x64
6 mm²	3x49	3x48
10 mm²	2x39	3x39
16 mm²	2x33	2x32
35 mm²	1x25	2x24

Note *For enclosure versions with zero, one or two gland plates, the horizontal gap between the mounting feet is reduced by 30 mm.
Assembly with terminal blocks provides for 10 mm clearance to the ends of the mounting rail.
Recommended order:
TS 35 mounting rail (screw terminal) WDU 2.5 1020000000 / (tension clamp terminal) ZDU 2.5 1608510000 / (tension clamp terminal) PDU 2.5 1896110000
TS 32 mounting rail (screw terminal) SAK 2.5 0279660000
TS 15 mounting rail (screw terminal) AKZ 2.5 0697160000

Number of cable entries

Number of cable entries	A / B	C / D
M12	65	60
M16	44	40
M20	29	26
M25	24	21
M32	13	12
M40	11	10
M50	5	4
M63	4	4
M75	3	3

Note Our IP 68 brass cable glands are used as the reference for these guideline values.

Dimensions of mounting plate

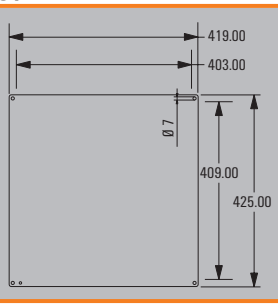

Klippon® TB MH 553515

Depth 150 mm

Height/Width/Depth	550 / 350 / 150 mm

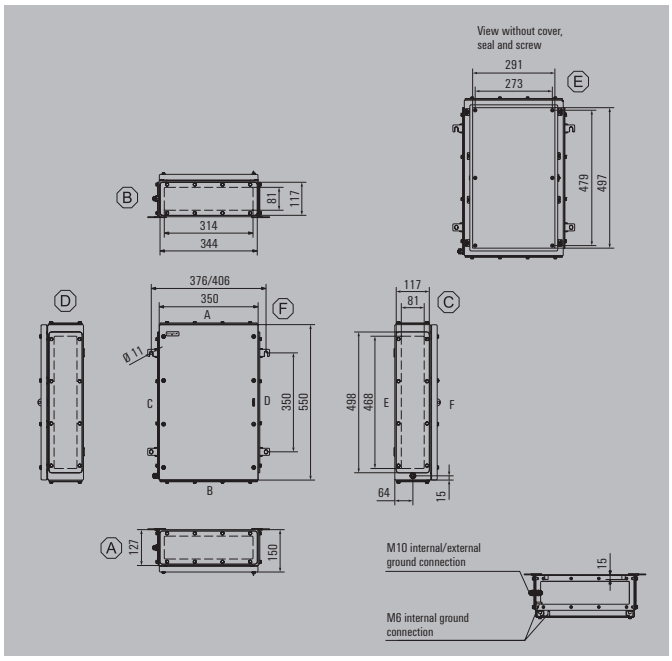

Ordering data

Stainless steel 1.4404 316L, electropolished	Order No.
1 gland plate - bottom side (B)	1195210000
2 gland plates - top and bottom sides (A & B)	1195220000
3 gland plates - bottom, left and right sides (B, C & D)	1195230000
4 gland plates - top, bottom, left and right sides (A, B, C & D)	1195240000
Note	Painted sheet steel enclosure available on request. Standard colour is similar to RAL 7035.

Accessories

Mounting plates and fastening screws	Order No.
Steel sheet, zinc plated	1194010000
Stainless steel 1.4301	1193880000
With hole pattern, natural stainless steel 1.4301	1257720000
Fastening screws for mounting plates	0642600000
Fastening screws for terminal rails	1274150000
Stainless steel spacer M6 x 8, Set of 4	
10 mm length	0935110000
15 mm length	0935120000
20 mm length	0935130000
30 mm length	0935140000
Gland plates and screws - 6 mm	
Top and bottom sides (A & B), electropolished stainless steel 1.4404	1256570000
Left and right sides (C & D), electropolished stainless steel 1.4404	1256580000
Mounting screw, stainless steel 1.4404	1253230000
Mirror-polish Stainless steel 1.4301 rain hood (2R)	
	1281490000
Label holder	
70 x 70 angled stainless steel 1.4301	1279320000
130x50 stainless steel 1.4301	1283450000
100x25 stainless steel 1.4301	1257640000
Document holder	
For DIN A6 size documents	1252780000
For DIN A5 size documents	1252750000
For DIN A4 size documents	1252730000
Set of fixings	
For label holders, rain hoods and document holders (rivet)	1252190000
For plastic (Trafolyte), identification plate (screw)	1285200000
Earthing stud	
Stainless steel 1.4404	1192690000
Padlock with two keys	
Stainless steel 1.4301	0905680000

Note

Max. number of terminals (industry)

Max. number of terminals (industry)	vertical	horizontal
2.5 mm²	2x91	4x52
4 mm²	2x76	4x43
6 mm²	2x58	4x32
10 mm²	2x46	3x26
16 mm²	1x39	3x22
35 mm²	1x29	2x16

Note

*For enclosure versions with zero, one or two gland plates, the horizontal gap between the mounting feet is reduced by 30 mm.
Assembly with terminal blocks provides for 10 mm clearance to the ends of the mounting rail.
Recommended order:
TS 35 mounting rail (screw terminal) WDU 2.5 1020000000 / (tension clamp terminal) ZDU 2.5 1608510000 / (tension clamp terminal) PDU 2.5 1896110000
TS 32 mounting rail (screw terminal) SAK 2.5 0279660000
TS 15 mounting rail (screw terminal) AKZ 2.5 0697160000

Number of cable entries

Number of cable entries	A / B	C / D
M12	27	42
M16	15	24
M20	13	20
M25	6	9
M32	5	7
M40	4	6
M50	3	5
M63	0	0
M75	0	0

Note Our IP 68 brass cable glands are used as the reference for these guideline values.

Dimensions of mounting plate

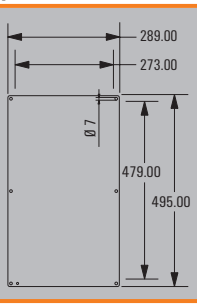

Klippon® TB MH 553520

Depth 200 mm

Height/Width/Depth	550 / 350 / 200 mm

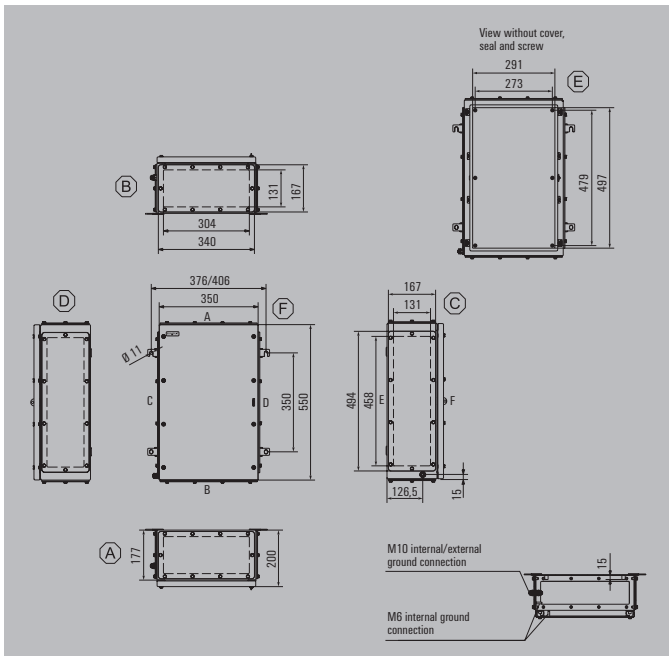

Ordering data

Stainless steel 1.4404 316L, electropolished	Order No.
1 gland plate - bottom side (B)	1195260000
2 gland plates - top and bottom sides (A & B)	1195270000
3 gland plates - bottom, left and right sides (B, C & D)	1195280000
4 gland plates - top, bottom, left and right sides (A, B, C & D)	1195290000
Note	Painted sheet steel enclosure available on request. Standard colour is similar to RAL 7035.

Accessories

Mounting plates and fastening screws	Order No.
Steel sheet, zinc plated	1194010000
Stainless steel 1.4301	1193880000
With hole pattern, natural stainless steel 1.4301	1257720000
Fastening screws for mounting plates	0642600000
Fastening screws for terminal rails	1274150000
Stainless steel spacer M6 x 8, Set of 4	
10 mm length	0935110000
15 mm length	0935120000
20 mm length	0935130000
30 mm length	0935140000
Gland plates and screws - 6 mm	
Top and bottom sides (A & B), electropolished stainless steel 1.4404	1256590000
Left and right sides (C & D), electropolished stainless steel 1.4404	1256610000
Mounting screw, stainless steel 1.4404	1253230000
Mirror-polish Stainless steel 1.4301 rain hood (2R)	
	1281500000
Label holder	
70 x 70 angled stainless steel 1.4301	1279320000
130x50 stainless steel 1.4301	1283450000
100x25 stainless steel 1.4301	1257640000
Document holder	
For DIN A6 size documents	1252780000
For DIN A5 size documents	1252750000
For DIN A4 size documents	1252730000
Set of fixings	
For label holders, rain hoods and document holders (rivet)	1252190000
For plastic (Trafolyte), identification plate (screw)	1285200000
Earthing stud	
Stainless steel 1.4404	1192690000
Padlock with two keys	
Stainless steel 1.4301	0905680000

Note

Max. number of terminals (industry)

Max. number of terminals (industry)	vertical	horizontal
2.5 mm²	2x91	4x52
4 mm²	2x76	4x43
6 mm²	2x58	4x32
10 mm²	2x46	3x26
16 mm²	1x39	3x22
35 mm²	1x29	2x16

Note

*For enclosure versions with zero, one or two gland plates, the horizontal gap between the mounting feet is reduced by 30 mm.
Assembly with terminal blocks provides for 10 mm clearance to the ends of the mounting rail.
Recommended order:
TS 35 mounting rail (screw terminal) WDU 2.5 1020000000 / (tension clamp terminal) ZDU 2.5 1608510000 / (tension clamp terminal) PDU 2.5 1896110000
TS 32 mounting rail (screw terminal) SAK 2.5 0279660000
TS 15 mounting rail (screw terminal) AKZ 2.5 0697160000

Number of cable entries

Number of cable entries	A / B	C / D
M12	45	70
M16	30	48
M20	20	30
M25	17	26
M32	9	14
M40	7	12
M50	3	5
M63	3	4
M75	2	3

Note Our IP 68 brass cable glands serve as a reference for these recommended values.

Dimensions of mounting plate

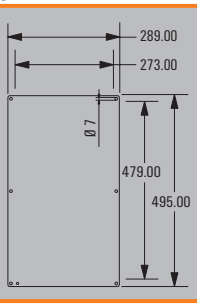

Klippon® TB MH 624515

Depth 150 mm

Height/Width/Depth	620 / 450 / 150 mm

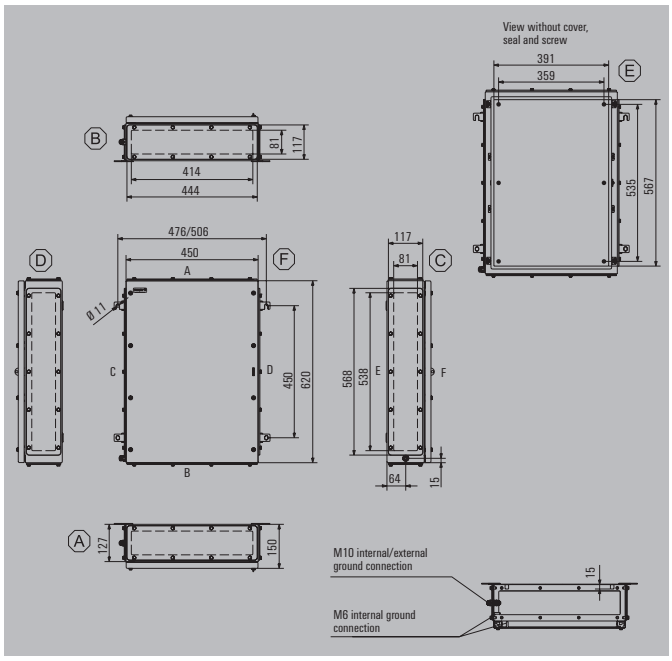

Ordering data

Stainless steel 1.4404 316L, electropolished	Order No.
1 gland plate - bottom side (B)	1195310000
2 gland plates - top and bottom sides (A & B)	1195320000
3 gland plates - bottom, left and right sides (B, C & D)	1195330000
4 gland plates - top, bottom, left and right sides (A, B, C & D)	1195340000
Note	Painted sheet steel enclosure available on request. Standard colour is similar to RAL 7035.

Max. number of terminals (industry)

Max. number of terminals (industry)	vertical	horizontal
2.5 mm²	3x105	5x71
4 mm²	3x88	5x59
6 mm²	3x66	4x45
10 mm²	2x53	4x36
16 mm²	2x44	3x30
35 mm²	1x33	2x22

Note

*For enclosure versions with zero, one or two gland plates, the horizontal gap between the mounting feet is reduced by 30 mm.
Assembly with terminal blocks provides for 10 mm clearance to the ends of the mounting rail.
Recommended order:
TS 35 mounting rail (screw terminal) WDU 2.5 1020000000 / (tension clamp terminal) ZDU 2.5 1608510000 / (tension clamp terminal) PDU 2.5 1896110000
TS 32 mounting rail (screw terminal) SAK 2.5 0279660000
TS 15 mounting rail (screw terminal) AKZ 2.5 0697160000

Accessories

Mounting plates and fastening screws	Order No.
Steel sheet, zinc plated	1194020000
Stainless steel 1.4301	1193890000
With hole pattern, natural stainless steel 1.4301	1257740000
Fastening screws for mounting plates	0642600000
Fastening screws for terminal rails	1274150000
Stainless steel spacer M6 x 8, Set of 4	
10 mm length	0935110000
15 mm length	0935120000
20 mm length	0935130000
30 mm length	0935140000
Gland plates and screws - 6 mm	
Top and bottom sides (A & B), electropolished stainless steel 1.4404	1256620000
Left and right sides (C & D), electropolished stainless steel 1.4404	1256630000
Mounting screw, stainless steel 1.4404	1253230000
Mirror-polish Stainless steel 1.4301 rain hood (2R)	
	1281510000
Label holder	
70 x 70 angled stainless steel 1.4301	1279320000
130x50 stainless steel 1.4301	1283450000
100x25 stainless steel 1.4301	1257640000
Document holder	
For DIN A6 size documents	1252780000
For DIN A5 size documents	1252750000
For DIN A4 size documents	1252730000
Set of fixings	
For label holders, rain hoods and document holders (rivet)	1252190000
For plastic (Trafolyte), identification plate (screw)	1285200000
Earthing stud	
Stainless steel 1.4404	1192690000
Padlock with two keys	
Stainless steel 1.4301	0905680000

Note

Number of cable entries

Number of cable entries	A / B	C / D
M12	38	48
M16	21	27
M20	18	24
M25	8	10
M32	6	9
M40	5	7
M50	4	6
M63	0	0
M75	0	0

Note Our IP 68 brass cable glands serve as a reference for these recommended values.

Dimensions of mounting plate

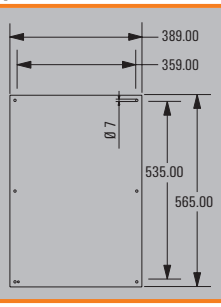

Klippon® TB MH 624520

Depth 200 mm

Height/Width/Depth	620 / 450 / 200 mm

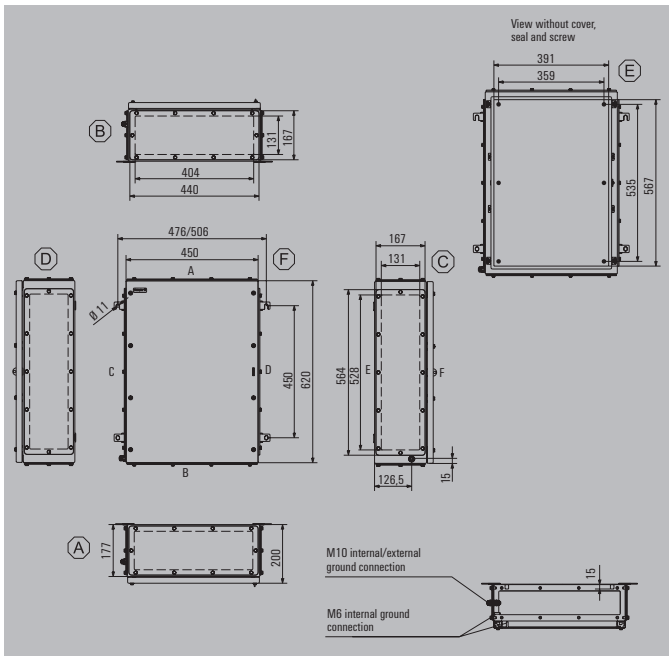

Ordering data

Stainless steel 1.4404 316L, electropolished	Order No.
1 gland plate - bottom side (B)	1195360000
2 gland plates - top and bottom sides (A & B)	1195370000
3 gland plates - bottom, left and right sides (B, C & D)	1195380000
4 gland plates - top, bottom, left and right sides (A, B, C & D)	1195390000
Note Painted sheet steel enclosure available on request. Standard colour is similar to RAL 7035.	

Accessories

Mounting plates and fastening screws	Order No.
Steel sheet, zinc plated	1194020000
Stainless steel 1.4301	1193890000
With hole pattern, natural stainless steel 1.4301	1257740000
Fastening screws for mounting plates	0642600000
Fastening screws for terminal rails	1274150000
Stainless steel spacer M6 x 8, Set of 4	
10 mm length	0935110000
15 mm length	0935120000
20 mm length	0935130000
30 mm length	0935140000
Gland plates and screws - 6 mm	
Top and bottom sides (A & B), electropolished stainless steel 1.4404	1256640000
Left and right sides (C & D), electropolished stainless steel 1.4404	1256650000
Mounting screw, stainless steel 1.4404	1253230000
Mirror-polish Stainless steel 1.4301 rain hood (2R)	
	1281520000
Label holder	
70 x 70 angled stainless steel 1.4301	1279320000
130x50 stainless steel 1.4301	1283450000
100x25 stainless steel 1.4301	1257640000
Document holder	
For DIN A6 size documents	1252780000
For DIN A5 size documents	1252750000
For DIN A4 size documents	1252730000
Set of fixings	
For label holders, rain hoods and document holders (rivet)	1252190000
For plastic (Trafolyte), identification plate (screw)	1285200000
Earthing stud	
Stainless steel 1.4404	1192690000
Padlock with two keys	
Stainless steel 1.4301	0905680000

Note

Max. number of terminals (industry)

Max. number of terminals (industry)	vertical	horizontal
2.5 mm²	3x105	5x71
4 mm²	3x88	5x59
6 mm²	3x66	4x45
10 mm²	2x53	4x36
16 mm²	2x44	3x30
35 mm²	1x33	2x22

Note *For enclosure versions with zero, one or two gland plates, the horizontal gap between the mounting feet is reduced by 30 mm.
Assembly with terminal blocks provides for 10 mm clearance to the ends of the mounting rail.
Recommended order:
TS 35 mounting rail (screw terminal) WDU 2.5 1020000000 / (tension clamp terminal) ZDU 2.5 1608510000 / (tension clamp terminal) PDU 2.5 1896110000
TS 32 mounting rail (screw terminal) SAK 2.5 0279660000
TS 15 mounting rail (screw terminal) AKZ 2.5 0697160000

Number of cable entries

Number of cable entries	A / B	C / D
M12	63	80
M16	42	54
M20	27	36
M25	23	30
M32	12	17
M40	10	14
M50	4	6
M63	4	5
M75	3	4

Note Our IP 68 brass cable glands are used as the reference for these guideline values.

Dimensions of mounting plate

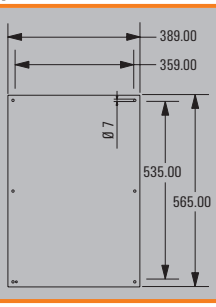

Klippon® TB MH 765015

Depth 150 mm

Height/Width/Depth	762 / 508 / 150 mm

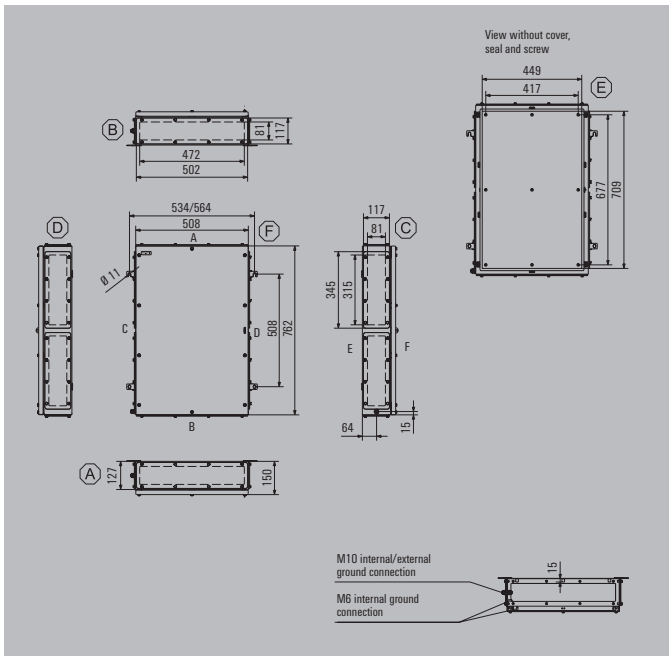

Ordering data

Stainless steel 1.4404 316L, electropolished	Order No.
1 gland plate - bottom side (B)	1195410000
2 gland plates - top and bottom sides (A & B)	1195420000
3 gland plates - bottom, left and right sides (B, C & D)	1195430000
4 gland plates - top, bottom, left and right sides (A, B, C & D)	1195440000
Note Painted sheet steel enclosure available on request. Standard colour is similar to RAL 7035.	

Accessories

Mounting plates and fastening screws	Order No.
Steel sheet, zinc plated	1194030000
Stainless steel 1.4301	1193900000
With hole pattern, natural stainless steel 1.4301	1257750000
Fastening screws for mounting plates	0642600000
Fastening screws for terminal rails	1274150000
Stainless steel spacer M6 x 8, Set of 4	
10 mm length	0935110000
15 mm length	0935120000
20 mm length	0935130000
30 mm length	0935140000
Gland plates and screws - 6 mm	
Top and bottom sides (A & B), electropolished stainless steel 1.4404	1256660000
Left and right sides (C & D), electropolished stainless steel 1.4404	1256670000
Mounting screw, stainless steel 1.4404	1253230000
Mirror-polish Stainless steel 1.4301 rain hood (2R)	
	1281530000
Label holder	
70 x 70 angled stainless steel 1.4301	1279320000
130x50 stainless steel 1.4301	1283450000
100x25 stainless steel 1.4301	1257640000
Document holder	
For DIN A6 size documents	1252780000
For DIN A5 size documents	1252750000
For DIN A4 size documents	1252730000
Set of fixings	
For label holders, rain hoods and document holders (rivet)	1252190000
For plastic (Trafolyte), identification plate (screw)	1285200000
Earthing stud	
Stainless steel 1.4404	1192690000
Padlock with two keys	
Stainless steel 1.4301	0905680000

Note

Max. number of terminals (industry)

Max. number of terminals (industry)	vertical	horizontal
2.5 mm²	4x132	7x82
4 mm²	4x111	6x69
6 mm²	3x83	5x52
10 mm²	3x67	5x42
16 mm²	2x56	4x35
35 mm²	2x42	3x26

Note

*For enclosure versions with zero, one or two gland plates, the horizontal gap between the mounting feet is reduced by 30 mm.
Assembly with terminal blocks provides for 10 mm clearance to the ends of the mounting rail.
Recommended order:
TS 35 mounting rail (screw terminal) WDU 2.5 1020000000 / (tension clamp terminal) ZDU 2.5 1608510000 / (tension clamp terminal) PDU 2.5 1896110000
TS 32 mounting rail (screw terminal) SAK 2.5 0279660000
TS 15 mounting rail (screw terminal) AKZ 2.5 0697160000

Number of cable entries

Number of cable entries	A / B	C / D
M12	42	58
M16	24	32
M20	21	26
M25	9	12
M32	7	10
M40	6	8
M50	5	6
M63	0	0
M75	0	0

Note Our IP 68 brass cable glands serve as a reference for these recommended values.

Dimensions of mounting plate

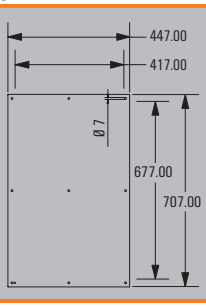

Klippon® TB MH 765020

Depth 200 mm

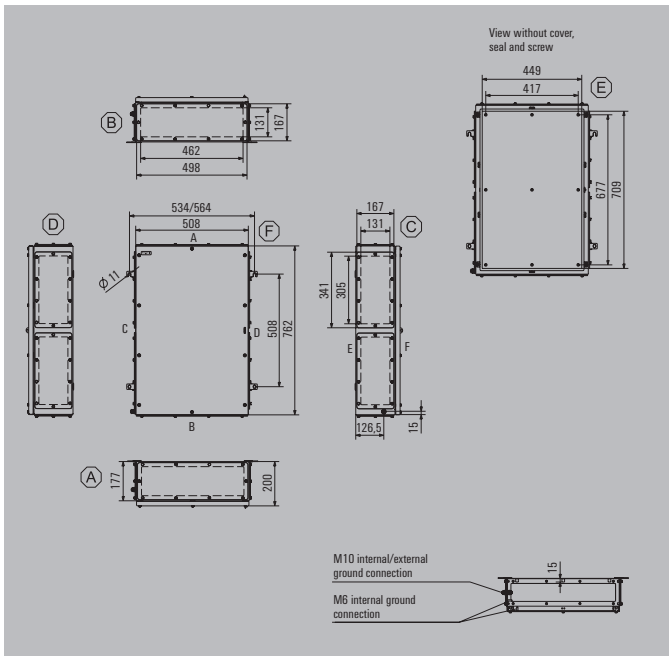

Height/Width/Depth	762 / 508 / 200 mm

Ordering data

Stainless steel 1.4404 316L, electropolished	Order No.
1 gland plate - bottom side (B)	1195460000
2 gland plates - top and bottom sides (A & B)	1195470000
3 gland plates - bottom, left and right sides (B, C & D)	1195480000
4 gland plates - top, bottom, left and right sides (A, B, C & D)	1195490000

Note Painted sheet steel enclosure available on request. Standard colour is similar to RAL 7035.

Accessories

Mounting plates and fastening screws	Order No.
Steel sheet, zinc plated	1194030000
Stainless steel 1.4301	1193900000
With hole pattern, natural stainless steel 1.4301	1257750000
Fastening screws for mounting plates	0642600000
Fastening screws for terminal rails	1274150000
Stainless steel spacer M6 x 8, Set of 4	
10 mm length	0935110000
15 mm length	0935120000
20 mm length	0935130000
30 mm length	0935140000
Gland plates and screws - 6 mm	
Top and bottom sides (A & B), electropolished stainless steel 1.4404	1256680000
Left and right sides (C & D), electropolished stainless steel 1.4404	1256690000
Mounting screw, stainless steel 1.4404	1253230000
Mirror-polish Stainless steel 1.4301 rain hood (2R)	
	1281540000
Label holder	
70 x 70 angled stainless steel 1.4301	1279320000
130x50 stainless steel 1.4301	1283450000
100x25 stainless steel 1.4301	1257640000
Document holder	
For DIN A6 size documents	1252780000
For DIN A5 size documents	1252750000
For DIN A4 size documents	1252730000
Set of fixings	
For label holders, rain hoods and document holders (rivet)	1252190000
For plastic (Trafolyte), identification plate (screw)	1285200000
Earthing stud	
Stainless steel 1.4404	1192690000
Padlock with two keys	
Stainless steel 1.4301	0905680000

Note

Max. number of terminals (industry)

Max. number of terminals (industry)	vertical	horizontal
2.5 mm²	4x132	7x82
4 mm²	4x111	6x69
6 mm²	3x83	5x52
10 mm²	3x67	5x42
16 mm²	2x56	4x35
35 mm²	2x42	3x26

Note *For enclosure versions with zero, one or two gland plates, the horizontal gap between the mounting feet is reduced by 30 mm.
Assembly with terminal blocks provides for 10 mm clearance to the ends of the mounting rail.
Recommended order:
TS 35 mounting rail (screw terminal) WDU 2.5 1020000000 / (tension clamp terminal) ZDU 2.5 1608510000 / (tension clamp terminal) PDU 2.5 1896110000
TS 32 mounting rail (screw terminal) SAK 2.5 0279660000
TS 15 mounting rail (screw terminal) AKZ 2.5 0697160000

Number of cable entries

Number of cable entries	A / B	C / D
M12	70	96
M16	48	64
M20	32	40
M25	26	34
M32	14	18
M40	12	14
M50	5	6
M63	4	6
M75	3	4

Note Our IP 68 brass cable glands are used as the reference for these guideline values.

Dimensions of mounting plate

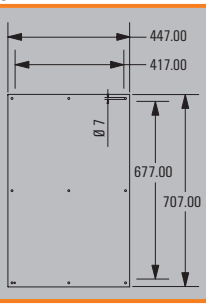

Klippon® TB MH 916115

Depth 150 mm

Height/Width/Depth	914 / 610 / 150 mm

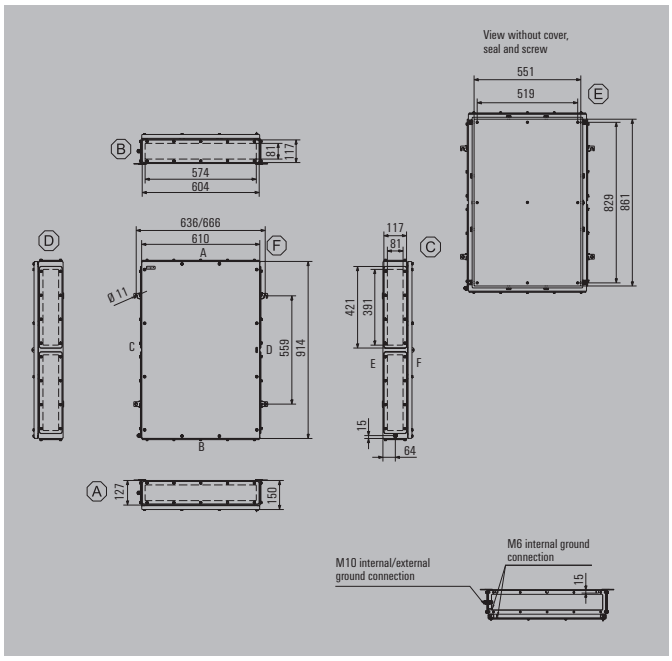

Ordering data

Stainless steel 1.4404 316L, electropolished	Order No.
1 gland plate - bottom side (B)	1195510000
2 gland plates - top and bottom sides (A & B)	1195520000
3 gland plates - bottom, left and right sides (B, C & D)	1195530000
4 gland plates - top, bottom, left and right sides (A, B, C & D)	1195540000
Note Painted sheet steel enclosure available on request. Standard colour is similar to RAL 7035.	

Accessories

Mounting plates and fastening screws	Order No.
Steel sheet, zinc plated	1194040000
Stainless steel 1.4301	1193910000
With hole pattern, natural stainless steel 1.4301	1257760000
Fastening screws for mounting plates	0642600000
Fastening screws for terminal rails	1274150000
Stainless steel spacer M6 x 8, Set of 4	
10 mm length	0935110000
15 mm length	0935120000
20 mm length	0935130000
30 mm length	0935140000
Gland plates and screws - 6 mm	
Top and bottom sides (A & B), electropolished stainless steel 1.4404	1256710000
Left and right sides (C & D), electropolished stainless steel 1.4404	1256720000
Mounting screw, stainless steel 1.4404	1253230000
Mirror-polish Stainless steel 1.4301 rain hood (2R)	
	1281550000
Label holder	
70 x 70 angled stainless steel 1.4301	1279320000
130x50 stainless steel 1.4301	1283450000
100x25 stainless steel 1.4301	1257640000
Document holder	
For DIN A6 size documents	1252780000
For DIN A5 size documents	1252750000
For DIN A4 size documents	1252730000
Set of fixings	
For label holders, rain hoods and document holders (rivet)	1252190000
For plastic (Trafolyte), identification plate (screw)	1285200000
Earthing stud	
Stainless steel 1.4404	1192690000
Padlock with two keys	
Stainless steel 1.4301	0905680000

Note

Max. number of terminals (industry)

Max. number of terminals (industry)	vertical	horizontal
2.5 mm²	5x161	8x102
4 mm²	4x135	7x85
6 mm²	4x102	7x64
10 mm²	3x82	6x52
16 mm²	3x68	5x43
35 mm²	2x51	4x32

Note

*For enclosure versions with zero, one or two gland plates, the horizontal gap between the mounting feet is reduced by 30 mm.
Assembly with terminal blocks provides for 10 mm clearance to the ends of the mounting rail.
Recommended order:
TS 35 mounting rail (screw terminal) WDU 2.5 1020000000 / (tension clamp terminal) ZDU 2.5 1608510000 / (tension clamp terminal) PDU 2.5 1896110000
TS 32 mounting rail (screw terminal) SAK 2.5 0279660000
TS 15 mounting rail (screw terminal) AKZ 2.5 0697160000

Number of cable entries

Number of cable entries	A / B	C / D
M12	53	70
M16	29	40
M20	25	34
M25	11	14
M32	9	12
M40	8	10
M50	6	8
M63	0	0
M75	0	0

Note Our IP 68 brass cable glands serve as a reference for these recommended values.

Dimensions of mounting plate

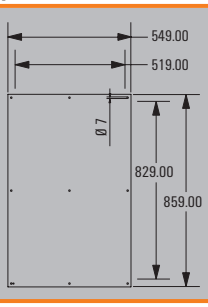

Klippon® TB MH 916120

Depth 200 mm

Height/Width/Depth	914 / 610 / 200 mm

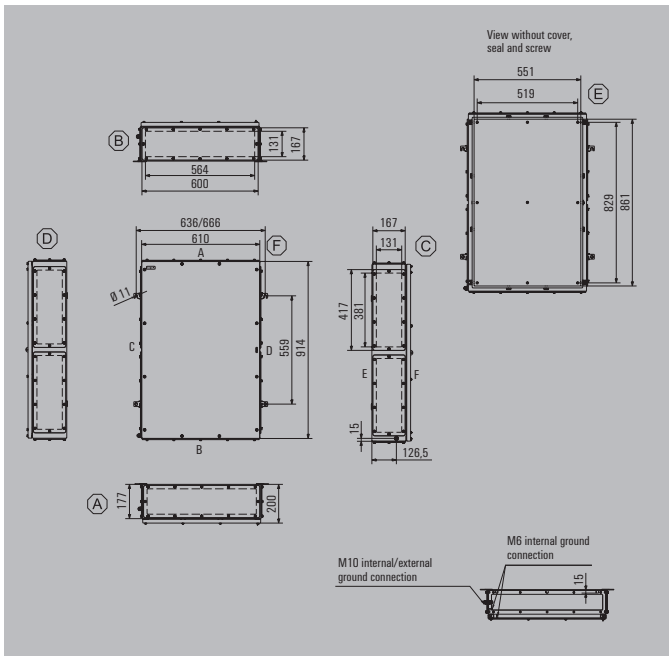

Ordering data

Stainless steel 1.4404 316L, electropolished	Order No.
1 gland plate - bottom side (B)	1195560000
2 gland plates - top and bottom sides (A & B)	1195570000
3 gland plates - bottom, left and right sides (B, C & D)	1195580000
4 gland plates - top, bottom, left and right sides (A, B, C & D)	1195590000
Note	Painted sheet steel enclosure available on request. Standard colour is similar to RAL 7035.

Accessories

Mounting plates and fastening screws	Order No.
Steel sheet, zinc plated	1194040000
Stainless steel 1.4301	1193910000
With hole pattern, natural stainless steel 1.4301	1257760000
Fastening screws for mounting plates	0642600000
Fastening screws for terminal rails	1274150000
Stainless steel spacer M6 x 8, Set of 4	
10 mm length	0935110000
15 mm length	0935120000
20 mm length	0935130000
30 mm length	0935140000
Gland plates and screws - 6 mm	
Top and bottom sides (A & B), electropolished stainless steel 1.4404	1256730000
Left and right sides (C & D), electropolished stainless steel 1.4404	1256740000
Mounting screw, stainless steel 1.4404	1253230000
Mirror-polish Stainless steel 1.4301 rain hood (2R)	
	1281570000
Label holder	
70 x 70 angled stainless steel 1.4301	1279320000
130x50 stainless steel 1.4301	1283450000
100x25 stainless steel 1.4301	1257640000
Document holder	
For DIN A6 size documents	1252780000
For DIN A5 size documents	1252750000
For DIN A4 size documents	1252730000
Set of fixings	
For label holders, rain hoods and document holders (rivet)	1252190000
For plastic (Trafolyte), identification plate (screw)	1285200000
Earthing stud	
Stainless steel 1.4404	1192690000
Padlock with two keys	
Stainless steel 1.4301	0905680000

Note

Max. number of terminals (industry)

Max. number of terminals (industry)	vertical	horizontal
2.5 mm²	5x161	8x102
4 mm²	4x135	7x85
6 mm²	4x102	7x64
10 mm²	3x82	6x52
16 mm²	3x68	5x43
35 mm²	2x51	4x32

Note

*For enclosure versions with zero, one or two gland plates, the horizontal gap between the mounting feet is reduced by 30 mm.
Assembly with terminal blocks provides for 10 mm clearance to the ends of the mounting rail.
Recommended order:
TS 35 mounting rail (screw terminal) WDU 2.5 1020000000 / (tension clamp terminal) ZDU 2.5 1608510000 / (tension clamp terminal) PDU 2.5 1896110000
TS 32 mounting rail (screw terminal) SAK 2.5 0279660000
TS 15 mounting rail (screw terminal) AKZ 2.5 0697160000

Number of cable entries

Number of cable entries	A / B	C / D
M12	88	116
M16	58	80
M20	38	52
M25	33	42
M32	18	24
M40	15	20
M50	6	8
M63	5	6
M75	4	6

Note Our IP 68 brass cable glands are used as the reference for these guideline values.

Dimensions of mounting plate

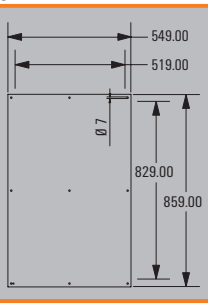

Klippon® TB MH 987420

Depth 200 mm

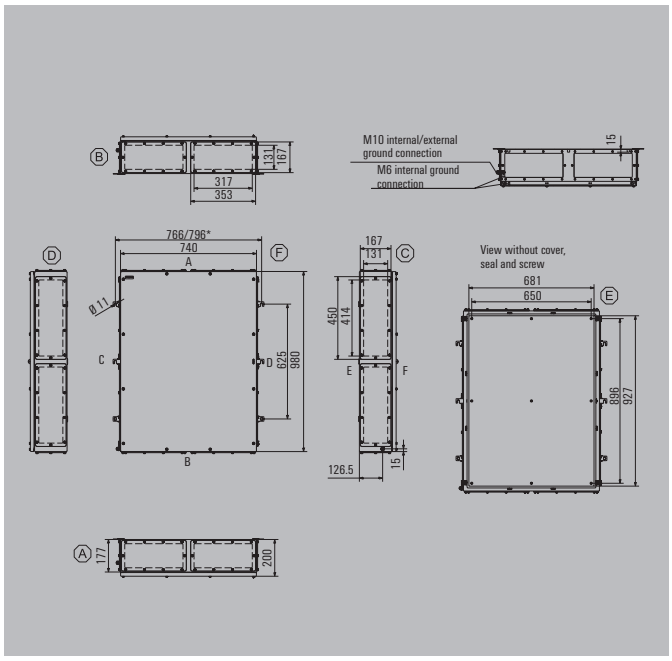

Height/Width/Depth	980 / 740 / 200 mm

Ordering data

Stainless steel 1.4404 316L, electropolished	Order No.
1 gland plate - bottom side (B)	1195610000
2 gland plates - top and bottom sides (A & B)	1195620000
3 gland plates - bottom, left and right sides (B, C & D)	1195630000
4 gland plates - top, bottom, left and right sides (A, B, C & D)	1195640000
Note Painted sheet steel enclosure available on request. Standard colour is similar to RAL 7035.	

Accessories

Mounting plates and fastening screws	Order No.
Steel sheet, zinc plated	1194050000
Stainless steel 1.4301	1193920000
With hole pattern, natural stainless steel 1.4301	1257770000
Fastening screws for mounting plates	0642600000
Fastening screws for terminal rails	1274150000
Stainless steel spacer M6 x 8, Set of 4	
10 mm length	0935110000
15 mm length	0935120000
20 mm length	0935130000
30 mm length	0935140000
Gland plates and screws - 6 mm	
Top and bottom sides (A & B), electropolished stainless steel 1.4404	1256750000
Left and right sides (C & D), electropolished stainless steel 1.4404	1256760000
Mounting screw, stainless steel 1.4404	1253230000
Mirror-polish Stainless steel 1.4301 rain hood (2R)	
	1281580000
Label holder	
70 x 70 angled stainless steel 1.4301	1279320000
130x50 stainless steel 1.4301	1283450000
100x25 stainless steel 1.4301	1257640000
Document holder	
For DIN A6 size documents	1252780000
For DIN A5 size documents	1252750000
For DIN A4 size documents	1252730000
Set of fixings	
For label holders, rain hoods and document holders (rivet)	1252190000
For plastic (Trafolyte), identification plate (screw)	1285200000
Earthing stud	
Stainless steel 1.4404	1192690000
Padlock with two keys	
Stainless steel 1.4301	0905680000

Note

Max. number of terminals (industry)

Max. number of terminals (industry)	vertical	horizontal
2.5 mm²	6x174	9x127
4 mm²	6x146	8x106
6 mm²	5x110	7x80
10 mm²	4x88	6x64
16 mm²	4x74	5x54
35 mm²	3x55	4x40

Note

*For enclosure versions with zero, one or two gland plates, the horizontal gap between the mounting feet is reduced by 30 mm.
Assembly with terminal blocks provides for 10 mm clearance to the ends of the mounting rail.
Recommended order:
TS 35 mounting rail (screw terminal) WDU 2.5 1020000000 / (tension clamp terminal) ZDU 2.5 1608510000 / (tension clamp terminal) PDU 2.5 1896110000
TS 32 mounting rail (screw terminal) SAK 2.5 0279660000
TS 15 mounting rail (screw terminal) AKZ 2.5 0697160000

Number of cable entries

Number of cable entries	A / B	C / D
M12	96	126
M16	64	84
M20	42	54
M25	36	48
M32	20	26
M40	16	22
M50	6	10
M63	6	8
M75	4	6

Note Our IP 68 brass cable glands serve as a reference for these recommended values.

Dimensions of mounting plate

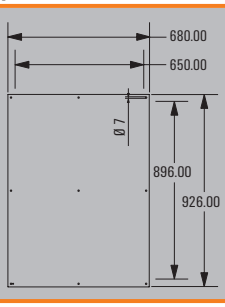

Klippon® TB QL - Quarter Lock

Steel enclosures
for use in industrial and in explosive hazard areas

The Klippon® TB enclosure range features excellent performance characteristics, even under the most difficult environmental conditions, and comply with the stricter requirements of explosive hazard areas found in the process or power generation industries. The Klippon® TB QL enclosure range offers further improvements to a product line that is already successfully leading the market.

Weidmüller can manufacture and supply this enclosure to match customer specifications and fitted with all necessary terminals and cable glands.

Overview of enclosures

Ordering data

Description	Length x width x depth in mm	1 Gland Plate (below)	2 Gland Plates (above + below)	3 Gland Plates (below + sides)	4 Gland Plates (all sides)
KTB QL 221513 S4E_*	229 x 152 x 133	1199860000	1199870000	1199880000	1199890000
KTB QL 262615 S4E_*	260 x 260 x 150	1199910000	1199920000	1199930000	1199940000
KTB QL 262620 S4E_*	260 x 260 x 200	1199960000	1199970000	1199980000	1199990000
KTB QL 303015 S4E_*	306 x 306 x 150	1200020000	1200030000	1200040000	1200050000
KTB QL 303020 S4E_*	306 x 306 x 200	1200070000	1200080000	1200090000	1200100000
KTB QL 352615 S4E_*	350 x 260 x 150	1200120000	1200130000	1200140000	1200150000
KTB QL 352620 S4E_*	350 x 260 x 200	1200170000	1200180000	1200190000	1200210000
KTB QL 403015 S4E_*	400 x 300 x 150	1200230000	1200240000	1200250000	1200260000
KTB QL 403020 S4E_*	400 x 300 x 200	1200280000	1200290000	1200310000	1200320000
KTB QL 453815 S4E_*	458 x 382 x 150	1200340000	1200350000	1200360000	1200370000
KTB QL 453820 S4E_*	458 x 382 x 200	1200390000	1200410000	1200420000	1200430000
KTB QL 484815 S4E_*	480 x 480 x 150	1200450000	1200460000	1200470000	1200480000
KTB QL 484820 S4E_*	480 x 480 x 200	1200510000	1200520000	1200530000	1200540000
KTB QL 553515 S4E_*	550 x 350 x 150	1200560000	1200570000	1200580000	1200590000
KTB QL 553520 S4E_*	550 x 350 x 200	1200620000	1200630000	1200640000	1200650000
KTB QL 624515 S4E_*	620 x 450 x 150	1200670000	1200680000	1200690000	1200710000
KTB QL 624520 S4E_*	620 x 450 x 200	1200730000	1200740000	1200750000	1200760000
KTB QL 765015 S4E_*	762 x 508 x 150	1200780000	1200790000	1200810000	1200820000
KTB QL 765020 S4E_*	762 x 508 x 200	1200840000	1200850000	1200860000	1200870000
KTB QL 916115 S4E_*	914 x 610 x 150	1200890000	1200910000	1200920000	1200930000
KTB QL 916120 S4E_*	914 x 610 x 200	1200950000	1200960000	1200970000	1200980000
KTB QL 987420 S4E_*	980 x 740 x 200	1201010000	1201020000	1201030000	1201040000
Note		* Placeholder for the number of gland plates (1, 2, 3, 4). Klippon® TB QL enclosures are available without gland plates on request.			

Technical Overview

Features

- Available in 12 sizes and 3 standard depths
- Equipped with up to 4 gland plates
- The gasket is protected against compression
- Quick-locking lid, comes with a slot as standard
- Improved temperature performance
- IP66 protection class
- Earth studs in enclosure cover and bottom section
- Welded mounting feet

Note

Technical data

Enclosure material**	Stainless steel 1.4404 (316L) 1.5 mm
Surface finish	Electropolished
IP protection class	IP 66 to IEC EN 60079-0
NEMA protection classes	3, 4x, 12
Gland plates	1 - 4 (fixed with M6 hexagon head screws and 10 mm heads), optionally without a gland plate
Gland plate thickness	3 mm (other thickness of up to 20 mm are available on request)
Earthing inside	Enclosure base and lid: welded M6 stainless steel earth studs
Earthing outside	Continuous M10 brass earth stud (optionally with stainless-steel earth stud)
Installation mounting	4 or 9 mounting bolts with M6 threaded holes to attach the mounting plate or mounting rails
Enclosure attachment	4 welded mounting feet with 11-mm holes (2 slotted and 2 cross-shaped openings)
Lid opening	Can be removed completely, lid opening angle 130 °
Cover attachment	Quarter-turn lock with slotted insert (other inserts available on request)
Impact resistance	7 J ATEX applications, 10 J industrial applications
Gasket material	Silicone
Operating temperature range	-60 °C...+135 °C
Lid screws, torque*	2.5 Nm
Note	* For screwing on the cover, we recommend our hexagon 10 mm socket wrench (9009070000) ** Painted steel enclosures are available on request.

Approvals for empty enclosures

ATEX certificate	KEMA 10ATEX0047 U
ATEX marking	II 2 G Ex e IIC Gb II 2 D Ex tb IIIC Db IP66
IECEx certificate	IECEx KEM 10.0016U
IECEx marking	Ex e IIC Gb Ex tb IIIC Db IP66
GOST Ex	POCC DE.ME92.B02036
cULus	E243298
Germanischer Lloyd	11534 - 10 HH
Russian Maritime Register	10.04095.250
INMETRO	In preparation
Note	The Klippon® TB QL enclosure range can be pre-fitted in our customer specific production department according to your wishes; as an example, terminals, or other approved components, can be installed as required.

Approvals for control and distribution box

ATEX certificate	KEMA 10ATEX0051
ATEX marking	II 2 G Ex eb IIC T6...T4 II 1 G Ex ia IIC T6...T4 II 2(1) G Ex eb ia IIC T6...T4 II 2 D Ex tb IIIC T85 °C...T135 °C IP66
IECEx certificate	IECEx KEM 10.0020
IECEx marking	Ex eb IIC T... Ex ia IIC T... Ex eb ia IIC T... Ex tb IIIC T85 °C...T135 °C IP66
Note	Labelling depends on the application layout.

Integrate, expand and customise: the perfect supplement to every application

The fully structured range of system accessories for the Klippon® TB enclosure range allows you to easily adapt the enclosure to meet the specific requirements of every application.

The following options are available:

1 Document holder

Document holders for storage of important documents in the enclosure.

2 Earthing studs

Earthing studs are replaceable. Available in two versions – brass and stainless steel.

3 Gland plates

Gland plates are available as spares and also in various material thicknesses.

4 Mounting plates

Mounting plates with and without a drilling pattern, for horizontal and vertical mounting of rails, or components fitted directly.

5 Mounting hardware kits

Mounting hardware kits are available for quick and easy installation of label holders, mounting plates, gland plates, document holders and rain hoods.

6 Door stay

A door stay prevent the door from being closed unintentionally, regardless of the mounting position of the enclosure.
This item is **only** available Ex-works.

7 Locking systems

Various locking systems are available for the safe securing of the enclosure. There are padlocks for the Klippon® TB MH enclosures and a range of lock inserts for the Klippon® TB QL enclosures.

8 Type label holder

A range of label holders are available for product identification.

9 Rain hoods

The rain hood provides an ideal, additional level of protection for the enclosure. Particularly useful against heavy rainfall or extreme levels of direct sunlight.

Klippon® TB QL 221513

Depth 133 mm

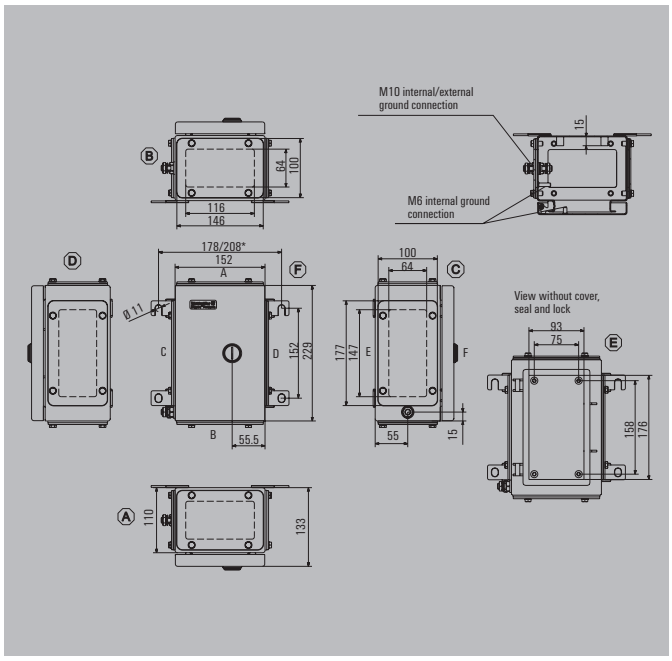

Height/Width/Depth	229 / 152 / 133 mm

Ordering data

Stainless steel 1.4404 316L, electropolished	Order No.
1 gland plate - bottom	1199860000
2 gland plates - top and bottom sides (A & B)	1199870000
3 gland plates - bottom, left and right sides (B, C & D)	1199880000
4 gland plates - top, bottom, left and right sides (A, B, C & D)	1199890000
Note Painted sheet steel enclosure available on request. Standard colour is similar to RAL 7035.	

Accessories

Mounting plates and fastening screws	Order No.
Steel sheet, zinc plated	1193930000
Stainless steel 1.4301	1193810000
With hole pattern, natural stainless steel 1.4301	1257650000
Fastening screws for mounting plates	0642600000
Fastening screws for terminal rails	1274150000
Stainless steel spacer M6 x 8, Set of 4	
10 mm length	0935110000
15 mm length	0935120000
20 mm length	0935130000
30 mm length	0935140000
Gland plates and screws - 6 mm	
Top and bottom sides (A & B), electropolished stainless steel 1.4404	1256270000
Left and right sides (C & D), electropolished stainless steel 1.4404	1256280000
Mounting screw, stainless steel 1.4404	1253230000
Mirror-polish Stainless steel 1.4301 rain hood (2R)	
	1281360000
Label holder	
70 x 70 angled stainless steel 1.4301	1279320000
130x50 stainless steel 1.4301	1283450000
100x25 stainless steel 1.4301	1257640000
Document holder	
For DIN A6 size documents	
For DIN A5 size documents	
For DIN A4 size documents	
Set of fixings	
For label holders, rain hoods and document holders (rivet)	1252190000
For plastic (Trafolyte), identification plate (screw)	1285200000
Earthing stud	
Stainless steel 1.4404	1192690000

Note

Max. number of terminals (industry)

Max. number of terminals (industry)	vertical	horizontal
2.5 mm²	1x29	1x15
4 mm²		1x13
6 mm²		1x9
10 mm²		1x7
16 mm²		1x6
35 mm²		

Note

*For enclosure versions with zero, one or two gland plates, the horizontal gap between the mounting feet is reduced by 30 mm.
Assembly with terminal blocks provides for 10 mm clearance to the ends of the mounting rail.
Recommended order:
TS 35 mounting rail (screw terminal) WDU 2.5 1020000000 / (tension clamp terminal) ZDU 2.5 1608510000 / (tension clamp terminal) PDU 2.5 1896110000
TS 32 mounting rail (screw terminal) SAK 2.5 0279660000
TS 15 mounting rail (screw terminal) AKZ 2.5 0697160000

Number of cable entries

Number of cable entries	A / B	C / D
M12	6	8
M16	5	6
M20	2	3
M25	2	2
M32	1	2
M40	1	2
M50	0	0
M63	0	0
M75	0	0

Note Our IP 68 brass cable glands serve as a reference for these recommended values.

Dimensions of mounting plate

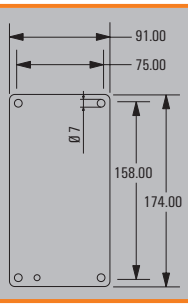

Klippon® TB QL 262615

Depth 150 mm

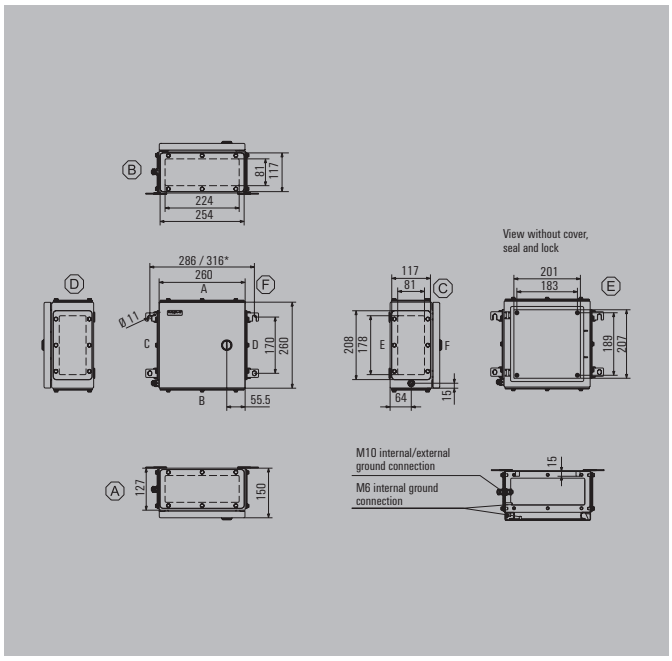

Height/Width/Depth	260 / 260 / 150 mm

Ordering data

Stainless steel 1.4404 316L, electropolished	Order No.
1 gland plate - bottom	1199910000
2 gland plates - top and bottom sides (A & B)	1199920000
3 gland plates - bottom, left and right sides (B, C & D)	1199930000
4 gland plates - top, bottom, left and right sides (A, B, C & D)	1199940000
Note	Painted sheet steel enclosure available on request. Standard colour is similar to RAL 7035.

Accessories

Mounting plates and fastening screws	Order No.
Steel sheet, zinc plated	1193950000
Stainless steel 1.4301	1193820000
With hole pattern, natural stainless steel 1.4301	1257660000
Fastening screws for mounting plates	0642600000
Fastening screws for terminal rails	1274150000
Stainless steel spacer M6 x 8, Set of 4	
10 mm length	0935110000
15 mm length	0935120000
20 mm length	0935130000
30 mm length	0935140000
Gland plates and screws - 6 mm	
Top and bottom sides (A & B), electropolished stainless steel 1.4404	1256290000
Left and right sides (C & D), electropolished stainless steel 1.4404	1256310000
Mounting screw, stainless steel 1.4404	1253230000
Mirror-polish Stainless steel 1.4301 rain hood (2R)	
	1281370000
Label holder	
70 x 70 angled stainless steel 1.4301	1279320000
130x50 stainless steel 1.4301	1283450000
100x25 stainless steel 1.4301	1257640000
Document holder	
For DIN A6 size documents	1252780000
For DIN A5 size documents	
For DIN A4 size documents	
Set of fixings	
For label holders, rain hoods and document holders (rivet)	1252190000
For plastic (Trafolyte), identification plate (screw)	1285200000
Earthing stud	
Stainless steel 1.4404	1192690000

Note

Max. number of terminals (industry)

Max. number of terminals (industry)	vertical	horizontal
2.5 mm²	2x35	2x34
4 mm²	1x30	1x29
6 mm²	1x22	1x22
10 mm²	1x18	1x17
16 mm²	1x15	1x14
35 mm²		

Note

*For enclosure versions with zero, one or two gland plates, the horizontal gap between the mounting feet is reduced by 30 mm.
Assembly with terminal blocks provides for 10 mm clearance to the ends of the mounting rail.
Recommended order:
TS 35 mounting rail (screw terminal) WDU 2.5 1020000000 / (tension clamp terminal) ZDU 2.5 1608510000 / (tension clamp terminal) PDU 2.5 1896110000
TS 32 mounting rail (screw terminal) SAK 2.5 0279660000
TS 15 mounting rail (screw terminal) AKZ 2.5 0697160000

Number of cable entries

Number of cable entries	A / B	C / D
M12	20	15
M16	11	8
M20	9	7
M25	4	3
M32	3	2
M40	3	2
M50	2	2
M63	0	0
M75	0	0

Note Our IP 68 brass cable glands are used as the reference for these guideline values.

Dimensions of mounting plate

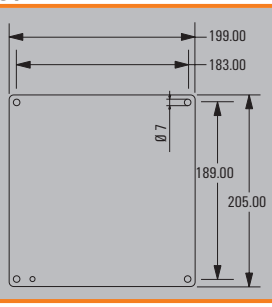

Klippon® TB QL 262620

Depth 200 mm

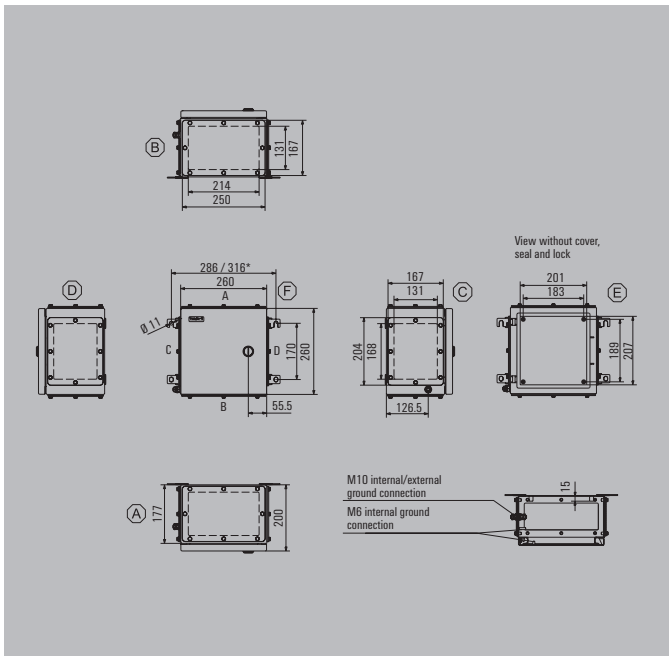

Height/Width/Depth	260 / 260 / 200 mm

Ordering data

Stainless steel 1.4404 316L, electropolished	Order No.
1 gland plate - bottom	1199960000
2 gland plates - top and bottom sides (A & B)	1199970000
3 gland plates - bottom, left and right sides (B, C & D)	1199980000
4 gland plates - top, bottom, left and right sides (A, B, C & D)	1199990000
Note	Painted sheet steel enclosure available on request. Standard colour is similar to RAL 7035.

Accessories

Mounting plates and fastening screws	Order No.
Steel sheet, zinc plated	1193950000
Stainless steel 1.4301	1193820000
With hole pattern, natural stainless steel 1.4301	1257660000
Fastening screws for mounting plates	0642600000
Fastening screws for terminal rails	1274150000
Stainless steel spacer M6 x 8, Set of 4	
10 mm length	0935110000
15 mm length	0935120000
20 mm length	0935130000
30 mm length	0935140000
Gland plates and screws - 6 mm	
Top and bottom sides (A & B), electropolished stainless steel 1.4404	1256320000
Left and right sides (C & D), electropolished stainless steel 1.4404	1256330000
Mounting screw, stainless steel 1.4404	1253230000
Mirror-polish Stainless steel 1.4301 rain hood (2R)	
	1281380000
Label holder	
70 x 70 angled stainless steel 1.4301	1279320000
130x50 stainless steel 1.4301	1283450000
100x25 stainless steel 1.4301	1257640000
Document holder	
For DIN A6 size documents	1252780000
For DIN A5 size documents	
For DIN A4 size documents	
Set of fixings	
For label holders, rain hoods and document holders (rivet)	1252190000
For plastic (Trafolyte), identification plate (screw)	1285200000
Earthing stud	
Stainless steel 1.4404	1192690000

Note

Max. number of terminals (industry)

Max. number of terminals (industry)	vertical	horizontal
2.5 mm²	2x35	2x34
4 mm²	1x30	1x29
6 mm²	1x22	1x22
10 mm²	1x18	1x17
16 mm²	1x15	1x14
35 mm²		

Note

*For enclosure versions with zero, one or two gland plates, the horizontal gap between the mounting feet is reduced by 30 mm.
Assembly with terminal blocks provides for 10 mm clearance to the ends of the mounting rail.
Recommended order:
TS 35 mounting rail (screw terminal) WDU 2.5 1020000000 / (tension clamp terminal) ZDU 2.5 1608510000 / (tension clamp terminal) PDU 2.5 1896110000
TS 32 mounting rail (screw terminal) SAK 2.5 0279660000
TS 15 mounting rail (screw terminal) AKZ 2.5 0697160000

Number of cable entries

Number of cable entries	A / B	C / D
M12	33	25
M16	22	16
M20	14	11
M25	12	9
M32	6	4
M40	5	4
M50	2	2
M63	2	1
M75	1	1

Note Our IP 68 brass cable glands serve as a reference for these recommended values.

Dimensions of mounting plate

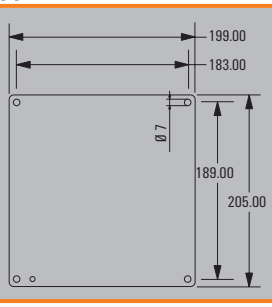

Klippon® TB QL 303015

Depth 150 mm

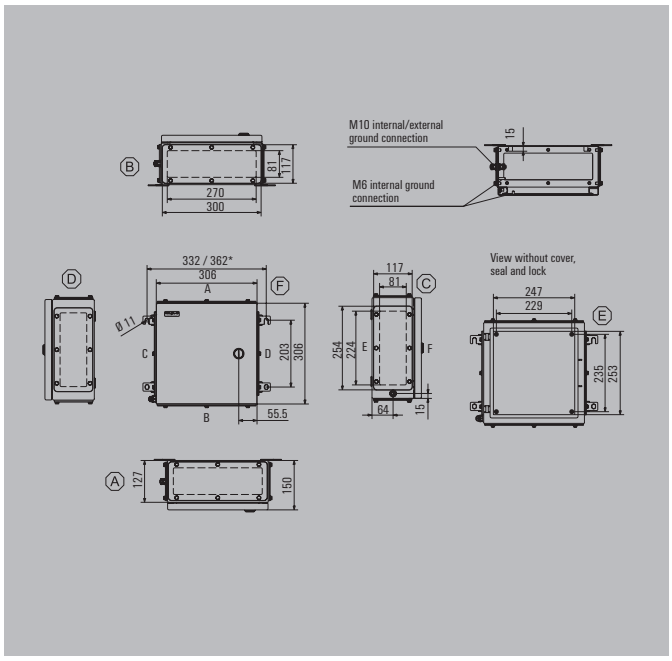

Height/Width/Depth	306 / 306 / 150 mm

Ordering data

Stainless steel 1.4404 316L, electropolished	Order No.
1 gland plate - bottom	1200020000
2 gland plates - top and bottom sides (A & B)	1200030000
3 gland plates - bottom, left and right sides (B, C & D)	1200040000
4 gland plates - top, bottom, left and right sides (A, B, C & D)	1200050000
Note	Painted sheet steel enclosure available on request. Standard colour is similar to RAL 7035.

Accessories

Mounting plates and fastening screws	Order No.
Steel sheet, zinc plated	1193960000
Stainless steel 1.4301	1193830000
With hole pattern, natural stainless steel 1.4301	1257670000
Fastening screws for mounting plates	0642600000
Fastening screws for terminal rails	1274150000
Stainless steel spacer M6 x 8, Set of 4	
10 mm length	0935110000
15 mm length	0935120000
20 mm length	0935130000
30 mm length	0935140000
Gland plates and screws - 6 mm	
Top and bottom sides (A & B), electropolished stainless steel 1.4404	1256340000
Left and right sides (C & D), electropolished stainless steel 1.4404	1256350000
Mounting screw, stainless steel 1.4404	1253230000
Mirror-polish Stainless steel 1.4301 rain hood (2R)	
	1281390000
Label holder	
70 x 70 angled stainless steel 1.4301	1279320000
130x50 stainless steel 1.4301	1283450000
100x25 stainless steel 1.4301	1257640000
Document holder	
For DIN A6 size documents	1252780000
For DIN A5 size documents	
For DIN A4 size documents	
Set of fixings	
For label holders, rain hoods and document holders (rivet)	1252190000
For plastic (Trafolyte), identification plate (screw)	1285200000
Earthing stud	
Stainless steel 1.4404	1192690000

Note

Max. number of terminals (industry)

Max. number of terminals (industry)	vertical	horizontal
2.5 mm²	2x44	2x43
4 mm²	2x37	2x36
6 mm²	2x28	2x27
10 mm²	1x22	1x22
16 mm²	1x19	1x18
35 mm²	1x14	1x13

Note

*For enclosure versions with zero, one or two gland plates, the horizontal gap between the mounting feet is reduced by 30 mm.
Assembly with terminal blocks provides for 10 mm clearance to the ends of the mounting rail.
Recommended order:
TS 35 mounting rail (screw terminal) WDU 2.5 1020000000 / (tension clamp terminal) ZDU 2.5 1608510000 / (tension clamp terminal) PDU 2.5 1896110000
TS 32 mounting rail (screw terminal) SAK 2.5 0279660000
TS 15 mounting rail (screw terminal) AKZ 2.5 0697160000

Number of cable entries

Number of cable entries	A / B	C / D
M12	24	20
M16	13	11
M20	11	9
M25	5	4
M32	4	3
M40	3	3
M50	3	2
M63	0	0
M75	0	0

Note Our IP 68 brass cable glands are used as the reference for these guideline values.

Dimensions of mounting plate

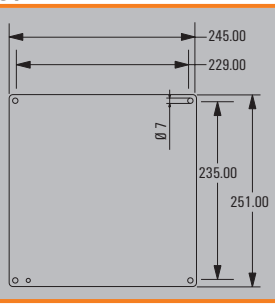

Klippon® TB QL 303020

Depth 200 mm

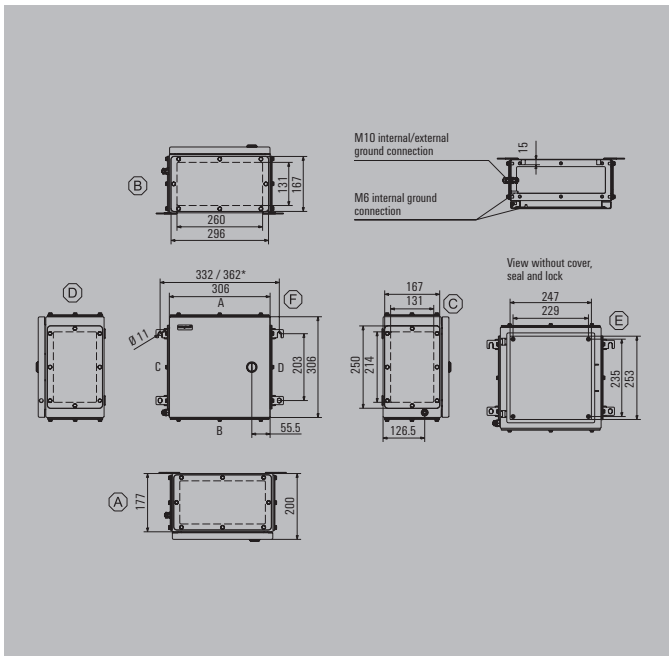

Height/Width/Depth	306 / 306 / 200 mm

Ordering data

Stainless steel 1.4404 316L, electropolished	Order No.
1 gland plate - bottom	1200070000
2 gland plates - top and bottom sides (A & B)	1200080000
3 gland plates - bottom, left and right sides (B, C & D)	1200090000
4 gland plates - top, bottom, left and right sides (A, B, C & D)	1200100000
Note Painted sheet steel enclosure available on request. Standard colour is similar to RAL 7035.	

Accessories

Mounting plates and fastening screws	Order No.
Steel sheet, zinc plated	1193960000
Stainless steel 1.4301	1193830000
With hole pattern, natural stainless steel 1.4301	1257670000
Fastening screws for mounting plates	0642600000
Fastening screws for terminal rails	1274150000
Stainless steel spacer M6 x 8, Set of 4	
10 mm length	0935110000
15 mm length	0935120000
20 mm length	0935130000
30 mm length	0935140000
Gland plates and screws - 6 mm	
Top and bottom sides (A & B), electropolished stainless steel 1.4404	1256360000
Left and right sides (C & D), electropolished stainless steel 1.4404	1256370000
Mounting screw, stainless steel 1.4404	1253230000
Mirror-polish Stainless steel 1.4301 rain hood (2R)	
	1281400000
Label holder	
70 x 70 angled stainless steel 1.4301	1279320000
130x50 stainless steel 1.4301	1283450000
100x25 stainless steel 1.4301	1257640000
Document holder	
For DIN A6 size documents	1252780000
For DIN A5 size documents	
For DIN A4 size documents	
Set of fixings	
For label holders, rain hoods and document holders (rivet)	1252190000
For plastic (Trafolyte), identification plate (screw)	1285200000
Earthing stud	
Stainless steel 1.4404	1192690000

Note

Max. number of terminals (industry)

Max. number of terminals (industry)	vertical	horizontal
2.5 mm²	2x44	2x43
4 mm²	2x37	2x36
6 mm²	2x28	2x27
10 mm²	1x22	1x22
16 mm²	1x19	1x18
35 mm²	1x14	1x13

Note

*For enclosure versions with zero, one or two gland plates, the horizontal gap between the mounting feet is reduced by 30 mm.
Assembly with terminal blocks provides for 10 mm clearance to the ends of the mounting rail.
Recommended order:
TS 35 mounting rail (screw terminal) WDU 2.5 1020000000 / (tension clamp terminal) ZDU 2.5 1608510000 / (tension clamp terminal) PDU 2.5 1896110000
TS 32 mounting rail (screw terminal) SAK 2.5 0279660000
TS 15 mounting rail (screw terminal) AKZ 2.5 0697160000

Number of cable entries

Number of cable entries	A / B	C / D
M12	40	33
M16	26	22
M20	17	14
M25	14	12
M32	8	6
M40	6	5
M50	3	2
M63	2	2
M75	2	1

Note Our IP 68 brass cable glands serve as a reference for these recommended values.

Dimensions of mounting plate

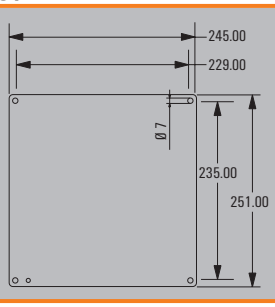

Klippon® TB QL 352615

Depth 150 mm

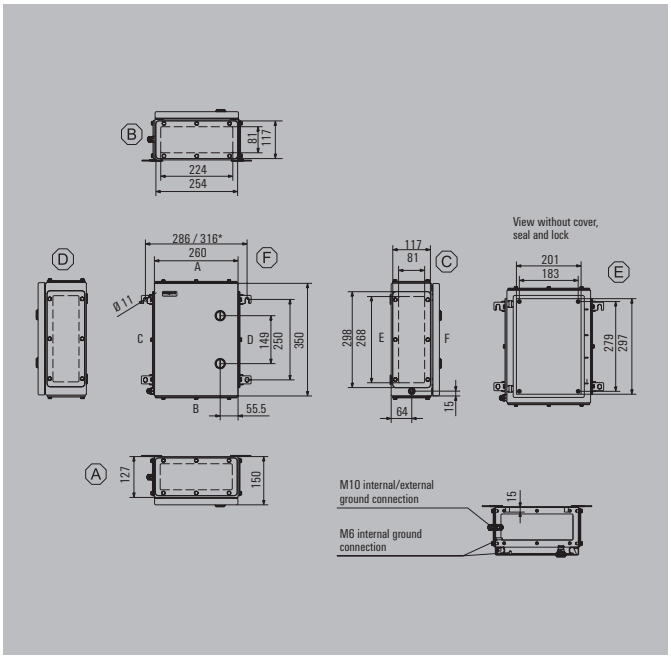

Height/Width/Depth	350 / 260 / 150 mm

Ordering data

Stainless steel 1.4404 316L, electropolished	Order No.
1 gland plate - bottom	1200120000
2 gland plates - top and bottom sides (A & B)	1200130000
3 gland plates - bottom, left and right sides (B, C & D)	1200140000
4 gland plates - top, bottom, left and right sides (A, B, C & D)	1200150000

Note Painted sheet steel enclosure available on request. Standard colour is similar to RAL 7035.

Accessories

Mounting plates and fastening screws	Order No.
Steel sheet, zinc plated	1193970000
Stainless steel 1.4301	1193840000
With hole pattern, natural stainless steel 1.4301	1257680000
Fastening screws for mounting plates	0642600000
Fastening screws for terminal rails	1274150000
Stainless steel spacer M6 x 8, Set of 4	
10 mm length	0935110000
15 mm length	0935120000
20 mm length	0935130000
30 mm length	0935140000
Gland plates and screws - 6 mm	
Top and bottom sides (A & B), electropolished stainless steel 1.4404	1256380000
Left and right sides (C & D), electropolished stainless steel 1.4404	1256390000
Mounting screw, stainless steel 1.4404	1253230000
Mirror-polish Stainless steel 1.4301 rain hood (2R)	
	1281410000
Label holder	
70 x 70 angled stainless steel 1.4301	1279320000
130x50 stainless steel 1.4301	1283450000
100x25 stainless steel 1.4301	1257640000
Document holder	
For DIN A6 size documents	1252780000
For DIN A5 size documents	
For DIN A4 size documents	
Set of fixings	
For label holders, rain hoods and document holders (rivet)	1252190000
For plastic (Trafolyte), identification plate (screw)	1285200000
Earthing stud	
Stainless steel 1.4404	1192690000

Note

Max. number of terminals (industry)

Max. number of terminals (industry)	vertical	horizontal
2.5 mm²	2x53	2x34
4 mm²	1x44	2x29
6 mm²	1x33	2x22
10 mm²	1x27	2x17
16 mm²	1x22	1x14
35 mm²		1x11

Note *For enclosure versions with zero, one or two gland plates, the horizontal gap between the mounting feet is reduced by 30 mm.
Assembly with terminal blocks provides for 10 mm clearance to the ends of the mounting rail.
Recommended order:
TS 35 mounting rail (screw terminal) WDU 2.5 1020000000 / (tension clamp terminal) ZDU 2.5 1608510000 / (tension clamp terminal) PDU 2.5 1896110000
TS 32 mounting rail (screw terminal) SAK 2.5 0279660000
TS 15 mounting rail (screw terminal) AKZ 2.5 0697160000

Number of cable entries

Number of cable entries	A / B	C / D
M12	20	23
M16	11	13
M20	9	11
M25	4	5
M32	3	4
M40	3	3
M50	2	3
M63	0	0
M75	0	0

Note Our IP 68 brass cable glands serve as a reference for these recommended values.

Dimensions of mounting plate

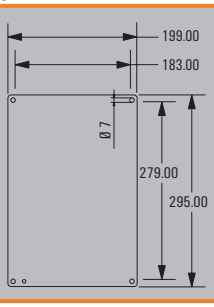

Klippon® TB QL 352620

Depth 200 mm

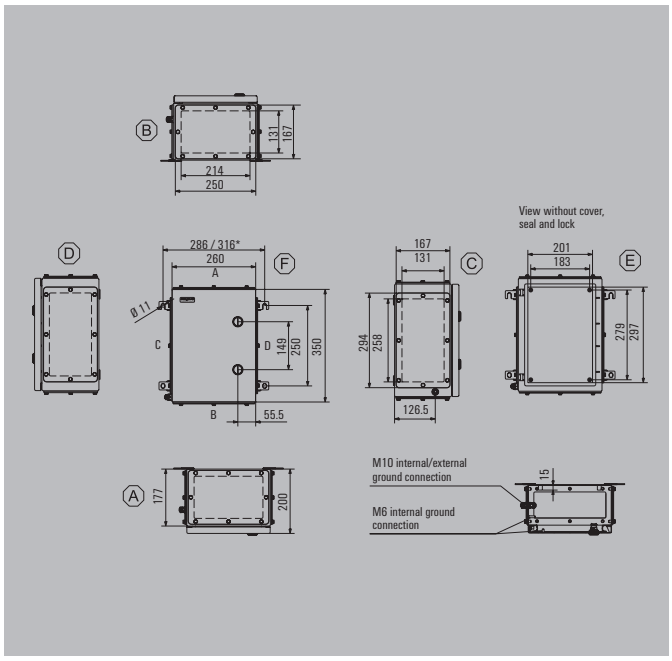

Height/Width/Depth	350 / 260 / 200 mm

Ordering data

Stainless steel 1.4404 316L, electropolished	Order No.
1 gland plate - bottom	1200170000
2 gland plates - top and bottom sides (A & B)	1200180000
3 gland plates - bottom, left and right sides (B, C & D)	1200190000
4 gland plates - top, bottom, left and right sides (A, B, C & D)	1200210000
Note Painted sheet steel enclosure available on request. Standard colour is similar to RAL 7035.	

Accessories

Mounting plates and fastening screws	Order No.
Steel sheet, zinc plated	1193970000
Stainless steel 1.4301	1193840000
With hole pattern, natural stainless steel 1.4301	1257680000
Fastening screws for mounting plates	0642600000
Fastening screws for terminal rails	1274150000
Stainless steel spacer M6 x 8, Set of 4	
10 mm length	0935110000
15 mm length	0935120000
20 mm length	0935130000
30 mm length	0935140000
Gland plates and screws - 6 mm	
Top and bottom sides (A & B), electropolished stainless steel 1.4404	1256410000
Left and right sides (C & D), electropolished stainless steel 1.4404	1256420000
Mounting screw, stainless steel 1.4404	1253230000
Mirror-polish Stainless steel 1.4301 rain hood (2R)	
	1281420000
Label holder	
70 x 70 angled stainless steel 1.4301	1279320000
130x50 stainless steel 1.4301	1283450000
100x25 stainless steel 1.4301	1257640000
Document holder	
For DIN A6 size documents	1252780000
For DIN A5 size documents	
For DIN A4 size documents	
Set of fixings	
For label holders, rain hoods and document holders (rivet)	1252190000
For plastic (Trafolyte), identification plate (screw)	1285200000
Earthing stud	
Stainless steel 1.4404	1192690000

Note

Max. number of terminals (industry)

Max. number of terminals (industry)	vertical	horizontal
2.5 mm²	2x53	2x34
4 mm²	1x44	2x29
6 mm²	1x33	2x22
10 mm²	1x27	2x17
16 mm²	1x22	1x14
35 mm²		1x11

Note *For enclosure versions with zero, one or two gland plates, the horizontal gap between the mounting feet is reduced by 30 mm.
Assembly with terminal blocks provides for 10 mm clearance to the ends of the mounting rail.
Recommended order:
TS 35 mounting rail (screw terminal) WDU 2.5 1020000000 / (tension clamp terminal) ZDU 2.5 1608510000 / (tension clamp terminal) PDU 2.5 1896110000
TS 32 mounting rail (screw terminal) SAK 2.5 0279660000
TS 15 mounting rail (screw terminal) AKZ 2.5 0697160000

Number of cable entries

Number of cable entries	A / B	C / D
M12	33	38
M16	22	26
M20	14	17
M25	12	14
M32	6	7
M40	5	6
M50	2	3
M63	2	2
M75	1	2

Note Our IP 68 brass cable glands are used as the reference for these guideline values.

Dimensions of mounting plate

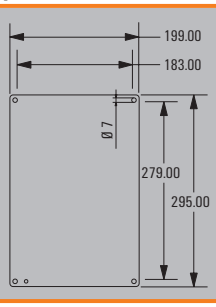

Klippon® TB QL 403015

Depth 150 mm

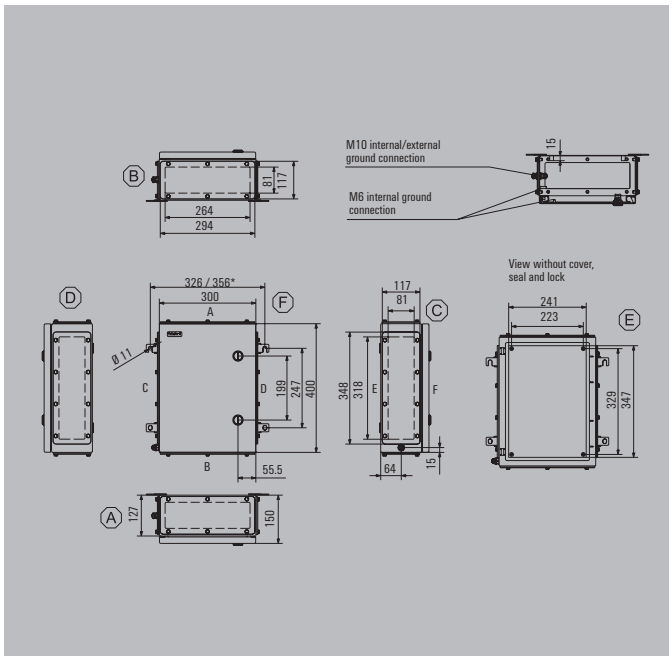

Height/Width/Depth	400 / 300 / 150 mm

Ordering data

Stainless steel 1.4404 316L, electropolished	Order No.
1 gland plate - bottom	1200230000
2 gland plates - top and bottom sides (A & B)	1200240000
3 gland plates - bottom, left and right sides (B, C & D)	1200250000
4 gland plates - top, bottom, left and right sides (A, B, C & D)	1200260000
Note Painted sheet steel enclosure available on request. Standard colour is similar to RAL 7035.	

Accessories

Mounting plates and fastening screws	Order No.
Steel sheet, zinc plated	1193980000
Stainless steel 1.4301	1193850000
With hole pattern, natural stainless steel 1.4301	1257690000
Fastening screws for mounting plates	0642600000
Fastening screws for terminal rails	1274150000
Stainless steel spacer M6 x 8, Set of 4	
10 mm length	0935110000
15 mm length	0935120000
20 mm length	0935130000
30 mm length	0935140000
Gland plates and screws - 6 mm	
Top and bottom sides (A & B), electropolished stainless steel 1.4404	1256430000
Left and right sides (C & D), electropolished stainless steel 1.4404	1256440000
Mounting screw, stainless steel 1.4404	1253230000
Mirror-polish Stainless steel 1.4301 rain hood (2R)	
	1281430000
Label holder	
70 x 70 angled stainless steel 1.4301	1279320000
130x50 stainless steel 1.4301	1283450000
100x25 stainless steel 1.4301	1257640000
Document holder	
For DIN A6 size documents	1252780000
For DIN A5 size documents	
For DIN A4 size documents	
Set of fixings	
For label holders, rain hoods and document holders (rivet)	1252190000
For plastic (Trafolyte), identification plate (screw)	1285200000
Earthing stud	
Stainless steel 1.4404	1192690000

Note

Max. number of terminals (industry)

Max. number of terminals (industry)	vertical	horizontal
2.5 mm²	2x62	3x42
4 mm²	2x52	3x35
6 mm²	1x39	2x26
10 mm²	1x32	2x21
16 mm²	1x26	2x18
35 mm²	1x20	1x13

Note

*For enclosure versions with zero, one or two gland plates, the horizontal gap between the mounting feet is reduced by 30 mm.
Assembly with terminal blocks provides for 10 mm clearance to the ends of the mounting rail.
Recommended order:
TS 35 mounting rail (screw terminal) WDU 2.5 1020000000 / (tension clamp terminal) ZDU 2.5 1608510000 / (tension clamp terminal) PDU 2.5 1896110000
TS 32 mounting rail (screw terminal) SAK 2.5 0279660000
TS 15 mounting rail (screw terminal) AKZ 2.5 0697160000

Number of cable entries

Number of cable entries	A / B	C / D
M12	23	29
M16	13	16
M20	11	13
M25	5	6
M32	4	5
M40	3	4
M50	3	3
M63	0	0
M75	0	0

Note Our IP 68 brass cable glands serve as a reference for these recommended values.

Dimensions of mounting plate

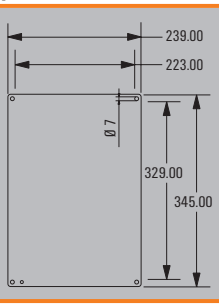

Klippon® TB QL 403020

Depth 200 mm

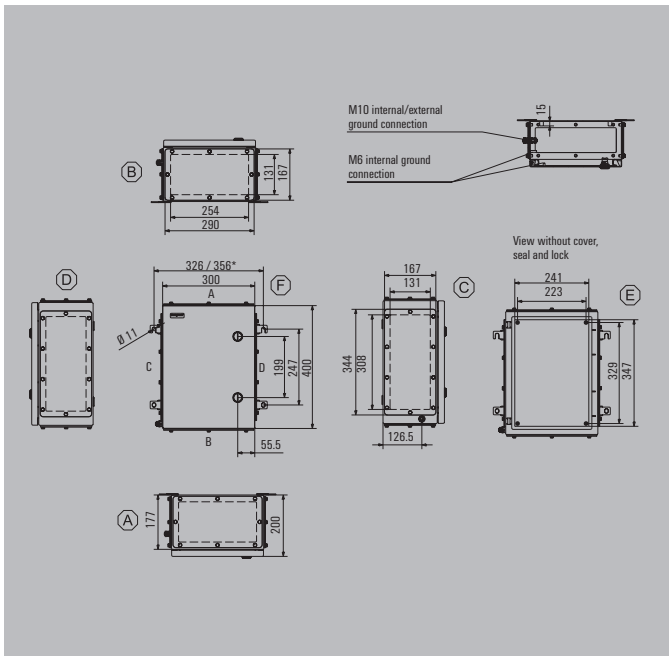

Height/Width/Depth	400 / 300 / 200 mm

Ordering data

Stainless steel 1.4404 316L, electropolished	Order No.
1 gland plate - bottom	1200280000
2 gland plates - top and bottom sides (A & B)	1200290000
3 gland plates - bottom, left and right sides (B, C & D)	1200310000
4 gland plates - top, bottom, left and right sides (A, B, C & D)	1200320000
Note Painted sheet steel enclosure available on request. Standard colour is similar to RAL 7035.	

Accessories

Mounting plates and fastening screws	Order No.
Steel sheet, zinc plated	1193980000
Stainless steel 1.4301	1193850000
With hole pattern, natural stainless steel 1.4301	1257690000
Fastening screws for mounting plates	0642600000
Fastening screws for terminal rails	1274150000
Stainless steel spacer M6 x 8, Set of 4	
10 mm length	0935110000
15 mm length	0935120000
20 mm length	0935130000
30 mm length	0935140000
Gland plates and screws - 6 mm	
Top and bottom sides (A & B), electropolished stainless steel 1.4404	1256450000
Left and right sides (C & D), electropolished stainless steel 1.4404	1256470000
Mounting screw, stainless steel 1.4404	1253230000
Mirror-polish Stainless steel 1.4301 rain hood (2R)	
	1281440000
Label holder	
70 x 70 angled stainless steel 1.4301	1279320000
130x50 stainless steel 1.4301	1283450000
100x25 stainless steel 1.4301	1257640000
Document holder	
For DIN A6 size documents	1252780000
For DIN A5 size documents	
For DIN A4 size documents	
Set of fixings	
For label holders, rain hoods and document holders (rivet)	1252190000
For plastic (Trafolyte), identification plate (screw)	1285200000
Earthing stud	
Stainless steel 1.4404	1192690000

Note

Max. number of terminals (industry)

Max. number of terminals (industry)	vertical	horizontal
2.5 mm²	2x62	3x42
4 mm²	2x52	3x35
6 mm²	1x39	2x26
10 mm²	1x32	2x21
16 mm²	1x26	2x18
35 mm²	1x20	1x13

Note

*For enclosure versions with zero, one or two gland plates, the horizontal gap between the mounting feet is reduced by 30 mm.
Assembly with terminal blocks provides for 10 mm clearance to the ends of the mounting rail.
Recommended order:
TS 35 mounting rail (screw terminal) WDU 2.5 1020000000 / (tension clamp terminal) ZDU 2.5 1608510000 / (tension clamp terminal) PDU 2.5 1896110000
TS 32 mounting rail (screw terminal) SAK 2.5 0279660000
TS 15 mounting rail (screw terminal) AKZ 2.5 0697160000

Number of cable entries

Number of cable entries	A / B	C / D
M12	38	48
M16	26	32
M20	17	20
M25	14	17
M32	7	9
M40	6	7
M50	3	3
M63	2	3
M75	2	2

Note Our IP 68 brass cable glands are used as the reference for these guideline values.

Dimensions of mounting plate

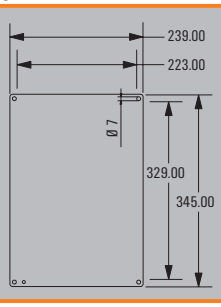

Klippon® TB QL 453815

Depth 150 mm

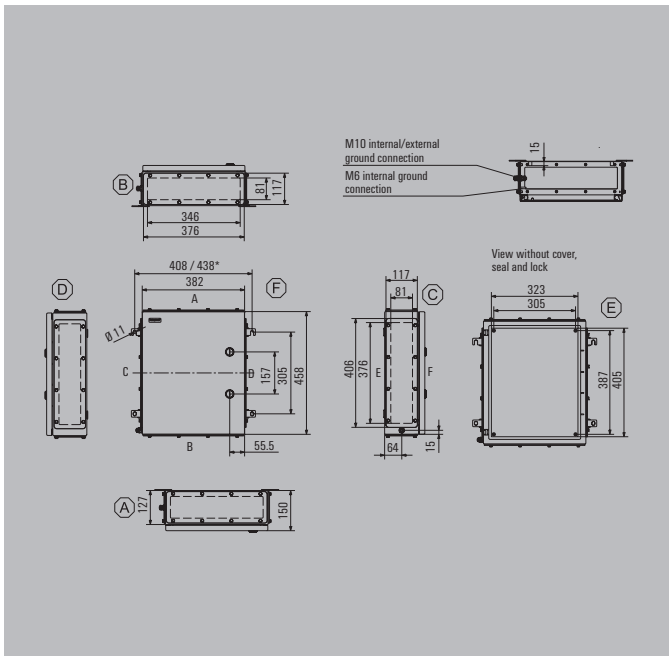

Height/Width/Depth	458 / 382 / 150 mm

Ordering data

Stainless steel 1.4404 316L, electropolished	Order No.
1 gland plate - bottom	1200340000
2 gland plates - top and bottom sides (A & B)	1200350000
3 gland plates - bottom, left and right sides (B, C & D)	1200360000
4 gland plates - top, bottom, left and right sides (A, B, C & D)	1200370000
Note Painted sheet steel enclosure available on request. Standard colour is similar to RAL 7035.	

Accessories

Mounting plates and fastening screws	Order No.
Steel sheet, zinc plated	1193990000
Stainless steel 1.4301	1193860000
With hole pattern, natural stainless steel 1.4301	1257700000
Fastening screws for mounting plates	0642600000
Fastening screws for terminal rails	1274150000
Stainless steel spacer M6 x 8, Set of 4	
10 mm length	0935110000
15 mm length	0935120000
20 mm length	0935130000
30 mm length	0935140000
Gland plates and screws - 6 mm	
Top and bottom sides (A & B), electropolished stainless steel 1.4404	1256480000
Left and right sides (C & D), electropolished stainless steel 1.4404	1256490000
Mounting screw, stainless steel 1.4404	1253230000
Mirror-polish Stainless steel 1.4301 rain hood (2R)	
	1281450000
Label holder	
70 x 70 angled stainless steel 1.4301	1279320000
130x50 stainless steel 1.4301	1283450000
100x25 stainless steel 1.4301	1257640000
Document holder	
For DIN A6 size documents	1252780000
For DIN A5 size documents	1252750000
For DIN A4 size documents	1252730000
Set of fixings	
For label holders, rain hoods and document holders (rivet)	1252190000
For plastic (Trafolyte), identification plate (screw)	1285200000
Earthing stud	
Stainless steel 1.4404	1192690000

Note

Max. number of terminals (industry)

Max. number of terminals (industry)	vertical	horizontal
2.5 mm²	3x73	4x58
4 mm²	2x62	3x48
6 mm²	2x46	3x36
10 mm²	2x37	2x29
16 mm²	2x31	2x24
35 mm²	1x23	1x18

Note

*For enclosure versions with zero, one or two gland plates, the horizontal gap between the mounting feet is reduced by 30 mm.
Assembly with terminal blocks provides for 10 mm clearance to the ends of the mounting rail.
Recommended order:
TS 35 mounting rail (screw terminal) WDU 2.5 1020000000 / (tension clamp terminal) ZDU 2.5 1608510000 / (tension clamp terminal) PDU 2.5 1896110000
TS 32 mounting rail (screw terminal) SAK 2.5 0279660000
TS 15 mounting rail (screw terminal) AKZ 2.5 0697160000

Number of cable entries

Number of cable entries	A / B	C / D
M12	30	33
M16	17	19
M20	15	16
M25	6	7
M32	5	6
M40	4	5
M50	4	4
M63	0	0
M75	0	0

Note Our IP 68 brass cable glands serve as a reference for these recommended values.

Dimensions of mounting plate

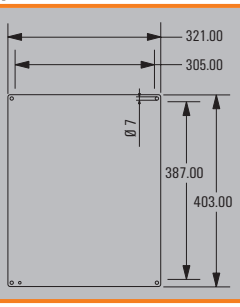

Klippon® TB QL 453820

Depth 200 mm

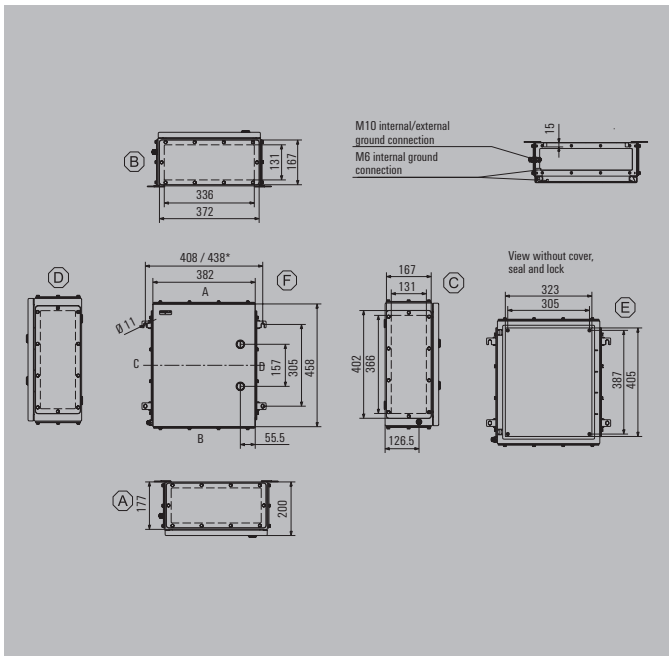

Height/Width/Depth	458 / 382 / 200 mm

Ordering data

Stainless steel 1.4404 316L, electropolished	Order No.
1 gland plate - bottom	1200390000
2 gland plates - top and bottom sides (A & B)	1200410000
3 gland plates - bottom, left and right sides (B, C & D)	1200420000
4 gland plates - top, bottom, left and right sides (A, B, C & D)	1200430000
Note Painted sheet steel enclosure available on request. Standard colour is similar to RAL 7035.	

Accessories

Mounting plates and fastening screws	Order No.
Steel sheet, zinc plated	1193990000
Stainless steel 1.4301	1193860000
With hole pattern, natural stainless steel 1.4301	1257700000
Fastening screws for mounting plates	0642600000
Fastening screws for terminal rails	1274150000
Stainless steel spacer M6 x 8, Set of 4	
10 mm length	0935110000
15 mm length	0935120000
20 mm length	0935130000
30 mm length	0935140000
Gland plates and screws - 6 mm	
Top and bottom sides (A & B), electropolished stainless steel 1.4404	1256510000
Left and right sides (C & D), electropolished stainless steel 1.4404	1256520000
Mounting screw, stainless steel 1.4404	1253230000
Mirror-polish Stainless steel 1.4301 rain hood (2R)	
	1281460000
Label holder	
70 x 70 angled stainless steel 1.4301	1279320000
130x50 stainless steel 1.4301	1283450000
100x25 stainless steel 1.4301	1257640000
Document holder	
For DIN A6 size documents	1252780000
For DIN A5 size documents	1252750000
For DIN A4 size documents	1252730000
Set of fixings	
For label holders, rain hoods and document holders (rivet)	1252190000
For plastic (Trafolyte), identification plate (screw)	1285200000
Earthing stud	
Stainless steel 1.4404	1192690000

Note

Max. number of terminals (industry)

Max. number of terminals (industry)	vertical	horizontal
2.5 mm²	3x73	4x58
4 mm²	2x62	3x48
6 mm²	2x46	3x36
10 mm²	2x37	2x29
16 mm²	2x31	2x24
35 mm²	1x23	1x18

Note

*For enclosure versions with zero, one or two gland plates, the horizontal gap between the mounting feet is reduced by 30 mm.
Assembly with terminal blocks provides for 10 mm clearance to the ends of the mounting rail.
Recommended order:
TS 35 mounting rail (screw terminal) WDU 2.5 1020000000 / (tension clamp terminal) ZDU 2.5 1608510000 / (tension clamp terminal) PDU 2.5 1896110000
TS 32 mounting rail (screw terminal) SAK 2.5 0279660000
TS 15 mounting rail (screw terminal) AKZ 2.5 0697160000

Number of cable entries

Number of cable entries	A / B	C / D
M12	50	55
M16	34	38
M20	23	24
M25	18	21
M32	10	11
M40	8	9
M50	4	4
M63	3	3
M75	2	3

Note Our IP 68 brass cable glands are used as the reference for these guideline values.

Dimensions of mounting plate

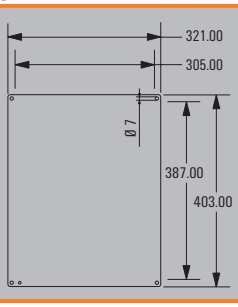

Klippon® TB QL 484815

Depth 150 mm

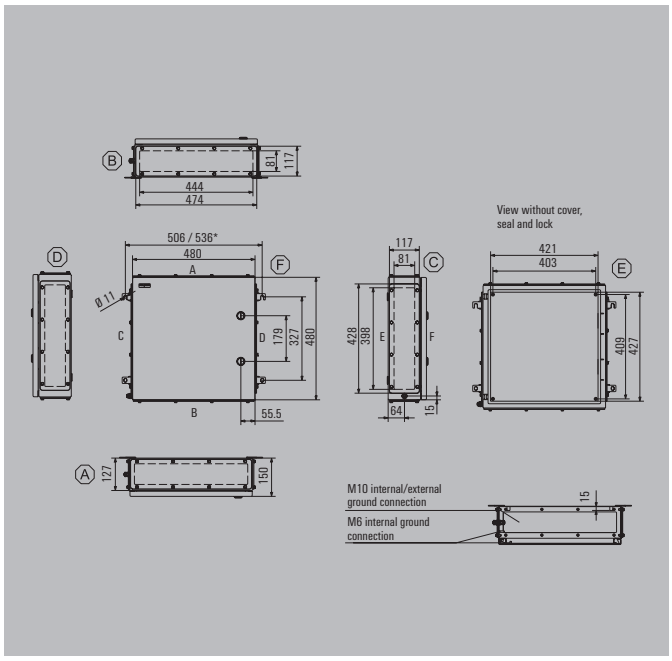

Height/Width/Depth	480 / 480 / 150 mm

Ordering data

Stainless steel 1.4404 316L, electropolished	Order No.
1 gland plate - bottom	1200450000
2 gland plates - top and bottom sides (A & B)	1200460000
3 gland plates - bottom, left and right sides (B, C & D)	1200470000
4 gland plates - top, bottom, left and right sides (A, B, C & D)	1200480000
Note Painted sheet steel enclosure available on request. Standard colour is similar to RAL 7035.	

Max. number of terminals (industry)

Max. number of terminals (industry)	vertical	horizontal
2.5 mm²	4x78	4x77
4 mm²	3x65	3x64
6 mm²	3x49	3x48
10 mm²	2x39	3x39
16 mm²	2x33	2x32
35 mm²	1x25	2x24

Note *For enclosure versions with zero, one or two gland plates, the horizontal gap between the mounting feet is reduced by 30 mm.
Assembly with terminal blocks provides for 10 mm clearance to the ends of the mounting rail.
Recommended order:
TS 35 mounting rail (screw terminal) WDU 2.5 1020000000 / (tension clamp terminal) ZDU 2.5 1608510000 / (tension clamp terminal) PDU 2.5 1896110000
TS 32 mounting rail (screw terminal) SAK 2.5 0279660000
TS 15 mounting rail (screw terminal) AKZ 2.5 0697160000

Accessories

Mounting plates and fastening screws	Order No.
Steel sheet, zinc plated	1194000000
Stainless steel 1.4301	1193870000
With hole pattern, natural stainless steel 1.4301	1257710000
Fastening screws for mounting plates	0642600000
Fastening screws for terminal rails	1274150000
Stainless steel spacer M6 x 8, Set of 4	
10 mm length	0935110000
15 mm length	0935120000
20 mm length	0935130000
30 mm length	0935140000
Gland plates and screws - 6 mm	
Top and bottom sides (A & B), electropolished stainless steel 1.4404	1256530000
Left and right sides (C & D), electropolished stainless steel 1.4404	1256540000
Mounting screw, stainless steel 1.4404	1253230000
Mirror-polish Stainless steel 1.4301 rain hood (2R)	
	1281470000
Label holder	
70 x 70 angled stainless steel 1.4301	1279320000
130x50 stainless steel 1.4301	1283450000
100x25 stainless steel 1.4301	1257640000
Document holder	
For DIN A6 size documents	1252780000
For DIN A5 size documents	1252750000
For DIN A4 size documents	1252730000
Set of fixings	
For label holders, rain hoods and document holders (rivet)	1252190000
For plastic (Trafolyte), identification plate (screw)	1285200000
Earthing stud	
Stainless steel 1.4404	1192690000

Note

Number of cable entries

Number of cable entries	A / B	C / D
M12	39	36
M16	22	20
M20	19	17
M25	8	7
M32	7	6
M40	6	5
M50	5	4
M63	0	0
M75	0	0

Note Our IP 68 brass cable glands are used as the reference for these guideline values.

Dimensions of mounting plate

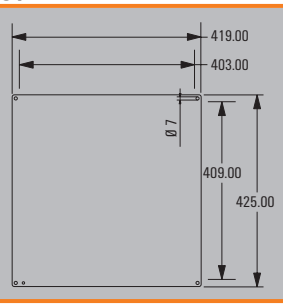

Klippon® TB QL 484820

Depth 200 mm

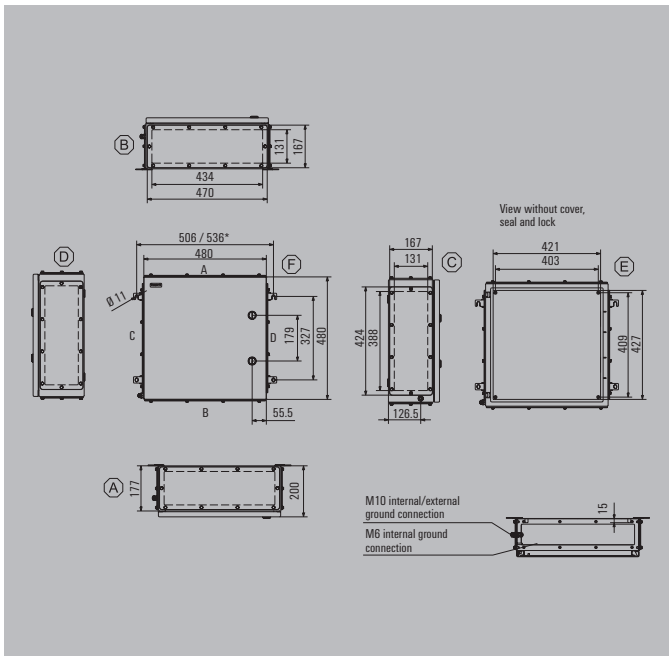

Height/Width/Depth	480 / 480 / 200 mm

Ordering data

Stainless steel 1.4404 316L, electropolished	Order No.
1 gland plate - bottom	1200510000
2 gland plates - top and bottom sides (A & B)	1200520000
3 gland plates - bottom, left and right sides (B, C & D)	1200530000
4 gland plates - top, bottom, left and right sides (A, B, C & D)	1200540000
Note Painted sheet steel enclosure available on request. Standard colour is similar to RAL 7035.	

Accessories

Mounting plates and fastening screws	Order No.
Steel sheet, zinc plated	1194000000
Stainless steel 1.4301	1193870000
With hole pattern, natural stainless steel 1.4301	1257710000
Fastening screws for mounting plates	0642600000
Fastening screws for terminal rails	1274150000
Stainless steel spacer M6 x 8, Set of 4	
10 mm length	0935110000
15 mm length	0935120000
20 mm length	0935130000
30 mm length	0935140000
Gland plates and screws - 6 mm	
Top and bottom sides (A & B), electropolished stainless steel 1.4404	1256550000
Left and right sides (C & D), electropolished stainless steel 1.4404	1256560000
Mounting screw, stainless steel 1.4404	1253230000
Mirror-polish Stainless steel 1.4301 rain hood (2R)	
	1281480000
Label holder	
70 x 70 angled stainless steel 1.4301	1279320000
130x50 stainless steel 1.4301	1283450000
100x25 stainless steel 1.4301	1257640000
Document holder	
For DIN A6 size documents	1252780000
For DIN A5 size documents	1252750000
For DIN A4 size documents	1252730000
Set of fixings	
For label holders, rain hoods and document holders (rivet)	1252190000
For plastic (Trafolyte), identification plate (screw)	1285200000
Earthing stud	
Stainless steel 1.4404	1192690000

Note

Max. number of terminals (industry)

Max. number of terminals (industry)	vertical	horizontal
2.5 mm²	4x78	4x77
4 mm²	3x65	3x64
6 mm²	3x49	3x48
10 mm²	2x39	3x39
16 mm²	2x33	2x32
35 mm²	1x25	2x24

Note *For enclosure versions with zero, one or two gland plates, the horizontal gap between the mounting feet is reduced by 30 mm.
Assembly with terminal blocks provides for 10 mm clearance to the ends of the mounting rail.
Recommended order:
TS 35 mounting rail (screw terminal) WDU 2.5 1020000000 / (tension clamp terminal) ZDU 2.5 1608510000 / (tension clamp terminal) PDU 2.5 1896110000
TS 32 mounting rail (screw terminal) SAK 2.5 0279660000
TS 15 mounting rail (screw terminal) AKZ 2.5 0697160000

Number of cable entries

Number of cable entries	A / B	C / D
M12	65	60
M16	44	40
M20	29	26
M25	24	21
M32	13	12
M40	11	10
M50	5	4
M63	4	4
M75	3	3

Note Our IP 68 brass cable glands serve as a reference for these recommended values.

Dimensions of mounting plate

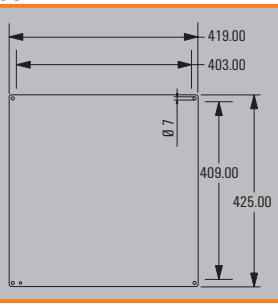

Klippon® TB QL 553515

Depth 150 mm

Height/Width/Depth	550 / 350 / 150 mm

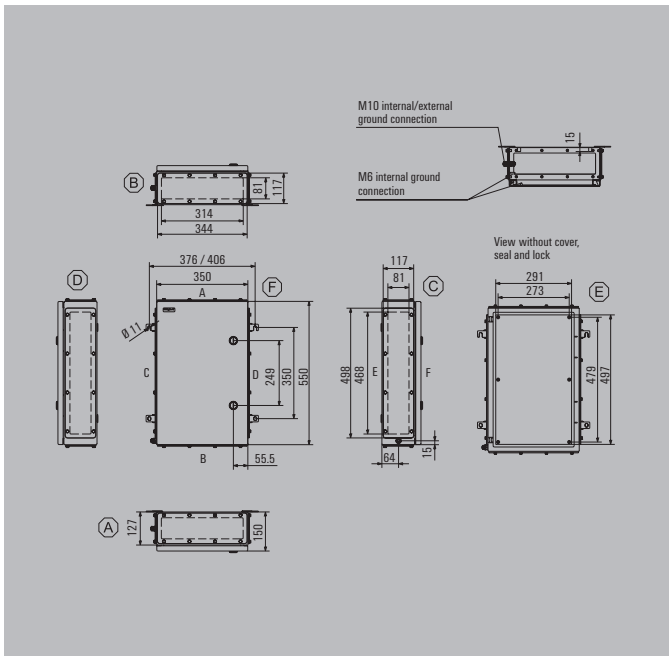

Ordering data

Stainless steel 1.4404 316L, electropolished	Order No.
1 gland plate - bottom	1200560000
2 gland plates - top and bottom sides (A & B)	1200570000
3 gland plates - bottom, left and right sides (B, C & D)	1200580000
4 gland plates - top, bottom, left and right sides (A, B, C & D)	1200590000
Note	Painted sheet steel enclosure available on request. Standard colour is similar to RAL 7035.

Accessories

Mounting plates and fastening screws	Order No.
Steel sheet, zinc plated	1194010000
Stainless steel 1.4301	1193880000
With hole pattern, natural stainless steel 1.4301	1257720000
Fastening screws for mounting plates	0642600000
Fastening screws for terminal rails	1274150000
Stainless steel spacer M6 x 8, Set of 4	
10 mm length	0935110000
15 mm length	0935120000
20 mm length	0935130000
30 mm length	0935140000
Gland plates and screws - 6 mm	
Top and bottom sides (A & B), electropolished stainless steel 1.4404	1256570000
Left and right sides (C & D), electropolished stainless steel 1.4404	1256580000
Mounting screw, stainless steel 1.4404	1253230000
Mirror-polish Stainless steel 1.4301 rain hood (2R)	
	1281490000
Label holder	
70 x 70 angled stainless steel 1.4301	1279320000
130x50 stainless steel 1.4301	1283450000
100x25 stainless steel 1.4301	1257640000
Document holder	
For DIN A6 size documents	1252780000
For DIN A5 size documents	1252750000
For DIN A4 size documents	
Set of fixings	
For label holders, rain hoods and document holders (rivet)	1252190000
For plastic (Trafolyte), identification plate (screw)	1285200000
Earthing stud	
Stainless steel 1.4404	1192690000

Note

Max. number of terminals (industry)

Max. number of terminals (industry)	vertical	horizontal
2.5 mm²	2x91	4x52
4 mm²	2x76	4x43
6 mm²	2x58	4x32
10 mm²	2x46	3x26
16 mm²	1x39	3x22
35 mm²	1x29	2x16

Note

*For enclosure versions with zero, one or two gland plates, the horizontal gap between the mounting feet is reduced by 30 mm.
Assembly with terminal blocks provides for 10 mm clearance to the ends of the mounting rail.
Recommended order:
TS 35 mounting rail (screw terminal) WDU 2.5 1020000000 / (tension clamp terminal) ZDU 2.5 1608510000 / (tension clamp terminal) PDU 2.5 1896110000
TS 32 mounting rail (screw terminal) SAK 2.5 0279660000
TS 15 mounting rail (screw terminal) AKZ 2.5 0697160000

Number of cable entries

Number of cable entries	A / B	C / D
M12	27	42
M16	15	24
M20	13	20
M25	6	9
M32	5	7
M40	4	6
M50	3	5
M63	0	0
M75	0	0

Note Our IP 68 brass cable glands are used as the reference for these guideline values.

Dimensions of mounting plate

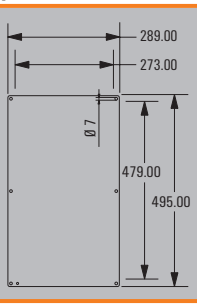

Klippon® TB QL 553520

Depth 200 mm

Height/Width/Depth	550 / 350 / 200 mm

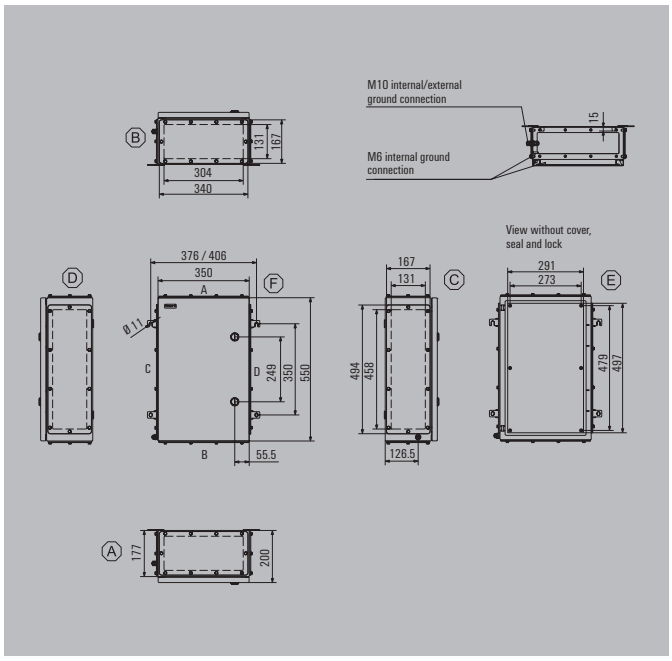

Ordering data

Stainless steel 1.4404 316L, electropolished	Order No.
1 gland plate - bottom	1200620000
2 gland plates - top and bottom sides (A & B)	1200630000
3 gland plates - bottom, left and right sides (B, C & D)	1200640000
4 gland plates - top, bottom, left and right sides (A, B, C & D)	1200650000
Note	Painted sheet steel enclosure available on request. Standard colour is similar to RAL 7035.

Accessories

Mounting plates and fastening screws	Order No.
Steel sheet, zinc plated	1194010000
Stainless steel 1.4301	1193880000
With hole pattern, natural stainless steel 1.4301	1257720000
Fastening screws for mounting plates	0642600000
Fastening screws for terminal rails	1274150000
Stainless steel spacer M6 x 8, Set of 4	
10 mm length	0935110000
15 mm length	0935120000
20 mm length	0935130000
30 mm length	0935140000
Gland plates and screws - 6 mm	
Top and bottom sides (A & B), electropolished stainless steel 1.4404	1256590000
Left and right sides (C & D), electropolished stainless steel 1.4404	1256610000
Mounting screw, stainless steel 1.4404	1253230000
Mirror-polish Stainless steel 1.4301 rain hood (2R)	
	1281500000
Label holder	
70 x 70 angled stainless steel 1.4301	1279320000
130x50 stainless steel 1.4301	1283450000
100x25 stainless steel 1.4301	1257640000
Document holder	
For DIN A6 size documents	1252780000
For DIN A5 size documents	1252750000
For DIN A4 size documents	
Set of fixings	
For label holders, rain hoods and document holders (rivet)	1252190000
For plastic (Trafolyte), identification plate (screw)	1285200000
Earthing stud	
Stainless steel 1.4404	1192690000

Note

Max. number of terminals (industry)

Max. number of terminals (industry)	vertical	horizontal
2.5 mm²	2x91	4x52
4 mm²	2x76	4x43
6 mm²	2x58	4x32
10 mm²	2x46	3x26
16 mm²	1x39	3x22
35 mm²	1x29	2x16

Note

*For enclosure versions with zero, one or two gland plates, the horizontal gap between the mounting feet is reduced by 30 mm.
Assembly with terminal blocks provides for 10 mm clearance to the ends of the mounting rail.
Recommended order:
TS 35 mounting rail (screw terminal) WDU 2.5 1020000000 / (tension clamp terminal) ZDU 2.5 1608510000 / (tension clamp terminal) PDU 2.5 1896110000
TS 32 mounting rail (screw terminal) SAK 2.5 0279660000
TS 15 mounting rail (screw terminal) AKZ 2.5 0697160000

Number of cable entries

Number of cable entries	A / B	C / D
M12	45	70
M16	30	48
M20	20	30
M25	17	26
M32	9	14
M40	7	12
M50	3	5
M63	3	4
M75	2	3

Note Our IP 68 brass cable glands serve as a reference for these recommended values.

Dimensions of mounting plate

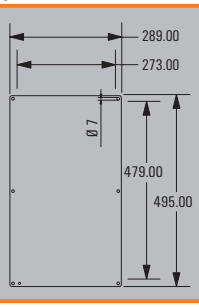

Klippon® TB QL 624515

Depth 150 mm

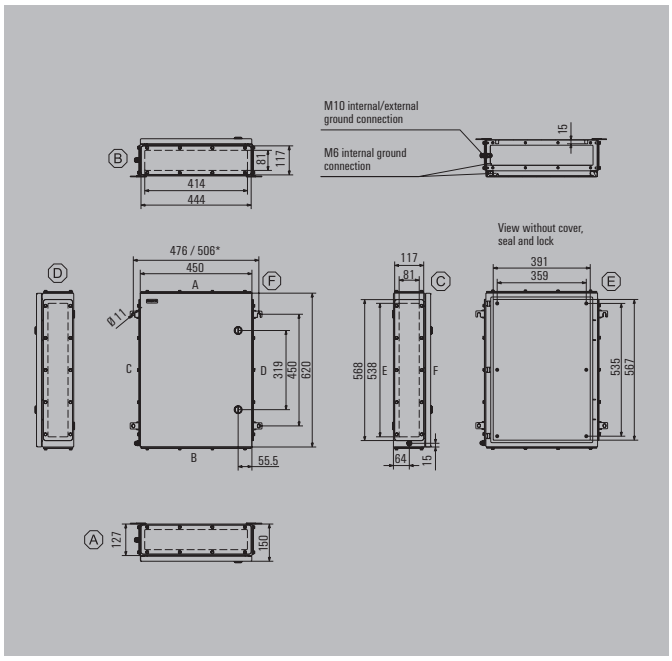

Height/Width/Depth	620 / 450 / 150 mm

Ordering data

Stainless steel 1.4404 316L, electropolished	Order No.
1 gland plate - bottom	1200670000
2 gland plates - top and bottom sides (A & B)	1200680000
3 gland plates - bottom, left and right sides (B, C & D)	1200690000
4 gland plates - top, bottom, left and right sides (A, B, C & D)	1200710000
Note	Painted sheet steel enclosure available on request. Standard colour is similar to RAL 7035.

Accessories

Mounting plates and fastening screws	Order No.
Steel sheet, zinc plated	1194020000
Stainless steel 1.4301	1193890000
With hole pattern, natural stainless steel 1.4301	1257740000
Fastening screws for mounting plates	0642600000
Fastening screws for terminal rails	1274150000
Stainless steel spacer M6 x 8, Set of 4	
10 mm length	0935110000
15 mm length	0935120000
20 mm length	0935130000
30 mm length	0935140000
Gland plates and screws - 6 mm	
Top and bottom sides (A & B), electropolished stainless steel 1.4404	1256620000
Left and right sides (C & D), electropolished stainless steel 1.4404	1256630000
Mounting screw, stainless steel 1.4404	1253230000
Mirror-polish Stainless steel 1.4301 rain hood (2R)	
	1281510000
Label holder	
70 x 70 angled stainless steel 1.4301	1279320000
130x50 stainless steel 1.4301	1283450000
100x25 stainless steel 1.4301	1257640000
Document holder	
For DIN A6 size documents	1252780000
For DIN A5 size documents	1252750000
For DIN A4 size documents	1252730000
Set of fixings	
For label holders, rain hoods and document holders (rivet)	1252190000
For plastic (Trafolyte), identification plate (screw)	1285200000
Earthing stud	
Stainless steel 1.4404	1192690000

Note

Max. number of terminals (industry)

Max. number of terminals (industry)	vertical	horizontal
2.5 mm²	3x105	5x71
4 mm²	3x88	5x59
6 mm²	3x66	4x45
10 mm²	2x53	4x36
16 mm²	2x44	3x30
35 mm²	1x33	2x22

Note

*For enclosure versions with zero, one or two gland plates, the horizontal gap between the mounting feet is reduced by 30 mm.
Assembly with terminal blocks provides for 10 mm clearance to the ends of the mounting rail.
Recommended order:
TS 35 mounting rail (screw terminal) WDU 2.5 1020000000 / (tension clamp terminal) ZDU 2.5 1608510000 / (tension clamp terminal) PDU 2.5 1896110000
TS 32 mounting rail (screw terminal) SAK 2.5 0279660000
TS 15 mounting rail (screw terminal) AKZ 2.5 0697160000

Number of cable entries

Number of cable entries	A / B	C / D
M12	38	48
M16	21	27
M20	18	24
M25	8	10
M32	6	9
M40	5	7
M50	4	6
M63	0	0
M75	0	0

Note Our IP 68 brass cable glands are used as the reference for these guideline values.

Dimensions of mounting plate

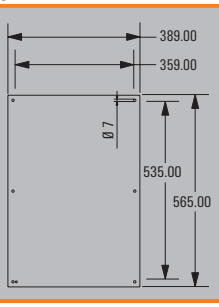

Klippon® TB QL 624520

Depth 200 mm

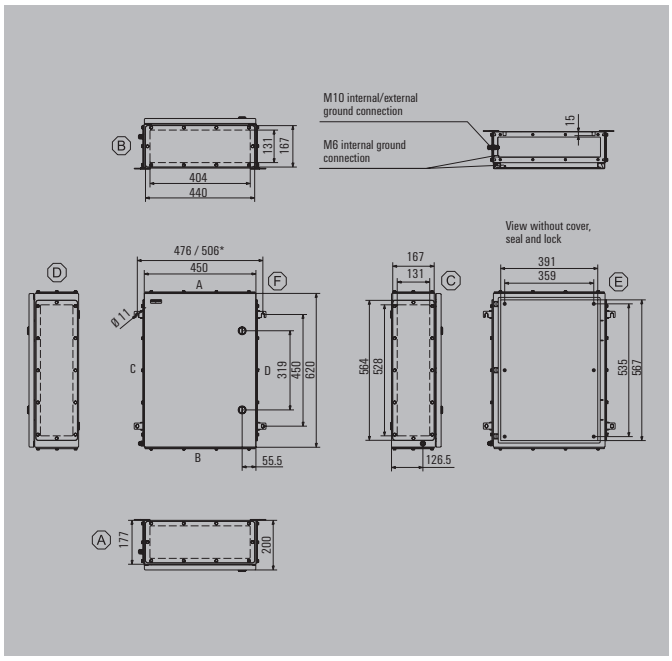

Height/Width/Depth	620 / 450 / 200 mm

Ordering data

Stainless steel 1.4404 316L, electropolished	Order No.
1 gland plate - bottom	1200730000
2 gland plates - top and bottom sides (A & B)	1200740000
3 gland plates - bottom, left and right sides (B, C & D)	1200750000
4 gland plates - top, bottom, left and right sides (A, B, C & D)	1200760000

Note Painted sheet steel enclosure available on request. Standard colour is similar to RAL 7035.

Accessories

Mounting plates and fastening screws	Order No.
Steel sheet, zinc plated	1194020000
Stainless steel 1.4301	1193890000
With hole pattern, natural stainless steel 1.4301	1257740000
Fastening screws for mounting plates	0642600000
Fastening screws for terminal rails	1274150000
Stainless steel spacer M6 x 8, Set of 4	
10 mm length	0935110000
15 mm length	0935120000
20 mm length	0935130000
30 mm length	0935140000
Gland plates and screws - 6 mm	
Top and bottom sides (A & B), electropolished stainless steel 1.4404	1256640000
Left and right sides (C & D), electropolished stainless steel 1.4404	1256650000
Mounting screw, stainless steel 1.4404	1253230000
Mirror-polish Stainless steel 1.4301 rain hood (2R)	
	1281520000
Label holder	
70 x 70 angled stainless steel 1.4301	1279320000
130x50 stainless steel 1.4301	1283450000
100x25 stainless steel 1.4301	1257640000
Document holder	
For DIN A6 size documents	1252780000
For DIN A5 size documents	1252750000
For DIN A4 size documents	1252730000
Set of fixings	
For label holders, rain hoods and document holders (rivet)	1252190000
For plastic (Trafolyte), identification plate (screw)	1285200000
Earthing stud	
Stainless steel 1.4404	1192690000

Note

Max. number of terminals (industry)

Max. number of terminals (industry)	vertical	horizontal
2.5 mm²	3x105	5x71
4 mm²	3x88	5x59
6 mm²	3x66	4x45
10 mm²	2x53	4x36
16 mm²	2x44	3x30
35 mm²	1x33	2x22

Note
*For enclosure versions with zero, one or two gland plates, the horizontal gap between the mounting feet is reduced by 30 mm.
Assembly with terminal blocks provides for 10 mm clearance to the ends of the mounting rail.
Recommended order:
TS 35 mounting rail (screw terminal) WDU 2.5 1020000000 / (tension clamp terminal) ZDU 2.5 1608510000 / (tension clamp terminal) PDU 2.5 1896110000
TS 32 mounting rail (screw terminal) SAK 2.5 0279660000
TS 15 mounting rail (screw terminal) AKZ 2.5 0697160000

Number of cable entries

Number of cable entries	A / B	C / D
M12	63	80
M16	42	54
M20	27	36
M25	23	30
M32	12	17
M40	10	14
M50	4	6
M63	4	5
M75	3	4

Note Our IP 68 brass cable glands serve as a reference for these recommended values.

Dimensions of mounting plate

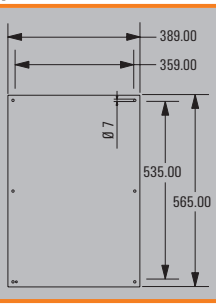

Klippon® TB QL 765015

Depth 150 mm

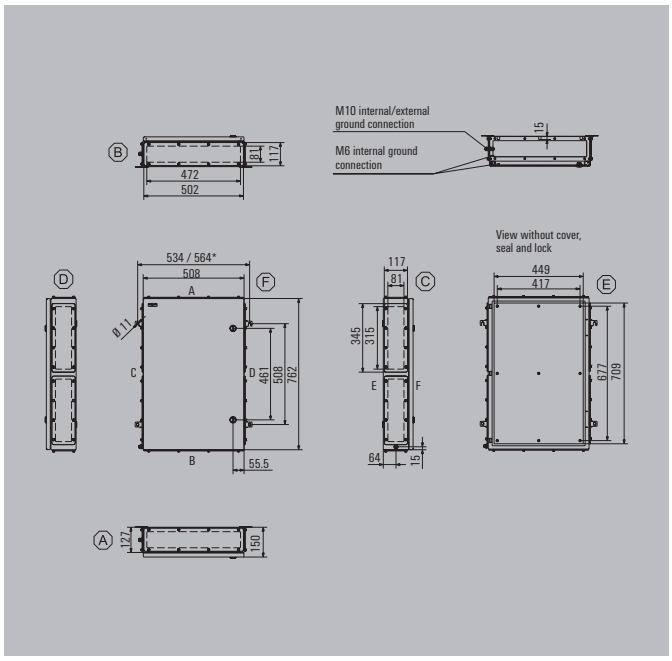

Height/Width/Depth	762 / 508 / 150 mm

Ordering data

Stainless steel 1.4404 316L, electropolished	Order No.
1 gland plate - bottom	1200780000
2 gland plates - top and bottom sides (A & B)	1200790000
3 gland plates - bottom, left and right sides (B, C & D)	1200810000
4 gland plates - top, bottom, left and right sides (A, B, C & D)	1200820000
Note Painted sheet steel enclosure available on request. Standard colour is similar to RAL 7035.	

Accessories

Mounting plates and fastening screws	Order No.
Steel sheet, zinc plated	1194030000
Stainless steel 1.4301	1193900000
With hole pattern, natural stainless steel 1.4301	1257750000
Fastening screws for mounting plates	0642600000
Fastening screws for terminal rails	1274150000
Stainless steel spacer M6 x 8, Set of 4	
10 mm length	0935110000
15 mm length	0935120000
20 mm length	0935130000
30 mm length	0935140000
Gland plates and screws - 6 mm	
Top and bottom sides (A & B), electropolished stainless steel 1.4404	1256660000
Left and right sides (C & D), electropolished stainless steel 1.4404	1256670000
Mounting screw, stainless steel 1.4404	1253230000
Mirror-polish Stainless steel 1.4301 rain hood (2R)	
	1281530000
Label holder	
70 x 70 angled stainless steel 1.4301	1279320000
130x50 stainless steel 1.4301	1283450000
100x25 stainless steel 1.4301	1257640000
Document holder	
For DIN A6 size documents	1252780000
For DIN A5 size documents	1252750000
For DIN A4 size documents	1252730000
Set of fixings	
For label holders, rain hoods and document holders (rivet)	1252190000
For plastic (Trafolyte), identification plate (screw)	1285200000
Earthing stud	
Stainless steel 1.4404	1192690000

Note

Max. number of terminals (industry)

Max. number of terminals (industry)	vertical	horizontal
2.5 mm²	4x132	7x82
4 mm²	4x111	6x69
6 mm²	3x83	5x52
10 mm²	3x67	5x42
16 mm²	2x56	4x35
35 mm²	2x42	3x26

Note *For enclosure versions with zero, one or two gland plates, the horizontal gap between the mounting feet is reduced by 30 mm.
Assembly with terminal blocks provides for 10 mm clearance to the ends of the mounting rail.
Recommended order:
TS 35 mounting rail (screw terminal) WDU 2.5 1020000000 / (tension clamp terminal) ZDU 2.5 1608510000 / (tension clamp terminal) PDU 2.5 1896110000
TS 32 mounting rail (screw terminal) SAK 2.5 0279660000
TS 15 mounting rail (screw terminal) AKZ 2.5 0697160000

Number of cable entries

Number of cable entries	A / B	C / D
M12	42	58
M16	24	32
M20	21	26
M25	9	12
M32	7	10
M40	6	8
M50	5	6
M63	0	0
M75	0	0

Note Our IP 68 brass cable glands serve as a reference for these recommended values.

Dimensions of mounting plate

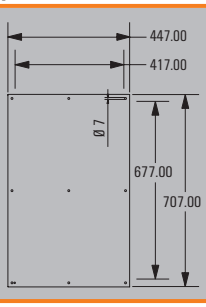

Klippon® TB QL 765020

Depth 200 mm

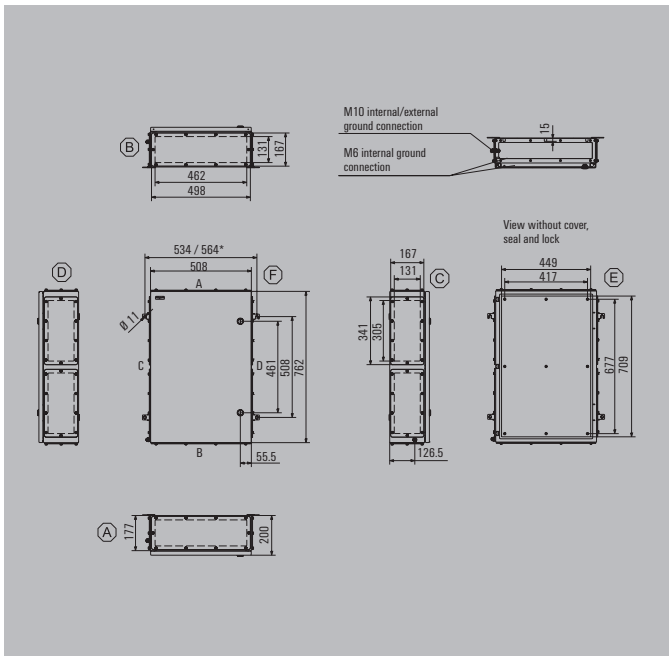

Height/Width/Depth	762 / 508 / 200 mm

Ordering data

Stainless steel 1.4404 316L, electropolished	Order No.
1 gland plate - bottom	1200840000
2 gland plates - top and bottom sides (A & B)	1200850000
3 gland plates - bottom, left and right sides (B, C & D)	1200860000
4 gland plates - top, bottom, left and right sides (A, B, C & D)	1200870000

Note Painted sheet steel enclosure available on request. Standard colour is similar to RAL 7035.

Accessories

Mounting plates and fastening screws	Order No.
Steel sheet, zinc plated	1194030000
Stainless steel 1.4301	1193900000
With hole pattern, natural stainless steel 1.4301	1257750000
Fastening screws for mounting plates	0642600000
Fastening screws for terminal rails	1274150000
Stainless steel spacer M6 x 8, Set of 4	
10 mm length	0935110000
15 mm length	0935120000
20 mm length	0935130000
30 mm length	0935140000
Gland plates and screws - 6 mm	
Top and bottom sides (A & B), electropolished stainless steel 1.4404	1256680000
Left and right sides (C & D), electropolished stainless steel 1.4404	1256690000
Mounting screw, stainless steel 1.4404	1253230000
Mirror-polish Stainless steel 1.4301 rain hood (2R)	
	1281540000
Label holder	
70 x 70 angled stainless steel 1.4301	1279320000
130x50 stainless steel 1.4301	1283450000
100x25 stainless steel 1.4301	1257640000
Document holder	
For DIN A6 size documents	1252780000
For DIN A5 size documents	1252750000
For DIN A4 size documents	1252730000
Set of fixings	
For label holders, rain hoods and document holders (rivet)	1252190000
For plastic (Trafolyte), identification plate (screw)	1285200000
Earthing stud	
Stainless steel 1.4404	1192690000

Note

Max. number of terminals (industry)

Max. number of terminals (industry)	vertical	horizontal
2.5 mm²	4x132	7x82
4 mm²	4x111	6x69
6 mm²	3x83	5x52
10 mm²	3x67	5x42
16 mm²	2x56	4x35
35 mm²	2x42	3x26

Note *For enclosure versions with zero, one or two gland plates, the horizontal gap between the mounting feet is reduced by 30 mm.
Assembly with terminal blocks provides for 10 mm clearance to the ends of the mounting rail.
Recommended order:
TS 35 mounting rail (screw terminal) WDU 2.5 1020000000 / (tension clamp terminal) ZDU 2.5 1608510000 / (tension clamp terminal) PDU 2.5 1896110000
TS 32 mounting rail (screw terminal) SAK 2.5 0279660000
TS 15 mounting rail (screw terminal) AKZ 2.5 0697160000

Number of cable entries

Number of cable entries	A / B	C / D
M12	70	96
M16	48	64
M20	32	40
M25	26	34
M32	14	18
M40	12	14
M50	5	6
M63	4	6
M75	3	4

Note Our IP 68 brass cable glands are used as the reference for these guideline values.

Dimensions of mounting plate

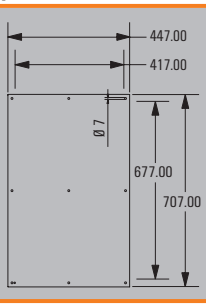

Klippon® TB QL 916115

Depth 150 mm

Height/Width/Depth	914 / 610 / 150 mm

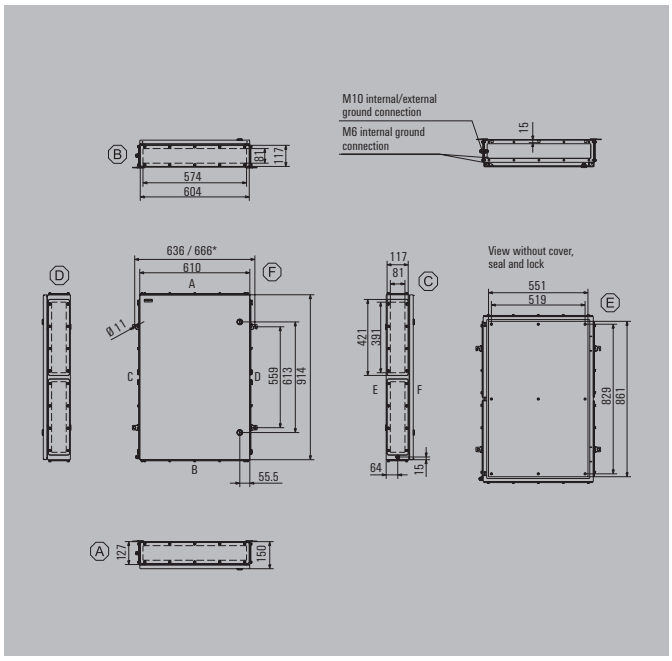

Ordering data

Stainless steel 1.4404 316L, electropolished	Order No.
1 gland plate - bottom	1200890000
2 gland plates - top and bottom sides (A & B)	1200910000
3 gland plates - bottom, left and right sides (B, C & D)	1200920000
4 gland plates - top, bottom, left and right sides (A, B, C & D)	1200930000
Note	Painted sheet steel enclosure available on request. Standard colour is similar to RAL 7035.

Accessories

Mounting plates and fastening screws	Order No.
Steel sheet, zinc plated	1194040000
Stainless steel 1.4301	1193910000
With hole pattern, natural stainless steel 1.4301	1257760000
Fastening screws for mounting plates	0642600000
Fastening screws for terminal rails	1274150000
Stainless steel spacer M6 x 8, Set of 4	
10 mm length	0935110000
15 mm length	0935120000
20 mm length	0935130000
30 mm length	0935140000
Gland plates and screws - 6 mm	
Top and bottom sides (A & B), electropolished stainless steel 1.4404	1256710000
Left and right sides (C & D), electropolished stainless steel 1.4404	1256720000
Mounting screw, stainless steel 1.4404	1253230000
Mirror-polish Stainless steel 1.4301 rain hood (2R)	
	1281550000
Label holder	
70 x 70 angled stainless steel 1.4301	1279320000
130x50 stainless steel 1.4301	1283450000
100x25 stainless steel 1.4301	1257640000
Document holder	
For DIN A6 size documents	1252780000
For DIN A5 size documents	1252750000
For DIN A4 size documents	1252730000
Set of fixings	
For label holders, rain hoods and document holders (rivet)	1252190000
For plastic (Trafolyte), identification plate (screw)	1285200000
Earthing stud	
Stainless steel 1.4404	1192690000

Note

Max. number of terminals (industry)

Max. number of terminals (industry)	vertical	horizontal
2.5 mm²	5x161	8x102
4 mm²	4x135	7x85
6 mm²	4x102	7x64
10 mm²	3x82	6x52
16 mm²	3x68	5x43
35 mm²	2x51	4x32

Note

*For enclosure versions with zero, one or two gland plates, the horizontal gap between the mounting feet is reduced by 30 mm.
Assembly with terminal blocks provides for 10 mm clearance to the ends of the mounting rail.
Recommended order:
TS 35 mounting rail (screw terminal) WDU 2.5 1020000000 / (tension clamp terminal) ZDU 2.5 1608510000 / (tension clamp terminal) PDU 2.5 1896110000
TS 32 mounting rail (screw terminal) SAK 2.5 0279660000
TS 15 mounting rail (screw terminal) AKZ 2.5 0697160000

Number of cable entries

Number of cable entries	A / B	C / D
M12	53	70
M16	29	40
M20	25	34
M25	11	14
M32	9	12
M40	8	10
M50	6	8
M63	0	0
M75	0	0

Note Our IP 68 brass cable glands are used as the reference for these guideline values.

Dimensions of mounting plate

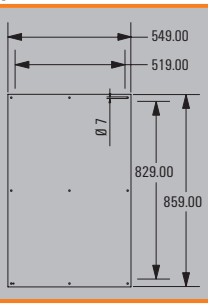

Klippon® TB QL 916120

Depth 200 mm

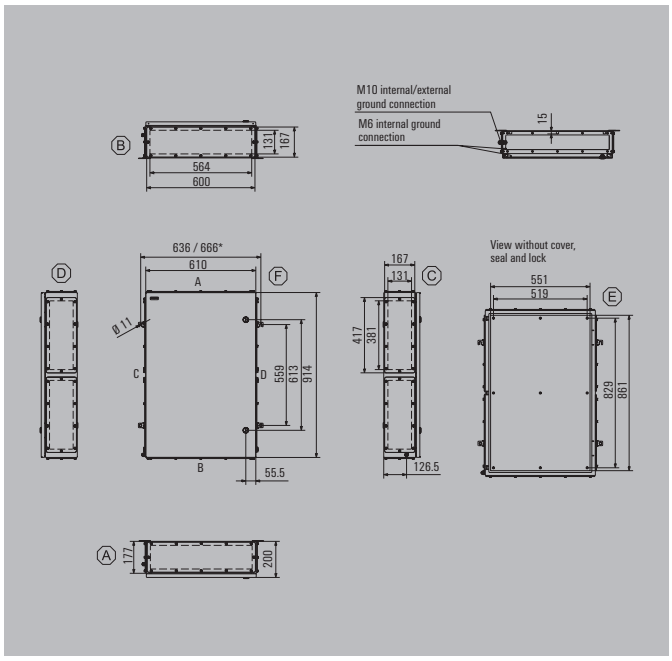

Height/Width/Depth	914 / 610 / 200 mm

Ordering data

Stainless steel 1.4404 316L, electropolished	Order No.
1 gland plate - bottom	1200950000
2 gland plates - top and bottom sides (A & B)	1200960000
3 gland plates - bottom, left and right sides (B, C & D)	1200970000
4 gland plates - top, bottom, left and right sides (A, B, C & D)	1200980000
Note	Painted sheet steel enclosure available on request. Standard colour is similar to RAL 7035.

Accessories

Mounting plates and fastening screws	Order No.
Steel sheet, zinc plated	1194040000
Stainless steel 1.4301	1193910000
With hole pattern, natural stainless steel 1.4301	1257760000
Fastening screws for mounting plates	0642600000
Fastening screws for terminal rails	1274150000
Stainless steel spacer M6 x 8, Set of 4	
10 mm length	0935110000
15 mm length	0935120000
20 mm length	0935130000
30 mm length	0935140000
Gland plates and screws - 6 mm	
Top and bottom sides (A & B), electropolished stainless steel 1.4404	1256730000
Left and right sides (C & D), electropolished stainless steel 1.4404	1256740000
Mounting screw, stainless steel 1.4404	1253230000
Mirror-polish Stainless steel 1.4301 rain hood (2R)	
	1281570000
Label holder	
70 x 70 angled stainless steel 1.4301	1279320000
130x50 stainless steel 1.4301	1283450000
100x25 stainless steel 1.4301	1257640000
Document holder	
For DIN A6 size documents	1252780000
For DIN A5 size documents	1252750000
For DIN A4 size documents	1252730000
Set of fixings	
For label holders, rain hoods and document holders (rivet)	1252190000
For plastic (Trafolyte), identification plate (screw)	1285200000
Earthing stud	
Stainless steel 1.4404	1192690000

Note

Max. number of terminals (industry)

Max. number of terminals (industry)	vertical	horizontal
2.5 mm²	5x161	8x102
4 mm²	4x135	7x85
6 mm²	4x102	7x64
10 mm²	3x82	6x52
16 mm²	3x68	5x43
35 mm²	2x51	4x32

Note

*For enclosure versions with zero, one or two gland plates, the horizontal gap between the mounting feet is reduced by 30 mm.
Assembly with terminal blocks provides for 10 mm clearance to the ends of the mounting rail.
Recommended order:
TS 35 mounting rail (screw terminal) WDU 2.5 1020000000 / (tension clamp terminal) ZDU 2.5 1608510000 / (tension clamp terminal) PDU 2.5 1896110000
TS 32 mounting rail (screw terminal) SAK 2.5 0279660000
TS 15 mounting rail (screw terminal) AKZ 2.5 0697160000

Number of cable entries

Number of cable entries	A / B	C / D
M12	88	116
M16	58	80
M20	38	52
M25	33	42
M32	18	24
M40	15	20
M50	6	8
M63	5	6
M75	4	6

Note Our IP 68 brass cable glands serve as a reference for these recommended values.

Dimensions of mounting plate

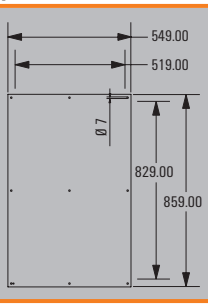

Klippon® TB QL 987420

Depth **200 mm**

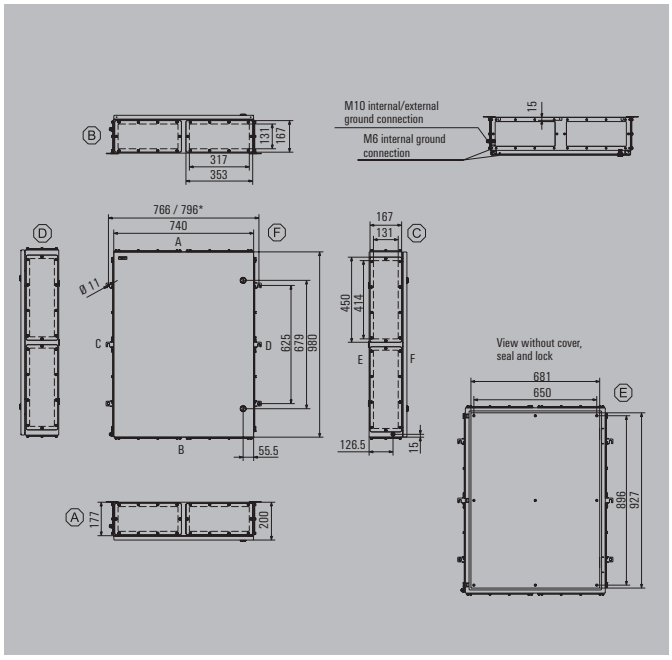

Height/Width/Depth	980 / 740 / 200 mm

Ordering data

Stainless steel 1.4404 316L, electropolished	Order No.
1 gland plate - bottom	1201010000
2 gland plates - top and bottom sides (A & B)	1201020000
3 gland plates - bottom, left and right sides (B, C & D)	1201030000
4 gland plates - top, bottom, left and right sides (A, B, C & D)	1201040000
Note	Painted sheet steel enclosure available on request. Standard colour is similar to RAL 7035.

Accessories

Mounting plates and fastening screws	Order No.
Steel sheet, zinc plated	1194050000
Stainless steel 1.4301	1193920000
With hole pattern, natural stainless steel 1.4301	1257770000
Fastening screws for mounting plates	0642600000
Fastening screws for terminal rails	1274150000
Stainless steel spacer M6 x 8, Set of 4	
10 mm length	0935110000
15 mm length	0935120000
20 mm length	0935130000
30 mm length	0935140000
Gland plates and screws - 6 mm	
Top and bottom sides (A & B), electropolished stainless steel 1.4404	1256750000
Left and right sides (C & D), electropolished stainless steel 1.4404	1256760000
Mounting screw, stainless steel 1.4404	1253230000
Mirror-polish Stainless steel 1.4301 rain hood (2R)	
	1281580000
Label holder	
70 x 70 angled stainless steel 1.4301	1279320000
130x50 stainless steel 1.4301	1283450000
100x25 stainless steel 1.4301	1257640000
Document holder	
For DIN A6 size documents	1252780000
For DIN A5 size documents	1252750000
For DIN A4 size documents	1252730000
Set of fixings	
For label holders, rain hoods and document holders (rivet)	1252190000
For plastic (Trafolyte), identification plate (screw)	1285200000
Earthing stud	
Stainless steel 1.4404	1192690000

Note

Max. number of terminals (industry)

Max. number of terminals (industry)	vertical	horizontal
2.5 mm²	6x174	9x127
4 mm²	6x146	8x106
6 mm²	5x110	7x80
10 mm²	4x88	6x64
16 mm²	4x74	5x54
35 mm²	3x55	4x40

Note

*For enclosure versions with zero, one or two gland plates, the horizontal gap between the mounting feet is reduced by 30 mm.
Assembly with terminal blocks provides for 10 mm clearance to the ends of the mounting rail.
Recommended order:
TS 35 mounting rail (screw terminal) WDU 2.5 1020000000 / (tension clamp terminal) ZDU 2.5 1608510000 / (tension clamp terminal) PDU 2.5 1896110000
TS 32 mounting rail (screw terminal) SAK 2.5 0279660000
TS 15 mounting rail (screw terminal) AKZ 2.5 0697160000

Number of cable entries

Number of cable entries	A / B	C / D
M12	96	126
M16	64	84
M20	42	54
M25	36	48
M32	20	26
M40	16	22
M50	6	10
M63	6	8
M75	4	6

Note Our IP 68 brass cable glands serve as a reference for these recommended values.

Dimensions of mounting plate

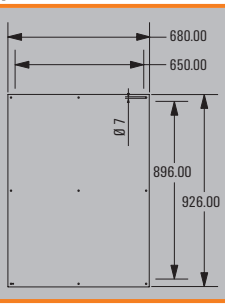

Klippon® TB FS - Fixing Screw

Steel enclosures
for use in industrial and in explosive hazard areas

The Klippon® TB enclosure range features superior performance characteristics, even in the most extreme environmental surroundings. In addition, it meets the rigorous requirements of potentially explosive atmospheres that can be found in the process or power generation industries. The new Klippon® TB FS enclosure range complements our Klippon® TB MH and Klippon® TB QL standard enclosures.

Weidmüller can manufacture and supply this enclosure to match customer specifications and fitted with all necessary terminals and cable glands.

NEW

Overview of enclosures

Ordering data

Description	Length x width x depth in mm	1 Gland Plate (below)	2 Gland Plates (above + below)	3 Gland Plates (below + sides)	4 Gland Plates (all sides)
KTB FS 221513 S4E_*	229 x 152 x 133	1195660000	1195670000	1195680000	1195690000
KTB FS 262615 S4E_*	260 x 260 x 150	1195710000	1195720000	1195730000	1195740000
KTB FS 262620 S4E_*	260 x 260 x 200	1195760000	1195770000	1195780000	1195790000
KTB FS 303015 S4E_*	306 x 306 x 150	1195810000	1195820000	1195830000	1195840000
KTB FS 303020 S4E_*	306 x 306 x 200	1195860000	1195870000	1195880000	1195890000
KTB FS 352615 S4E_*	350 x 260 x 150	1195910000	1195920000	1195930000	1195940000
KTB FS 352620 S4E_*	350 x 260 x 200	1195960000	1195970000	1195980000	1195990000
KTB FS 403015 S4E_*	400 x 300 x 150	1196010000	1196020000	1196030000	1196040000
KTB FS 403020 S4E_*	400 x 300 x 200	1196060000	1196070000	1196080000	1196090000
KTB FS 453815 S4E_*	458 x 382 x 150	1196110000	1196120000	1196130000	1196140000
KTB FS 453820 S4E_*	458 x 382 x 200	1196160000	1196170000	1196180000	1196190000
KTB FS 484815 S4E_*	480 x 480 x 150	1196210000	1196220000	1196230000	1196240000
KTB FS 484820 S4E_*	480 x 480 x 200	1196260000	1196270000	1196280000	1196290000
KTB FS 553515 S4E_*	550 x 350 x 150	1196310000	1196320000	1196330000	1196340000
KTB FS 553520 S4E_*	550 x 350 x 200	1196360000	1196370000	1196380000	1196390000
KTB FS 624515 S4E_*	620 x 450 x 150	1196410000	1196420000	1196430000	1196440000
KTB FS 624520 S4E_*	620 x 450 x 200	1196460000	1196470000	1196480000	1196490000
KTB FS 765015 S4E_*	762 x 508 x 150	1196510000	1196520000	1196530000	1196540000
KTB FS 765020 S4E_*	762 x 508 x 200	1196560000	1196570000	1196580000	1196590000
KTB FS 916115 S4E_*	914 x 610 x 150	1196610000	1196620000	1196630000	1196640000
KTB FS 916120 S4E_*	914 x 610 x 200	1196660000	1196670000	1196680000	1196690000
KTB FS 987420 S4E_*	980 x 740 x 200	1196710000	1196720000	1196730000	1196740000
Note		The Klippon® TB FS enclosures are only available on request and subject to a minimum order quantity. * Placeholder for the number of flange plates (1, 2, 3, 4). Klippon® TB FS enclosures without flange plates are available on request.			

Technical Overview

Features

• Available in 12 sizes and 3 standard depths
• Equipped with up to 4 gland plates
• The gasket is protected against compression
• Cover lock outside the sealed zone
• Improved temperature performance
• IP66/IP67 protection
• Earth studs in enclosure cover and bottom section
• Welded mounting feet
Note

Technical data

Enclosure material	Stainless steel 1.4404 (316L) 1.5 mm
Surface	Electroplished
IP protection class	IP 66 / IP 67 (IP 66 to IEC EN 60079-0)
NEMA Rating	3, 4x, 12
Gland plates	1 - 4 (fixed with M6 hexagon head screws with a slot and 10 mm heads), optionally without a gland plate
Gland plate thickness	3 mm (other thickness of up to 20 mm are available on request)
Earthing inside	Enclosure base: welded M6 stainless steel earth studs
Earthing outside	Continuous M10 brass earth stud (optionally with stainless-steel earth stud)
Installation mounting	4 or 9 mounting bolts with M6 threaded holes to attach the mounting plate or mounting rails
Enclosure attachment	by means of 4 welded-on mounting feet with 11 mm holes (2 slots and 2 circular mounting feet)
Lid opening	Fully removable lid
Lid fixing	M6 hexagon head slotted screws SW10
Impact resistance	7 J ATEX applications, 10 J industrial applications
Gasket material	Silicone
Operating temperature range*	-60 °C...+135 °C*
Torque - cover and flange plate screws**	2.5 Nm
Note	*If used in temperature ranges above 105 °C, IP protection is limited to IP 66. **For securing the cover we recommend our 10 mm hexagonal socket wrench (9009070000)

Approvals for empty enclosures

ATEX certificate	KEMA 10ATEX0044 U
ATEX marking	II 2 G Ex e IIC Gb II 2 D Ex tb IIIC Db IP66/67
IECEx certificate	IECEx KEM 10.0013U
IECEx marking	Ex e IIC Gb Ex tb IIIC Db IP66/67
GOST Ex	POCC DE.ME92.B02036
CCOE	P267536/1
cULus	E243298
Germanischer Lloyd	11535 - 10 HH
Russian Maritime Register	10.04094.250
INMETRO	In preparation
Note	The Klippon® TB FS enclosure range can be pre-fitted in our customer specific production department according to your wishes; as an example, terminals, or other approved components, can be installed as required.

Approvals for control and distribution box

ATEX certificate	KEMA 10ATEX0048
ATEX marking	II 2 G Ex e IIC T...Gb II 1 G Ex ia IIC T...Ga II 2(1) G Ex e [ia Ga] IIC T...Gb II 2 D Ex tb IIIC T85 °C...T135 °C Db IP66/67
IECEx certificate	IECEx KEM 10.0019
IECEx marking	Ex e IIC T...Gb Ex ia IIC T...Ga Ex e [ia Ga] IIC T...Gb Ex tb IIIC T85 °C...T135 °C Db IP66/67
Note	

Integrate, expand and customise: the perfect supplement to every application

The fully structured range of system accessories for the Klippon® TB enclosure range allows you to easily adapt the enclosure to meet the specific requirements of every application.

The following options are available:

1 Document holder

Document holders for storage of important documents in the enclosure.

2 Earthing studs

Earthing studs are replaceable. Available in two versions – brass and stainless steel.

3 Gland plates

Gland plates are available as spares and also in various material thicknesses.

4 Mounting plates

Mounting plates with and without a drilling pattern, for horizontal and vertical mounting of rails, or components fitted directly.

5 Mounting hardware kits

Mounting hardware kits are available for quick and easy installation of label holders, mounting plates, gland plates, document holders and rain hoods.

6 Door stay

A door stay prevent the door from being closed unintentionally, regardless of the mounting position of the enclosure.
This item is **only** available Ex-works.

7 Locking systems

Various locking systems are available for the safe securing of the enclosure. There are padlocks for the Klippon® TB MH enclosures and a range of lock inserts for the Klippon® TB QL enclosures.

8 Type label holder

A range of label holders are available for product identification.

Klippon® TB FS 221513

Depth 133 mm

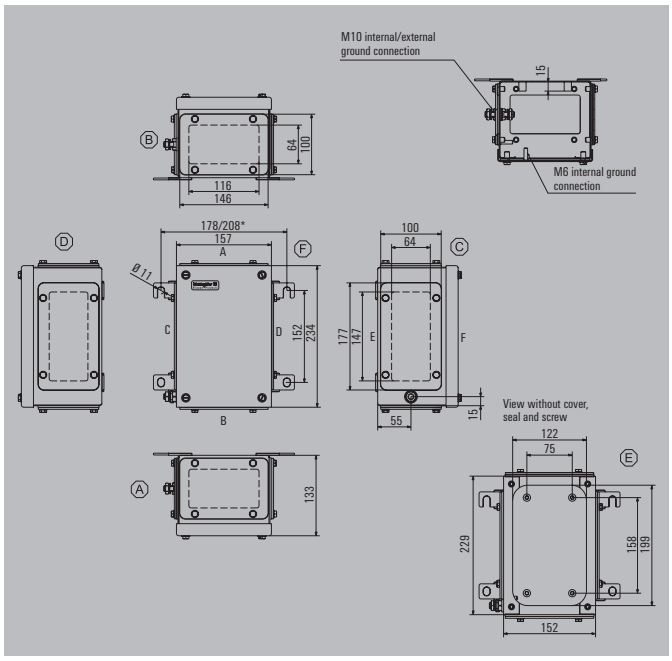

Height/Width/Depth	229 / 152 / 133 mm

Ordering data

Stainless steel 1.4404 316L, electropolished	Order No.
1 gland plate - bottom side (B)	1195660000
2 gland plates - top and bottom sides (A & B)	1195670000
3 gland plates - bottom, left and right sides (B, C & D)	1195680000
4 gland plates - top, bottom, left and right sides (A, B, C & D)	1195690000
Note	Painted sheet steel enclosure available on request. The colours of painted enclosures may vary under certain circumstances.

Accessories

Mounting plates and fastening screws	Order No.
Steel sheet, zinc plated	1193930000
Stainless steel 1.4301	1193810000
With hole pattern, natural stainless steel 1.4301	1257650000
Fastening screws for mounting plates	0642600000
Fastening screws for terminal rails	1274150000
Stainless steel spacer M6 x 8, Set of 4	
10 mm length	0935110000
15 mm length	0935120000
20 mm length	0935130000
30 mm length	0935140000
Gland plates and screws - 6 mm	
Top and bottom sides (A & B), electropolished stainless steel 1.4404	1256270000
Left and right sides (C & D), electropolished stainless steel 1.4404	1256280000
Mounting screw, stainless steel 1.4404	1253230000
Label holder	
70 x 70 angled stainless steel 1.4301	1279320000
130x50 stainless steel 1.4301	1283450000
100x25 stainless steel 1.4301	1257640000
Document holder	
For DIN A6 size documents	
For DIN A5 size documents	
For DIN A4 size documents	
Set of fixings	
For label holders, rain hoods and document holders (rivet)	1252190000
For plastic (Trafolyte), identification plate (screw)	1285200000
Earthing stud	
Stainless steel 1.4404	1192690000

Note

Max. number of terminals (industry)

Max. number of terminals (industry)	vertical	horizontal
2.5 mm²	1x29	1x15
4 mm²	1x22	1x13
6 mm²	1x16	1x9
10 mm²	1x13	1x7
16 mm²	1x11	1x6
35 mm²	1x8	1x3

Note

*For the enclosure versions with no, one or two gland plates, the horizontal distance between the mounting feet is reduced by 30 mm.
The assembly with modular terminals gives consideration to a distance of 10 mm from the end of each mounting rail.
Order recommendations:
TS 35 mounting rail (screw terminal) WDU 2.5 1020000000 / (tension clamp terminal) ZDU 2.5 1608510000 / (tension clamp terminal) PDU 2.5 1896110000
TS 32 mounting rail (screw terminal) SAK 2.5 0279660000
TS 15 mounting rail (screw terminal) AKZ 2.5 0697160000

Number of cable entries

Number of cable entries	A / B	C / D
M12	6	8
M16	5	6
M20	2	3
M25	2	2
M32	1	2
M40	1	2
M50	0	0
M63	0	0
M75	0	0
Note	Our IP 68 brass cable glands are used as the reference for these guideline values.	

Dimensions of mounting plate

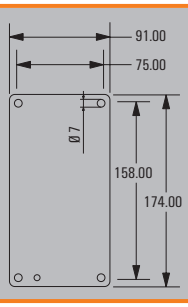

Klippon® TB FS 262615

Depth 150 mm

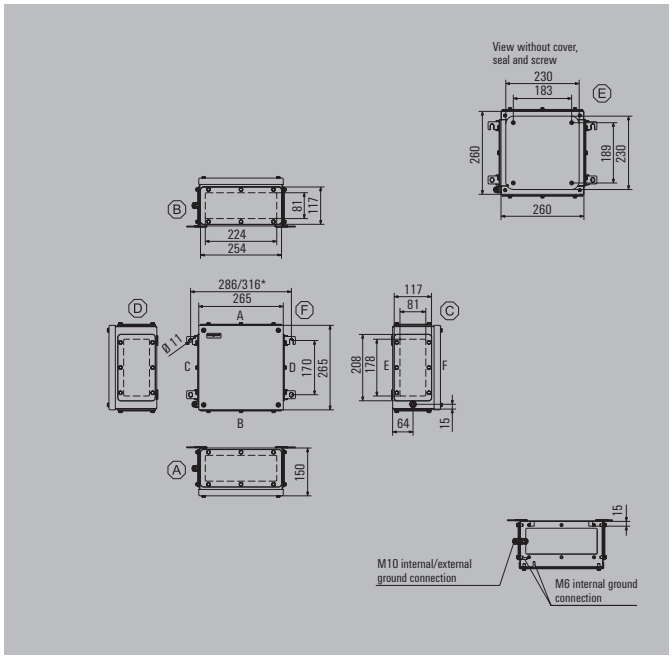

Height/Width/Depth	260 / 260 / 150 mm

Ordering data

Stainless steel 1.4404 316L, electropolished	Order No.
1 gland plate - bottom side (B)	1195710000
2 gland plates - top and bottom sides (A & B)	1195720000
3 gland plates - bottom, left and right sides (B, C & D)	1195730000
4 gland plates - top, bottom, left and right sides (A, B, C & D)	1195740000
Note	Painted sheet steel enclosure available on request. The colours of painted enclosures may vary under certain circumstances.

Accessories

Mounting plates and fastening screws	Order No.
Steel sheet, zinc plated	1193950000
Stainless steel 1.4301	1193820000
With hole pattern, natural stainless steel 1.4301	1257660000
Fastening screws for mounting plates	0642600000
Fastening screws for terminal rails	1274150000
Stainless steel spacer M6 x 8, Set of 4	
10 mm length	0935110000
15 mm length	0935120000
20 mm length	0935130000
30 mm length	0935140000
Gland plates and screws - 6 mm	
Top and bottom sides (A & B), electropolished stainless steel 1.4404	1256290000
Left and right sides (C & D), electropolished stainless steel 1.4404	1256310000
Mounting screw, stainless steel 1.4404	1253230000
Label holder	
70 x 70 angled stainless steel 1.4301	1279320000
130x50 stainless steel 1.4301	1283450000
100x25 stainless steel 1.4301	1257640000
Document holder	
For DIN A6 size documents	1252780000
For DIN A5 size documents	
For DIN A4 size documents	
Set of fixings	
For label holders, rain hoods and document holders (rivet)	1252190000
For plastic (Trafolyte), identification plate (screw)	1285200000
Earthing stud	
Stainless steel 1.4404	1192690000

Note

Max. number of terminals (industry)

Max. number of terminals (industry)	vertical	horizontal
2.5 mm²	2x35	2x34
4 mm²	1x30	1x29
6 mm²	1x22	1x22
10 mm²	1x18	1x17
16 mm²	1x15	1x14
35 mm²	1x10	1x10

Note

*For the enclosure versions with no, one or two gland plates, the horizontal distance between the mounting feet is reduced by 30 mm.
The assembly with modular terminals gives consideration to a distance of 10 mm from the end of each mounting rail.
Order recommendations:
TS 35 mounting rail (screw terminal) WDU 2.5 1020000000 / (tension clamp terminal) ZDU 2.5 1608510000 / (tension clamp terminal) PDU 2.5 1896110000
TS 32 mounting rail (screw terminal) SAK 2.5 0279660000
TS 15 mounting rail (screw terminal) AKZ 2.5 0697160000

Number of cable entries

Number of cable entries	A / B	C / D
M12	20	15
M16	11	8
M20	9	7
M25	4	3
M32	3	2
M40	3	2
M50	2	2
M63	0	0
M75	0	0

Note Our IP 68 brass cable glands are used as the reference for these guideline values.

Dimensions of mounting plate

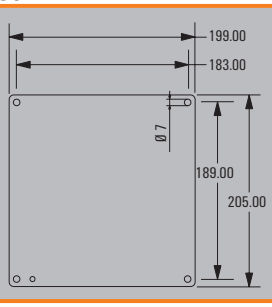

Klippon® TB FS 262620

Depth 200 mm

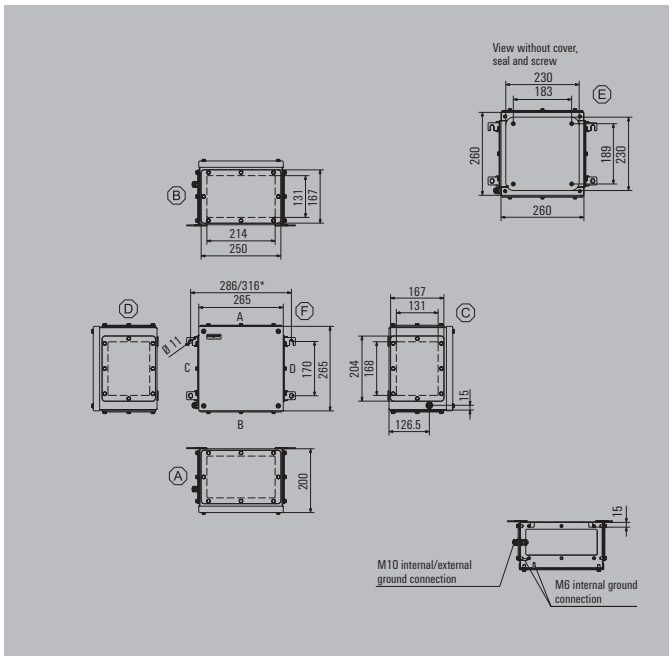

Height/Width/Depth	260 / 260 / 200 mm

Ordering data

Stainless steel 1.4404 316L, electropolished	Order No.
1 gland plate - bottom side (B)	1195760000
2 gland plates - top and bottom sides (A & B)	1195770000
3 gland plates - bottom, left and right sides (B, C & D)	1195780000
4 gland plates - top, bottom, left and right sides (A, B, C & D)	1195790000
Note	Painted sheet steel enclosure available on request. The colours of painted enclosures may vary under certain circumstances.

Accessories

Mounting plates and fastening screws	Order No.
Steel sheet, zinc plated	1193950000
Stainless steel 1.4301	1193820000
With hole pattern, natural stainless steel 1.4301	1257660000
Fastening screws for mounting plates	0642600000
Fastening screws for terminal rails	1274150000
Stainless steel spacer M6 x 8, Set of 4	
10 mm length	0935110000
15 mm length	0935120000
20 mm length	0935130000
30 mm length	0935140000
Gland plates and screws - 6 mm	
Top and bottom sides (A & B), electropolished stainless steel 1.4404	1256320000
Left and right sides (C & D), electropolished stainless steel 1.4404	1256330000
Mounting screw, stainless steel 1.4404	1253230000
Label holder	
70 x 70 angled stainless steel 1.4301	1279320000
130x50 stainless steel 1.4301	1283450000
100x25 stainless steel 1.4301	1257640000
Document holder	
For DIN A6 size documents	1252780000
For DIN A5 size documents	
For DIN A4 size documents	
Set of fixings	
For label holders, rain hoods and document holders (rivet)	1252190000
For plastic (Trafolyte), identification plate (screw)	1285200000
Earthing stud	
Stainless steel 1.4404	1192690000

Note

Max. number of terminals (industry)

Max. number of terminals (industry)	vertical	horizontal
2.5 mm²	2x35	2x34
4 mm²	1x30	1x29
6 mm²	1x22	1x22
10 mm²	1x18	1x17
16 mm²	1x15	1x14
35 mm²	1x10	1x10

Note

*For the enclosure versions with no, one or two gland plates, the horizontal distance between the mounting feet is reduced by 30 mm.
The assembly with modular terminals gives consideration to a distance of 10 mm from the end of each mounting rail.
Order recommendations:
TS 35 mounting rail (screw terminal) WDU 2.5 1020000000 / (tension clamp terminal) ZDU 2.5 1608510000 / (tension clamp terminal) PDU 2.5 1896110000
TS 32 mounting rail (screw terminal) SAK 2.5 0279660000
TS 15 mounting rail (screw terminal) AKZ 2.5 0697160000

Number of cable entries

Number of cable entries	A / B	C / D
M12	33	25
M16	22	16
M20	14	11
M25	12	9
M32	6	4
M40	5	4
M50	2	2
M63	2	1
M75	1	1

Note Our IP 68 brass cable glands are used as the reference for these guideline values.

Dimensions of mounting plate

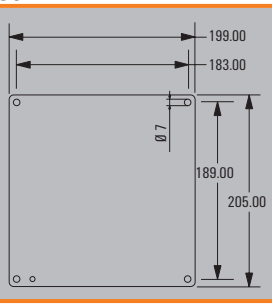

Klippon® TB FS 303015

Depth 150 mm

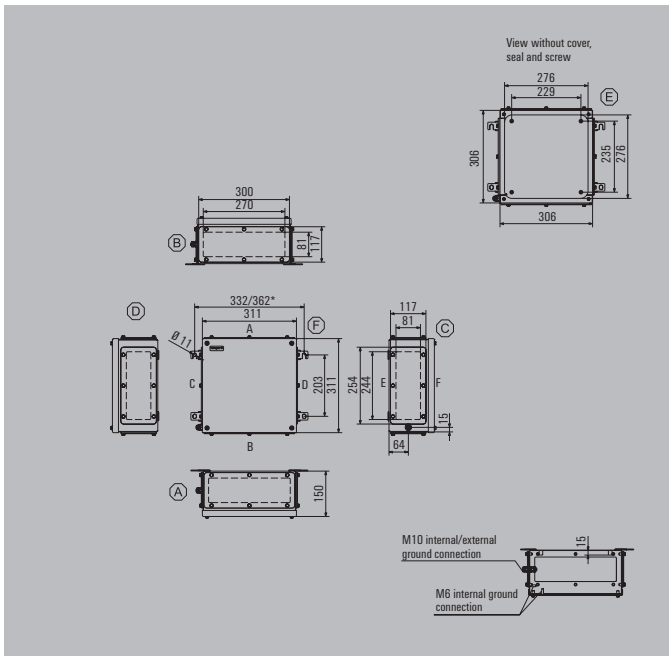

Height/Width/Depth	306 / 306 / 150 mm

Ordering data

Stainless steel 1.4404 316L, electropolished	Order No.
1 gland plate - bottom side (B)	1195810000
2 gland plates - top and bottom sides (A & B)	1195820000
3 gland plates - bottom, left and right sides (B, C & D)	1195830000
4 gland plates - top, bottom, left and right sides (A, B, C & D)	1195840000
Note	Painted sheet steel enclosure available on request. The colours of painted enclosures may vary under certain circumstances.

Accessories

Mounting plates and fastening screws	Order No.
Steel sheet, zinc plated	1193960000
Stainless steel 1.4301	1193830000
With hole pattern, natural stainless steel 1.4301	1257670000
Fastening screws for mounting plates	0642600000
Fastening screws for terminal rails	1274150000
Stainless steel spacer M6 x 8, Set of 4	
10 mm length	0935110000
15 mm length	0935120000
20 mm length	0935130000
30 mm length	0935140000
Gland plates and screws - 6 mm	
Top and bottom sides (A & B), electropolished stainless steel 1.4404	1256340000
Left and right sides (C & D), electropolished stainless steel 1.4404	1256350000
Mounting screw, stainless steel 1.4404	1253230000
Label holder	
70 x 70 angled stainless steel 1.4301	1279320000
130x50 stainless steel 1.4301	1283450000
100x25 stainless steel 1.4301	1257640000
Document holder	
For DIN A6 size documents	1252780000
For DIN A5 size documents	1252750000
For DIN A4 size documents	
Set of fixings	
For label holders, rain hoods and document holders (rivet)	1252190000
For plastic (Trafolyte), identification plate (screw)	1285200000
Earthing stud	
Stainless steel 1.4404	1192690000

Note

Max. number of terminals (industry)

Max. number of terminals (industry)	vertical	horizontal
2.5 mm²	2x44	2x43
4 mm²	2x37	2x36
6 mm²	2x28	2x27
10 mm²	1x22	1x22
16 mm²	1x19	1x18
35 mm²	1x14	1x13

Note

*For the enclosure versions with no, one or two gland plates, the horizontal distance between the mounting feet is reduced by 30 mm.
The assembly with modular terminals gives consideration to a distance of 10 mm from the end of each mounting rail.
Order recommendations:
TS 35 mounting rail (screw terminal) WDU 2.5 1020000000 / (tension clamp terminal) ZDU 2.5 1608510000 / (tension clamp terminal) PDU 2.5 1896110000
TS 32 mounting rail (screw terminal) SAK 2.5 0279660000
TS 15 mounting rail (screw terminal) AKZ 2.5 0697160000

Number of cable entries

Number of cable entries	A / B	C / D
M12	24	20
M16	13	11
M20	11	9
M25	5	4
M32	4	3
M40	3	3
M50	3	2
M63	0	0
M75	0	0

Note Our IP 68 brass cable glands are used as the reference for these guideline values.

Dimensions of mounting plate

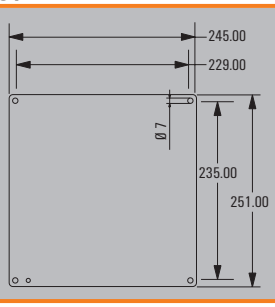

Klippon® TB FS 303020

Depth 200 mm

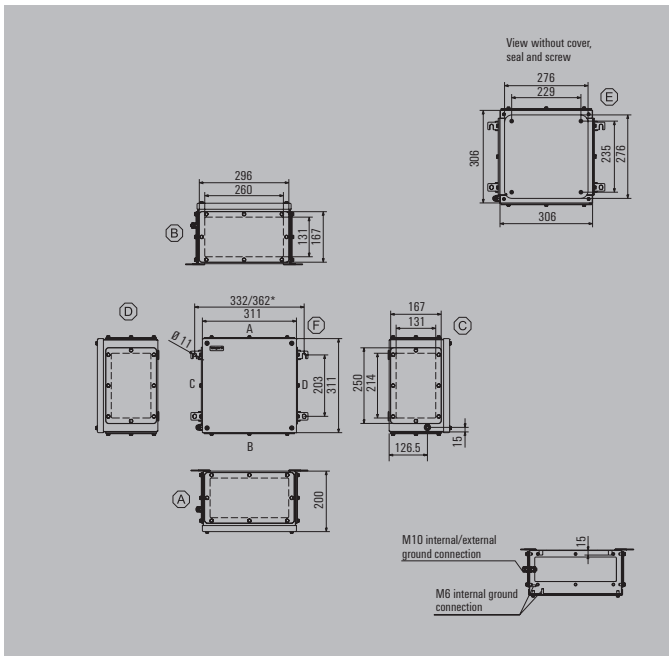

Height/Width/Depth	306 / 306 / 200 mm

Ordering data

Stainless steel 1.4404 316L, electropolished	Order No.
1 gland plate - bottom side (B)	1195860000
2 gland plates - top and bottom sides (A & B)	1195870000
3 gland plates - bottom, left and right sides (B, C & D)	1195880000
4 gland plates - top, bottom, left and right sides (A, B, C & D)	1195890000

Note Painted sheet steel enclosure available on request. The colours of painted enclosures may vary under certain circumstances.

Accessories

Mounting plates and fastening screws	Order No.
Steel sheet, zinc plated	1193960000
Stainless steel 1.4301	1193830000
With hole pattern, natural stainless steel 1.4301	1257670000
Fastening screws for mounting plates	0642600000
Fastening screws for terminal rails	1274150000
Stainless steel spacer M6 x 8, Set of 4	
10 mm length	0935110000
15 mm length	0935120000
20 mm length	0935130000
30 mm length	0935140000
Gland plates and screws - 6 mm	
Top and bottom sides (A & B), electropolished stainless steel 1.4404	1256360000
Left and right sides (C & D), electropolished stainless steel 1.4404	1256370000
Mounting screw, stainless steel 1.4404	1253230000
Label holder	
70 x 70 angled stainless steel 1.4301	1279320000
130x50 stainless steel 1.4301	1283450000
100x25 stainless steel 1.4301	1257640000
Document holder	
For DIN A6 size documents	1252780000
For DIN A5 size documents	1252750000
For DIN A4 size documents	
Set of fixings	
For label holders, rain hoods and document holders (rivet)	1252190000
For plastic (Trafolyte), identification plate (screw)	1285200000
Earthing stud	
Stainless steel 1.4404	1192690000

Note

Max. number of terminals (industry)

Max. number of terminals (industry)	vertical	horizontal
2.5 mm²	2x44	2x43
4 mm²	2x37	2x36
6 mm²	2x28	2x27
10 mm²	1x22	1x22
16 mm²	1x19	1x18
35 mm²	1x14	1x13

Note
*For the enclosure versions with no, one or two gland plates, the horizontal distance between the mounting feet is reduced by 30 mm.
The assembly with modular terminals gives consideration to a distance of 10 mm from the end of each mounting rail.
Order recommendations:
TS 35 mounting rail (screw terminal) WDU 2.5 1020000000 / (tension clamp terminal) ZDU 2.5 1608510000 / (tension clamp terminal) PDU 2.5 1896110000
TS 32 mounting rail (screw terminal) SAK 2.5 0279660000
TS 15 mounting rail (screw terminal) AKZ 2.5 0697160000

Number of cable entries

Number of cable entries	A / B	C / D
M12	40	33
M16	26	22
M20	17	14
M25	14	12
M32	8	6
M40	6	5
M50	3	2
M63	2	2
M75	2	1

Note Our IP 68 brass cable glands are used as the reference for these guideline values.

Dimensions of mounting plate

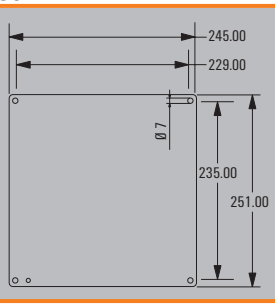

Klippon® TB FS 352615

Depth 150 mm

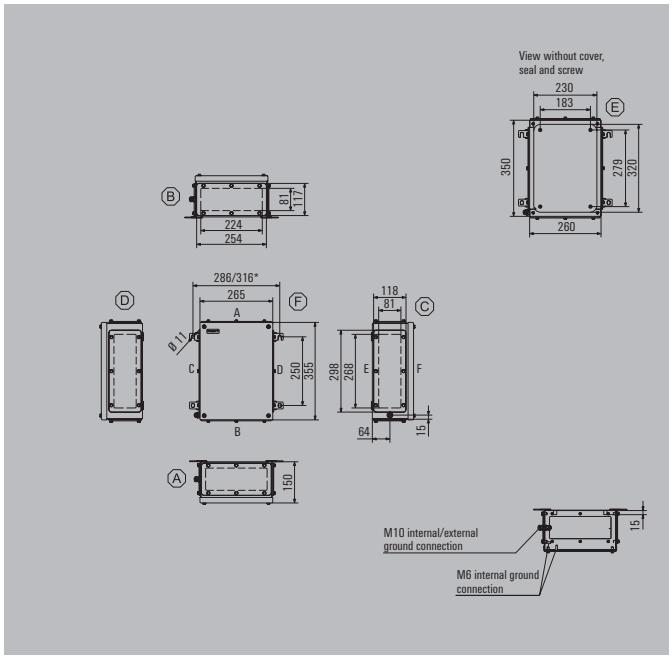

Height/Width/Depth	350 / 260 / 150 mm

Ordering data

Stainless steel 1.4404 316L, electropolished	Order No.
1 gland plate - bottom side (B)	1195910000
2 gland plates - top and bottom sides (A & B)	1195920000
3 gland plates - bottom, left and right sides (B, C & D)	1195930000
4 gland plates - top, bottom, left and right sides (A, B, C & D)	1195940000
Note	Painted sheet steel enclosure available on request. The colours of painted enclosures may vary under certain circumstances.

Accessories

Mounting plates and fastening screws	Order No.
Steel sheet, zinc plated	1193970000
Stainless steel 1.4301	1193840000
With hole pattern, natural stainless steel 1.4301	1257680000
Fastening screws for mounting plates	0642600000
Fastening screws for terminal rails	1274150000
Stainless steel spacer M6 x 8, Set of 4	
10 mm length	0935110000
15 mm length	0935120000
20 mm length	0935130000
30 mm length	0935140000
Gland plates and screws - 6 mm	
Top and bottom sides (A & B), electropolished stainless steel 1.4404	1256380000
Left and right sides (C & D), electropolished stainless steel 1.4404	1256390000
Mounting screw, stainless steel 1.4404	1253230000
Label holder	
70 x 70 angled stainless steel 1.4301	1279320000
130x50 stainless steel 1.4301	1283450000
100x25 stainless steel 1.4301	1257640000
Document holder	
For DIN A6 size documents	1252780000
For DIN A5 size documents	1252750000
For DIN A4 size documents	
Set of fixings	
For label holders, rain hoods and document holders (rivet)	1252190000
For plastic (Trafolyte), identification plate (screw)	1285200000
Earthing stud	
Stainless steel 1.4404	1192690000

Note

Max. number of terminals (industry)

Max. number of terminals (industry)	vertical	horizontal
2.5 mm²	2x53	2x34
4 mm²	1x44	2x29
6 mm²	1x33	2x22
10 mm²	1x27	2x17
16 mm²	1x22	1x14
35 mm²	1x15	1x11

Note

*For the enclosure versions with no, one or two gland plates, the horizontal distance between the mounting feet is reduced by 30 mm.
The assembly with modular terminals gives consideration to a distance of 10 mm from the end of each mounting rail.
Order recommendations:
TS 35 mounting rail (screw terminal) WDU 2.5 1020000000 / (tension clamp terminal) ZDU 2.5 1608510000 / (tension clamp terminal) PDU 2.5 1896110000
TS 32 mounting rail (screw terminal) SAK 2.5 0279660000
TS 15 mounting rail (screw terminal) AKZ 2.5 0697160000

Number of cable entries

Number of cable entries	A / B	C / D
M12	20	23
M16	11	13
M20	9	11
M25	4	5
M32	3	4
M40	3	3
M50	2	3
M63	0	0
M75	0	0

Note Our IP 68 brass cable glands are used as the reference for these guideline values.

Dimensions of mounting plate

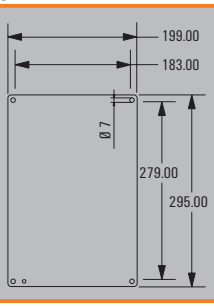

Klippon® TB FS 352620

Depth 200 mm

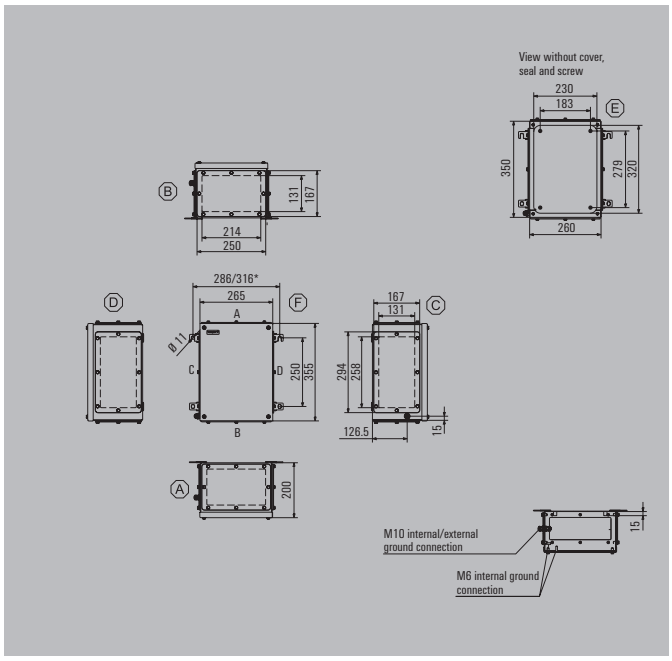

Height/Width/Depth	350 / 260 / 200 mm

Ordering data

Stainless steel 1.4404 316L, electropolished	Order No.
1 gland plate - bottom side (B)	1195960000
2 gland plates - top and bottom sides (A & B)	1195970000
3 gland plates - bottom, left and right sides (B, C & D)	1195980000
4 gland plates - top, bottom, left and right sides (A, B, C & D)	1195990000
Note	Painted sheet steel enclosure available on request. The colours of painted enclosures may vary under certain circumstances.

Accessories

Mounting plates and fastening screws	Order No.
Steel sheet, zinc plated	1193970000
Stainless steel 1.4301	1193840000
With hole pattern, natural stainless steel 1.4301	1257680000
Fastening screws for mounting plates	0642600000
Fastening screws for terminal rails	1274150000
Stainless steel spacer M6 x 8, Set of 4	
10 mm length	0935110000
15 mm length	0935120000
20 mm length	0935130000
30 mm length	0935140000
Gland plates and screws - 6 mm	
Top and bottom sides (A & B), electropolished stainless steel 1.4404	1256410000
Left and right sides (C & D), electropolished stainless steel 1.4404	1256420000
Mounting screw, stainless steel 1.4404	1253230000
Label holder	
70 x 70 angled stainless steel 1.4301	1279320000
130x50 stainless steel 1.4301	1283450000
100x25 stainless steel 1.4301	1257640000
Document holder	
For DIN A6 size documents	1252780000
For DIN A5 size documents	1252750000
For DIN A4 size documents	
Set of fixings	
For label holders, rain hoods and document holders (rivet)	1252190000
For plastic (Trafolyte), identification plate (screw)	1285200000
Earthing stud	
Stainless steel 1.4404	1192690000

Note

Max. number of terminals (industry)

Max. number of terminals (industry)	vertical	horizontal
2.5 mm²	2x53	2x34
4 mm²	1x44	2x29
6 mm²	1x33	2x22
10 mm²	1x27	2x17
16 mm²	1x22	1x14
35 mm²	1x15	1x11

Note

*For the enclosure versions with no, one or two gland plates, the horizontal distance between the mounting feet is reduced by 30 mm.
The assembly with modular terminals gives consideration to a distance of 10 mm from the end of each mounting rail.
Order recommendations:
TS 35 mounting rail (screw terminal) WDU 2.5 1020000000 / (tension clamp terminal) ZDU 2.5 1608510000 / (tension clamp terminal) PDU 2.5 1896110000
TS 32 mounting rail (screw terminal) SAK 2.5 0279660000
TS 15 mounting rail (screw terminal) AKZ 2.5 0697160000

Number of cable entries

Number of cable entries	A / B	C / D
M12	33	38
M16	22	26
M20	14	17
M25	12	14
M32	6	7
M40	5	6
M50	2	3
M63	2	2
M75	1	2

Note Our IP 68 brass cable glands are used as the reference for these guideline values.

Dimensions of mounting plate

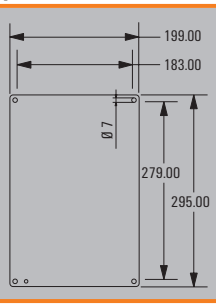

Klippon® TB FS 403015

Depth 150 mm

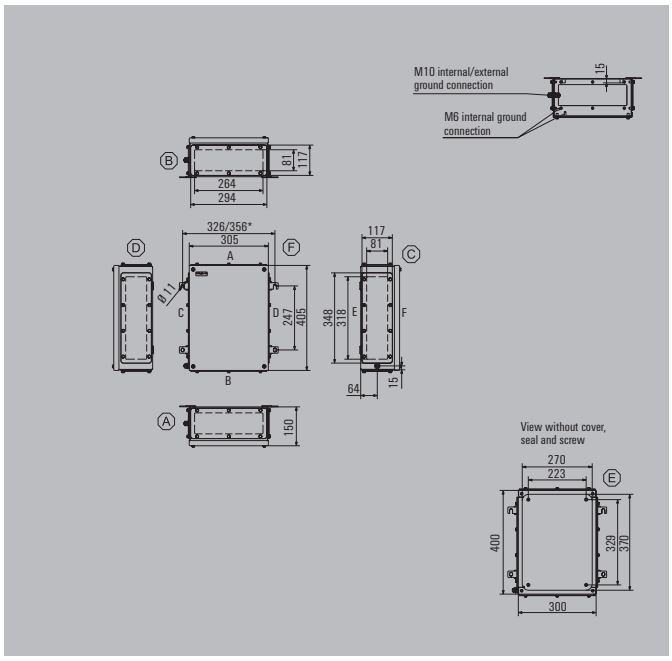

Height/Width/Depth	400 / 300 / 150 mm

Ordering data

Stainless steel 1.4404 316L, electropolished	Order No.
1 gland plate - bottom side (B)	1196010000
2 gland plates - top and bottom sides (A & B)	1196020000
3 gland plates - bottom, left and right sides (B, C & D)	1196030000
4 gland plates - top, bottom, left and right sides (A, B, C & D)	1196040000

Note Painted sheet steel enclosure available on request. The colours of painted enclosures may vary under certain circumstances.

Accessories

Mounting plates and fastening screws	Order No.
Steel sheet, zinc plated	1193980000
Stainless steel 1.4301	1193850000
With hole pattern, natural stainless steel 1.4301	1257690000
Fastening screws for mounting plates	0642600000
Fastening screws for terminal rails	1274150000
Stainless steel spacer M6 x 8, Set of 4	
10 mm length	0935110000
15 mm length	0935120000
20 mm length	0935130000
30 mm length	0935140000
Gland plates and screws - 6 mm	
Top and bottom sides (A & B), electropolished stainless steel 1.4404	1256430000
Left and right sides (C & D), electropolished stainless steel 1.4404	1256440000
Mounting screw, stainless steel 1.4404	1253230000
Label holder	
70 x 70 angled stainless steel 1.4301	1279320000
130x50 stainless steel 1.4301	1283450000
100x25 stainless steel 1.4301	1257640000
Document holder	
For DIN A6 size documents	1252780000
For DIN A5 size documents	1252750000
For DIN A4 size documents	
Set of fixings	
For label holders, rain hoods and document holders (rivet)	1252190000
For plastic (Trafolyte), identification plate (screw)	1285200000
Earthing stud	
Stainless steel 1.4404	1192690000

Note

Max. number of terminals (industry)

Max. number of terminals (industry)	vertical	horizontal
2.5 mm²	2x62	3x42
4 mm²	2x52	3x35
6 mm²	1x39	2x26
10 mm²	1x32	2x21
16 mm²	1x26	2x18
35 mm²	1x20	1x13

Note *For the enclosure versions with no, one or two gland plates, the horizontal distance between the mounting feet is reduced by 30 mm.
The assembly with modular terminals gives consideration to a distance of 10 mm from the end of each mounting rail.
Order recommendations:
TS 35 mounting rail (screw terminal) WDU 2.5 1020000000 / (tension clamp terminal) ZDU 2.5 1608510000 / (tension clamp terminal) PDU 2.5 1896110000
TS 32 mounting rail (screw terminal) SAK 2.5 0279660000
TS 15 mounting rail (screw terminal) AKZ 2.5 0697160000

Number of cable entries

Number of cable entries	A / B	C / D
M12	23	29
M16	13	16
M20	11	13
M25	5	6
M32	4	5
M40	3	4
M50	3	3
M63	0	0
M75	0	0

Note Our IP 68 brass cable glands are used as the reference for these guideline values.

Dimensions of mounting plate

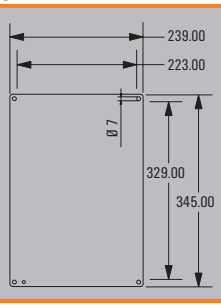

Klippon® TB FS 403020

Depth 200 mm

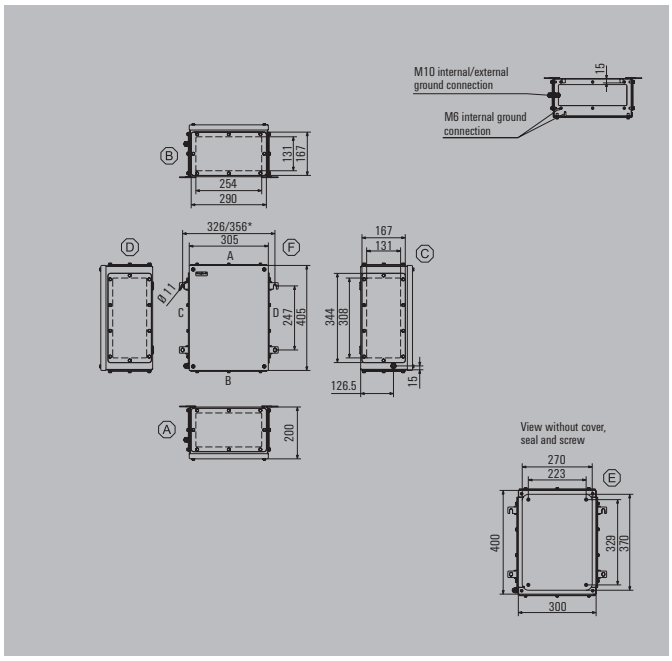

Height/Width/Depth	400 / 300 / 200 mm

Ordering data

Stainless steel 1.4404 316L, electropolished	Order No.
1 gland plate - bottom side (B)	1196060000
2 gland plates - top and bottom sides (A & B)	1196070000
3 gland plates - bottom, left and right sides (B, C & D)	1196080000
4 gland plates - top, bottom, left and right sides (A, B, C & D)	1196090000

Note Painted sheet steel enclosure available on request. The colours of painted enclosures may vary under certain circumstances.

Accessories

Mounting plates and fastening screws	Order No.
Steel sheet, zinc plated	1193980000
Stainless steel 1.4301	1193850000
With hole pattern, natural stainless steel 1.4301	1257690000
Fastening screws for mounting plates	0642600000
Fastening screws for terminal rails	1274150000
Stainless steel spacer M6 x 8, Set of 4	
10 mm length	0935110000
15 mm length	0935120000
20 mm length	0935130000
30 mm length	0935140000
Gland plates and screws - 6 mm	
Top and bottom sides (A & B), electropolished stainless steel 1.4404	1256450000
Left and right sides (C & D), electropolished stainless steel 1.4404	1256470000
Mounting screw, stainless steel 1.4404	1253230000
Label holder	
70 x 70 angled stainless steel 1.4301	1279320000
130x50 stainless steel 1.4301	1283450000
100x25 stainless steel 1.4301	1257640000
Document holder	
For DIN A6 size documents	1252780000
For DIN A5 size documents	1252750000
For DIN A4 size documents	
Set of fixings	
For label holders, rain hoods and document holders (rivet)	1252190000
For plastic (Trafolyte), identification plate (screw)	1285200000
Earthing stud	
Stainless steel 1.4404	1192690000

Note

Max. number of terminals (industry)

Max. number of terminals (industry)	vertical	horizontal
2.5 mm²	2x62	3x42
4 mm²	2x52	3x35
6 mm²	1x39	2x26
10 mm²	1x32	2x21
16 mm²	1x26	2x18
35 mm²	1x20	1x13

Note *For the enclosure versions with no, one or two gland plates, the horizontal distance between the mounting feet is reduced by 30 mm.
The assembly with modular terminals gives consideration to a distance of 10 mm from the end of each mounting rail.
Order recommendations:
TS 35 mounting rail (screw terminal) WDU 2.5 1020000000 / (tension clamp terminal) ZDU 2.5 1608510000 / (tension clamp terminal) PDU 2.5 1896110000
TS 32 mounting rail (screw terminal) SAK 2.5 0279660000
TS 15 mounting rail (screw terminal) AKZ 2.5 0697160000

Number of cable entries

Number of cable entries	A / B	C / D
M12	38	48
M16	26	32
M20	17	20
M25	14	17
M32	7	9
M40	6	7
M50	3	3
M63	2	3
M75	2	2

Note Our IP 68 brass cable glands are used as the reference for these guideline values.

Dimensions of mounting plate

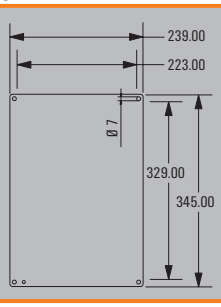

Klippon® TB FS 453815

Depth 150 mm

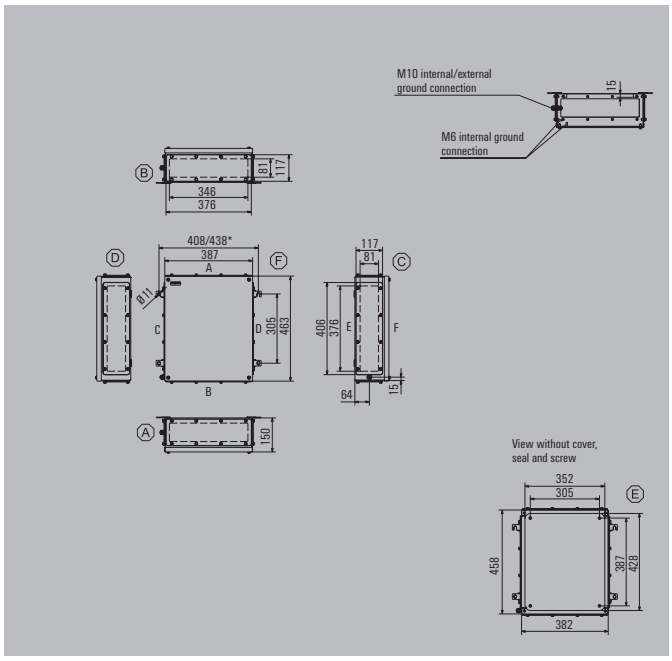

Height/Width/Depth	458 / 382 / 150 mm

Ordering data

Stainless steel 1.4404 316L, electropolished	Order No.
1 gland plate - bottom side (B)	1196110000
2 gland plates - top and bottom sides (A & B)	1196120000
3 gland plates - bottom, left and right sides (B, C & D)	1196130000
4 gland plates - top, bottom, left and right sides (A, B, C & D)	1196140000
Note	Painted sheet steel enclosure available on request. The colours of painted enclosures may vary under certain circumstances.

Accessories

Mounting plates and fastening screws	Order No.
Steel sheet, zinc plated	1193990000
Stainless steel 1.4301	1193860000
With hole pattern, natural stainless steel 1.4301	1257700000
Fastening screws for mounting plates	0642600000
Fastening screws for terminal rails	1274150000
Stainless steel spacer M6 x 8, Set of 4	
10 mm length	0935110000
15 mm length	0935120000
20 mm length	0935130000
30 mm length	0935140000
Gland plates and screws - 6 mm	
Top and bottom sides (A & B), electropolished stainless steel 1.4404	1256480000
Left and right sides (C & D), electropolished stainless steel 1.4404	1256490000
Mounting screw, stainless steel 1.4404	1253230000
Label holder	
70 x 70 angled stainless steel 1.4301	1279320000
130x50 stainless steel 1.4301	1283450000
100x25 stainless steel 1.4301	1257640000
Document holder	
For DIN A6 size documents	1252780000
For DIN A5 size documents	1252750000
For DIN A4 size documents	1252730000
Set of fixings	
For label holders, rain hoods and document holders (rivet)	1252190000
For plastic (Trafolyte), identification plate (screw)	1285200000
Earthing stud	
Stainless steel 1.4404	1192690000

Note

Max. number of terminals (industry)

Max. number of terminals (industry)	vertical	horizontal
2.5 mm²	3x73	4x58
4 mm²	2x62	3x48
6 mm²	2x46	3x36
10 mm²	2x37	2x29
16 mm²	2x31	2x24
35 mm²	1x23	1x18

Note

*For the enclosure versions with no, one or two gland plates, the horizontal distance between the mounting feet is reduced by 30 mm.
The assembly with modular terminals gives consideration to a distance of 10 mm from the end of each mounting rail.
Order recommendations:
TS 35 mounting rail (screw terminal) WDU 2.5 1020000000 / (tension clamp terminal) ZDU 2.5 1608510000 / (tension clamp terminal) PDU 2.5 1896110000
TS 32 mounting rail (screw terminal) SAK 2.5 0279660000
TS 15 mounting rail (screw terminal) AKZ 2.5 0697160000

Number of cable entries

Number of cable entries	A / B	C / D
M12	30	33
M16	17	19
M20	15	16
M25	6	7
M32	5	6
M40	4	5
M50	4	4
M63	0	0
M75	0	0

Note Our IP 68 brass cable glands are used as the reference for these guideline values.

Dimensions of mounting plate

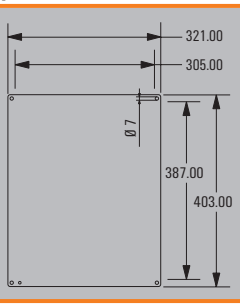

Klippon® TB FS 453820

Depth 200 mm

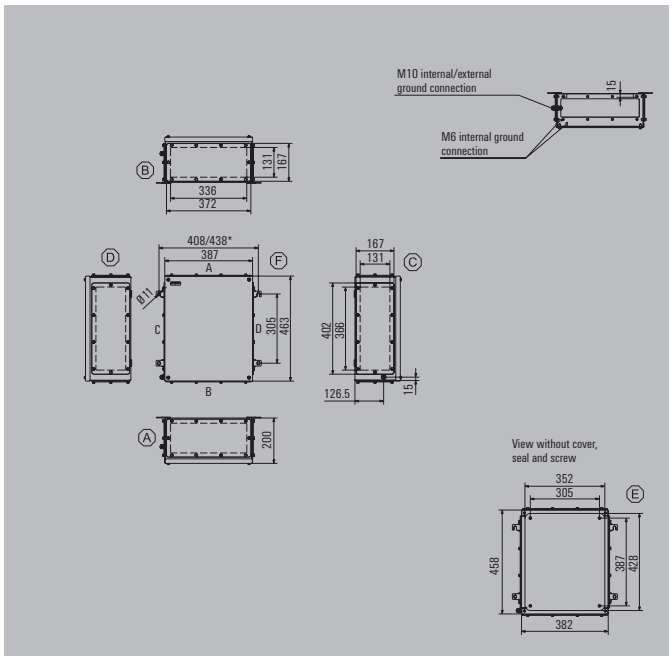

Height/Width/Depth	458 / 382 / 200 mm

Ordering data

Stainless steel 1.4404 316L, electropolished	Order No.
1 gland plate - bottom side (B)	1196160000
2 gland plates - top and bottom sides (A & B)	1196170000
3 gland plates - bottom, left and right sides (B, C & D)	1196180000
4 gland plates - top, bottom, left and right sides (A, B, C & D)	1196190000

Note Painted sheet steel enclosure available on request. The colours of painted enclosures may vary under certain circumstances.

Accessories

Mounting plates and fastening screws	Order No.
Steel sheet, zinc plated	1193990000
Stainless steel 1.4301	1193860000
With hole pattern, natural stainless steel 1.4301	1257700000
Fastening screws for mounting plates	0642600000
Fastening screws for terminal rails	1274150000
Stainless steel spacer M6 x 8, Set of 4	
10 mm length	0935110000
15 mm length	0935120000
20 mm length	0935130000
30 mm length	0935140000
Gland plates and screws - 6 mm	
Top and bottom sides (A & B), electropolished stainless steel 1.4404	1256510000
Left and right sides (C & D), electropolished stainless steel 1.4404	1256520000
Mounting screw, stainless steel 1.4404	1253230000
Label holder	
70 x 70 angled stainless steel 1.4301	1279320000
130x50 stainless steel 1.4301	1283450000
100x25 stainless steel 1.4301	1257640000
Document holder	
For DIN A6 size documents	1252780000
For DIN A5 size documents	1252750000
For DIN A4 size documents	1252730000
Set of fixings	
For label holders, rain hoods and document holders (rivet)	1252190000
For plastic (Trafolyte), identification plate (screw)	1285200000
Earthing stud	
Stainless steel 1.4404	1192690000

Note

Max. number of terminals (industry)

Max. number of terminals (industry)	vertical	horizontal
2.5 mm²	3x73	4x58
4 mm²	2x62	3x48
6 mm²	2x46	3x36
10 mm²	2x37	2x29
16 mm²	2x31	2x24
35 mm²	1x23	1x18

Note
*For the enclosure versions with no, one or two gland plates, the horizontal distance between the mounting feet is reduced by 30 mm.
The assembly with modular terminals gives consideration to a distance of 10 mm from the end of each mounting rail.
Order recommendations:
TS 35 mounting rail (screw terminal) WDU 2.5 1020000000 / (tension clamp terminal) ZDU 2.5 1608510000 / (tension clamp terminal) PDU 2.5 1896110000
TS 32 mounting rail (screw terminal) SAK 2.5 0279660000
TS 15 mounting rail (screw terminal) AKZ 2.5 0697160000

Number of cable entries

Number of cable entries	A / B	C / D
M12	50	55
M16	34	38
M20	23	24
M25	18	21
M32	10	11
M40	8	9
M50	4	4
M63	3	3
M75	2	3

Note Our IP 68 brass cable glands are used as the reference for these guideline values.

Dimensions of mounting plate

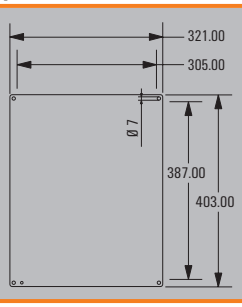

Klippon® TB FS 484815

Depth 150 mm

Height/Width/Depth	480 / 480 / 150 mm

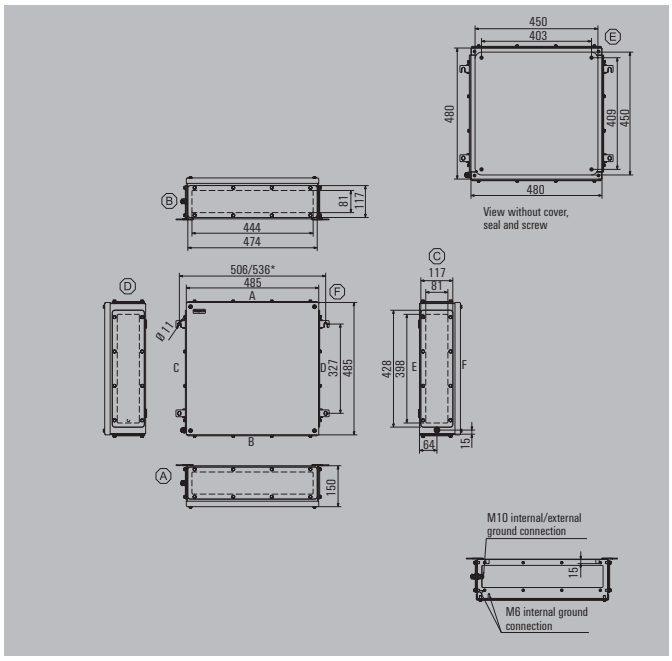

Ordering data

Stainless steel 1.4404 316L, electropolished	Order No.
1 gland plate - bottom side (B)	1196210000
2 gland plates - top and bottom sides (A & B)	1196220000
3 gland plates - bottom, left and right sides (B, C & D)	1196230000
4 gland plates - top, bottom, left and right sides (A, B, C & D)	1196240000
Note	Painted sheet steel enclosure available on request. The colours of painted enclosures may vary under certain circumstances.

Accessories

Mounting plates and fastening screws	Order No.
Steel sheet, zinc plated	1194000000
Stainless steel 1.4301	1193870000
With hole pattern, natural stainless steel 1.4301	1257710000
Fastening screws for mounting plates	0642600000
Fastening screws for terminal rails	1274150000
Stainless steel spacer M6 x 8, Set of 4	
10 mm length	0935110000
15 mm length	0935120000
20 mm length	0935130000
30 mm length	0935140000
Gland plates and screws - 6 mm	
Top and bottom sides (A & B), electropolished stainless steel 1.4404	1256530000
Left and right sides (C & D), electropolished stainless steel 1.4404	1256540000
Mounting screw, stainless steel 1.4404	1253230000
Label holder	
70 x 70 angled stainless steel 1.4301	1279320000
130x50 stainless steel 1.4301	1283450000
100x25 stainless steel 1.4301	1257640000
Document holder	
For DIN A6 size documents	1252780000
For DIN A5 size documents	1252750000
For DIN A4 size documents	1252730000
Set of fixings	
For label holders, rain hoods and document holders (rivet)	1252190000
For plastic (Trafolyte), identification plate (screw)	1285200000
Earthing stud	
Stainless steel 1.4404	1192690000

Note

Max. number of terminals (industry)

Max. number of terminals (industry)	vertical	horizontal
2.5 mm²	4x78	4x77
4 mm²	3x65	3x64
6 mm²	3x49	3x48
10 mm²	2x39	3x39
16 mm²	2x33	2x32
35 mm²	1x25	2x24

Note

*For the enclosure versions with no, one or two gland plates, the horizontal distance between the mounting feet is reduced by 30 mm.
The assembly with modular terminals gives consideration to a distance of 10 mm from the end of each mounting rail.
Order recommendations:
TS 35 mounting rail (screw terminal) WDU 2.5 1020000000 / (tension clamp terminal) ZDU 2.5 1608510000 / (tension clamp terminal) PDU 2.5 1896110000
TS 32 mounting rail (screw terminal) SAK 2.5 0279660000
TS 15 mounting rail (screw terminal) AKZ 2.5 0697160000

Number of cable entries

Number of cable entries	A / B	C / D
M12	39	36
M16	22	20
M20	19	17
M25	8	7
M32	7	6
M40	6	5
M50	5	4
M63	0	0
M75	0	0

Note Our IP 68 brass cable glands are used as the reference for these guideline values.

Dimensions of mounting plate

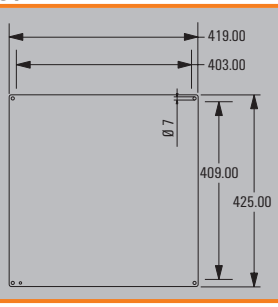

Klippon® TB FS 484820

Depth 200 mm

Height/Width/Depth	480 / 480 / 200 mm

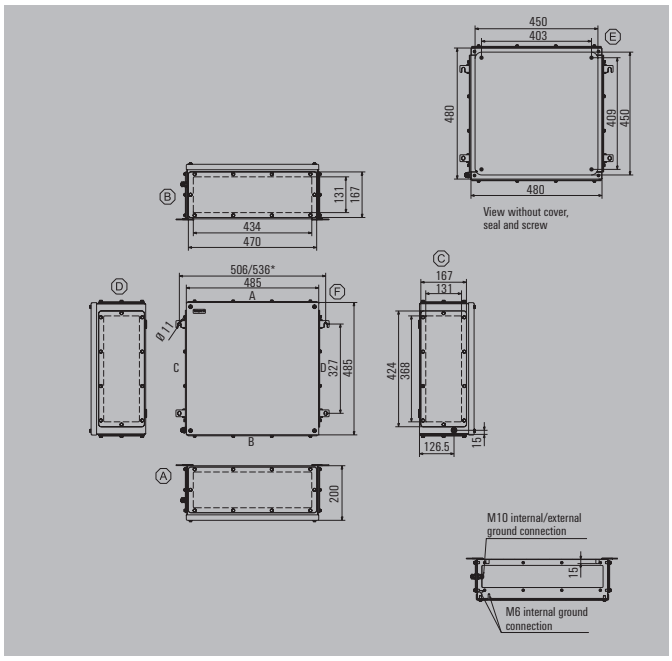

Ordering data

Stainless steel 1.4404 316L, electropolished	Order No.
1 gland plate - bottom side (B)	1196260000
2 gland plates - top and bottom sides (A & B)	1196270000
3 gland plates - bottom, left and right sides (B, C & D)	1196280000
4 gland plates - top, bottom, left and right sides (A, B, C & D)	1196290000
Note	Painted sheet steel enclosure available on request. The colours of painted enclosures may vary under certain circumstances.

Accessories

Mounting plates and fastening screws	Order No.
Steel sheet, zinc plated	1194000000
Stainless steel 1.4301	1193870000
With hole pattern, natural stainless steel 1.4301	1257710000
Fastening screws for mounting plates	0642600000
Fastening screws for terminal rails	1274150000
Stainless steel spacer M6 x 8, Set of 4	
10 mm length	0935110000
15 mm length	0935120000
20 mm length	0935130000
30 mm length	0935140000
Gland plates and screws - 6 mm	
Top and bottom sides (A & B), electropolished stainless steel 1.4404	1256550000
Left and right sides (C & D), electropolished stainless steel 1.4404	1256560000
Mounting screw, stainless steel 1.4404	1253230000
Label holder	
70 x 70 angled stainless steel 1.4301	1279320000
130x50 stainless steel 1.4301	1283450000
100x25 stainless steel 1.4301	1257640000
Document holder	
For DIN A6 size documents	1252780000
For DIN A5 size documents	1252750000
For DIN A4 size documents	1252730000
Set of fixings	
For label holders, rain hoods and document holders (rivet)	1252190000
For plastic (Trafolyte), identification plate (screw)	1285200000
Earthing stud	
Stainless steel 1.4404	1192690000

Note

Max. number of terminals (industry)

Max. number of terminals (industry)	vertical	horizontal
2.5 mm²	4x78	4x77
4 mm²	3x65	3x64
6 mm²	3x49	3x48
10 mm²	2x39	3x39
16 mm²	2x33	2x32
35 mm²	1x25	2x24

Note

*For the enclosure versions with no, one or two gland plates, the horizontal distance between the mounting feet is reduced by 30 mm.
The assembly with modular terminals gives consideration to a distance of 10 mm from the end of each mounting rail.
Order recommendations:
TS 35 mounting rail (screw terminal) WDU 2.5 1020000000 / (tension clamp terminal) ZDU 2.5 1608510000 / (tension clamp terminal) PDU 2.5 1896110000
TS 32 mounting rail (screw terminal) SAK 2.5 0279660000
TS 15 mounting rail (screw terminal) AKZ 2.5 0697160000

Number of cable entries

Number of cable entries	A / B	C / D
M12	65	60
M16	44	40
M20	29	26
M25	24	21
M32	13	12
M40	11	10
M50	5	4
M63	4	4
M75	3	3

Note Our IP 68 brass cable glands are used as the reference for these guideline values.

Dimensions of mounting plate

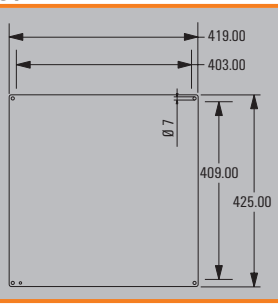

Klippon® TB FS 553515

Depth 150 mm

Height/Width/Depth	550 / 350 / 150 mm

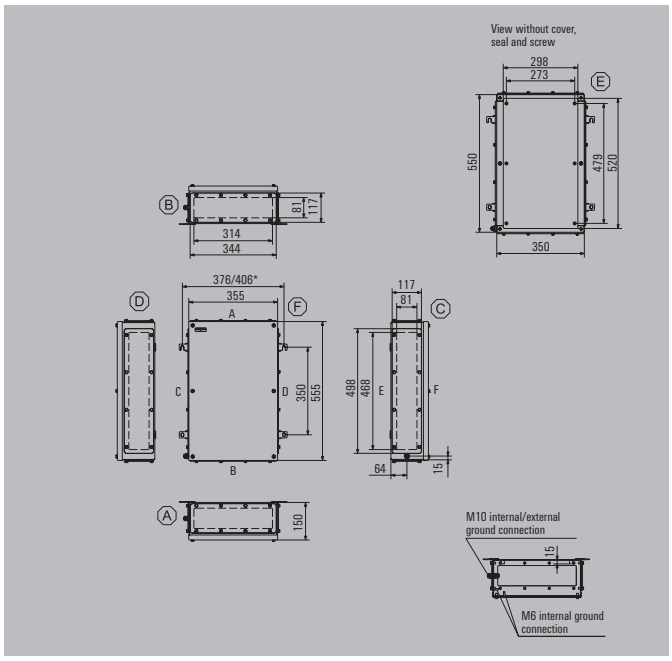

Ordering data

Stainless steel 1.4404 316L, electropolished	Order No.
1 gland plate - bottom side (B)	1196310000
2 gland plates - top and bottom sides (A & B)	1196320000
3 gland plates - bottom, left and right sides (B, C & D)	1196330000
4 gland plates - top, bottom, left and right sides (A, B, C & D)	1196340000
Note	Painted sheet steel enclosure available on request. The colours of painted enclosures may vary under certain circumstances.

Accessories

Mounting plates and fastening screws	Order No.
Steel sheet, zinc plated	1194010000
Stainless steel 1.4301	1193880000
With hole pattern, natural stainless steel 1.4301	1257720000
Fastening screws for mounting plates	0642600000
Fastening screws for terminal rails	1274150000
Stainless steel spacer M6 x 8, Set of 4	
10 mm length	0935110000
15 mm length	0935120000
20 mm length	0935130000
30 mm length	0935140000
Gland plates and screws - 6 mm	
Top and bottom sides (A & B), electropolished stainless steel 1.4404	1256570000
Left and right sides (C & D), electropolished stainless steel 1.4404	1256580000
Mounting screw, stainless steel 1.4404	1253230000
Label holder	
70 x 70 angled stainless steel 1.4301	1279320000
130x50 stainless steel 1.4301	1283450000
100x25 stainless steel 1.4301	1257640000
Document holder	
For DIN A6 size documents	1252780000
For DIN A5 size documents	1252750000
For DIN A4 size documents	1252730000
Set of fixings	
For label holders, rain hoods and document holders (rivet)	1252190000
For plastic (Trafolyte), identification plate (screw)	1285200000
Earthing stud	
Stainless steel 1.4404	1192690000

Note

Max. number of terminals (industry)

Max. number of terminals (industry)	vertical	horizontal
2.5 mm²	2x91	4x52
4 mm²	2x76	4x43
6 mm²	2x58	4x32
10 mm²	2x46	3x26
16 mm²	1x39	3x22
35 mm²	1x29	2x16

Note

*For the enclosure versions with no, one or two gland plates, the horizontal distance between the mounting feet is reduced by 30 mm.
The assembly with modular terminals gives consideration to a distance of 10 mm from the end of each mounting rail.
Order recommendations:
TS 35 mounting rail (screw terminal) WDU 2.5 1020000000 / (tension clamp terminal) ZDU 2.5 1608510000 / (tension clamp terminal) PDU 2.5 1896110000
TS 32 mounting rail (screw terminal) SAK 2.5 0279660000
TS 15 mounting rail (screw terminal) AKZ 2.5 0697160000

Number of cable entries

Number of cable entries	A / B	C / D
M12	27	42
M16	15	24
M20	13	20
M25	6	9
M32	5	7
M40	4	6
M50	3	5
M63	0	0
M75	0	0

Note Our IP 68 brass cable glands are used as the reference for these guideline values.

Dimensions of mounting plate

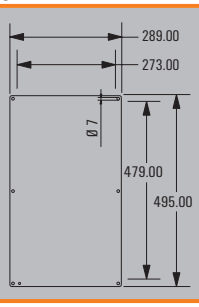

Klippon® TB FS 553520

Depth 200 mm

Height/Width/Depth	550 / 350 / 200 mm

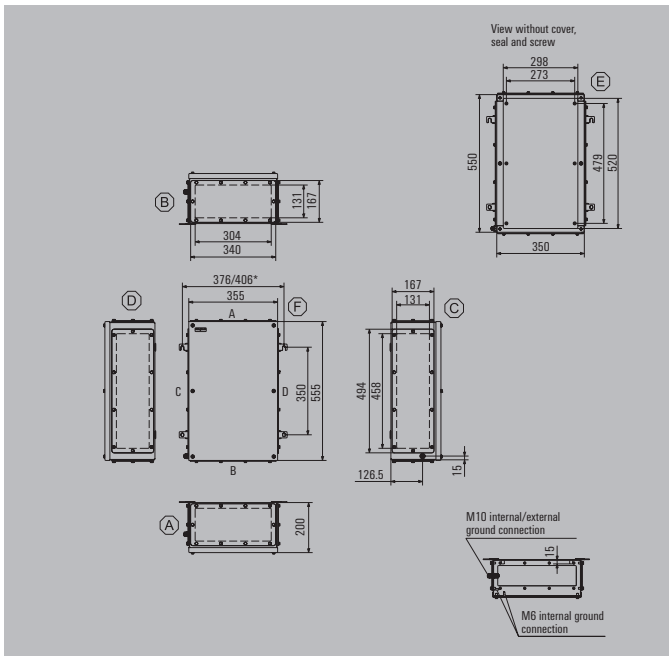

Ordering data

Stainless steel 1.4404 316L, electropolished	Order No.
1 gland plate - bottom side (B)	1196360000
2 gland plates - top and bottom sides (A & B)	1196370000
3 gland plates - bottom, left and right sides (B, C & D)	1196380000
4 gland plates - top, bottom, left and right sides (A, B, C & D)	1196390000
Note	Painted sheet steel enclosure available on request. The colours of painted enclosures may vary under certain circumstances.

Accessories

Mounting plates and fastening screws	Order No.
Steel sheet, zinc plated	1194010000
Stainless steel 1.4301	1193880000
With hole pattern, natural stainless steel 1.4301	1257720000
Fastening screws for mounting plates	0642600000
Fastening screws for terminal rails	1274150000
Stainless steel spacer M6 x 8, Set of 4	
10 mm length	0935110000
15 mm length	0935120000
20 mm length	0935130000
30 mm length	0935140000
Gland plates and screws - 6 mm	
Top and bottom sides (A & B), electropolished stainless steel 1.4404	1256590000
Left and right sides (C & D), electropolished stainless steel 1.4404	1256610000
Mounting screw, stainless steel 1.4404	1253230000
Label holder	
70 x 70 angled stainless steel 1.4301	1279320000
130x50 stainless steel 1.4301	1283450000
100x25 stainless steel 1.4301	1257640000
Document holder	
For DIN A6 size documents	1252780000
For DIN A5 size documents	1252750000
For DIN A4 size documents	1252730000
Set of fixings	
For label holders, rain hoods and document holders (rivet)	1252190000
For plastic (Trafolyte), identification plate (screw)	1285200000
Earthing stud	
Stainless steel 1.4404	1192690000

Note

Max. number of terminals (industry)

Max. number of terminals (industry)	vertical	horizontal
2.5 mm²	2x91	4x52
4 mm²	2x76	4x43
6 mm²	2x58	4x32
10 mm²	2x46	3x26
16 mm²	1x39	3x22
35 mm²	1x29	2x16

Note

*For the enclosure versions with no, one or two gland plates, the horizontal distance between the mounting feet is reduced by 30 mm.
The assembly with modular terminals gives consideration to a distance of 10 mm from the end of each mounting rail.
Order recommendations:
TS 35 mounting rail (screw terminal) WDU 2.5 1020000000 / (tension clamp terminal) ZDU 2.5 1608510000 / (tension clamp terminal) PDU 2.5 1896110000
TS 32 mounting rail (screw terminal) SAK 2.5 0279660000
TS 15 mounting rail (screw terminal) AKZ 2.5 0697160000

Number of cable entries

Number of cable entries	A / B	C / D
M12	45	70
M16	30	48
M20	20	30
M25	17	26
M32	9	14
M40	7	12
M50	3	5
M63	3	4
M75	2	3

Note Our IP 68 brass cable glands are used as the reference for these guideline values.

Dimensions of mounting plate

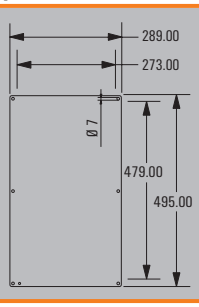

Klippon® TB FS 624515

Depth 150 mm

Height/Width/Depth	620 / 450 / 150 mm

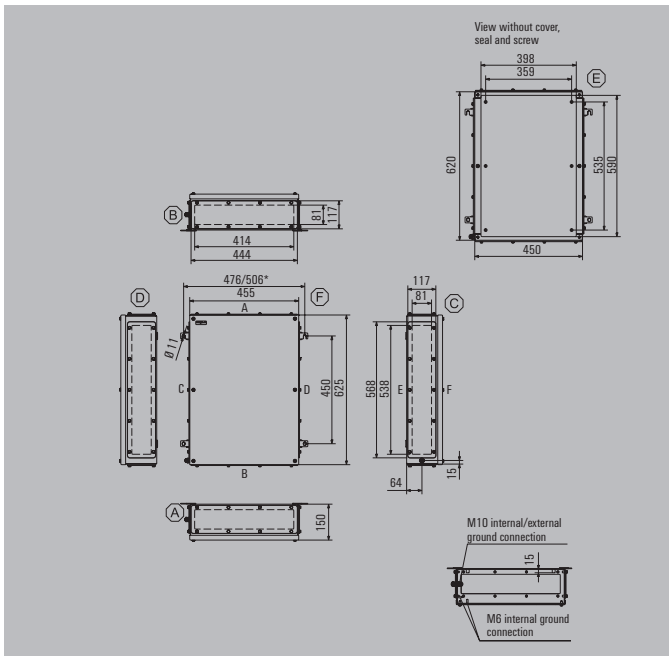

Ordering data

Stainless steel 1.4404 316L, electropolished	Order No.
1 gland plate - bottom side (B)	1196410000
2 gland plates - top and bottom sides (A & B)	1196420000
3 gland plates - bottom, left and right sides (B, C & D)	1196430000
4 gland plates - top, bottom, left and right sides (A, B, C & D)	1196440000
Note	Painted sheet steel enclosure available on request. The colours of painted enclosures may vary under certain circumstances.

Accessories

Mounting plates and fastening screws	Order No.
Steel sheet, zinc plated	1194020000
Stainless steel 1.4301	1193890000
With hole pattern, natural stainless steel 1.4301	1257740000
Fastening screws for mounting plates	0642600000
Fastening screws for terminal rails	1274150000
Stainless steel spacer M6 x 8, Set of 4	
10 mm length	0935110000
15 mm length	0935120000
20 mm length	0935130000
30 mm length	0935140000
Gland plates and screws - 6 mm	
Top and bottom sides (A & B), electropolished stainless steel 1.4404	1256620000
Left and right sides (C & D), electropolished stainless steel 1.4404	1256630000
Mounting screw, stainless steel 1.4404	1253230000
Label holder	
70 x 70 angled stainless steel 1.4301	1279320000
130x50 stainless steel 1.4301	1283450000
100x25 stainless steel 1.4301	1257640000
Document holder	
For DIN A6 size documents	1252780000
For DIN A5 size documents	1252750000
For DIN A4 size documents	1252730000
Set of fixings	
For label holders, rain hoods and document holders (rivet)	1252190000
For plastic (Trafolyte), identification plate (screw)	1285200000
Earthing stud	
Stainless steel 1.4404	1192690000

Note

Max. number of terminals (industry)

Max. number of terminals (industry)	vertical	horizontal
2.5 mm²	3x105	5x71
4 mm²	3x88	5x59
6 mm²	3x66	4x45
10 mm²	2x53	4x36
16 mm²	2x44	3x30
35 mm²	1x33	2x22

Note

*For the enclosure versions with no, one or two gland plates, the horizontal distance between the mounting feet is reduced by 30 mm.
The assembly with modular terminals gives consideration to a distance of 10 mm from the end of each mounting rail.
Order recommendations:
TS 35 mounting rail (screw terminal) WDU 2.5 1020000000 / (tension clamp terminal) ZDU 2.5 1608510000 / (tension clamp terminal) PDU 2.5 1896110000
TS 32 mounting rail (screw terminal) SAK 2.5 0279660000
TS 15 mounting rail (screw terminal) AKZ 2.5 0697160000

Number of cable entries

Number of cable entries	A / B	C / D
M12	38	48
M16	21	27
M20	18	24
M25	8	10
M32	6	9
M40	5	7
M50	4	6
M63	0	0
M75	0	0

Note Our IP 68 brass cable glands are used as the reference for these guideline values.

Dimensions of mounting plate

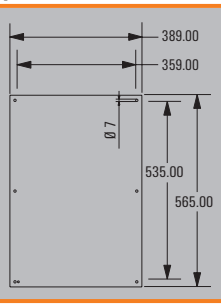

Klippon® TB FS 624520

Depth 200 mm

Height/Width/Depth	620 / 450 / 200 mm

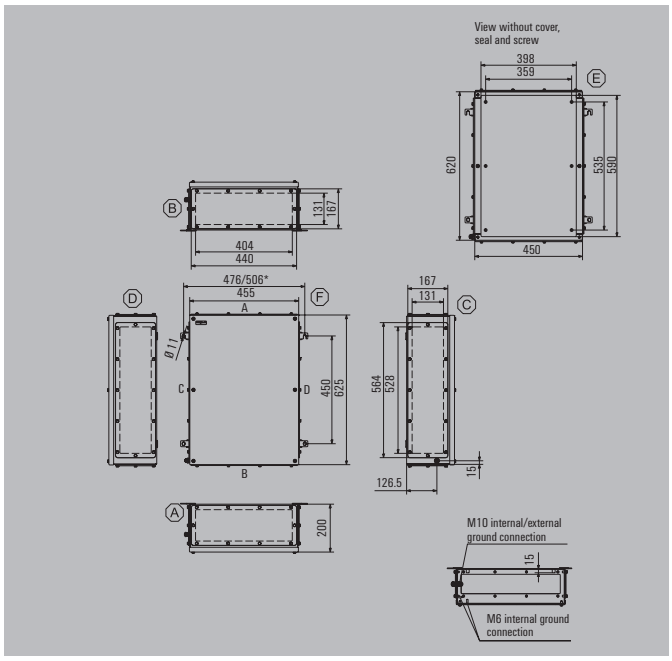

Ordering data

Stainless steel 1.4404 316L, electropolished	Order No.
1 gland plate - bottom side (B)	1196460000
2 gland plates - top and bottom sides (A & B)	1196470000
3 gland plates - bottom, left and right sides (B, C & D)	1196480000
4 gland plates - top, bottom, left and right sides (A, B, C & D)	1196490000
Note	Painted sheet steel enclosure available on request. The colours of painted enclosures may vary under certain circumstances.

Accessories

Mounting plates and fastening screws	Order No.
Steel sheet, zinc plated	1194020000
Stainless steel 1.4301	1193890000
With hole pattern, natural stainless steel 1.4301	1257740000
Fastening screws for mounting plates	0642600000
Fastening screws for terminal rails	1274150000
Stainless steel spacer M6 x 8, Set of 4	
10 mm length	0935110000
15 mm length	0935120000
20 mm length	0935130000
30 mm length	0935140000
Gland plates and screws - 6 mm	
Top and bottom sides (A & B), electropolished stainless steel 1.4404	1256640000
Left and right sides (C & D), electropolished stainless steel 1.4404	1256650000
Mounting screw, stainless steel 1.4404	1253230000
Label holder	
70 x 70 angled stainless steel 1.4301	1279320000
130x50 stainless steel 1.4301	1283450000
100x25 stainless steel 1.4301	1257640000
Document holder	
For DIN A6 size documents	1252780000
For DIN A5 size documents	1252750000
For DIN A4 size documents	1252730000
Set of fixings	
For label holders, rain hoods and document holders (rivet)	1252190000
For plastic (Trafolyte), identification plate (screw)	1285200000
Earthing stud	
Stainless steel 1.4404	1192690000

Note

Max. number of terminals (industry)

Max. number of terminals (industry)	vertical	horizontal
2.5 mm²	3x105	5x71
4 mm²	3x88	5x59
6 mm²	3x66	4x45
10 mm²	2x53	4x36
16 mm²	2x44	3x30
35 mm²	1x33	2x22

Note

*For the enclosure versions with no, one or two gland plates, the horizontal distance between the mounting feet is reduced by 30 mm.
The assembly with modular terminals gives consideration to a distance of 10 mm from the end of each mounting rail.
Order recommendations:
TS 35 mounting rail (screw terminal) WDU 2.5 1020000000 / (tension clamp terminal) ZDU 2.5 1608510000 / (tension clamp terminal) PDU 2.5 1896110000
TS 32 mounting rail (screw terminal) SAK 2.5 0279660000
TS 15 mounting rail (screw terminal) AKZ 2.5 0697160000

Number of cable entries

Number of cable entries	A / B	C / D
M12	63	80
M16	42	54
M20	27	36
M25	23	30
M32	12	17
M40	10	14
M50	4	6
M63	4	5
M75	3	4

Note Our IP 68 brass cable glands are used as the reference for these guideline values.

Dimensions of mounting plate

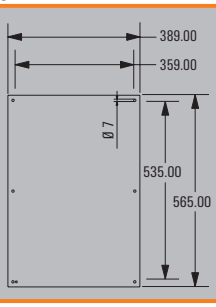

Klippon® TB FS 765015

Depth 150 mm

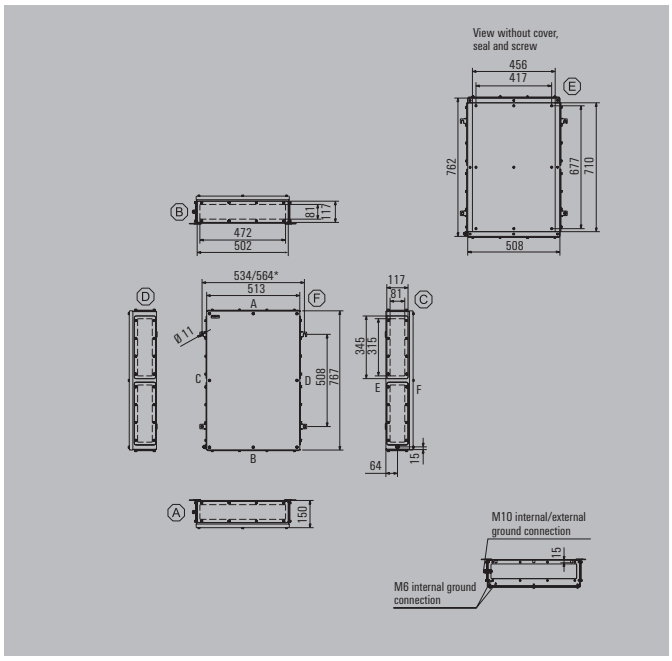

Height/Width/Depth	762 / 508 / 150 mm

Ordering data

Stainless steel 1.4404 316L, electropolished	Order No.
1 gland plate - bottom side (B)	1196510000
2 gland plates - top and bottom sides (A & B)	1196520000
3 gland plates - bottom, left and right sides (B, C & D)	1196530000
4 gland plates - top, bottom, left and right sides (A, B, C & D)	1196540000
Note	Painted sheet steel enclosure available on request. The colours of painted enclosures may vary under certain circumstances.

Accessories

Mounting plates and fastening screws	Order No.
Steel sheet, zinc plated	1194030000
Stainless steel 1.4301	1193900000
With hole pattern, natural stainless steel 1.4301	1257750000
Fastening screws for mounting plates	0642600000
Fastening screws for terminal rails	1274150000
Stainless steel spacer M6 x 8, Set of 4	
10 mm length	0935110000
15 mm length	0935120000
20 mm length	0935130000
30 mm length	0935140000
Gland plates and screws - 6 mm	
Top and bottom sides (A & B), electropolished stainless steel 1.4404	1256660000
Left and right sides (C & D), electropolished stainless steel 1.4404	1256670000
Mounting screw, stainless steel 1.4404	1253230000
Label holder	
70 x 70 angled stainless steel 1.4301	1279320000
130x50 stainless steel 1.4301	1283450000
100x25 stainless steel 1.4301	1257640000
Document holder	
For DIN A6 size documents	1252780000
For DIN A5 size documents	1252750000
For DIN A4 size documents	1252730000
Set of fixings	
For label holders, rain hoods and document holders (rivet)	1252190000
For plastic (Trafolyte), identification plate (screw)	1285200000
Earthing stud	
Stainless steel 1.4404	1192690000

Note

Max. number of terminals (industry)

Max. number of terminals (industry)	vertical	horizontal
2.5 mm²	4x132	7x82
4 mm²	4x111	6x69
6 mm²	3x83	5x52
10 mm²	3x67	5x42
16 mm²	2x56	4x35
35 mm²	2x42	3x26

Note

*For the enclosure versions with no, one or two gland plates, the horizontal distance between the mounting feet is reduced by 30 mm.
The assembly with modular terminals gives consideration to a distance of 10 mm from the end of each mounting rail.
Order recommendations:
TS 35 mounting rail (screw terminal) WDU 2.5 1020000000 / (tension clamp terminal) ZDU 2.5 1608510000 / (tension clamp terminal) PDU 2.5 1896110000
TS 32 mounting rail (screw terminal) SAK 2.5 0279660000
TS 15 mounting rail (screw terminal) AKZ 2.5 0697160000

Number of cable entries

Number of cable entries	A / B	C / D
M12	42	58
M16	24	32
M20	21	26
M25	9	12
M32	7	10
M40	6	8
M50	5	6
M63	0	0
M75	0	0

Note Our IP 68 brass cable glands are used as the reference for these guideline values.

Dimensions of mounting plate

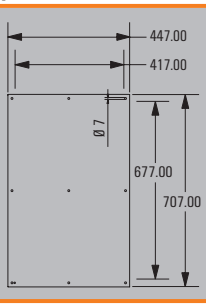

Klippon® TB FS 765020

Depth 200 mm

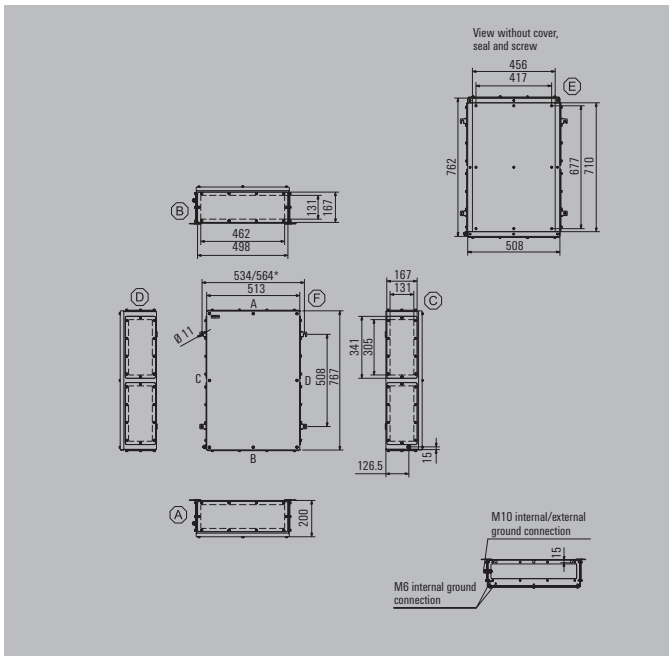

Height/Width/Depth	762 / 508 / 200 mm

Ordering data

Stainless steel 1.4404 316L, electropolished	Order No.
1 gland plate - bottom side (B)	1196560000
2 gland plates - top and bottom sides (A & B)	1196570000
3 gland plates - bottom, left and right sides (B, C & D)	1196580000
4 gland plates - top, bottom, left and right sides (A, B, C & D)	1196590000
Note	Painted sheet steel enclosure available on request. The colours of painted enclosures may vary under certain circumstances.

Accessories

Mounting plates and fastening screws	Order No.
Steel sheet, zinc plated	1194030000
Stainless steel 1.4301	1193900000
With hole pattern, natural stainless steel 1.4301	1257750000
Fastening screws for mounting plates	0642600000
Fastening screws for terminal rails	1274150000
Stainless steel spacer M6 x 8, Set of 4	
10 mm length	0935110000
15 mm length	0935120000
20 mm length	0935130000
30 mm length	0935140000
Gland plates and screws - 6 mm	
Top and bottom sides (A & B), electropolished stainless steel 1.4404	1256680000
Left and right sides (C & D), electropolished stainless steel 1.4404	1256690000
Mounting screw, stainless steel 1.4404	1253230000
Label holder	
70 x 70 angled stainless steel 1.4301	1279320000
130x50 stainless steel 1.4301	1283450000
100x25 stainless steel 1.4301	1257640000
Document holder	
For DIN A6 size documents	1252780000
For DIN A5 size documents	1252750000
For DIN A4 size documents	1252730000
Set of fixings	
For label holders, rain hoods and document holders (rivet)	1252190000
For plastic (Trafolyte), identification plate (screw)	1285200000
Earthing stud	
Stainless steel 1.4404	1192690000

Note

Max. number of terminals (industry)

Max. number of terminals (industry)	vertical	horizontal
2.5 mm²	4x132	7x82
4 mm²	4x111	6x69
6 mm²	3x83	5x52
10 mm²	3x67	5x42
16 mm²	2x56	4x35
35 mm²	2x42	3x26

Note

*For the enclosure versions with no, one or two gland plates, the horizontal distance between the mounting feet is reduced by 30 mm.
The assembly with modular terminals gives consideration to a distance of 10 mm from the end of each mounting rail.
Order recommendations:
TS 35 mounting rail (screw terminal) WDU 2.5 1020000000 / (tension clamp terminal) ZDU 2.5 1608510000 / (tension clamp terminal) PDU 2.5 1896110000
TS 32 mounting rail (screw terminal) SAK 2.5 0279660000
TS 15 mounting rail (screw terminal) AKZ 2.5 0697160000

Number of cable entries

Number of cable entries	A / B	C / D
M12	70	96
M16	48	64
M20	32	40
M25	26	34
M32	14	18
M40	12	14
M50	5	6
M63	4	6
M75	3	4

Note Our IP 68 brass cable glands are used as the reference for these guideline values.

Dimensions of mounting plate

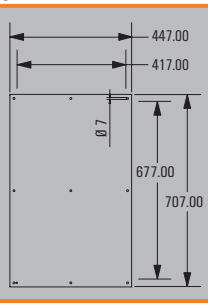

Klippon® TB FS 916115

Depth 150 mm

Height/Width/Depth	914 / 610 / 150 mm

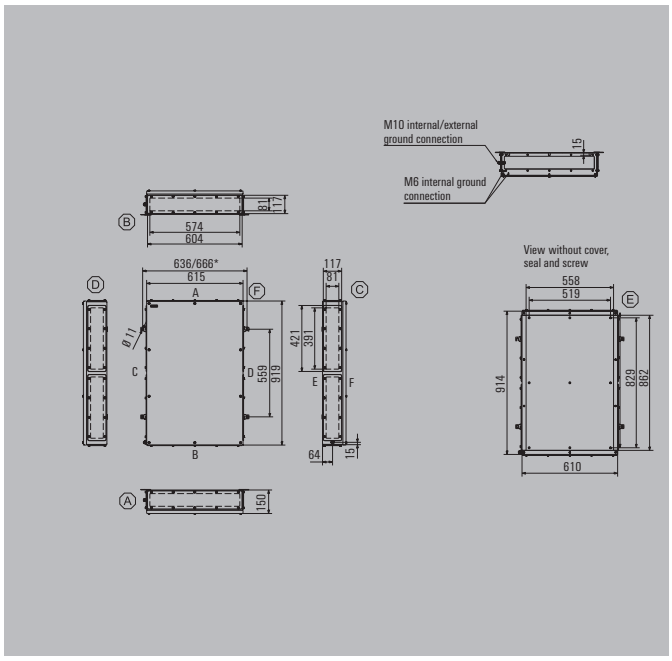

Ordering data

Stainless steel 1.4404 316L, electropolished	Order No.
1 gland plate - bottom side (B)	1196610000
2 gland plates - top and bottom sides (A & B)	1196620000
3 gland plates - bottom, left and right sides (B, C & D)	1196630000
4 gland plates - top, bottom, left and right sides (A, B, C & D)	1196640000

Note Painted sheet steel enclosure available on request. The colours of painted enclosures may vary under certain circumstances.

Accessories

Mounting plates and fastening screws	Order No.
Steel sheet, zinc plated	1194040000
Stainless steel 1.4301	1193910000
With hole pattern, natural stainless steel 1.4301	1257760000
Fastening screws for mounting plates	0642600000
Fastening screws for terminal rails	1274150000
Stainless steel spacer M6 x 8, Set of 4	
10 mm length	0935110000
15 mm length	0935120000
20 mm length	0935130000
30 mm length	0935140000
Gland plates and screws - 6 mm	
Top and bottom sides (A & B), electropolished stainless steel 1.4404	1256710000
Left and right sides (C & D), electropolished stainless steel 1.4404	1256720000
Mounting screw, stainless steel 1.4404	1253230000
Label holder	
70 x 70 angled stainless steel 1.4301	1279320000
130x50 stainless steel 1.4301	1283450000
100x25 stainless steel 1.4301	1257640000
Document holder	
For DIN A6 size documents	1252780000
For DIN A5 size documents	1252750000
For DIN A4 size documents	1252730000
Set of fixings	
For label holders, rain hoods and document holders (rivet)	1252190000
For plastic (Trafolyte), identification plate (screw)	1285200000
Earthing stud	
Stainless steel 1.4404	1192690000

Note

Max. number of terminals (industry)

Max. number of terminals (industry)	vertical	horizontal
2.5 mm²	5x161	8x102
4 mm²	4x135	7x85
6 mm²	4x102	7x64
10 mm²	3x82	6x52
16 mm²	3x68	5x43
35 mm²	2x51	4x32

Note *For the enclosure versions with no, one or two gland plates, the horizontal distance between the mounting feet is reduced by 30 mm.
The assembly with modular terminals gives consideration to a distance of 10 mm from the end of each mounting rail.
Order recommendations:
TS 35 mounting rail (screw terminal) WDU 2.5 1020000000 / (tension clamp terminal) ZDU 2.5 1608510000 / (tension clamp terminal) PDU 2.5 1896110000
TS 32 mounting rail (screw terminal) SAK 2.5 0279660000
TS 15 mounting rail (screw terminal) AKZ 2.5 0697160000

Number of cable entries

Number of cable entries	A / B	C / D
M12	53	70
M16	29	40
M20	25	34
M25	11	14
M32	9	12
M40	8	10
M50	6	8
M63	0	0
M75	0	0

Note Our IP 68 brass cable glands are used as the reference for these guideline values.

Dimensions of mounting plate

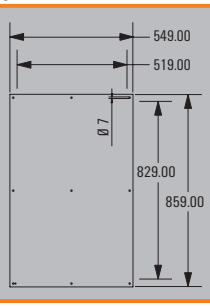

Klippon® TB FS 916120

Depth 200 mm

Height/Width/Depth	914 / 610 / 200 mm

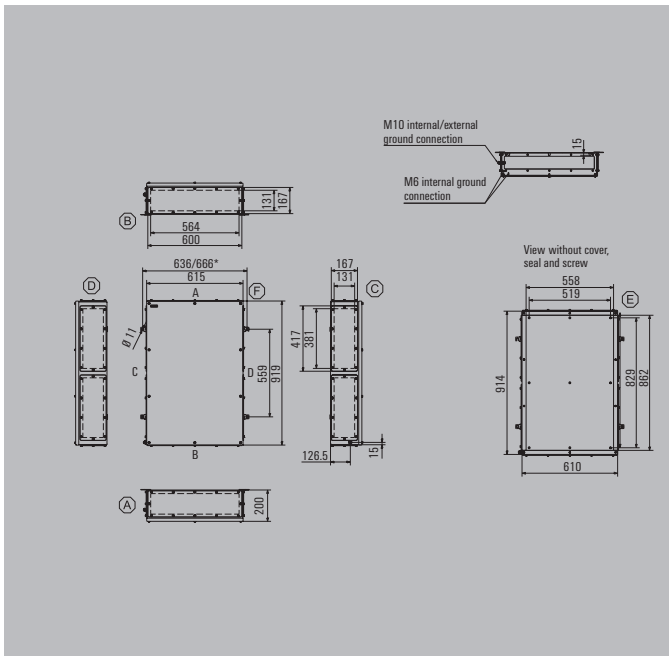

Ordering data

Stainless steel 1.4404 316L, electropolished	Order No.
1 gland plate - bottom side (B)	1196660000
2 gland plates - top and bottom sides (A & B)	1196670000
3 gland plates - bottom, left and right sides (B, C & D)	1196680000
4 gland plates - top, bottom, left and right sides (A, B, C & D)	1196690000

Note Painted sheet steel enclosure available on request. The colours of painted enclosures may vary under certain circumstances.

Accessories

Mounting plates and fastening screws	Order No.
Steel sheet, zinc plated	1194040000
Stainless steel 1.4301	1193910000
With hole pattern, natural stainless steel 1.4301	1257760000
Fastening screws for mounting plates	0642600000
Fastening screws for terminal rails	1274150000
Stainless steel spacer M6 x 8, Set of 4	
10 mm length	0935110000
15 mm length	0935120000
20 mm length	0935130000
30 mm length	0935140000
Gland plates and screws - 6 mm	
Top and bottom sides (A & B), electropolished stainless steel 1.4404	1256730000
Left and right sides (C & D), electropolished stainless steel 1.4404	1256740000
Mounting screw, stainless steel 1.4404	1253230000
Label holder	
70 x 70 angled stainless steel 1.4301	1279320000
130x50 stainless steel 1.4301	1283450000
100x25 stainless steel 1.4301	1257640000
Document holder	
For DIN A6 size documents	1252780000
For DIN A5 size documents	1252750000
For DIN A4 size documents	1252730000
Set of fixings	
For label holders, rain hoods and document holders (rivet)	1252190000
For plastic (Trafolyte), identification plate (screw)	1285200000
Earthing stud	
Stainless steel 1.4404	1192690000

Note

Max. number of terminals (industry)

Max. number of terminals (industry)	vertical	horizontal
2.5 mm²	5x161	8x102
4 mm²	4x135	7x85
6 mm²	4x102	7x64
10 mm²	3x82	6x52
16 mm²	3x68	5x43
35 mm²	2x51	4x32

Note *For the enclosure versions with no, one or two gland plates, the horizontal distance between the mounting feet is reduced by 30 mm.
The assembly with modular terminals gives consideration to a distance of 10 mm from the end of each mounting rail.
Order recommendations:
TS 35 mounting rail (screw terminal) WDU 2.5 1020000000 / (tension clamp terminal) ZDU 2.5 1608510000 / (tension clamp terminal) PDU 2.5 1896110000
TS 32 mounting rail (screw terminal) SAK 2.5 0279660000
TS 15 mounting rail (screw terminal) AKZ 2.5 0697160000

Number of cable entries

Number of cable entries	A / B	C / D
M12	88	116
M16	58	80
M20	38	52
M25	33	42
M32	18	24
M40	15	20
M50	6	8
M63	5	6
M75	4	6

Note Our IP 68 brass cable glands are used as the reference for these guideline values.

Dimensions of mounting plate

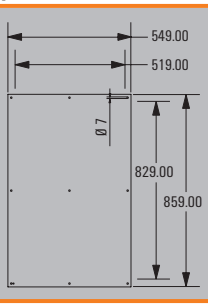

Klippon® TB FS 987426

Depth **200 mm**

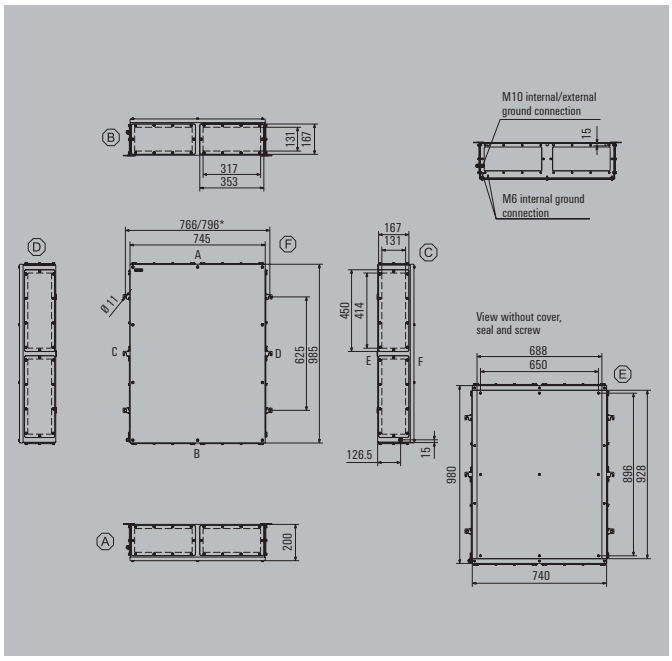

Height/Width/Depth	980 / 740 / 200 mm

Ordering data

Stainless steel 1.4404 316L, electropolished	Order No.
1 gland plate - bottom side (B)	1196710000
2 gland plates - top and bottom sides (A & B)	1196720000
3 gland plates - bottom, left and right sides (B, C & D)	1196730000
4 gland plates - top, bottom, left and right sides (A, B, C & D)	1196740000
Note	Painted sheet steel enclosure available on request. The colours of painted enclosures may vary under certain circumstances.

Accessories

Mounting plates and fastening screws	Order No.
Steel sheet, zinc plated	1194050000
Stainless steel 1.4301	1193920000
With hole pattern, natural stainless steel 1.4301	1257770000
Fastening screws for mounting plates	0642600000
Fastening screws for terminal rails	1274150000
Stainless steel spacer M6 x 8, Set of 4	
10 mm length	0935110000
15 mm length	0935120000
20 mm length	0935130000
30 mm length	0935140000
Gland plates and screws - 6 mm	
Top and bottom sides (A & B), electropolished stainless steel 1.4404	1256750000
Left and right sides (C & D), electropolished stainless steel 1.4404	1256760000
Mounting screw, stainless steel 1.4404	1253230000
Label holder	
70 x 70 angled stainless steel 1.4301	1279320000
130x50 stainless steel 1.4301	1283450000
100x25 stainless steel 1.4301	1257640000
Document holder	
For DIN A6 size documents	1252780000
For DIN A5 size documents	1252750000
For DIN A4 size documents	1252730000
Set of fixings	
For label holders, rain hoods and document holders (rivet)	1252190000
For plastic (Trafolyte), identification plate (screw)	1285200000
Earthing stud	
Stainless steel 1.4404	1192690000

Note

Max. number of terminals (industry)

Max. number of terminals (industry)	vertical	horizontal
2.5 mm²	6x174	9x127
4 mm²	6x146	8x106
6 mm²	5x110	7x80
10 mm²	4x88	6x64
16 mm²	4x74	5x54
35 mm²	3x55	4x40

Note

*For the enclosure versions with no, one or two gland plates, the horizontal distance between the mounting feet is reduced by 30 mm.
The assembly with modular terminals gives consideration to a distance of 10 mm from the end of each mounting rail.
Order recommendations:
TS 35 mounting rail (screw terminal) WDU 2.5 1020000000 / (tension clamp terminal) ZDU 2.5 1608510000 / (tension clamp terminal) PDU 2.5 1896110000
TS 32 mounting rail (screw terminal) SAK 2.5 0279660000
TS 15 mounting rail (screw terminal) AKZ 2.5 0697160000

Number of cable entries

Number of cable entries	A / B	C / D
M12	96	126
M16	64	84
M20	42	54
M25	36	48
M32	20	26
M40	16	22
M50	6	10
M63	6	8
M75	4	6
Note	Our IP 68 brass cable glands are used as the reference for these guideline values.	

Dimensions of mounting plate

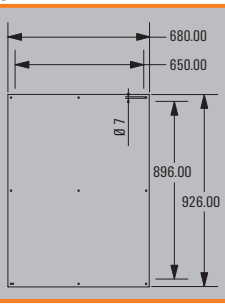

Klippon® TBi QL - Quarter Lock

Stainless steel enclosures
for use within harsh industrial environments

Even under moderate environmental conditions, there is an increasing need for complex, individual automated solutions. A harsh industrial environment places additional, heavy demands on applications and determines the design of the industrial enclosures to meet these demands. With complete protection and excellent durability, our Klippon® TBi stainless steel enclosures offer the best protection for the components inside them. Its electro-polished surface makes the enclosure extraordinarily resistant to corrosion.

- Available in 11 sizes and 2 depths
- Operating temperature range -40 °C to +85 °C
- Impact resistance of 10 J Industrial application
- Dedicated internal mounting support bracket for fixing terminal rail or mounting plates with self forming screws
- External Earth point – suitable for M6 threaded screw
- Concealed hinges
- Internal earth stud – M6 screw fitted to enclosure lid and base
- Supplied in 0 or 1 gland plate version
- Direct enclosure mounting is provided via the fixing positions placed into the rear of the enclosure
- Mounting feet in stainless steel are optionally available and can be rotated 90°
- Dust and moisture channel
- Double-bit locking system

Our assembly service can supply these enclosure preassembled with terminals and cable glands according to customer requirements.

NEW

c UL us LISTED

Overview of enclosures

Ordering data

Description	Height x width x depth in mm	0 Gland Plate	1 Gland Plate (below)
KTBi QL 302015 S2E_*	300 x 200 x 150	1197430000	1197440000
KTBi QL 303015 S2E_*	300 x 300 x 150	1197450000	1197460000
KTBi QL 303022 S2E_*	300 x 300 x 220	1197470000	1197480000
KTBi QL 403015 S2E_*	400 x 300 x 150	1197490000	1197500000
KTBi QL 403022 S2E_*	400 x 300 x 220	1197510000	1197520000
KTBi QL 404022 S2E_*	400 x 400 x 220	1197530000	1197540000
KTBi QL 504022 S2E_*	500 x 400 x 220	1197550000	1197560000
KTBi QL 505022 S2E_*	500 x 500 x 220	1197570000	1197580000
KTBi QL 604022 S2E_*	600 x 400 x 220	1197590000	1197600000
KTBi QL 606022 S2E_*	600 x 600 x 220	1197610000	1197620000
KTBi QL 806022 S2E_*	800 x 600 x 220	1197630000	1197640000
Note	*Placeholder for the number of gland plates (0 or 1)		

Technical Overview

Features

• Available in 11 sizes and 2 standard depths
• Welded mounting bracket for securing the mounting plate or mounting rail by means of self-tapping screws
• External earth - M6 earth tab rivet
• Concealed hinges
• M6 earthing bolt welded in the cover and base of the enclosure
• Available with 0 or 1 flange plates
• Optimised laser welding, high quality standard
• Direct mounting of the enclosure with rear mounting holes
• Mounting feet in stainless steel are optionally available, and can be rotated by 90°
• Moisture and dust channel
• Double-bit locking system
• Permanent labelling of items
• Multi-functional tool included
• Packaging optimally designed for enclosure
Note

Technical data

Material	Stainless steel 1.4301 1.5 mm
Surface	Electroplished
IP protection class	IP 66
NEMA Rating	3, 4x, 5
Gland plates	1.5 mm thick stainless steel 1.4301 (304) flange plates, mounted with M6 screws, spanner size 10 mm
Earthing inside	Welded-on M6 stainless-steel earth stud in enclosure lid and base
Earthing outside	External earth position – suitable for M6 threaded screw
Installation mounting	Welded mounting bracket for flexible mounting of the mounting plate, rails or TAS 20 rails. They contain 4.51 mm drill holes for accommodating the mounting plate or TS/TAS by means of self-tapping screws (1274150000)
Enclosure attachment	Direct mounting (11 mm mounting holes on rear wall) or via mounting feet (optionally available), adjustable by 90°
Lid opening	125°
Lid fixing	Quarter lock with double bit
Impact resistance	10J
Gasket material	Neoprene - CR
Operating temperature range	-40 °C ... +85 °C
Tightening torque of gland plates screws*	2.5 Nm
Note	*Please use our hexagon screwdriver with 10 mm size (9009070000)

Approvals for empty enclosures

DIN EN 62208	Empty enclosure standard
Germanischer Lloyd	20 593 - 11 HH
cULus	E243298
Note	

Klippon® TBi QL 302015

Depth 150 mm

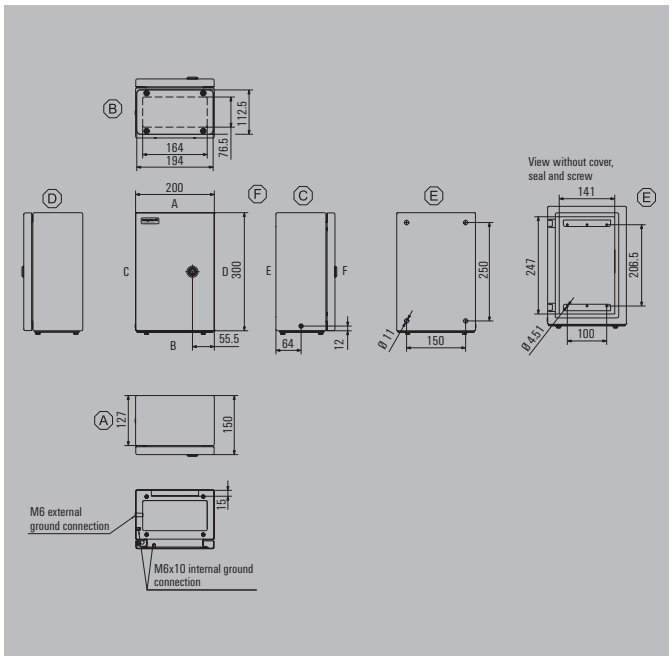

Height/Width/Depth	300 / 200 / 150 mm

Ordering data

Stainless steel 1.4301 304, electropolished	Order No.
0 gland plate	1197430000
1 gland plate - bottom side (B)	1197440000

Note

Accessories

Mounting plates and fastening screws	Order No.
Steel sheet, zinc plated	1309690000
Stainless steel 1.4301	1309700000
Fastening screws for terminal rails	1274150000
Stainless steel spacer M6 x 8, Set of 4	
10 mm length	0935110000
15 mm length	0935120000
20 mm length	0935130000
30 mm length	0935140000
Mild steel nickel plated Spacer M6 x 8, set of 2	
15 mm length	3896100000
20 mm length	3896200000
30 mm length	3896300000
Mounting feet, set containing 4 pieces each	
Stainless steel 1.4301	1289180000
Lock inserts	
Double-bit	1191590000
Slot	1191600000

Max. number of terminals (industry)

Max. number of terminals (industry)	vertical	horizontal
2.5 mm²	1x36	3x17
4 mm²	1x30	3x14
6 mm²	1x23	3x11
10 mm²	1x18	3x9
16 mm²	1x15	3x7
35 mm²	1x11	3x5

Note

The assembly with modular terminals gives consideration to a distance of 10 mm from the end of each mounting rail.
Order recommendations:
TS 35 mounting rail (screw terminal) WDU 2.5 1020000000 / (tension clamp terminal) ZDU 2.5 1608510000 / (tension clamp terminal) PDU 2.5 1896110000
TS 32 mounting rail (screw terminal) SAK 2.5 0279660000
TS 15 mounting rail (screw terminal) AKZ 2.5 0697160000

Number of cable entries

Number of cable entries	A / B	C / D
M12	14	
M16	7	
M20	6	
M25	3	
M32	2	
M40	2	
M50	1	
M63		
M75		

Note Our IP 68 brass cable glands are used as the reference for these guideline values.

Note

Klippon® TBi QL 303015

Depth 150 mm

Height/Width/Depth	300 / 300 / 150 mm

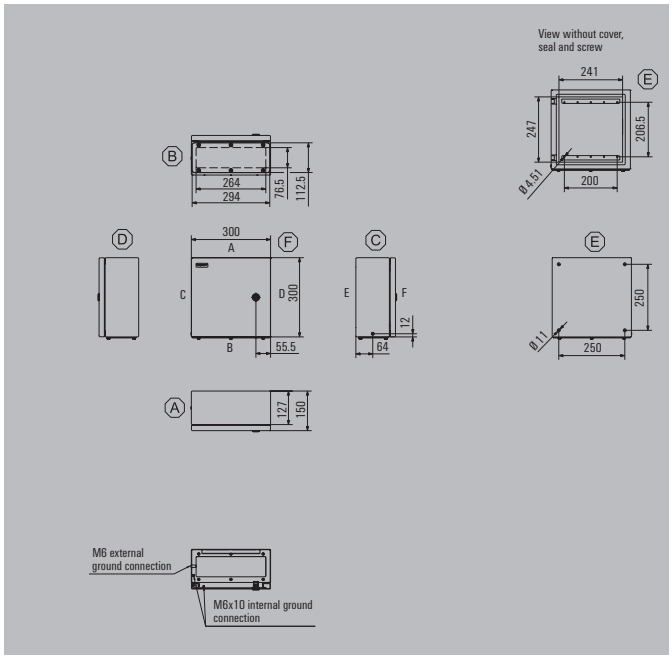

Ordering data

Stainless steel 1.4301 304, electropolished	Order No.
0 gland plate	1197450000
1 gland plate - bottom side (B)	1197460000

Note

Max. number of terminals (industry)

Max. number of terminals (industry)	vertical	horizontal
2.5 mm²	3x36	3x36
4 mm²	3x30	3x30
6 mm²	3x23	3x23
10 mm²	3x18	3x18
16 mm²	3x15	3x15
35 mm²	3x11	3x11

Note

The assembly with modular terminals gives consideration to a distance of 10 mm from the end of each mounting rail.
Order recommendations:
TS 35 mounting rail (screw terminal) WDU 2.5 1020000000 / (tension clamp terminal) ZDU 2.5 1608510000 / (tension clamp terminal) PDU 2.5 1896110000
TS 32 mounting rail (screw terminal) SAK 2.5 0279660000
TS 15 mounting rail (screw terminal) AKZ 2.5 0697160000

Accessories

Mounting plates and fastening screws	Order No.
Steel sheet, zinc plated	1310410000
Stainless steel 1.4301	1310320000
Fastening screws for terminal rails	1274150000
Stainless steel spacer M6 x 8, Set of 4	
10 mm length	0935110000
15 mm length	0935120000
20 mm length	0935130000
30 mm length	0935140000
Mild steel nickel plated Spacer M6 x 8, set of 2	
15 mm length	3896100000
20 mm length	3896200000
30 mm length	3896300000
Mounting feet, set containing 4 pieces each	
Stainless steel 1.4301	1289180000
Lock inserts	
Double-bit	1191590000
Slot	1191600000

Number of cable entries

Number of cable entries	A / B	C / D
M12	23	
M16	13	
M20	11	
M25	5	
M32	4	
M40	3	
M50	3	
M63		
M75		

Note Our IP 68 brass cable glands are used as the reference for these guideline values.

Note

Klippon® TBi QL 303022

Depth 220 mm

Height/Width/Depth	300 / 300 / 220 mm

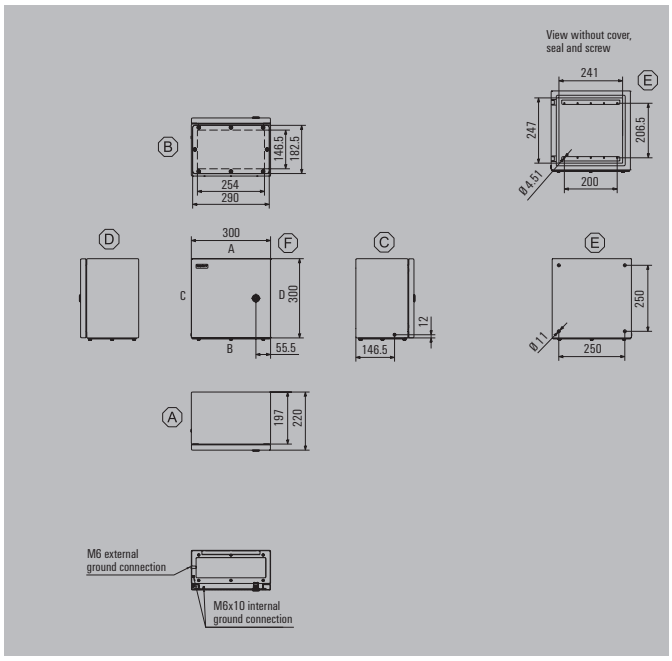

Ordering data

Stainless steel 1.4301 304, electropolished	Order No.
0 gland plate	1197470000
1 gland plate - bottom side (B)	1197480000

Note

Accessories

Mounting plates and fastening screws	Order No.
Steel sheet, zinc plated	1310410000
Stainless steel 1.4301	1310320000
Fastening screws for terminal rails	1274150000
Stainless steel spacer M6 x 8, Set of 4	
10 mm length	0935110000
15 mm length	0935120000
20 mm length	0935130000
30 mm length	0935140000
Mild steel nickel plated Spacer M6 x 8, set of 2	
15 mm length	3896100000
20 mm length	3896200000
30 mm length	3896300000
Mounting feet, set containing 4 pieces each	
Stainless steel 1.4301	1289180000
Lock inserts	
Double-bit	1191590000
Slot	1191600000

Max. number of terminals (industry)

Max. number of terminals (industry)	vertical	horizontal
2.5 mm²	3x36	3x36
4 mm²	3x30	3x30
6 mm²	3x23	3x23
10 mm²	3x18	3x18
16 mm²	3x15	3x15
35 mm²	3x11	3x11

Note

The assembly with modular terminals gives consideration to a distance of 10 mm from the end of each mounting rail.
Order recommendations:
TS 35 mounting rail (screw terminal) WDU 2.5 1020000000 / (tension clamp terminal) ZDU 2.5 1608510000 / (tension clamp terminal) PDU 2.5 1896110000
TS 32 mounting rail (screw terminal) SAK 2.5 0279660000
TS 15 mounting rail (screw terminal) AKZ 2.5 0697160000

Number of cable entries

Number of cable entries	A / B	C / D
M12	38	
M16	26	
M20	22	
M25	14	
M32	7	
M40	6	
M50	3	
M63	2	
M75	2	

Note Our IP 68 brass cable glands are used as the reference for these guideline values.

Note

Klippon® TBi QL 403015

Depth 150 mm

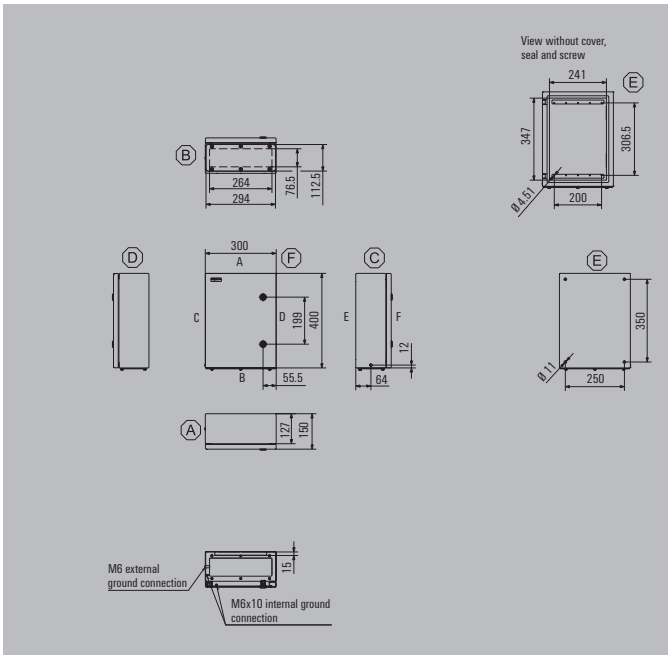

Height/Width/Depth	400 / 300 / 150 mm

Ordering data

Stainless steel 1.4301 304, electropolished	Order No.
0 gland plate	1197490000
1 gland plate - bottom side (B)	1197500000

Note

Accessories

Mounting plates and fastening screws	Order No.
Steel sheet, zinc plated	1310420000
Stainless steel 1.4301	1310330000
Fastening screws for terminal rails	1274150000
Stainless steel spacer M6 x 8, Set of 4	
10 mm length	0935110000
15 mm length	0935120000
20 mm length	0935130000
30 mm length	0935140000
Mild steel nickel plated Spacer M6 x 8, set of 2	
15 mm length	3896100000
20 mm length	3896200000
30 mm length	3896300000
Mounting feet, set containing 4 pieces each	
Stainless steel 1.4301	1289180000
Lock inserts	
Double-bit	1191590000
Slot	1191600000

Max. number of terminals (industry)

Max. number of terminals (industry)	vertical	horizontal
2.5 mm²	3x56	4x36
4 mm²	3x47	4x30
6 mm²	3x35	4x23
10 mm²	3x28	4x18
16 mm²	3x23	4x15
35 mm²	3x18	4x11

Note

The assembly with modular terminals gives consideration to a distance of 10 mm from the end of each mounting rail.
Order recommendations:
TS 35 mounting rail (screw terminal) WDU 2.5 1020000000 / (tension clamp terminal) ZDU 2.5 1608510000 / (tension clamp terminal) PDU 2.5 1896110000
TS 32 mounting rail (screw terminal) SAK 2.5 0279660000
TS 15 mounting rail (screw terminal) AKZ 2.5 0697160000

Number of cable entries

Number of cable entries	A / B	C / D
M12	23	
M16	13	
M20	11	
M25	5	
M32	4	
M40	3	
M50	3	
M63		
M75		

Note Our IP 68 brass cable glands are used as the reference for these guideline values.

Note

Klippon® TBi QL 403022

Depth 220 mm

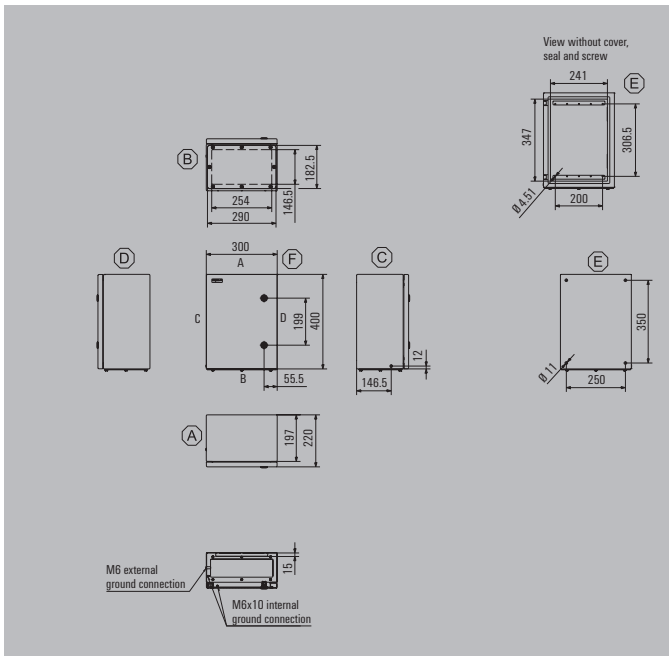

Height/Width/Depth	400 / 300 / 220 mm

Ordering data

Stainless steel 1.4301 304, electropolished	Order No.
0 gland plate	1197510000
1 gland plate - bottom side (B)	1197520000

Note

Accessories

Mounting plates and fastening screws	Order No.
Steel sheet, zinc plated	1310420000
Stainless steel 1.4301	1310330000
Fastening screws for terminal rails	1274150000
Stainless steel spacer M6 x 8, Set of 4	
10 mm length	0935110000
15 mm length	0935120000
20 mm length	0935130000
30 mm length	0935140000
Mild steel nickel plated Spacer M6 x 8, set of 2	
15 mm length	3896100000
20 mm length	3896200000
30 mm length	3896300000
Mounting feet, set containing 4 pieces each	
Stainless steel 1.4301	1289180000
Lock inserts	
Double-bit	1191590000
Slot	1191600000

Max. number of terminals (industry)

Max. number of terminals (industry)	vertical	horizontal
2.5 mm²	3x56	4x36
4 mm²	3x47	4x30
6 mm²	3x35	4x23
10 mm²	3x28	4x18
16 mm²	3x23	4x15
35 mm²	3x18	4x11

Note

The assembly with modular terminals gives consideration to a distance of 10 mm from the end of each mounting rail.
Order recommendations:
TS 35 mounting rail (screw terminal) WDU 2.5 1020000000 / (tension clamp terminal) ZDU 2.5 1608510000 / (tension clamp terminal) PDU 2.5 1896110000
TS 32 mounting rail (screw terminal) SAK 2.5 0279660000
TS 15 mounting rail (screw terminal) AKZ 2.5 0697160000

Number of cable entries

Number of cable entries	A / B	C / D
M12	38	
M16	26	
M20	22	
M25	14	
M32	7	
M40	6	
M50	3	
M63	2	
M75	2	

Note Our IP 68 brass cable glands are used as the reference for these guideline values.

Note

Klippon® TBi QL 404022

Depth 220 mm

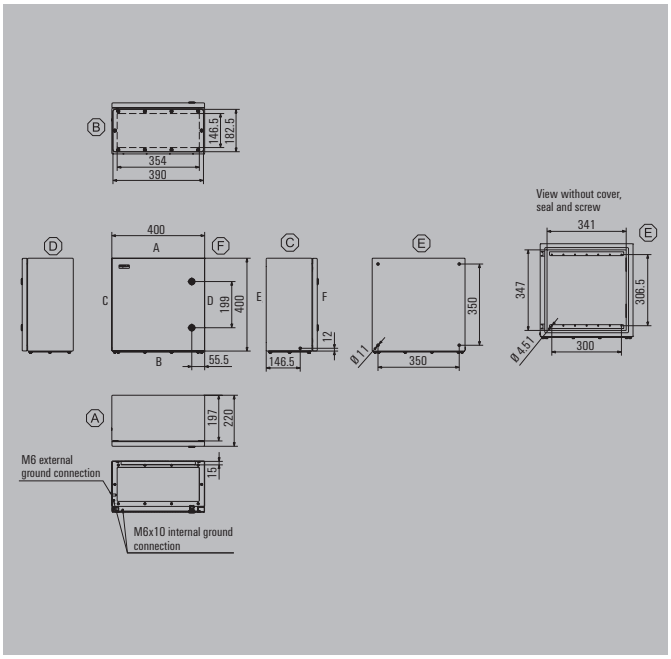

Height/Width/Depth	400 / 400 / 220 mm

Ordering data

Stainless steel 1.4301 304, electropolished	Order No.
0 gland plate	1197530000
1 gland plate - bottom side (B)	1197540000

Note

Max. number of terminals (industry)

Max. number of terminals (industry)	vertical	horizontal
2.5 mm²	4x56	4x56
4 mm²	4x47	4x47
6 mm²	4x35	4x35
10 mm²	4x28	4x28
16 mm²	4x23	4x23
35 mm²	4x18	4x18

Note

The assembly with modular terminals gives consideration to a distance of 10 mm from the end of each mounting rail.
Order recommendations:
TS 35 mounting rail (screw terminal) WDU 2.5 1020000000 / (tension clamp terminal) ZDU 2.5 1608510000 / (tension clamp terminal) PDU 2.5 1896110000
TS 32 mounting rail (screw terminal) SAK 2.5 0279660000
TS 15 mounting rail (screw terminal) AKZ 2.5 0697160000

Accessories

Mounting plates and fastening screws	Order No.
Steel sheet, zinc plated	1310430000
Stainless steel 1.4301	1310340000
Fastening screws for terminal rails	1274150000
Stainless steel spacer M6 x 8, Set of 4	
10 mm length	0935110000
15 mm length	0935120000
20 mm length	0935130000
30 mm length	0935140000
Mild steel nickel plated Spacer M6 x 8, set of 2	
15 mm length	3896100000
20 mm length	3896200000
30 mm length	3896300000
Mounting feet, set containing 4 pieces each	
Stainless steel 1.4301	1289180000
Lock inserts	
Double-bit	1191590000
Slot	1191600000

Number of cable entries

Number of cable entries	A / B	C / D
M12	53	
M16	36	
M20	30	
M25	20	
M32	11	
M40	9	
M50	4	
M63	3	
M75	3	

Note Our IP 68 brass cable glands are used as the reference for these guideline values.

Note

Klippon® TBi QL 504022

Depth 220 mm

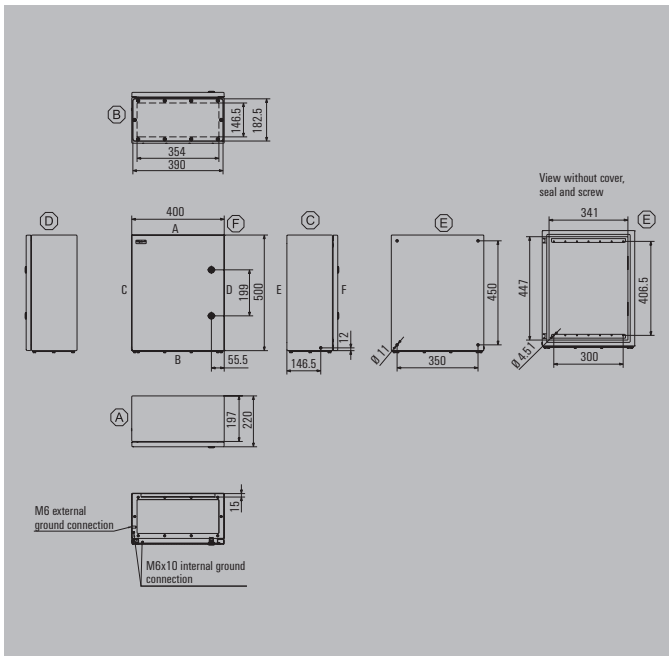

Height/Width/Depth	500 / 400 / 220 mm

Ordering data

Stainless steel 1.4301 304, electropolished	Order No.
0 gland plate	1197550000
1 gland plate - bottom side (B)	1197560000

Note

Accessories

Mounting plates and fastening screws	Order No.
Steel sheet, zinc plated	1310440000
Stainless steel 1.4301	1310350000
Fastening screws for terminal rails	1274150000
Stainless steel spacer M6 x 8, Set of 4	
10 mm length	0935110000
15 mm length	0935120000
20 mm length	0935130000
30 mm length	0935140000
Mild steel nickel plated Spacer M6 x 8, set of 2	
15 mm length	3896100000
20 mm length	3896200000
30 mm length	3896300000
Mounting feet, set containing 4 pieces each	
Stainless steel 1.4301	1289180000
Lock inserts	
Double-bit	1191590000
Slot	1191600000

Max. number of terminals (industry)

Max. number of terminals (industry)	vertical	horizontal
2.5 mm²	4x75	6x56
4 mm²	4x63	6x47
6 mm²	4x47	6x35
10 mm²	4x38	6x28
16 mm²	4x32	6x23
35 mm²	4x24	6x18

Note

The assembly with modular terminals gives consideration to a distance of 10 mm from the end of each mounting rail.
Order recommendations:
TS 35 mounting rail (screw terminal) WDU 2.5 1020000000 / (tension clamp terminal) ZDU 2.5 1608510000 / (tension clamp terminal) PDU 2.5 1896110000
TS 32 mounting rail (screw terminal) SAK 2.5 0279660000
TS 15 mounting rail (screw terminal) AKZ 2.5 0697160000

Number of cable entries

Number of cable entries	A / B	C / D
M12	53	
M16	36	
M20	30	
M25	20	
M32	11	
M40	9	
M50	4	
M63	3	
M75	3	

Note Our IP 68 brass cable glands are used as the reference for these guideline values.

Note

Klippon® TBi QL 505022

Depth 220 mm

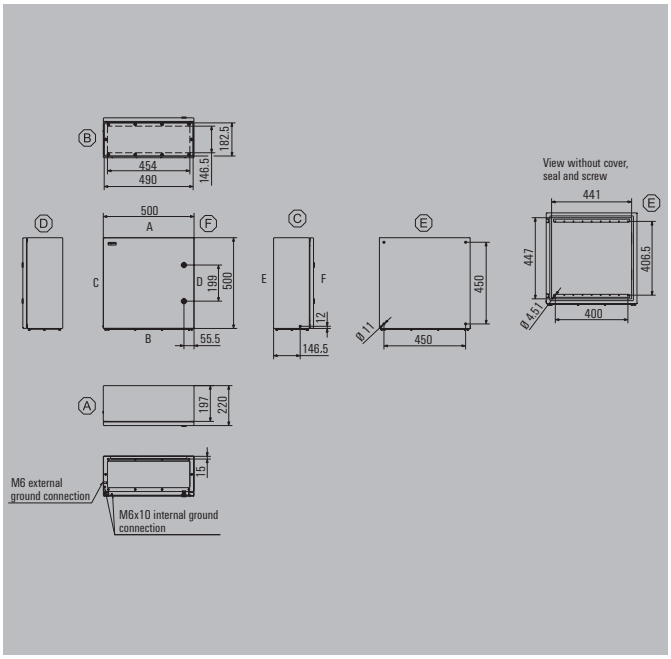

Height/Width/Depth	500 / 500 / 220 mm

Ordering data

Stainless steel 1.4301 304, electropolished	Order No.
0 gland plate	1197570000
1 gland plate - bottom side (B)	1197580000

Note

Accessories

Mounting plates and fastening screws	Order No.
Steel sheet, zinc plated	1310450000
Stainless steel 1.4301	1310360000
Fastening screws for terminal rails	1274150000
Stainless steel spacer M6 x 8, Set of 4	
10 mm length	0935110000
15 mm length	0935120000
20 mm length	0935130000
30 mm length	0935140000
Mild steel nickel plated Spacer M6 x 8, set of 2	
15 mm length	3896100000
20 mm length	3896200000
30 mm length	3896300000
Mounting feet, set containing 4 pieces each	
Stainless steel 1.4301	1289180000
Lock inserts	
Double-bit	1191590000
Slot	1191600000

Max. number of terminals (industry)

Max. number of terminals (industry)	vertical	horizontal
2.5 mm²	6x75	6x75
4 mm²	6x63	6x63
6 mm²	6x47	6x47
10 mm²	6x38	6x38
16 mm²	6x32	6x32
35 mm²	6x24	6x24

Note

The assembly with modular terminals gives consideration to a distance of 10 mm from the end of each mounting rail.
Order recommendations:
TS 35 mounting rail (screw terminal) WDU 2.5 1020000000 / (tension clamp terminal) ZDU 2.5 1608510000 / (tension clamp terminal) PDU 2.5 1896110000
TS 32 mounting rail (screw terminal) SAK 2.5 0279660000
TS 15 mounting rail (screw terminal) AKZ 2.5 0697160000

Number of cable entries

Number of cable entries	A / B	C / D
M12	70	
M16	46	
M20	40	
M25	26	
M32	14	
M40	12	
M50	5	
M63	4	
M75	3	

Note Our IP 68 brass cable glands are used as the reference for these guideline values.

Note

Klippon® TBi QL 604022

Depth 220 mm

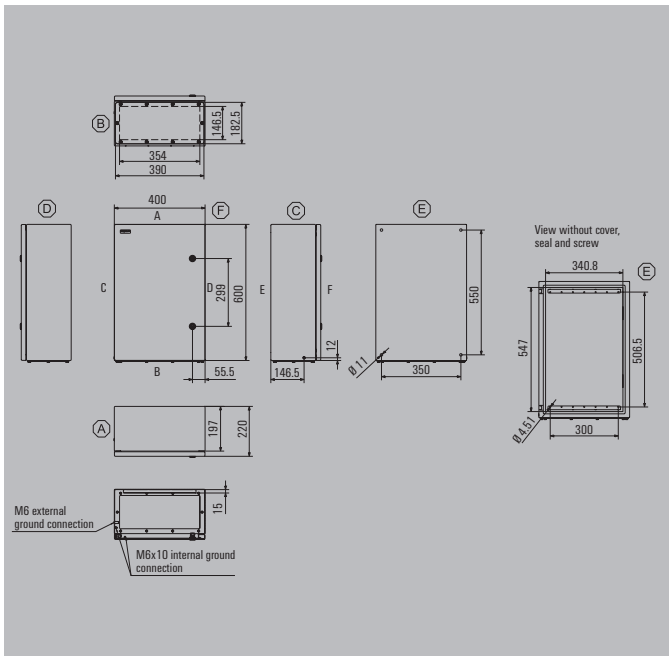

Height/Width/Depth	600 / 400 / 220 mm

Ordering data

Stainless steel 1.4301 304, electropolished	Order No.
0 gland plate	1197590000
1 gland plate - bottom side (B)	1197600000

Note

Accessories

Mounting plates and fastening screws	Order No.
Steel sheet, zinc plated	1310460000
Stainless steel 1.4301	1310370000
Fastening screws for terminal rails	1274150000
Stainless steel spacer M6 x 8, Set of 4	
10 mm length	0935110000
15 mm length	0935120000
20 mm length	0935130000
30 mm length	0935140000
Mild steel nickel plated Spacer M6 x 8, set of 2	
15 mm length	3896100000
20 mm length	3896200000
30 mm length	3896300000
Mounting feet, set containing 4 pieces each	
Stainless steel 1.4301	1289180000
Lock inserts	
Double-bit	1191590000
Slot	1191600000

Max. number of terminals (industry)

Max. number of terminals (industry)	vertical	horizontal
2.5 mm²	4x94	8x56
4 mm²	4x79	8x47
6 mm²	4x60	8x35
10 mm²	4x48	8x28
16 mm²	4x40	8x23
35 mm²	4x30	8x18

Note

The assembly with modular terminals gives consideration to a distance of 10 mm from the end of each mounting rail.
Order recommendations:
TS 35 mounting rail (screw terminal) WDU 2.5 1020000000 / (tension clamp terminal) ZDU 2.5 1608510000 / (tension clamp terminal) PDU 2.5 1896110000
TS 32 mounting rail (screw terminal) SAK 2.5 0279660000
TS 15 mounting rail (screw terminal) AKZ 2.5 0697160000

Number of cable entries

Number of cable entries	A / B	C / D
M12	53	
M16	36	
M20	30	
M25	20	
M32	11	
M40	9	
M50	4	
M63	3	
M75	3	

Note Our IP 68 brass cable glands are used as the reference for these guideline values.

Note

Klippon® TBi QL 606022

Depth 220 mm

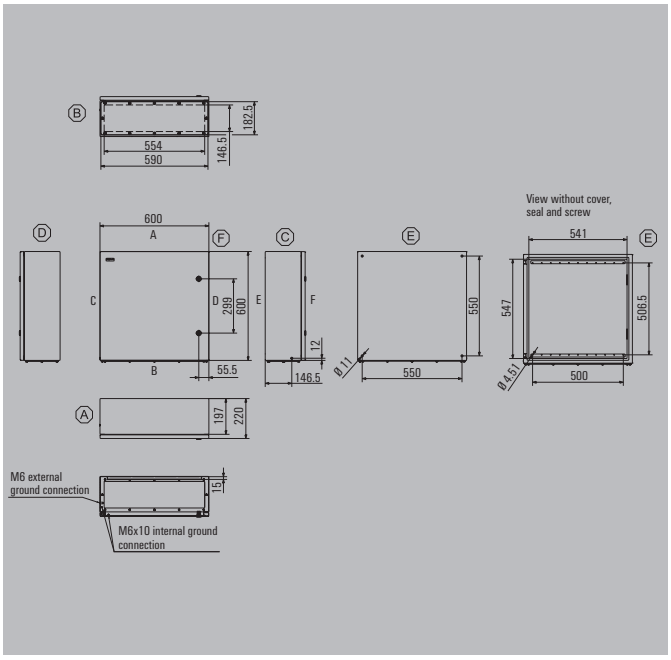

Height/Width/Depth	600 / 600 / 220 mm

Ordering data

Stainless steel 1.4301 304, electropolished	Order No.
0 gland plate	1197610000
1 gland plate - bottom side (B)	1197620000

Note

Accessories

Mounting plates and fastening screws	Order No.
Steel sheet, zinc plated	1310470000
Stainless steel 1.4301	1310380000
Fastening screws for terminal rails	1274150000
Stainless steel spacer M6 x 8, Set of 4	
10 mm length	0935110000
15 mm length	0935120000
20 mm length	0935130000
30 mm length	0935140000
Mild steel nickel plated Spacer M6 x 8, set of 2	
15 mm length	3896100000
20 mm length	3896200000
30 mm length	3896300000
Mounting feet, set containing 4 pieces each	
Stainless steel 1.4301	1289180000
Lock inserts	
Double-bit	1191590000
Slot	1191600000

Max. number of terminals (industry)

Max. number of terminals (industry)	vertical	horizontal
2.5 mm²	8x94	8x94
4 mm²	8x79	8x79
6 mm²	8x60	8x60
10 mm²	8x48	8x48
16 mm²	8x40	8x40
35 mm²	8x30	8x30

Note

The assembly with modular terminals gives consideration to a distance of 10 mm from the end of each mounting rail.
Order recommendations:
TS 35 mounting rail (screw terminal) WDU 2.5 1020000000 / (tension clamp terminal) ZDU 2.5 1608510000 / (tension clamp terminal) PDU 2.5 1896110000
TS 32 mounting rail (screw terminal) SAK 2.5 0279660000
TS 15 mounting rail (screw terminal) AKZ 2.5 0697160000

Number of cable entries

Number of cable entries	A / B	C / D
M12	85	
M16	58	
M20	50	
M25	32	
M32	17	
M40	14	
M50	6	
M63	5	
M75	4	

Note Our IP 68 brass cable glands are used as the reference for these guideline values.

Note

Klippon® TBi QL 806022

Depth 220 mm

Height/Width/Depth	800 / 600 / 220 mm

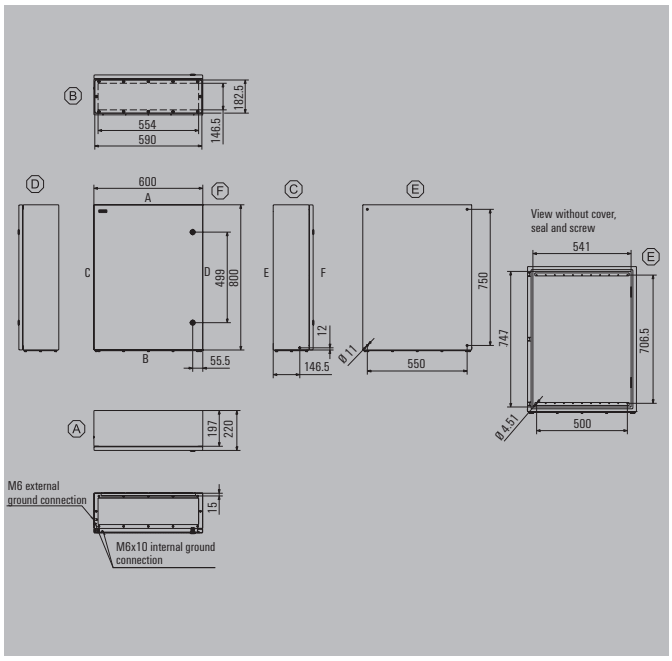

Ordering data

Stainless steel 1.4301 304, electropolished	Order No.
0 gland plate	1197630000
1 gland plate - bottom side (B)	1197640000

Note

Max. number of terminals (industry)

Max. number of terminals (industry)	vertical	horizontal
2.5 mm²	8x133	11x94
4 mm²	8x111	11x79
6 mm²	8x84	11x60
10 mm²	8x67	11x48
16 mm²	8x56	11x40
35 mm²	8x42	11x30

Note

The assembly with modular terminals gives consideration to a distance of 10 mm from the end of each mounting rail.
Order recommendations:
TS 35 mounting rail (screw terminal) WDU 2.5 1020000000 / (tension clamp terminal) ZDU 2.5 1608510000 / (tension clamp terminal) PDU 2.5 1896110000
TS 32 mounting rail (screw terminal) SAK 2.5 0279660000
TS 15 mounting rail (screw terminal) AKZ 2.5 0697160000

Accessories

Mounting plates and fastening screws	Order No.
Steel sheet, zinc plated	1310480000
Stainless steel 1.4301	1310390000
Fastening screws for terminal rails	1274150000
Stainless steel spacer M6 x 8, Set of 4	
10 mm length	0935110000
15 mm length	0935120000
20 mm length	0935130000
30 mm length	0935140000
Mild steel nickel plated Spacer M6 x 8, set of 2	
15 mm length	3896100000
20 mm length	3896200000
30 mm length	3896300000
Mounting feet, set containing 4 pieces each	
Stainless steel 1.4301	1289180000
Lock inserts	
Double-bit	1191590000
Slot	1191600000

Number of cable entries

Number of cable entries	A / B	C / D
M12	85	
M16	58	
M20	50	
M25	32	
M32	17	
M40	14	
M50	6	
M63	5	
M75	4	

Note Our IP 68 brass cable glands are used as the reference for these guideline values.

Note

Klippon® TBi FS – Fixing Screw

Stainless steel enclosures
for use within harsh industrial environments

Even under moderate environmental conditions, there is an increasing need for complex, individual automated solutions. A harsh industrial environment places additional, heavy demands on applications and determines the design of the industrial enclosures to meet these demands. With complete protection and excellent durability, our Klippon® TBi stainless steel enclosures offer the best protection for the components inside them. Its electro-polished surface makes the enclosure extraordinarily resistant to corrosion.

- Available in 11 sizes and 2 depths
- Operating temperature range -40 °C to +85 °C
- Impact resistance of 10 J Industrial application
- Dedicated internal mounting support bracket for fixing terminal rail or mounting plates with self forming screws
- External earth point – suitable for M6 threaded screw
- Concealed hinges
- Internal earth stud – M6 screw fitted to enclosure lid and base
- Supplied in 0 or 1 gland plate version
- Direct mounting of the enclosure by means of rear mounting holes
- Mounting feet in stainless steel are optionally available, can be rotated by 90°
- Moisture and dust channel
- Double-bit locking system

Our assembly service can supply these enclosure preassembled with terminals and cable glands according to customer requirements.

NEW

c UL us LISTED

Overview of enclosures

Ordering data

Description	Height x width x depth in mm	0 Gland Plate	1 Gland Plate (below)
KTBi FS 302015 S2E_*	300 x 200 x 150	1197200000	1197210000
KTBi FS 303015 S2E_*	300 x 300 x 150	1197220000	1197230000
KTBi FS 303022 S2E_*	300 x 300 x 220	1197240000	1197250000
KTBi FS 403015 S2E_*	400 x 300 x 150	1197260000	1197270000
KTBi FS 403022 S2E_*	400 x 300 x 220	1197280000	1197290000
KTBi FS 404022 S2E_*	400 x 400 x 220	1197300000	1197310000
KTBi FS 504022 S2E_*	500 x 400 x 220	1197320000	1197330000
KTBi FS 505022 S2E_*	500 x 500 x 220	1197340000	1197350000
KTBi FS 604022 S2E_*	600 x 400 x 220	1197360000	1197370000
KTBi FS 606022 S2E_*	600 x 600 x 220	1197380000	1197390000
KTBi FS 806022 S2E_*	800 x 600 x 220	1197400000	1197410000
Note	*Placeholder for the number of gland plates (0 or 1)		

Technical Overview

Features

- Available in 11 sizes and 2 standard depths
- Welded mounting bracket for securing the mounting plate or mounting rail by means of self-tapping screws
- External earth - M6 earth tab rivet
- M6 earthing bolt welded in the cover and base of the enclosure
- Available with 0 or 1 flange plates
- Optimised laser welding, high quality standard
- Direct mounting of the enclosures with rear mounting holes
- Mounting feet in stainless steel are optionally available, and can be rotated by 90°
- Permanent labelling of items
- Packaging optimally designed for enclosure

Note

Technical data

Material	Stainless steel 1.4301 (304) 1.5 mm
Surface	Electroplished
IP protection class	IP 66
NEMA Rating	3, 4x, 5
Gland plates	1.5 mm thick stainless steel 1.4301 (304) flange plates, mounted with M6 screws, spanner size 10 mm
Earthing inside	Welded-on M6 stainless-steel earth stud in enclosure lid and base
Earthing outside	M6 earth tab rivet
Installation mounting	Welded mounting bracket for flexible mounting of the mounting plate, rails or TAS 20 rails. They contain 4.51 mm drill holes for accommodating the mounting plate or TS/TAS by means of self-tapping screws (1274150000)
Enclosure attachment	Direct mounting (11 mm mounting holes on rear wall) or via mounting feet (optionally available), adjustable by 90°
Lid opening	Fully removable lid
Lid fixing	M6 hexagon head slotted screws SW10 without hinge
Impact resistance	10J
Gasket material	Neoprene - CR
Operating temperature range	-40 °C ... +85 °C
Tightening torque screws of lid and gland plates*	2.5 Nm
Note	*Please use our hexagon screwdriver with 10 mm size (9009070000)

Approvals for empty enclosures

DIN EN 62208	Empty enclosure standard
Germanischer Lloyd	20 593 - 11 HH
cULus	E256877
Note	

Klippon® TBi FS 302015

Depth 150 mm

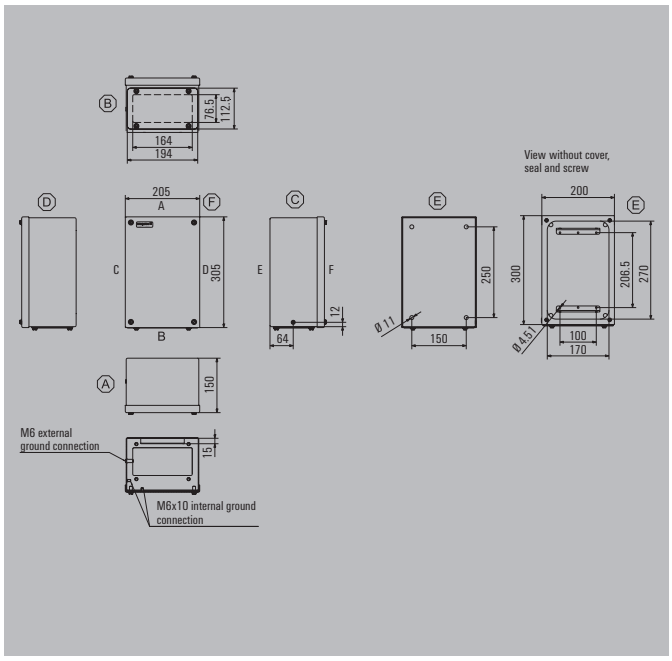

Height/Width/Depth	300 / 200 / 150 mm

Ordering data

Stainless steel 1.4301 304, electropolished	Order No.
0 gland plate	1197200000
1 gland plate - bottom side (B)	1197210000

Note

Accessories

Mounting plates and fastening screws	Order No.
Steel sheet, zinc plated	1309690000
Stainless steel 1.4301	1309700000
Fastening screws for terminal rails	1274150000
Stainless steel spacer M6 x 8, Set of 4	
10 mm length	0935110000
15 mm length	0935120000
20 mm length	0935130000
30 mm length	0935140000
Mild steel nickel plated Spacer M6 x 8, set of 2	
15 mm length	3896100000
20 mm length	3896200000
30 mm length	3896300000
Mounting feet, set containing 4 pieces each	
Stainless steel 1.4301	1289180000

Max. number of terminals (industry)

Max. number of terminals (industry)	vertical	horizontal
2.5 mm²	1x36	3x17
4 mm²	1x30	3x14
6 mm²	1x23	3x11
10 mm²	1x18	3x9
16 mm²	1x15	3x7
35 mm²	1x11	3x5

Note

The assembly with modular terminals gives consideration to a distance of 10 mm from the end of each mounting rail.
Order recommendations:
TS 35 mounting rail (screw terminal) WDU 2.5 1020000000 / (tension clamp terminal) ZDU 2.5 1608510000 / (tension clamp terminal) PDU 2.5 1896110000
TS 32 mounting rail (screw terminal) SAK 2.5 0279660000
TS 15 mounting rail (screw terminal) AKZ 2.5 0697160000

Number of cable entries

Number of cable entries	A / B	C / D
M12	14	
M16	7	
M20	6	
M25	3	
M32	2	
M40	2	
M50	1	
M63		
M75		

Note Our IP 68 brass cable glands are used as the reference for these guideline values.

Note

Klippon® TBi FS 303015

Depth **150 mm**

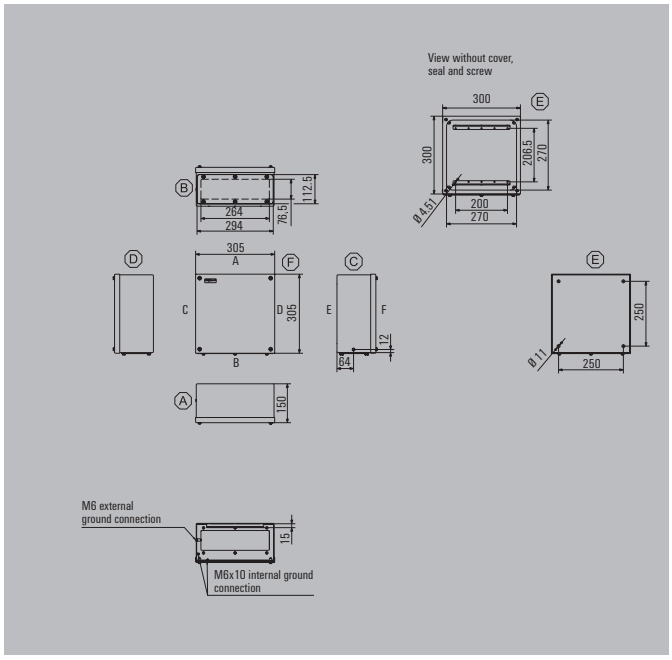

Height/Width/Depth	300 / 300 / 150 mm

Ordering data

Stainless steel 1.4301 304, electropolished	Order No.
0 gland plate	1197220000
1 gland plate - bottom side (B)	1197230000

Note

Accessories

Mounting plates and fastening screws	Order No.
Steel sheet, zinc plated	1310410000
Stainless steel 1.4301	1310320000
Fastening screws for terminal rails	1274150000
Stainless steel spacer M6 x 8, Set of 4	
10 mm length	0935110000
15 mm length	0935120000
20 mm length	0935130000
30 mm length	0935140000
Mild steel nickel plated Spacer M6 x 8, set of 2	
15 mm length	3896100000
20 mm length	3896200000
30 mm length	3896300000
Mounting feet, set containing 4 pieces each	
Stainless steel 1.4301	1289180000

Max. number of terminals (industry)

Max. number of terminals (industry)	vertical	horizontal
2.5 mm²	3x36	3x36
4 mm²	3x30	3x30
6 mm²	3x23	3x23
10 mm²	3x18	3x18
16 mm²	3x15	3x15
35 mm²	3x11	3x11

Note

The assembly with modular terminals gives consideration to a distance of 10 mm from the end of each mounting rail.
Order recommendations:
TS 35 mounting rail (screw terminal) WDU 2.5 1020000000 / (tension clamp terminal) ZDU 2.5 1608510000 / (tension clamp terminal) PDU 2.5 1896110000
TS 32 mounting rail (screw terminal) SAK 2.5 0279660000
TS 15 mounting rail (screw terminal) AKZ 2.5 0697160000

Number of cable entries

Number of cable entries	A / B	C / D
M12	23	
M16	13	
M20	11	
M25	5	
M32	4	
M40	3	
M50	3	
M63		
M75		

Note Our IP 68 brass cable glands are used as the reference for these guideline values.

Note

Klippon® TBi FS 303022

Depth 220 mm

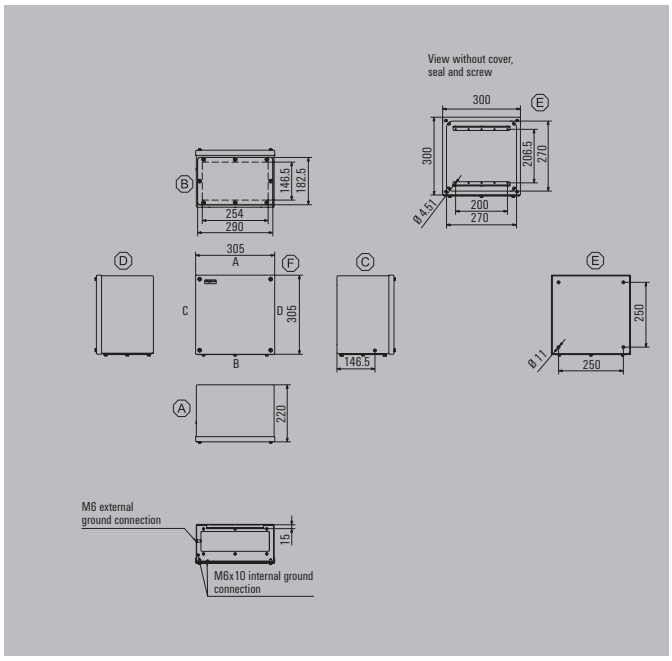

Height/Width/Depth	300 / 300 / 220 mm

Ordering data

Stainless steel 1.4301 304, electropolished	Order No.
0 gland plate	1197240000
1 gland plate - bottom side (B)	1197250000

Note

Accessories

Mounting plates and fastening screws	Order No.
Steel sheet, zinc plated	1310410000
Stainless steel 1.4301	1310320000
Fastening screws for terminal rails	1274150000
Stainless steel spacer M6 x 8, Set of 4	
10 mm length	0935110000
15 mm length	0935120000
20 mm length	0935130000
30 mm length	0935140000
Mild steel nickel plated Spacer M6 x 8, set of 2	
15 mm length	3896100000
20 mm length	3896200000
30 mm length	3896300000
Mounting feet, set containing 4 pieces each	
Stainless steel 1.4301	1289180000

Max. number of terminals (industry)

Max. number of terminals (industry)	vertical	horizontal
2.5 mm²	3x36	3x36
4 mm²	3x30	3x30
6 mm²	3x23	3x23
10 mm²	3x18	3x18
16 mm²	3x15	3x15
35 mm²	3x11	3x11

Note

The assembly with modular terminals gives consideration to a distance of 10 mm from the end of each mounting rail.
Order recommendations:
TS 35 mounting rail (screw terminal) WDU 2.5 1020000000 / (tension clamp terminal) ZDU 2.5 1608510000 / (tension clamp terminal) PDU 2.5 1896110000
TS 32 mounting rail (screw terminal) SAK 2.5 0279660000
TS 15 mounting rail (screw terminal) AKZ 2.5 0697160000

Number of cable entries

Number of cable entries	A / B	C / D
M12	38	
M16	26	
M20	22	
M25	14	
M32	7	
M40	6	
M50	3	
M63	2	
M75	2	

Note Our IP 68 brass cable glands are used as the reference for these guideline values.

Note

Klippon® TBi FS 403015

Depth 150 mm

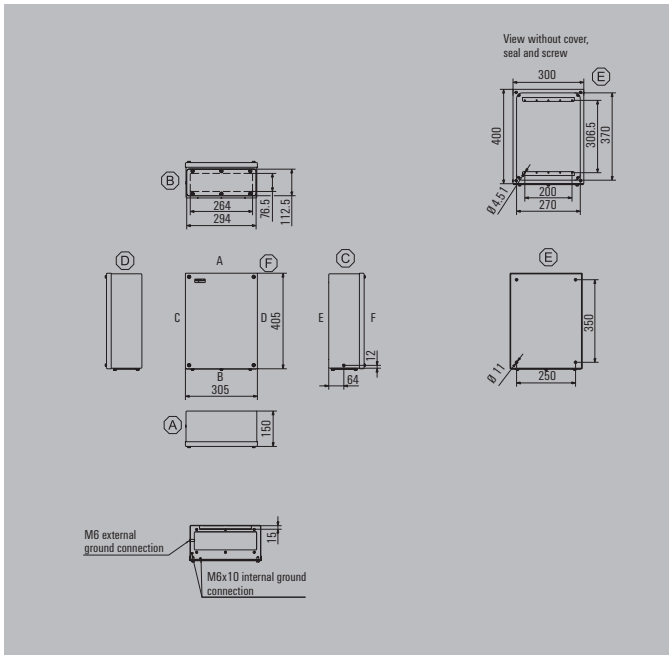

Height/Width/Depth	400 / 300 / 150 mm

Ordering data

Stainless steel 1.4301 304, electropolished	Order No.
0 gland plate	1197260000
1 gland plate - bottom side (B)	1197270000

Note

Accessories

Mounting plates and fastening screws	Order No.
Steel sheet, zinc plated	1310420000
Stainless steel 1.4301	1310330000
Fastening screws for terminal rails	1274150000
Stainless steel spacer M6 x 8, Set of 4	
10 mm length	0935110000
15 mm length	0935120000
20 mm length	0935130000
30 mm length	0935140000
Mild steel nickel plated Spacer M6 x 8, set of 2	
15 mm length	3896100000
20 mm length	3896200000
30 mm length	3896300000
Mounting feet, set containing 4 pieces each	
Stainless steel 1.4301	1289180000

Max. number of terminals (industry)

Max. number of terminals (industry)	vertical	horizontal
2.5 mm²	3x56	4x36
4 mm²	3x47	4x30
6 mm²	3x35	4x23
10 mm²	3x28	4x18
16 mm²	3x23	4x15
35 mm²	3x18	4x11

Note

The assembly with modular terminals gives consideration to a distance of 10 mm from the end of each mounting rail.
Order recommendations:
TS 35 mounting rail (screw terminal) WDU 2.5 1020000000 / (tension clamp terminal) ZDU 2.5 1608510000 / (tension clamp terminal) PDU 2.5 1896110000
TS 32 mounting rail (screw terminal) SAK 2.5 0279660000
TS 15 mounting rail (screw terminal) AKZ 2.5 0697160000

Number of cable entries

Number of cable entries	A / B	C / D
M12	23	
M16	13	
M20	11	
M25	5	
M32	4	
M40	3	
M50	3	
M63		
M75		

Note Our IP 68 brass cable glands are used as the reference for these guideline values.

Note

Klippon® TBi FS 403022

Depth 220 mm

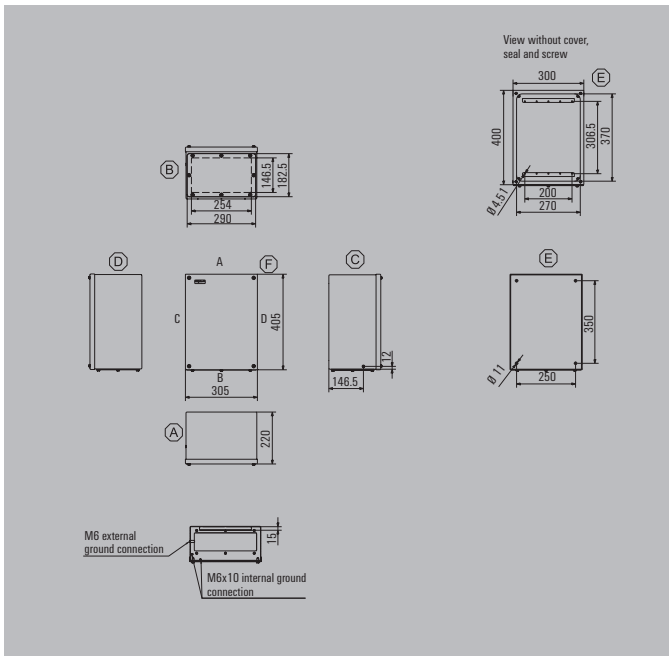

Height/Width/Depth	400 / 300 / 220 mm

Ordering data

Stainless steel 1.4301 304, electropolished	Order No.
0 gland plate	1197280000
1 gland plate - bottom side (B)	1197290000

Note

Accessories

Mounting plates and fastening screws	Order No.
Steel sheet, zinc plated	1310420000
Stainless steel 1.4301	1310330000
Fastening screws for terminal rails	1274150000
Stainless steel spacer M6 x 8, Set of 4	
10 mm length	0935110000
15 mm length	0935120000
20 mm length	0935130000
30 mm length	0935140000
Mild steel nickel plated Spacer M6 x 8, set of 2	
15 mm length	3896100000
20 mm length	3896200000
30 mm length	3896300000
Mounting feet, set containing 4 pieces each	
Stainless steel 1.4301	1289180000

Max. number of terminals (industry)

Max. number of terminals (industry)	vertical	horizontal
2.5 mm²	3x56	4x36
4 mm²	3x47	4x30
6 mm²	3x35	4x23
10 mm²	3x28	4x18
16 mm²	3x23	4x15
35 mm²	3x18	4x11

Note

The assembly with modular terminals gives consideration to a distance of 10 mm from the end of each mounting rail.
Order recommendations:
TS 35 mounting rail (screw terminal) WDU 2.5 1020000000 / (tension clamp terminal) ZDU 2.5 1608510000 / (tension clamp terminal) PDU 2.5 1896110000
TS 32 mounting rail (screw terminal) SAK 2.5 0279660000
TS 15 mounting rail (screw terminal) AKZ 2.5 0697160000

Number of cable entries

Number of cable entries	A / B	C / D
M12	38	
M16	26	
M20	22	
M25	14	
M32	7	
M40	6	
M50	3	
M63	2	
M75	2	

Note Our IP 68 brass cable glands are used as the reference for these guideline values.

Note

Klippon® TBi FS 404022

Depth **220 mm**

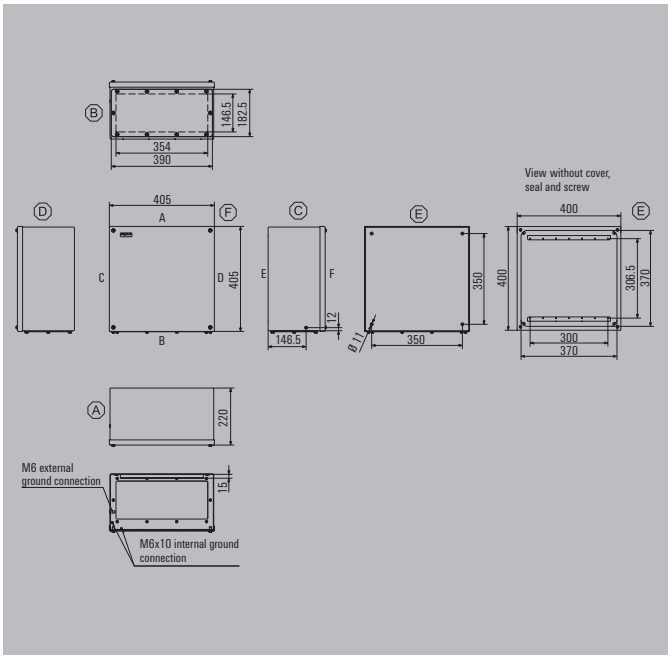

Height/Width/Depth	400 / 400 / 220 mm

Ordering data

Stainless steel 1.4301 304, electropolished	Order No.
0 gland plate	1197300000
1 gland plate - bottom side (B)	1197310000

Note

Accessories

Mounting plates and fastening screws	Order No.
Steel sheet, zinc plated	1310430000
Stainless steel 1.4301	1310340000
Fastening screws for terminal rails	1274150000
Stainless steel spacer M6 x 8, Set of 4	
10 mm length	0935110000
15 mm length	0935120000
20 mm length	0935130000
30 mm length	0935140000
Mild steel nickel plated Spacer M6 x 8, set of 2	
15 mm length	3896100000
20 mm length	3896200000
30 mm length	3896300000
Mounting feet, set containing 4 pieces each	
Stainless steel 1.4301	1289180000

Max. number of terminals (industry)

Max. number of terminals (industry)	vertical	horizontal
2.5 mm²	4x56	4x56
4 mm²	4x47	4x47
6 mm²	4x35	4x35
10 mm²	4x28	4x28
16 mm²	4x23	4x23
35 mm²	4x18	4x18

Note

The assembly with modular terminals gives consideration to a distance of 10 mm from the end of each mounting rail.
Order recommendations:
TS 35 mounting rail (screw terminal) WDU 2.5 1020000000 / (tension clamp terminal) ZDU 2.5 1608510000 / (tension clamp terminal) PDU 2.5 1896110000
TS 32 mounting rail (screw terminal) SAK 2.5 0279660000
TS 15 mounting rail (screw terminal) AKZ 2.5 0697160000

Number of cable entries

Number of cable entries	A / B	C / D
M12	53	
M16	36	
M20	30	
M25	20	
M32	11	
M40	9	
M50	4	
M63	3	
M75	3	

Note Our IP 68 brass cable glands are used as the reference for these guideline values.

Note

Klippon® TBi FS 504022

Depth 220 mm

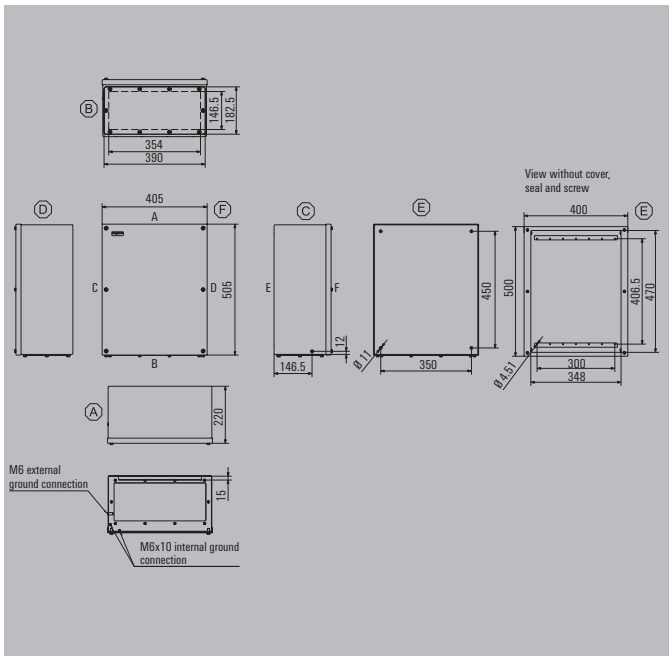

Height/Width/Depth	500 / 400 / 220 mm

Ordering data

Stainless steel 1.4301 304, electropolished	Order No.
0 gland plate	1197320000
1 gland plate - bottom side (B)	1197330000

Note

Accessories

Mounting plates and fastening screws	Order No.
Steel sheet, zinc plated	1310440000
Stainless steel 1.4301	1310350000
Fastening screws for terminal rails	1274150000
Stainless steel spacer M6 x 8, Set of 4	
10 mm length	0935110000
15 mm length	0935120000
20 mm length	0935130000
30 mm length	0935140000
Mild steel nickel plated Spacer M6 x 8, set of 2	
15 mm length	3896100000
20 mm length	3896200000
30 mm length	3896300000
Mounting feet, set containing 4 pieces each	
Stainless steel 1.4301	1289180000

Max. number of terminals (industry)

Max. number of terminals (industry)	vertical	horizontal
2.5 mm²	4x75	6x56
4 mm²	4x63	6x47
6 mm²	4x47	6x35
10 mm²	4x38	6x28
16 mm²	4x32	6x23
35 mm²	4x24	6x18

Note

The assembly with modular terminals gives consideration to a distance of 10 mm from the end of each mounting rail.
Order recommendations:
TS 35 mounting rail (screw terminal) WDU 2.5 1020000000 / (tension clamp terminal) ZDU 2.5 1608510000 / (tension clamp terminal) PDU 2.5 1896110000
TS 32 mounting rail (screw terminal) SAK 2.5 0279660000
TS 15 mounting rail (screw terminal) AKZ 2.5 0697160000

Number of cable entries

Number of cable entries	A / B	C / D
M12	53	
M16	36	
M20	30	
M25	20	
M32	11	
M40	9	
M50	4	
M63	3	
M75	3	

Note Our IP 68 brass cable glands are used as the reference for these guideline values.

Note

Klippon® TBi FS 505022

Depth 220 mm

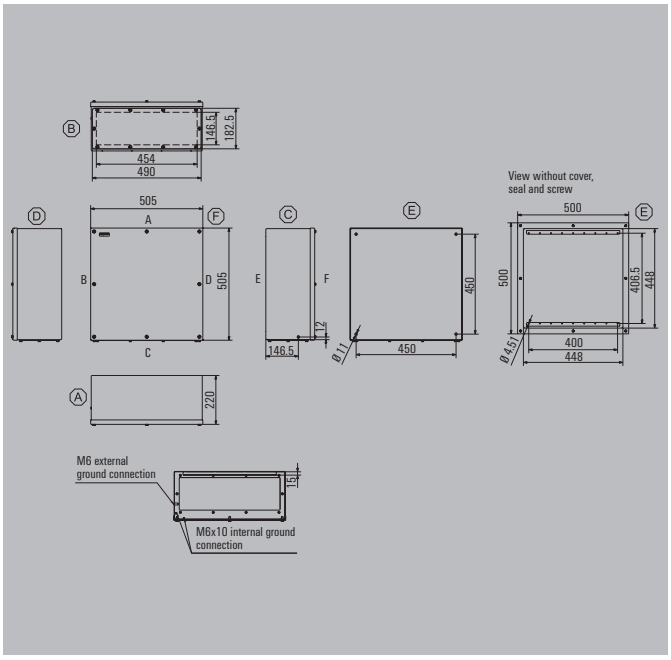

Height/Width/Depth	500 / 500 / 220 mm

Ordering data

Stainless steel 1.4301 304, electropolished	Order No.
0 gland plate	1197340000
1 gland plate - bottom side (B)	1197350000

Note

Accessories

Mounting plates and fastening screws	Order No.
Steel sheet, zinc plated	1310450000
Stainless steel 1.4301	1310360000
Fastening screws for terminal rails	1274150000
Stainless steel spacer M6 x 8, Set of 4	
10 mm length	0935110000
15 mm length	0935120000
20 mm length	0935130000
30 mm length	0935140000
Mild steel nickel plated Spacer M6 x 8, set of 2	
15 mm length	3896100000
20 mm length	3896200000
30 mm length	3896300000
Mounting feet, set containing 4 pieces each	
Stainless steel 1.4301	1289180000

Max. number of terminals (industry)

Max. number of terminals (industry)	vertical	horizontal
2.5 mm²	6x75	6x75
4 mm²	6x63	6x63
6 mm²	6x47	6x47
10 mm²	6x38	6x38
16 mm²	6x32	6x32
35 mm²	6x24	6x24

Note

The assembly with modular terminals gives consideration to a distance of 10 mm from the end of each mounting rail.
Order recommendations:
TS 35 mounting rail (screw terminal) WDU 2.5 1020000000 / (tension clamp terminal) ZDU 2.5 1608510000 / (tension clamp terminal) PDU 2.5 1896110000
TS 32 mounting rail (screw terminal) SAK 2.5 0279660000
TS 15 mounting rail (screw terminal) AKZ 2.5 0697160000

Number of cable entries

Number of cable entries	A / B	C / D
M12	70	
M16	46	
M20	40	
M25	26	
M32	14	
M40	12	
M50	5	
M63	4	
M75	3	

Note Our IP 68 brass cable glands are used as the reference for these guideline values.

Note

Klippon® TBi FS 604022

Depth 220 mm

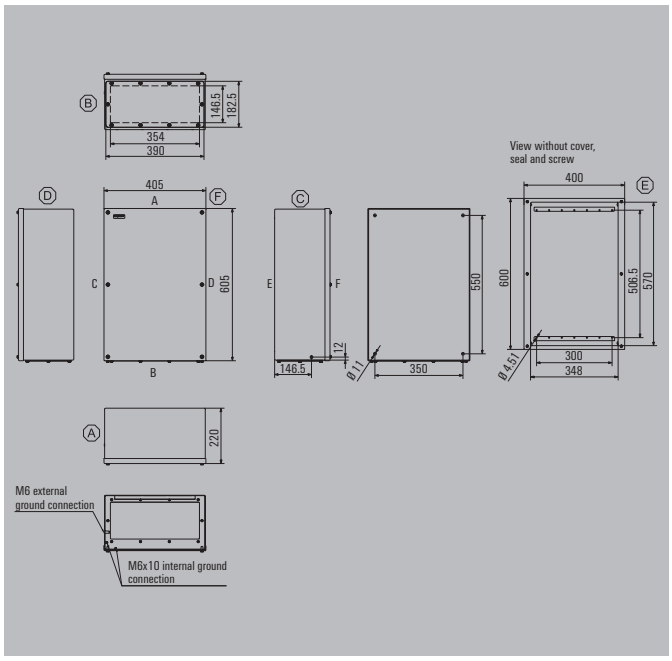

Height/Width/Depth	600 / 400 / 220 mm

Ordering data

Stainless steel 1.4301 304, electropolished	Order No.
0 gland plate	1197360000
1 gland plate - bottom side (B)	1197370000

Note

Accessories

Mounting plates and fastening screws	Order No.
Steel sheet, zinc plated	1310460000
Stainless steel 1.4301	1310370000
Fastening screws for terminal rails	1274150000
Stainless steel spacer M6 x 8, Set of 4	
10 mm length	0935110000
15 mm length	0935120000
20 mm length	0935130000
30 mm length	0935140000
Mild steel nickel plated Spacer M6 x 8, set of 2	
15 mm length	3896100000
20 mm length	3896200000
30 mm length	3896300000
Mounting feet, set containing 4 pieces each	
Stainless steel 1.4301	1289180000

Max. number of terminals (industry)

Max. number of terminals (industry)	vertical	horizontal
2.5 mm²	4x94	8x56
4 mm²	4x79	8x47
6 mm²	4x60	8x35
10 mm²	4x48	8x28
16 mm²	4x40	8x23
35 mm²	4x30	8x18

Note

The assembly with modular terminals gives consideration to a distance of 10 mm from the end of each mounting rail.
Order recommendations:
TS 35 mounting rail (screw terminal) WDU 2.5 1020000000 / (tension clamp terminal) ZDU 2.5 1608510000 / (tension clamp terminal) PDU 2.5 1896110000
TS 32 mounting rail (screw terminal) SAK 2.5 0279660000
TS 15 mounting rail (screw terminal) AKZ 2.5 0697160000

Number of cable entries

Number of cable entries	A / B	C / D
M12	53	
M16	36	
M20	30	
M25	20	
M32	11	
M40	9	
M50	4	
M63	3	
M75	3	

Note Our IP 68 brass cable glands are used as the reference for these guideline values.

Note

Klippon® TBi FS 606022

Depth 220 mm

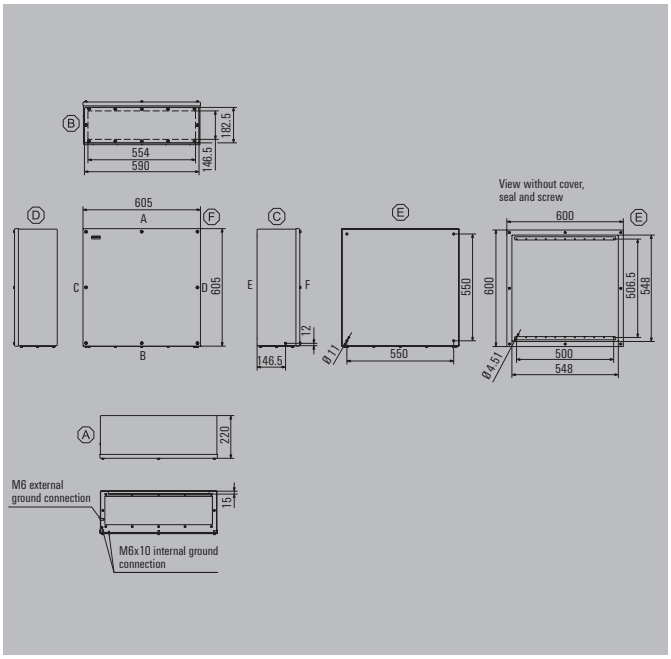

Height/Width/Depth	600 / 600 / 220 mm

Ordering data

Stainless steel 1.4301 304, electropolished	Order No.
0 gland plate	1197380000
1 gland plate - bottom side (B)	1197390000

Note

Accessories

Mounting plates and fastening screws	Order No.
Steel sheet, zinc plated	1310470000
Stainless steel 1.4301	1310380000
Fastening screws for terminal rails	1274150000
Stainless steel spacer M6 x 8, Set of 4	
10 mm length	0935110000
15 mm length	0935120000
20 mm length	0935130000
30 mm length	0935140000
Mild steel nickel plated Spacer M6 x 8, set of 2	
15 mm length	3896100000
20 mm length	3896200000
30 mm length	3896300000
Mounting feet, set containing 4 pieces each	
Stainless steel 1.4301	1289180000

Max. number of terminals (industry)

Max. number of terminals (industry)	vertical	horizontal
2.5 mm²	8x94	8x94
4 mm²	8x79	8x79
6 mm²	8x60	8x60
10 mm²	8x48	8x48
16 mm²	8x40	8x40
35 mm²	8x30	8x30

Note

The assembly with modular terminals gives consideration to a distance of 10 mm from the end of each mounting rail.
Order recommendations:
TS 35 mounting rail (screw terminal) WDU 2.5 1020000000 / (tension clamp terminal) ZDU 2.5 1608510000 / (tension clamp terminal) PDU 2.5 1896110000
TS 32 mounting rail (screw terminal) SAK 2.5 0279660000
TS 15 mounting rail (screw terminal) AKZ 2.5 0697160000

Number of cable entries

Number of cable entries	A / B	C / D
M12	85	
M16	58	
M20	50	
M25	32	
M32	17	
M40	14	
M50	6	
M63	5	
M75	4	

Note Our IP 68 brass cable glands are used as the reference for these guideline values.

Note

Klippon® TBi FS 806022

Depth 220 mm

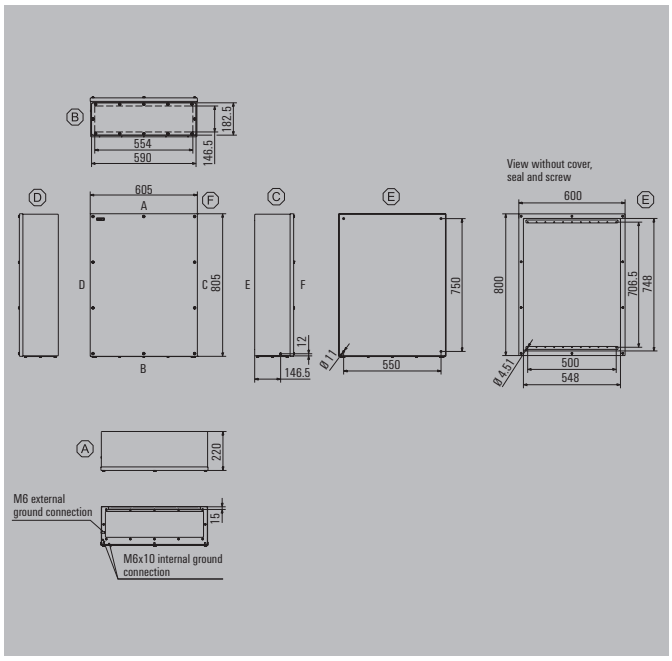

Height/Width/Depth	800 / 600 / 220 mm

Ordering data

Stainless steel 1.4301 304, electropolished	Order No.
0 gland plate	1197400000
1 gland plate - bottom side (B)	1197410000

Note

Max. number of terminals (industry)

Max. number of terminals (industry)	vertical	horizontal
2.5 mm²	8x133	11x94
4 mm²	8x111	11x79
6 mm²	8x84	11x60
10 mm²	8x67	11x48
16 mm²	8x56	11x40
35 mm²	8x42	11x30

Note

The assembly with modular terminals gives consideration to a distance of 10 mm from the end of each mounting rail.
Order recommendations:
TS 35 mounting rail (screw terminal) WDU 2.5 1020000000 / (tension clamp terminal) ZDU 2.5 1608510000 / (tension clamp terminal) PDU 2.5 1896110000
TS 32 mounting rail (screw terminal) SAK 2.5 0279660000
TS 15 mounting rail (screw terminal) AKZ 2.5 0697160000

Accessories

Mounting plates and fastening screws	Order No.
Steel sheet, zinc plated	1310480000
Stainless steel 1.4301	1310390000
Fastening screws for terminal rails	1274150000
Stainless steel spacer M6 x 8, Set of 4	
10 mm length	0935110000
15 mm length	0935120000
20 mm length	0935130000
30 mm length	0935140000
Mild steel nickel plated Spacer M6 x 8, set of 2	
15 mm length	3896100000
20 mm length	3896200000
30 mm length	3896300000
Mounting feet, set containing 4 pieces each	
Stainless steel 1.4301	1289180000

Number of cable entries

Number of cable entries	A / B	C / D
M12	85	
M16	58	
M20	50	
M25	32	
M32	17	
M40	14	
M50	6	
M63	5	
M75	4	

Note Our IP 68 brass cable glands are used as the reference for these guideline values.

Note

Klippon® STB – Small Terminal Box

Steel enclosures

Ideally suited for the energy and process industry and transportation, the Klippon® STB range is the perfect complement to our existing Klippon® enclosure product line. Enclosures of this range comply with international standards such as EN 62208 and EN 60079-0/7 (ATEX).

Some of the many advantages of these cases are:
- Available in stainless steel or in steel sheet
- Higher temperature resistant seals than the standard (extended temperature range of -60 °C to +100 °C / 120 °C, on request)
- Flexible options when mounting the internal rail
- The gasket is protected against compression; this ensures that a permanent and secure seal is maintained.
- Earth studs in the lid and in the enclosure base
- Lasered welding seams offer improved quality
- Delivered with welded mounting feet to ensure an sturdy enclosure installation

Weidmüller can manufacture and supply this enclosure to match customer specifications and fitted with all necessary terminals and cable glands.

Overview of enclosures

Ordering data

Description	Dimensions in mm	Mirror-polish	Electropolished	Powder-coated (RAL7032)
Klippon® STB 1	120 x 120 x 80	1002690000	1058810000	1024970000
Klippon® STB 1.1	150 x 120 x 80	1002750000	1058820000	1024980000
Klippon® STB 2	150 x 150 x 90	1002740000	1058830000	1024990000
Klippon® STB 2.1	190 x 150 x 90	1002730000	1058840000	1025010000
Klippon® STB 3	190 x 190 x100	1002720000	1058850000	1025020000
Klippon® STB 4	250 x 250 x 120	1002710000	1058860000	1025030000
Klippon® STB 5	160 x 380 x 120	1002700000	1058880000	1025040000
Klippon® STB 6	250 x 400 x 130	1002760000	1058870000	1025050000
Note				

Technical Overview

Features

- Mirror-polished or electropolished stainless steel 1.4404 (316L) or powder coated steel sheet 1.0330
- Fitted with a welded, internal C-profile rail (TAS 20) and mounting feet
- Laser cut weld seams
- Approved according to the latest international norms (e.g. ATEX, cULus, GOST)

Note	We deliver enclosures through our assembly service which are ready to be connected and suitable for every application

Technical data

	Stainless steel	Sheet steel
Enclosure material	Stainless steel 1.4404 (316L) 1.50 mm	Steel sheet 1.0330 1.50 mm
Surface finish	Mirror-polished, electropolished	Powder-coated RAL 7032
IP protection class	IP 66	IP 66
NEMA Rating	4, 4x	
Earthing	Enclosure base part: internal / external M6 stainless steel Lid: M6 x 12 stainless steel	Enclosure base part: internal / external M6 stainless steel Lid: M6 x 12 stainless steel
Installation mounting	Welded C-profile rail	Welded C-profile rail
Enclosure attachment	2 external mounting feet with 8 mm holes	2 external mounting feet with 8 mm holes
Lid opening	Completely removable lid with 4 x M5 screws	Completely removable lid with 4 x M5 screws
Impact resistance	7J ATEX	10J industrial version
Gasket material	Silicone -60 °C...+100 °C (120 °C on request)	Silicone -60 °C...+120 °C
Lid screws, torque*	2.5 Nm	2.5 Nm
The gasket is protected against compression in line with the manufacturer's recommendation		
Note	* To secure the lid, please use our hexagonal socket wrench with a 10 mm socket (9009070000)	

Approvals for empty enclosures

	Stainless steel	Sheet steel
ATEX / IECEx certificate	IBExU 07ATEX1147 U / IECEx IBE09.0018U	
ATEX / IECEx marking	Ⓔx II 2 G Ex e II C Gb Ⓔx II 2 D Ex tb IIIC Db IP66	
cULus	E 197061	
Lloyds Register	08/20032	08/20032
Germanischer Lloyd	5935808 HH	
GOST	POCC DE.ME25.B01450	
Installation	The Klippon® STB enclosure range can be pre-fitted in our customer specific production department according to your wishes; as an example, terminals, or other approved components, can be installed as required.	
Note	This enclosure range is component certified. If other electrical components are inserted into the case, additional certification is required.	

Approvals for control and distribution box

	Stainless steel	Sheet steel
ATEX / IECEx certificate	IBExU 07ATEX1148 / IECEx IBE09.0019	*
ATEX / IECEx marking	Ⓔx II 2 G Ex e IIC Gb Tx, Ⓔx II 2 D Ex tb IIIC Db IP6x Txxxx °C Ⓔx I II 1 G Ex ia IIC Ga Tx, Ⓔx II 1 D Ex tb IIIC Db IP6x Txxx °C Ⓔx II 2 G Ex e IIC Gb Tx, Ⓔx II 2 D Ex tb IIIC Db IP6x Txxx °C	
Note	If you have specific requirements for equipment operating in explosive hazard areas, please contact us at Weidmüller to receive a full copy of the certification * The Klippon® STB steel version is not Ex certified	

Klippon® STB 1

Depth 80 mm

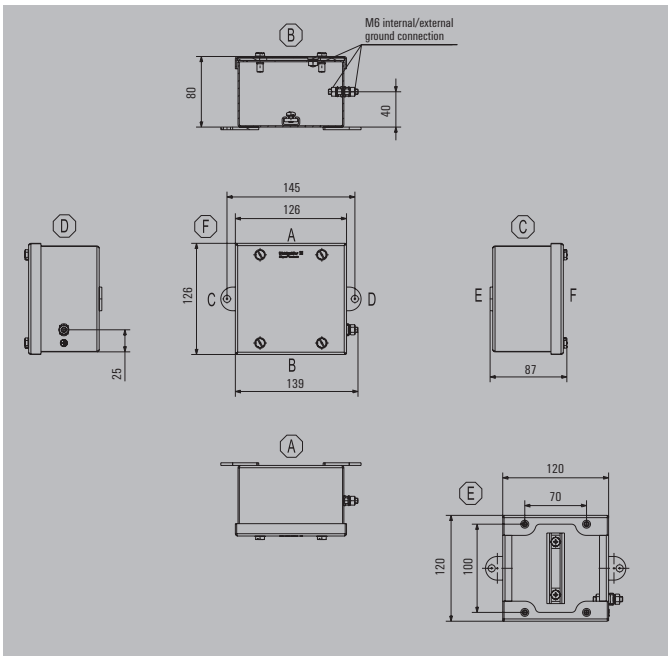

Height/Width/Depth	120 / 120 / 80 mm

Ordering data

Stainless steel 1.4404 (316L)	Order No.
Polished Sheet	1002690000
Electropolished	1058810000
Sheet steel, powder-coated (RAL 7032)	
Powder-coated paint	1024970000

Note The colours of painted enclosures may vary under certain circumstances.

Accessories

Sliding fixing nut with screw	Order No.
M5	0433500000
Socket wrench	
M10 socket wrench	9009070000

Note The enclosure is supplied with a set of sliding fixing nuts, washer, screws M5, to fix the mounting rail TS 35 or TS 32 into the C-Profile.

Max. number of terminals (industry)

Assembly with terminal	vertical	horizontal
2.5 mm²	1x17	
4 mm²	1x14	
6 mm²	1x11	
10 mm²	1x8	
16 mm²	1x7	

Note
The mounting rails are designed to be installed directly.
Assembly with terminals provides for 10 mm clearance to the ends of the mounting rail.
Recommended order:
TS 35 mounting rail (screw terminal) WDU 2.5 1020000000 / (tension clamp terminal) ZDU 2.5 1608510000
TS 32 mounting rail (screw terminal) SAK 2.5 0279660000
TS 15 mounting rail (screw terminal) AKZ 2.5 0697160000

Number of cable entries

Number of cable entries	A / B	C / D
M12	10	8
M16	6	4
M20	6	4
M25	3	2
M32	2	1
M40	2	1
M50		
M63		

Note

Klippon® STB 1.1

Depth 80 mm

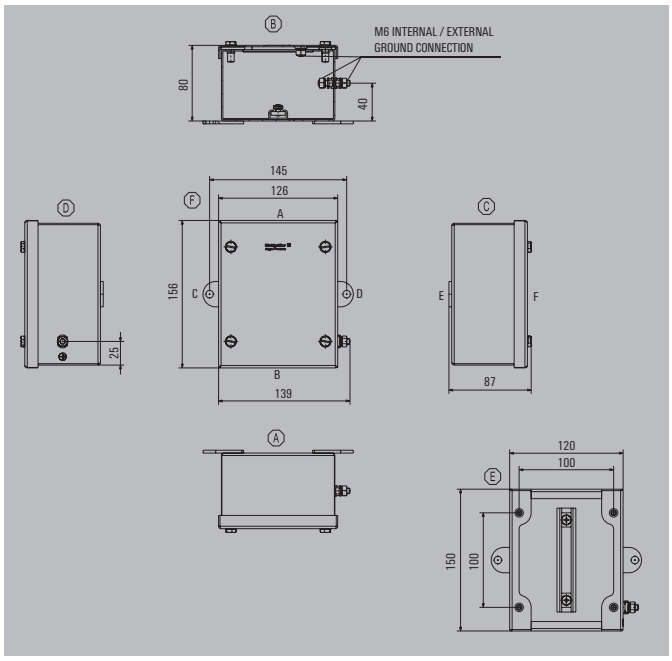

Height/Width/Depth	150 / 120 / 80 mm

Ordering data

Stainless steel 1.4404 (316L)	Order No.
Polished Sheet	1002750000
Electropolished	1058820000
Sheet steel, powder-coated (RAL 7032)	
Powder-coated paint	1024980000

Note The colours of painted enclosures may vary under certain circumstances.

Accessories

Sliding fixing nut with screw	Order No.
M5	0433500000
Socket wrench	
M10 socket wrench	9009070000

Note The enclosure is supplied with a set of sliding fixing nuts, washer, screws M5, to fix the mounting rail TS 35 or TS 32 into the C-Profile.

Max. number of terminals (industry)

Assembly with terminal	vertical	horizontal
2.5 mm²	1x23	
4 mm²	1x19	
6 mm²	1x14	
10 mm²	1x11	
16 mm²	1x9	

Note
The mounting rails are designed to be installed directly.
Assembly with terminals provides for 10 mm clearance to the ends of the mounting rail.
Recommended order:
TS 35 mounting rail (screw terminal) WDU 2.5 1020000000 / (tension clamp terminal) ZDU 2.5 1608510000
TS 32 mounting rail (screw terminal) SAK 2.5 0279660000
TS 15 mounting rail (screw terminal) AKZ 2.5 0697160000

Number of cable entries

Number of cable entries	A / B	C / D
M12	10	10
M16	6	6
M20	6	6
M25	3	2
M32	2	2
M40	2	1
M50		
M63		

Note

Klippon® STB 2

Depth 90 mm

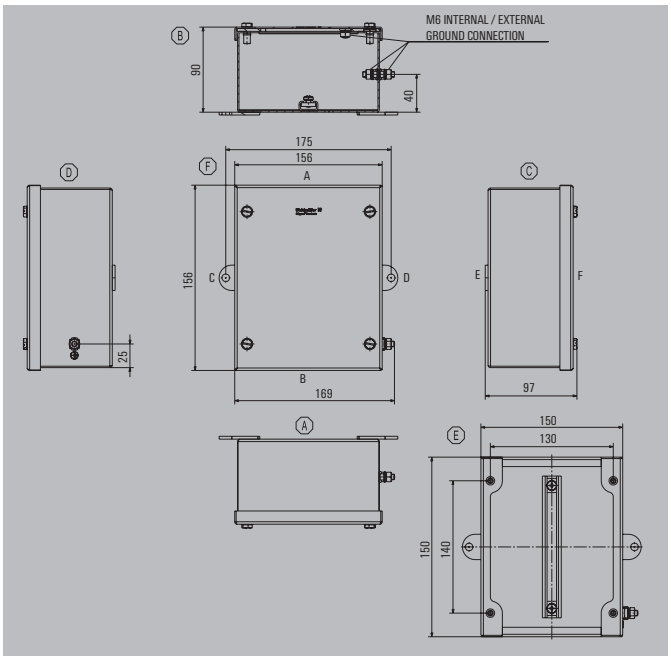

Height/Width/Depth	150 / 150 / 90 mm

Ordering data

Stainless steel 1.4404 (316L)	Order No.
Polished Sheet	1002740000
Electropolished	1058830000
Sheet steel, powder-coated (RAL 7032)	
Powder-coated paint	1024990000

Note The colours of painted enclosures may vary under certain circumstances.

Accessories

Sliding fixing nut with screw	Order No.
M5	0433500000
Socket wrench	
M10 socket wrench	9009070000

Note The enclosure is supplied with a set of sliding fixing nuts, washer, screws M5, to fix the mounting rail TS 35 or TS 32 into the C-Profile.

Max. number of terminals (industry)

Assembly with terminal	vertical	horizontal
2.5 mm²	1x23	
4 mm²	1x19	
6 mm²	1x14	
10 mm²	1x11	
16 mm²	1x9	

Note
The mounting rails are designed to be installed directly.
Assembly with terminals provides for 10 mm clearance to the ends of the mounting rail.
Recommended order:
TS 35 mounting rail (screw terminal) WDU 2.5 1020000000 / (tension clamp terminal) ZDU 2.5 1608510000
TS 32 mounting rail (screw terminal) SAK 2.5 0279660000
TS 15 mounting rail (screw terminal) AKZ 2.5 0697160000

Number of cable entries

Number of cable entries	A / B	C / D
M12	15	15
M16	10	8
M20	8	6
M25	3	2
M32	3	2
M40	2	2
M50	1	1
M63		

Note

Klippon® STB 2.1

Depth 90 mm

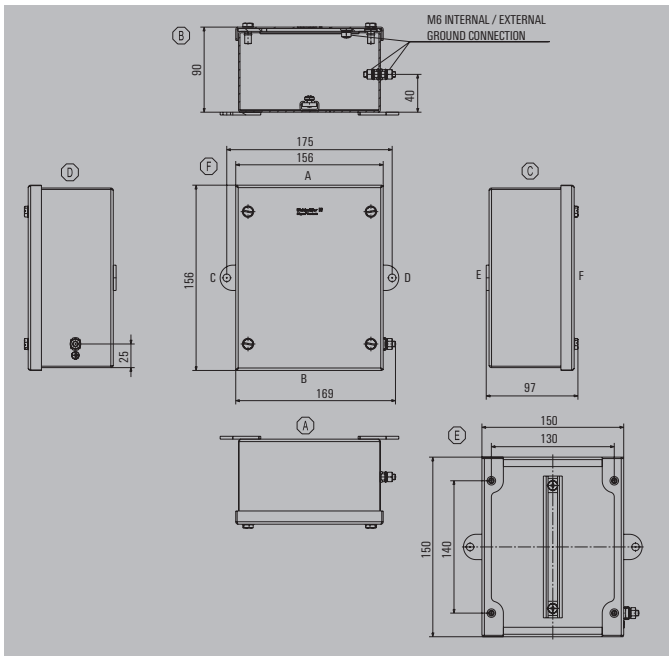

Height/Width/Depth	190 / 150 / 90 mm

Ordering data

Stainless steel 1.4404 (316L)	Order No.
Polished Sheet	1002730000
Electropolished	1058840000
Sheet steel, powder-coated (RAL 7032)	
Powder-coated paint	1025010000

Note The colours of painted enclosures may vary under certain circumstances.

Accessories

Sliding fixing nut with screw	Order No.
M5	0433500000
Socket wrench	
M10 socket wrench	9009070000

Note The enclosure is supplied with a set of sliding fixing nuts, washer, screws M5, to fix the mounting rail TS 35 or TS 32 into the C-Profile.

Max. number of terminals (industry)

Assembly with terminal	vertical	horizontal
2.5 mm²	1x30	
4 mm²	1x25	
6 mm²	1x20	
10 mm²	1x15	
16 mm²	1x13	

Note
The mounting rails are designed to be installed directly.
Assembly with terminals provides for 10 mm clearance to the ends of the mounting rail.
Recommended order:
TS 35 mounting rail (screw terminal) WDU 2.5 1020000000 / (tension clamp terminal) ZDU 2.5 1608510000
TS 32 mounting rail (screw terminal) SAK 2.5 0279660000
TS 15 mounting rail (screw terminal) AKZ 2.5 0697160000

Number of cable entries

Number of cable entries	A / B	C / D
M12	15	18
M16	10	10
M20	8	10
M25	3	3
M32	3	3
M40	2	2
M50	1	1
M63		

Note

Klippon® STB 3

Depth 100 mm

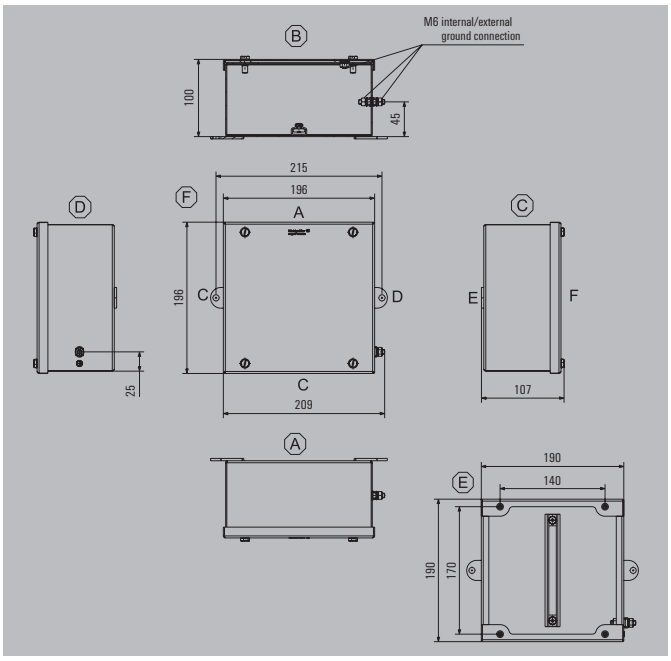

Height/Width/Depth	190 / 190 / 100 mm

Ordering data

Stainless steel 1.4404 (316L)	Order No.
Polished Sheet	1002720000
Electropolished	1058850000
Sheet steel, powder-coated (RAL 7032)	
Powder-coated paint	1025020000

Note The colours of painted enclosures may vary under certain circumstances.

Accessories

Sliding fixing nut with screw	Order No.
M5	0433500000
Socket wrench	
M10 socket wrench	9009070000

Note The enclosure is supplied with a set of sliding fixing nuts, washer, screws M5, to fix the mounting rail TS 35 or TS 32 into the C-Profile.

Max. number of terminals (industry)

Assembly with terminal	vertical	horizontal
2.5 mm²	1x30	
4 mm²	1x25	
6 mm²	1x20	
10 mm²	1x15	
16 mm²	1x13	

Note
The mounting rails are designed to be installed directly.
Assembly with terminals provides for 10 mm clearance to the ends of the mounting rail.
Recommended order:
TS 35 mounting rail (screw terminal) WDU 2.5 1020000000 / (tension clamp terminal) ZDU 2.5 1608510000
TS 32 mounting rail (screw terminal) SAK 2.5 0279660000
TS 15 mounting rail (screw terminal) AKZ 2.5 0697160000

Number of cable entries

Number of cable entries	A / B	C / D
M12	21	21
M16	15	15
M20	10	8
M25	8	6
M32	3	3
M40	3	2
M50	2	1
M63	1	

Note

Klippon® STB 4

Depth 120 mm

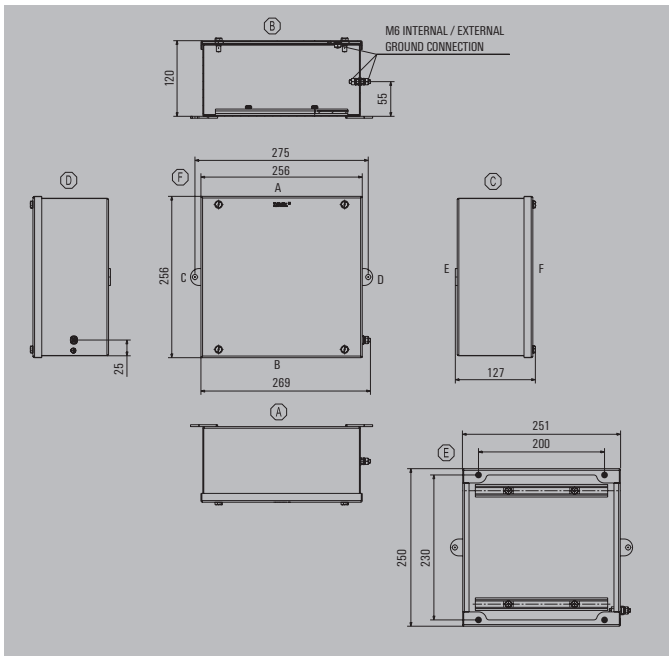

Height/Width/Depth	250 / 250 / 120 mm

Ordering data

Stainless steel 1.4404 (316L)	Order No.
Polished Sheet	1002710000
Electropolished	1058860000
Sheet steel, powder-coated (RAL 7032)	
Powder-coated paint	1025030000

Note The colours of painted enclosures may vary under certain circumstances.

Accessories

Sliding fixing nut with screw	Order No.
M5	0433500000
Socket wrench	
M10 socket wrench	9009070000

Note The enclosure is supplied with a set of sliding fixing nuts, washer, screws M5, to fix the mounting rail TS 35 or TS 32 into the C-Profile.

Max. number of terminals (industry)

Assembly with terminal	vertical	horizontal
2.5 mm²	2x42	2x42
4 mm²	2x35	2x35
6 mm²	2x27	2x27
10 mm²	2x22	2x22
16 mm²	2x18	2x18

Note
The mounting rails are designed to be installed directly.
Assembly with terminals provides for 10 mm clearance to the ends of the mounting rail.
Recommended order:
TS 35 mounting rail (screw terminal) WDU 2.5 1020000000 / (tension clamp terminal) ZDU 2.5 1608510000
TS 32 mounting rail (screw terminal) SAK 2.5 0279660000
TS 15 mounting rail (screw terminal) AKZ 2.5 0697160000

Number of cable entries

Number of cable entries	A / B	C / D
M12	24	24
M16	21	21
M20	12	12
M25	10	10
M32	8	8
M40	3	3
M50	3	2
M63	2	1

Note

Klippon® STB 5

Depth 120 mm

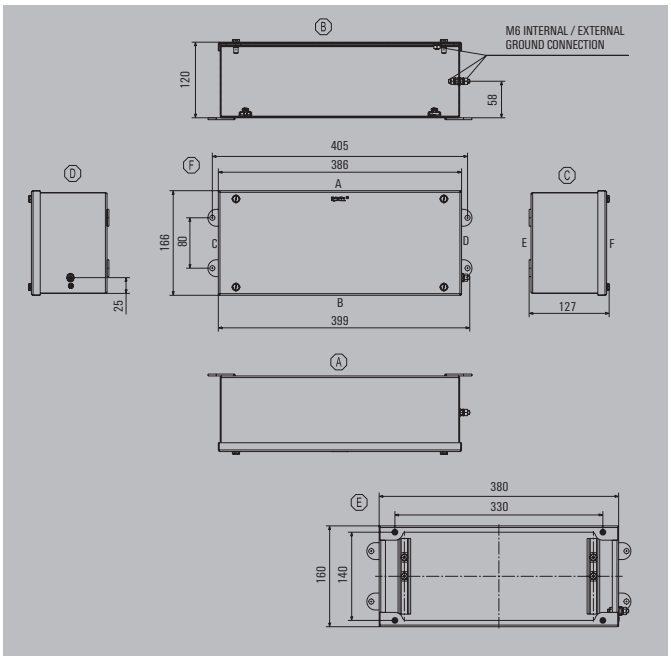

Height/Width/Depth	160 / 380 / 120 mm

Ordering data

Stainless steel 1.4404 (316L)	Order No.
Polished Sheet	1002700000
Electropolished	1058880000
Sheet steel, powder-coated (RAL 7032)	
Powder-coated paint	1025040000

Note The colours of painted enclosures may vary under certain circumstances.

Accessories

Sliding fixing nut with screw	Order No.
M5	0433500000
Socket wrench	
M10 socket wrench	9009070000

Note The enclosure is supplied with a set of sliding fixing nuts, washer, screws M5, to fix the mounting rail TS 35 or TS 32 into the C-Profile.

Max. number of terminals (industry)

Assembly with terminal	vertical	horizontal
2.5 mm²	3x25	1x68
4 mm²	3x21	1x57
6 mm²	3x16	1x44
10 mm²	3x12	1x35
16 mm²	3x10	1x29

Note
The mounting rails are designed to be installed directly.
Assembly with terminals provides for 10 mm clearance to the ends of the mounting rail.
Recommended order:
TS 35 mounting rail (screw terminal) WDU 2.5 1020000000 / (tension clamp terminal) ZDU 2.5 1608510000
TS 32 mounting rail (screw terminal) SAK 2.5 0279660000
TS 15 mounting rail (screw terminal) AKZ 2.5 0697160000

Number of cable entries

Number of cable entries	A / B	C / D
M12	64	20
M16	33	12
M20	30	12
M25	16	6
M32	10	4
M40	6	2
M50	4	1
M63	2	1

Note

Klippon® STB 6

Depth 130 mm

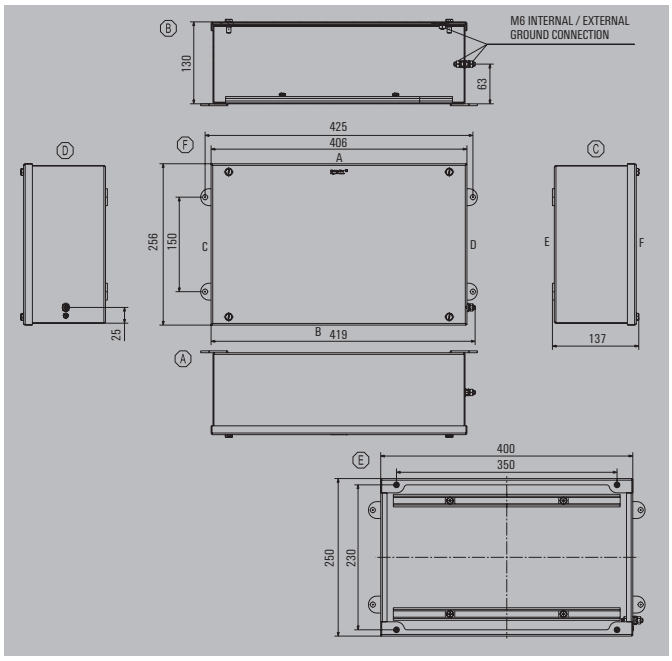

Height/Width/Depth	250 / 400 / 130 mm

Ordering data

Stainless steel 1.4404 (316L)	Order No.
Polished Sheet	1002760000
Electropolished	1058870000
Sheet steel, powder-coated (RAL 7032)	
Powder-coated paint	1025050000

Note The colours of painted enclosures may vary under certain circumstances.

Accessories

Sliding fixing nut with screw	Order No.
M5	0433500000
Socket wrench	
M10 socket wrench	9009070000

Note The enclosure is supplied with a set of sliding fixing nuts, washer, screws M5, to fix the mounting rail TS 35 or TS 32 into the C-Profile.

Max. number of terminals (industry)

Assembly with terminal	vertical	horizontal
2.5 mm²	3x42	2x72
4 mm²	3x35	2x60
6 mm²	3x27	2x46
10 mm²	3x22	2x37
16 mm²	3x18	2x30

Note
The mounting rails are designed to be installed directly.
Assembly with terminals provides for 10 mm clearance to the ends of the mounting rail.
Recommended order:
TS 35 mounting rail (screw terminal) WDU 2.5 1020000000 / (tension clamp terminal) ZDU 2.5 1608510000
TS 32 mounting rail (screw terminal) SAK 2.5 0279660000
TS 15 mounting rail (screw terminal) AKZ 2.5 0697160000

Number of cable entries

Number of cable entries	A / B	C / D
M12	64	36
M16	33	21
M20	30	18
M25	16	10
M32	10	8
M40	6	3
M50	4	2
M63	2	2

Note

Klippon® K – Aluminium enclosures

Klippon® K range enclosures can be used in a variety of applications, e.g. for mounting terminals, switches, power supplies, operational and display elements or electronic modules.

The extensive Klippon® K enclosure range has the following advantages:
- More flexibility – 19 different sizes
- Available in two surface finishes – powder-coated and natural
- Mounting holes not within the sealed area
- Fastening thread to attach mounting rails and plates
- Closed moulded gasket (no glue seam)

Weidmüller can manufacture and supply this enclosure to match customer specifications and fitted with all necessary terminals and cable glands.

Overview of enclosures

Ordering data

Description	Dimensions in mm	Powder-coated (RAL 7001)		Unpainted		
		Standard		Standard		Ex enclosure
		CR moulded seal	Silicone moulded seal*	CR moulded seal	Silicone moulded seal*	Silicone moulded seal
Klippon® K 0	45 x 50 x 30	9529090000	1937920000	0573200000	1939760000	
Klippon® K 01	64 x 58 x 34	9529100000	1937850000	1565240000	1939540000	
Klippon® K 02	64 x 98 x 34	9529110000	1937840000	1565250000	1939550000	
Klippon® K 1	70 x 70 x 45	9529120000	1937630000	0342000000	1939560000	9526840000
Klippon® K 11	80 x 75 x 57	9529130000	1937910000	0573300000	1939570000	9526850000
Klippon® K 2	70 x 100 x 45	9529140000	1937930000	0342100000	1939580000	9526860000
Klippon® K 21	80 x 125 x 57	9529150000	1937830000	0573400000	1939590000	9526870000
Klippon® K 3	70 x 165 x 45	9529160000	1937900000	0342200000	1939600000	9526880000
Klippon® K 31	80 x 175 x 57	9529170000	1937820000	0573500000	1939610000	9526890000
Klippon® K 32	80 x 250 x 55	9529180000	1937810000	1565260000	1939620000	9526900000
Klippon® K 4	82 x 130 x 72	9529190000	1937890000	0342300000	1939630000	9526910000
Klippon® K 41	120 x 122 x 81	9529200000	1937800000	1565270000	1939640000	9526920000
Klippon® K 5	130 x 170 x 90	9529210000	1937860000	0342400000	1939650000	9526930000
Klippon® K 51	120 x 220 x 81	9529220000	1937750000	1565280000	1939660000	9526940000
Klippon® K 52	160 x 160 x 91	9529230000	1937740000	1565290000	1939670000	9526950000
Klippon® K 6	160 x 200 x 100	9529240000	1937870000	0342500000	1939690000	9526960000
Klippon® K 61	160 x 260 x 91	9529250000	1937730000	0573600000	1939700000	9526970000
Klippon® K 7	160 x 350 x 100	9529260000	1937880000	0342600000	1939710000	9526980000
Klippon® K 71	230 x 280 x 111	9529270000	1937720000	0573700000	1939730000	9526990000
Note	*Delivery time on request					

Technical Overview

Features

- Two surfaces: natural and powder-coated
- High IP protection up to IP 68
- Moulded silicone gasket for applications with high temperatures
- A uniform Torx®-slotted screw head is used for over 19 different enclosure sizes.
- Alloy is resistant to salt water
- Approved according to the latest international standards (e.g. ATEX, cULus, GOST)

Note	We deliver enclosures through our assembly service which are ready to be connected and suitable for every application

Technical data

	Ex	Standard
Enclosure material	High quality aluminium alloy (Al-Si12)	High quality aluminium alloy (Al-Si12)
Surface, untreated	Smooth	Smooth
Surface, painted		Silver grey, textured, similar to RAL 7001
Painting		40 µm paint thickness
IP protection class	IP 66, IP 67	IP 66, IP 67 and IP 68*
NEMA		4, 4x
Earthing outside	Earthing studs, M4	
Installation mounting	Flexible DIN rail mounting	Flexible DIN rail mounting
Enclosure mounting	Direct mounting with optional mounting brackets (from a size of 120 x 122 x 81 Klippon® K 41)	Direct mounting with optional mounting brackets (from a size of 120 x 122 x 81 Klippon® K 41)
Lid fixing	Captive stainless steel Torx® 20 or slotted screws.	Captive stainless steel Torx® 20 or slotted screws.
Impact resistance	7J	10J
Gasket material	Silicone (VMQ)	Chloroprene / Silicone (VMQ)
Temperature range	-50 °C...+135 °C	-40 °C...+80 °C with chloroprene gasket / -50 °C...+135 °C with silicone gasket
Lid screws, torque**	2.5 Nm	2.5 Nm
Note	* (t=72h; h=1m) ** To secure the lid we recommend the use of our Torx® TH20 screwdriver (9009160000) Depending on the screw head size, our slotted screwdriver may also be used as an alternative	

Approvals for empty enclosures

	Ex	Standard
ATEX certificate	KEMA 02ATEX2088 U	
ATEX marking	II 2 G Ex e II IP66/IP67	
IECEx certificate	IECEXIBE 13.0001 U	
IECEx marking	Ex e IIC Gb	
GOST Ex	POCC DE.ME92.B00362	
GOST	POCC DE.ME25.B01450	POCC DE.ME25.B01450
cULus		E 197061
Russian Maritime Register	11040200	11040200
Germanischer Lloyd	4453607 HH	4453607 HH
Installation	The Klippon® K enclosure range can be pre-fitted in our customer specific production department according to your wishes; as an example, terminals, or other approved components, can be installed as required.	
Note	This enclosure range is component certified. If other electrical components are inserted into the case, additional certification is required.	

Approvals for control and distribution box

	Ex	Standard
ATEX certificate	KEMA 00ATEX8501 X	
ATEX marking	Ex II 2 GD Ex e II T6/T3 IP66/IP67 Ex II 2 (1) GD Ex e[ia] IIG T6/T3	
IECEx certificate	IECEXIBE 13.0002	
IECEx marking	Ex e IIC T Gb Ex tb IIIC T °C Db	
Note	If you have specific requirements for equipment operating in explosive hazard areas, please contact us at Weidmüller to receive a full copy of the certification.	

Klippon® K 0

Depth 30 mm

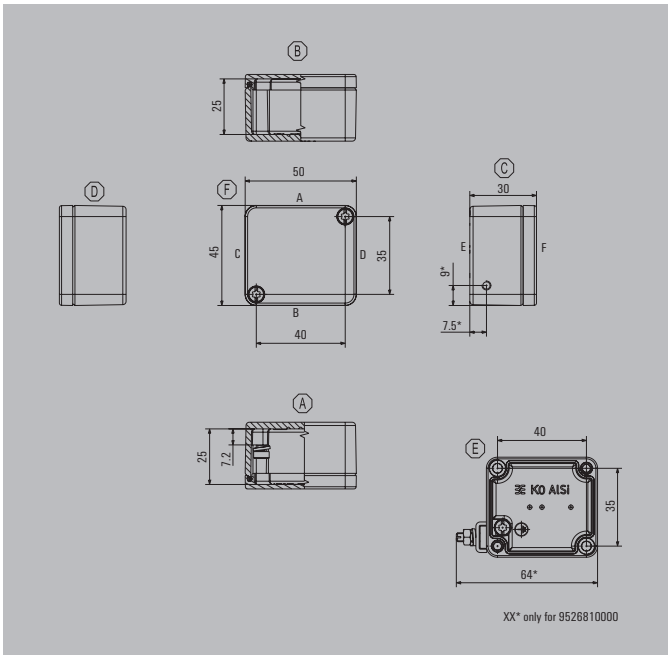

Height/Width/Depth	45 / 50 / 30 mm

Ordering data

powder-coated (RAL 7001)	Order No.
Standard (CR seal)	9529090000
Standard (silicone seal)**	1937920000
unpainted	
Standard (CR seal)	0573200000

Note The colours of painted enclosures may vary under certain circumstances. **Delivery time available on request.

Accessories

Torx® screwdriver	Order No.
Uninsulated Torx® TH20	9009160000

Max. number of terminals (industry)

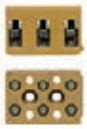

Assembly with terminal	vertical	horizontal
2.5 mm²	1x1*	1x1*
4 mm²	1x1*	1x1*
6 mm²		
10 mm²		
16 mm²		

Note *Please refer to the Terminal Block catalogue or the SAK Range for more information about assembling the enclosures with terminal blocks. There are no prescribed possible attachment points in the enclosure.

Number of cable entries

Number of cable entries	A / B	C / D
M12	1	1
M16	1	1
M20		
M25		
M32		
M40		
M50		
M63		

Note **Our IP 68 brass cable glands are used as the reference for these guideline values.

Note

Klippon® K 01

Depth 34 mm

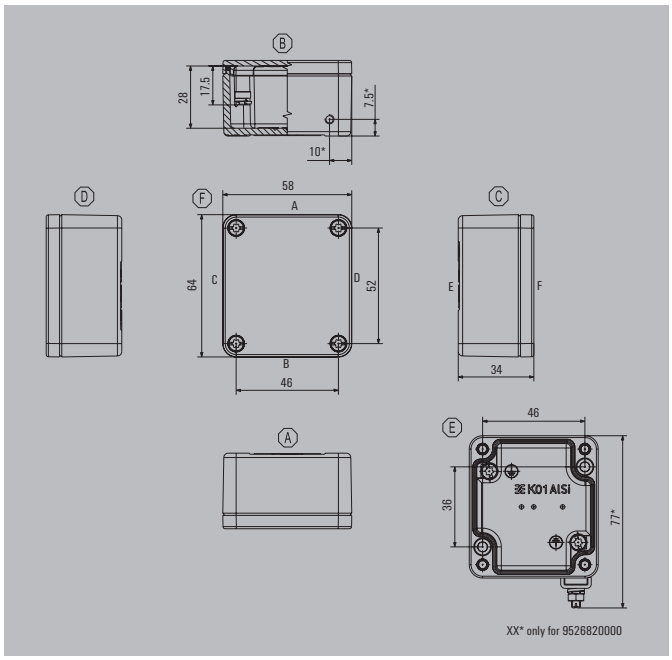

Height/Width/Depth	64 / 58 / 34 mm

Ordering data

powder-coated (RAL 7001)	Order No.
Standard (CR seal)	9529100000
Standard (silicone seal)**	1937850000
unpainted	
Standard (CR seal)	1565240000

Note The colours of painted enclosures may vary under certain circumstances. **Delivery time available on request.

Accessories

Torx® screwdriver	Order No.
Uninsulated Torx® TH20	9009160000

Max. number of terminals (industry)

Assembly with terminal	vertical	horizontal
2.5 mm²	1x1*	1x1*
4 mm²	1x1*	1x1*
6 mm²		
10 mm²		
16 mm²		

Note *Please refer to the Terminal Block catalogue or the SAK Range for more information about assembling the enclosures with terminal blocks. There are no prescribed possible attachment points in the enclosure.

Number of cable entries

Number of cable entries	A / B	C / D
M12	1	1
M16	1	1
M20		
M25		
M32		
M40		
M50		
M63		

Note **Our IP 68 brass cable glands are used as the reference for these guideline values.

Note

Klippon® K 02

Depth 34 mm

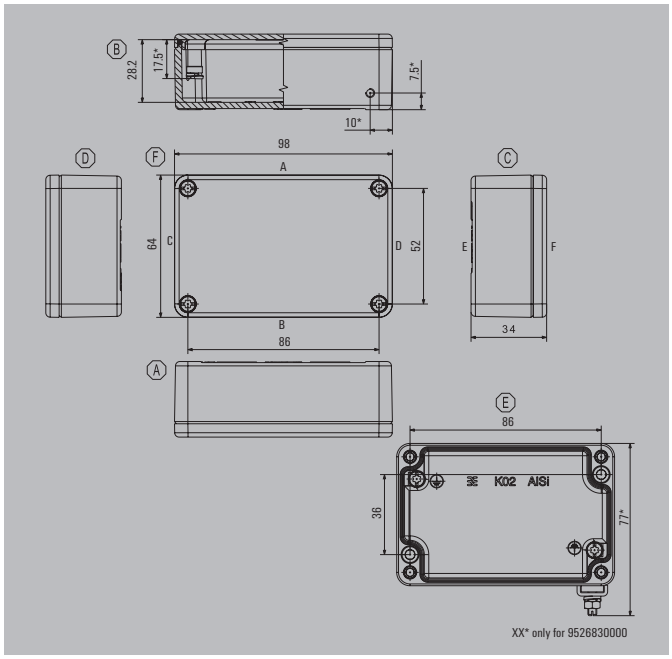

Height/Width/Depth	64 / 98 / 34 mm

Ordering data

powder-coated (RAL 7001)	Order No.
Standard (CR seal)	9529110000
Standard (silicone seal)**	1937840000
unpainted	
Standard (CR seal)	1565250000

Note The colours of painted enclosures may vary under certain circumstances. **Delivery time available on request.

Accessories

Torx® screwdriver	Order No.
Uninsulated Torx® TH20	9009160000

Max. number of terminals (industry)

Assembly with terminal	vertical	horizontal
2.5 mm²	1x1*	1x1*
4 mm²	1x1*	1x1*
6 mm²		
10 mm²		
16 mm²		

Note *Please refer to the Terminal Block catalogue or the SAK Range for more information about assembling the enclosures with terminal blocks. There are no prescribed possible attachment points in the enclosure.

Number of cable entries

Number of cable entries	A / B	C / D
M12	3	1
M16	3	1
M20	2	
M25		
M32		
M40		
M50		
M63		

Note **Our IP 68 brass cable glands are used as the reference for these guideline values.

Note

Klippon® K 1

Depth 45 mm

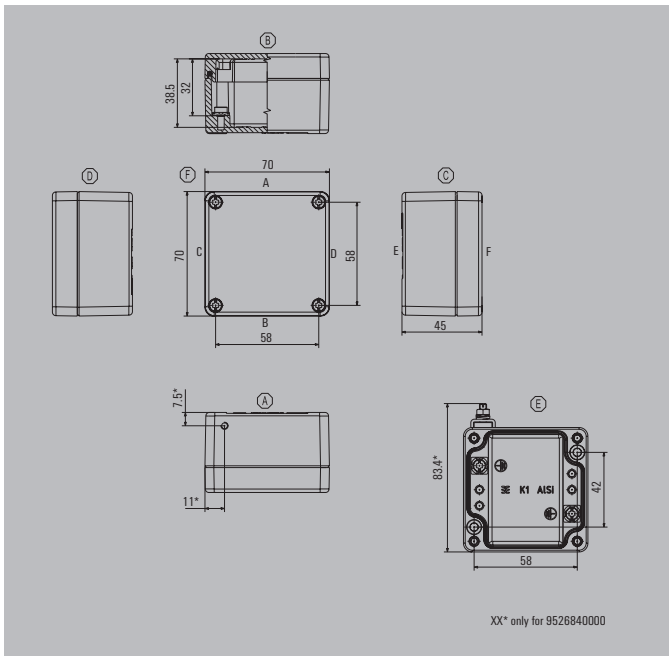

Height/Width/Depth	70 / 70 / 45 mm

Ordering data

powder-coated (RAL 7001)	Order No.
Standard (CR seal)	9529120000
Standard (silicone seal)**	1937630000
unpainted	
Standard (CR seal)	0342000000
Ex enclosure (silicone seal)	9526840000

Note The colours of painted enclosures may vary under certain circumstances. **Delivery time available on request.

Accessories

Terminal rail, Set	Order No.
15 mm width	1909980000
Mounting plate	
Steel sheet, zinc plated	1905280000
Torx® screwdriver	
Uninsulated Torx® TH20	9009160000

Note The accessory sets contain the necessary mounting material.

Max. number of terminals (industry)

Assembly with terminal	vertical	horizontal
2.5 mm²	1x1*	1x5
4 mm²	1x1*	1x1*
6 mm²		
10 mm²		
16 mm²		

Note *Please refer to the Terminal Block Catalogue or the SAK Range for more information about populating the enclosures with terminal blocks. For vertical installations, we recommend using not more than one BK 4 or BK 4 CRN (0625120000). For horizontal installations with 2.5mm² 1x5 AKZ terminal blocks (only possible on a TS 15) for 4mm², use not more than one BK 4. There are no pre-defined mounting points set within this enclosure for installing internal equipment in a vertical position.

Number of cable entries

Number of cable entries	A / B	C / D
M12	2	1
M16	2	1
M20	1	
M25		
M32		
M40		
M50		
M63		

Note **Our IP 68 brass cable glands are used as the reference for these guideline values.

Dimensions of mounting plate

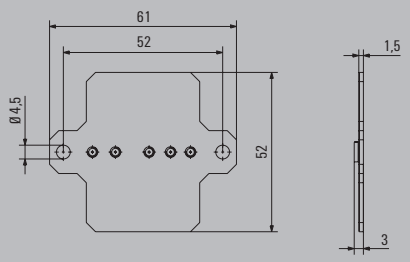

Klippon® K 11

Depth 57 mm

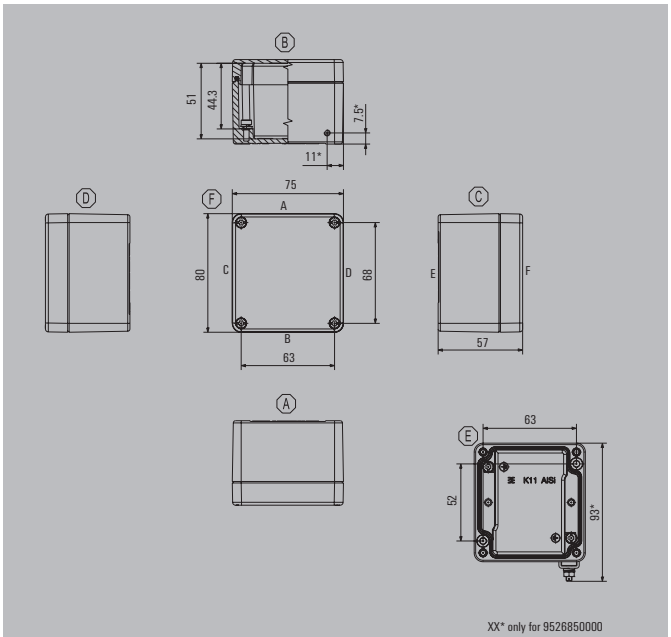

Height/Width/Depth	80 / 75 / 57 mm

Ordering data

powder-coated (RAL 7001)	Order No.
Standard (CR seal)	9529130000
Standard (silicone seal)**	1937910000
unpainted	
Standard (CR seal)	0573300000
Ex enclosure (silicone seal)	9526850000

Note The colours of painted enclosures may vary under certain circumstances. **Delivery time available on request.

Accessories

Terminal rail, Set	Order No.
15 mm width	1909990000
Mounting plate	
Steel sheet, zinc plated	3073000000
Hinge, diecast zinc, Set	
	1580360000
Torx® screwdriver	
Uninsulated Torx® TH20	9009160000

Note The accessory sets contain the necessary mounting material. Necessary on use of 1 hinge per longitudinal side.

Max. number of terminals (industry)

Assembly with terminal	vertical	horizontal
2.5 mm²	1x1*	1x5
4 mm²	1x1*	1x4
6 mm²		
10 mm²		
16 mm²		

Note *Please refer to the Terminal Block Catalogue or the SAK Range for more information about populating the enclosures with terminal blocks. We recommend at most one BK 6 or BK 6 CRN (0625220000) in vertical installations. There are no pre-defined mounting points set within this enclosure for installing internal equipment in a vertical position.

Number of cable entries

Number of cable entries	A / B	C / D
M12	2	2
M16	2	2
M20	1	1
M25	1	
M32		
M40		
M50		
M63		

Note **Our IP 68 brass cable glands are used as the reference for these guideline values.

Dimensions of mounting plate

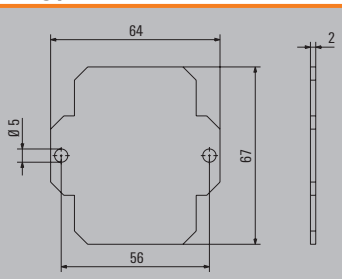

Klippon® K 2

Depth 45 mm

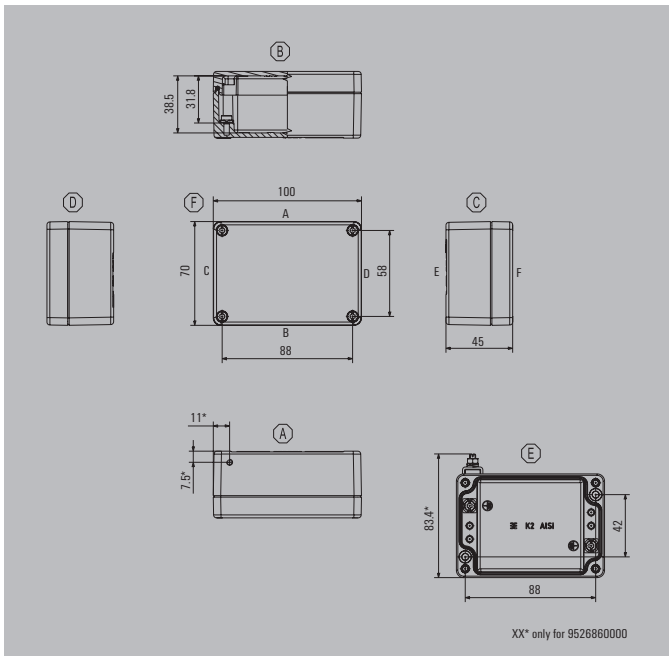

Height/Width/Depth	70 / 100 / 45 mm

Ordering data

powder-coated (RAL 7001)	Order No.
Standard (CR seal)	9529140000
Standard (silicone seal)**	1937930000
unpainted	
Standard (CR seal)	0342100000
Ex enclosure (silicone seal)	9526860000

Note The colours of painted enclosures may vary under certain circumstances. **Delivery time available on request.

Accessories

Terminal rail, Set	Order No.
15 mm width	1910010000
Mounting plate	
Steel sheet, zinc plated	1905270000
Torx® screwdriver	
Uninsulated Torx® TH20	9009160000

Note The accessory sets contain the necessary mounting material.

Max. number of terminals (industry)

Assembly with terminal	vertical	horizontal
2.5 mm²	*	1x10
4 mm²	*	
6 mm²		
10 mm²		
16 mm²		

Note *Please refer to the Terminal Block Catalogue or the SAK Range for more information about populating the enclosures with terminal blocks. We recommend at most one BK 6 or BK 6 CRN (0625220000) for vertical installations. There are no pre-defined mounting points set within this enclosure for installing internal equipment in a vertical position.

Number of cable entries

Number of cable entries	A / B	C / D
M12	3	1
M16	3	1
M20	2	
M25		
M32		
M40		
M50		
M63		

Note **Our IP 68 brass cable glands are used as the reference for these guideline values.

Dimensions of mounting plate

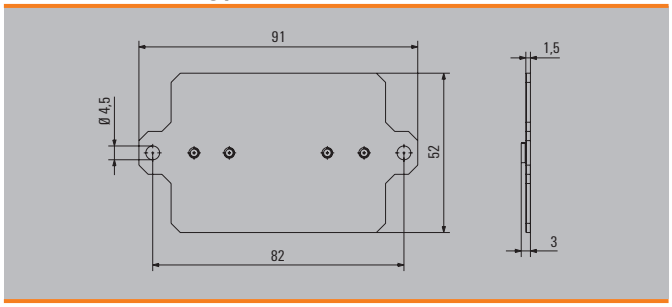

Klippon® K 21

Depth 57 mm

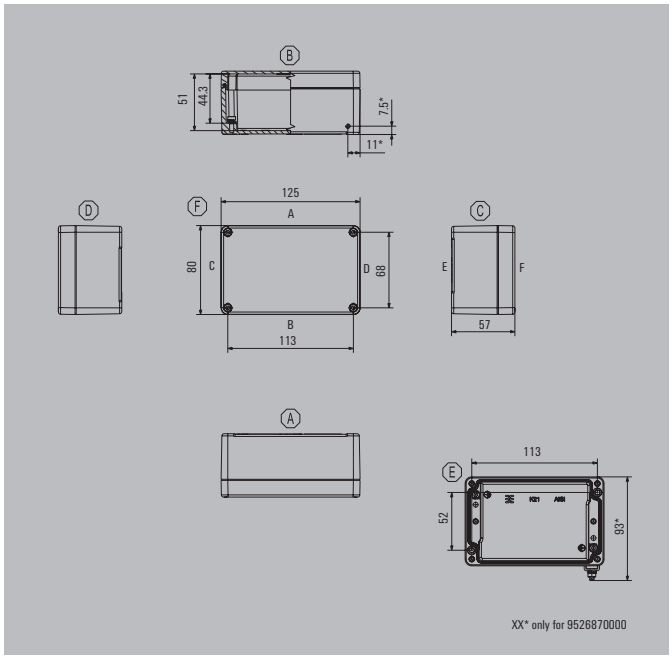

Height/Width/Depth	80 / 125 / 57 mm

Ordering data

powder-coated (RAL 7001)	Order No.
Standard (CR seal)	9529150000
Standard (silicone seal)**	1937830000
unpainted	
Standard (CR seal)	0573400000
Ex enclosure (silicone seal)	9526870000

Note The colours of painted enclosures may vary under certain circumstances. **Delivery time available on request.

Accessories

Terminal rail, Set	Order No.
15 mm width	1910020000
Mounting plate	
Steel sheet, zinc plated	3073020000
Hinge, diecast zinc, Set	
	1580360000
Torx® screwdriver	
Uninsulated Torx® TH20	9009160000

Note The accessory sets contain the necessary mounting material. Necessary on use of 1 hinge per longitudinal side.

Max. number of terminals (industry)

Assembly with terminal	vertical	horizontal
2.5 mm²	*	1x15
4 mm²	*	1x12
6 mm²		
10 mm²		
16 mm²		

Note *Please refer to the Terminal Block Catalogue or the SAK Range for more information about populating the enclosures with terminal blocks. We recommend BK 6 or BK 6 CRN (0625220000) for vertical installations. There are no pre-defined mounting points set within this enclosure for installing internal equipment in a vertical position.

Number of cable entries

Number of cable entries	A / B	C / D
M12	6	2
M16	4	2
M20	3	1
M25	2	
M32		
M40		
M50		
M63		

Note **Our IP 68 brass cable glands are used as the reference for these guideline values.

Dimensions of mounting plate

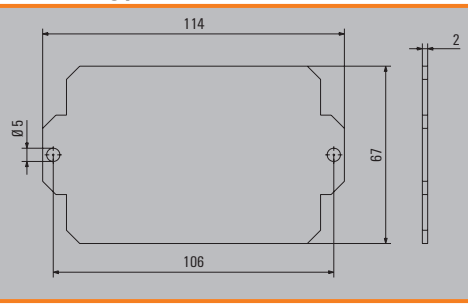

Klippon® K 3

Depth 45 mm

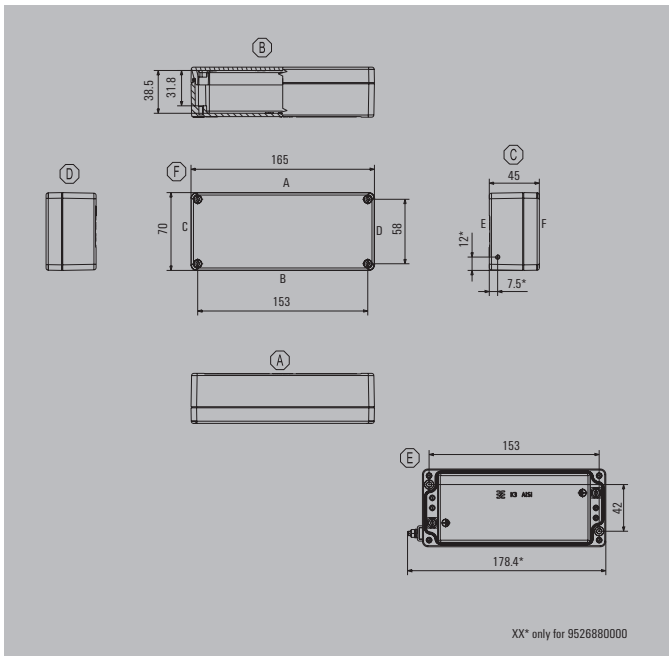

Height/Width/Depth	70 / 165 / 45 mm

Ordering data

powder-coated (RAL 7001)	Order No.
Standard (CR seal)	9529160000
Standard (silicone seal)**	1937900000
unpainted	
Standard (CR seal)	0342200000
Ex enclosure (silicone seal)	9526880000

Note The colours of painted enclosures may vary under certain circumstances. **Delivery time available on request.

Accessories

Terminal rail, Set	Order No.
15 mm width	1910030000
Mounting plate	
Steel sheet, zinc plated	1898210000
More tightly drawn	1899630000
Torx® screwdriver	
Uninsulated Torx® TH20	9009160000

Note The accessory sets contain the necessary mounting material.

Max. number of terminals (industry)

Assembly with terminal	vertical	horizontal
2.5 mm²	*	1x22
4 mm²	*	
6 mm²		
10 mm²		
16 mm²		

Note *Please refer to the Terminal Block Catalogue or the SAK Range for more information about populating the enclosures with terminal blocks. We recommend BK 6 or BK 6 CRN (0625220000) for vertical installations. There are no pre-defined mounting points set within this enclosure for installing internal equipment in a vertical position.

Number of cable entries

Number of cable entries	A / B	C / D
M12	6	1
M16	5	1
M20	4	
M25		
M32		
M40		
M50		
M63		

Note **Our IP 68 brass cable glands are used as the reference for these guideline values.

Dimensions of mounting plate

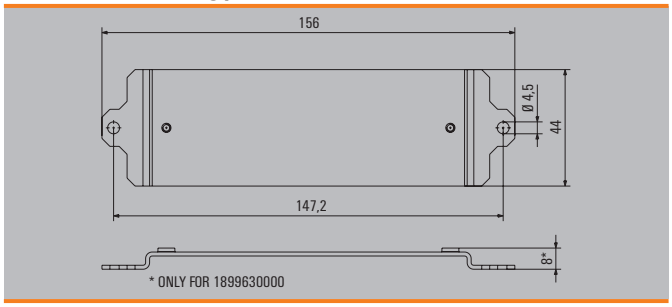

Klippon® K 31

Depth 57 mm

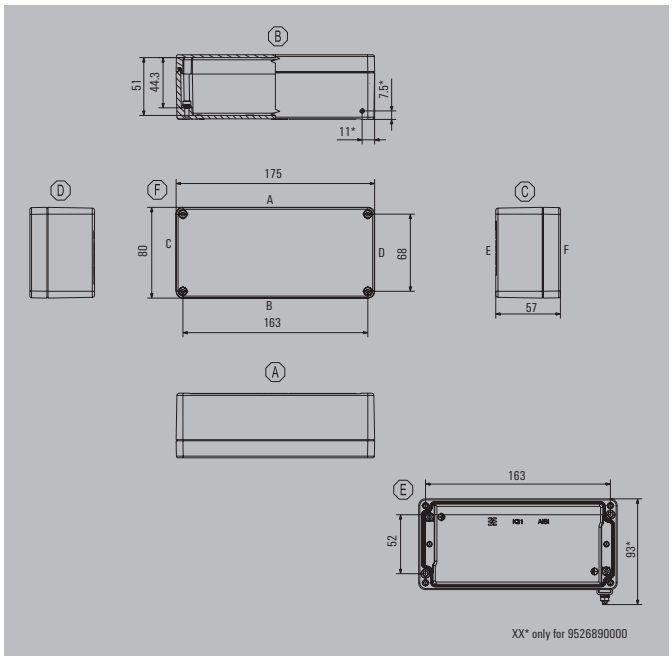

Height/Width/Depth	80 / 175 / 57 mm

Ordering data

powder-coated (RAL 7001)	Order No.
Standard (CR seal)	9529170000
Standard (silicone seal)**	1937820000
unpainted	
Standard (CR seal)	0573500000
Ex enclosure (silicone seal)	9526890000

Note The colours of painted enclosures may vary under certain circumstances. **Delivery time available on request.

Accessories

Terminal rail, Set	Order No.
35 mm width	1910040000
Mounting plate	
Steel sheet, zinc plated	3073040000
Hinge, diecast zinc, Set	
	1580360000
Torx® screwdriver	
Uninsulated Torx® TH20	9009160000

Note The accessory sets contain the necessary mounting material. Necessary on use of 1 hinge per longitudinal side.

Max. number of terminals (industry)

Assembly with terminal	vertical	horizontal
2.5 mm²	*	1x23
4 mm²	*	1x19
6 mm²		
10 mm²		
16 mm²		

Note *Please refer to the Terminal Block Catalogue or the SAK Range for more information about populating the enclosures with terminal blocks. We recommend BK 6 or BK 6 CRN (0625220000) for vertical installations. There are no pre-defined mounting points set within this enclosure for installing internal equipment in a vertical position.

Number of cable entries

Number of cable entries	A / B	C / D
M12	9	2
M16	6	2
M20	4	1
M25	3	
M32		
M40		
M50		
M63		

Note **Our IP 68 brass cable glands are used as the reference for these guideline values.

Dimensions of mounting plate

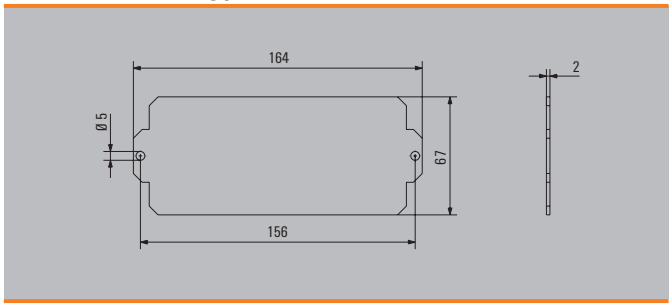

Klippon® K 32

Depth 55 mm

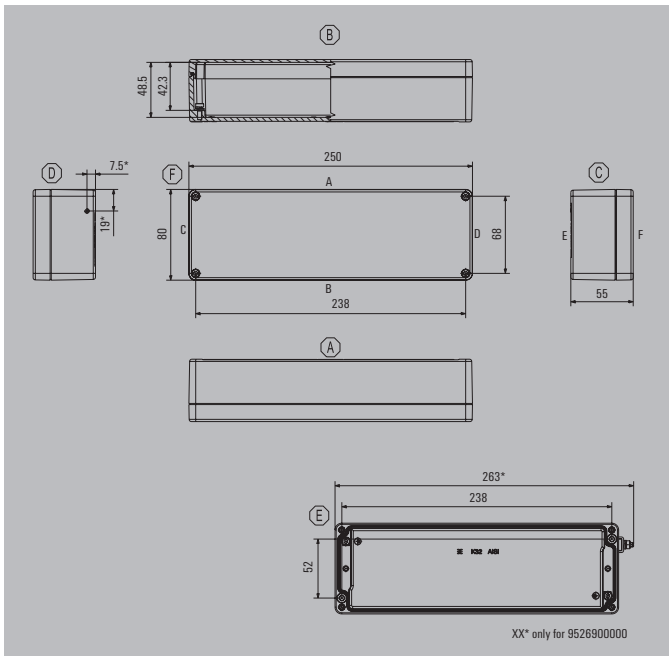

Height/Width/Depth	80 / 250 / 55 mm

Ordering data

powder-coated (RAL 7001)	Order No.
Standard (CR seal)	9529180000
Standard (silicone seal)**	1937810000
unpainted	
Standard (CR seal)	1565260000
Ex enclosure (silicone seal)	9526900000

Note The colours of painted enclosures may vary under certain circumstances. **Delivery time available on request.

Accessories

Terminal rail, Set	Order No.
35 mm width	1910050000
Mounting plate	
Steel sheet, zinc plated	3073050000
Torx® screwdriver	
Uninsulated Torx® TH20	9009160000

Note The accessory sets contain the necessary mounting material.

Max. number of terminals (industry)

Assembly with terminal	vertical	horizontal
2.5 mm²	*	1x38
4 mm²	*	1x32
6 mm²		
10 mm²		
16 mm²		

Note *Please refer to the Terminal Block Catalogue or the SAK Range for more information about populating the enclosures with terminal blocks. We recommend BK 6 or BK 6 CRN (0625220000) for vertical installations. There are no pre-defined mounting points set within this enclosure for installing internal equipment in a vertical position.

Number of cable entries

Number of cable entries	A / B	C / D
M12	15	2
M16	9	2
M20	7	1
M25	6	
M32		
M40		
M50		
M63		

Note **Our IP 68 brass cable glands are used as the reference for these guideline values.

Dimensions of mounting plate

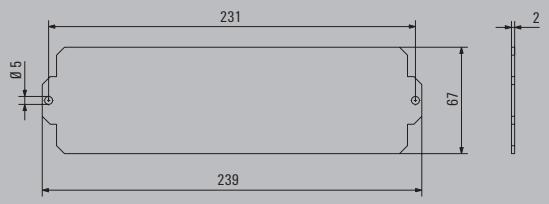

Klippon® K 4

Depth 72 mm

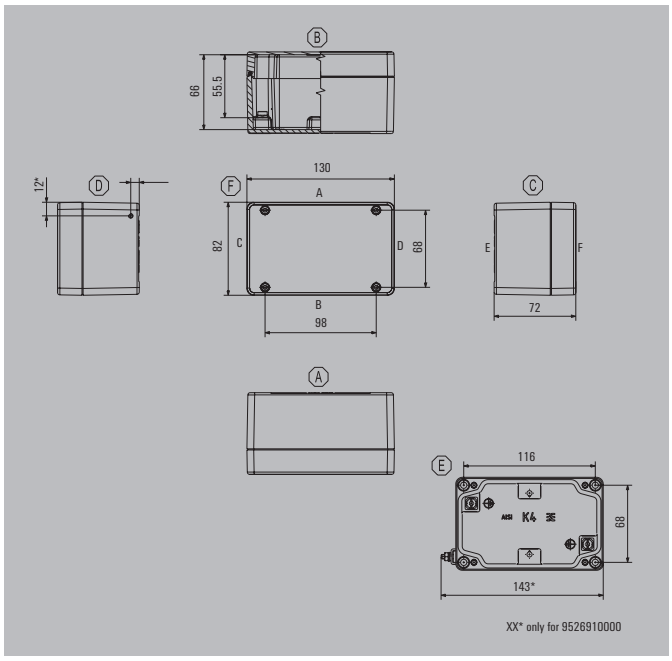

Height/Width/Depth	82 / 130 / 72 mm

Ordering data

powder-coated (RAL 7001)	Order No.
Standard (CR seal)	9529190000
Standard (silicone seal)**	1937890000
unpainted	
Standard (CR seal)	0342300000
Ex enclosure (silicone seal)	9526910000

Note The colours of painted enclosures may vary under certain circumstances. **Delivery time available on request.

Accessories

Terminal rail, Set	Order No.
35 mm width	1910060000
Mounting plate	
Steel sheet, zinc plated	3073060000
Hinge, diecast zinc, Set	
	1580360000
Torx® screwdriver	
Uninsulated Torx® TH20	9009160000

Note Sets also contain the mounting material, if required. 1 hinge per longitudinal side

Max. number of terminals (industry)

Assembly with terminal	vertical	horizontal
2.5 mm²	1x5	*
4 mm²	1x4	*
6 mm²	1x3	
10 mm²	1x2	
16 mm²		

Note The mounting rails are designed to be installed directly.
Assembly with terminals provides for 10 mm clearance to the ends of the mounting rail.
Ordering recommendations:
TS 35 mounting rail (screw-type terminals) WDU 2.5 1020000000 / (tension clamp terminals) ZDU 2.5 1608510000
*For fitting the enclosures with terminal blocks, please refer to the Terminal block catalogue or the SAK range. We recommend BK 6 or BK 6 CRN (0625220000) for horizontal installations.
There are no pre-defined mounting points set within this enclosure for installing internal equipment in a horizontal position.

Number of cable entries

Number of cable entries	A / B	C / D
M12	5	2
M16	3	2
M20	2	1
M25	2	1
M32		1
M40		
M50		
M63		

Note **Our IP 68 brass cable glands are used as the reference for these guideline values.

Dimensions of mounting plate

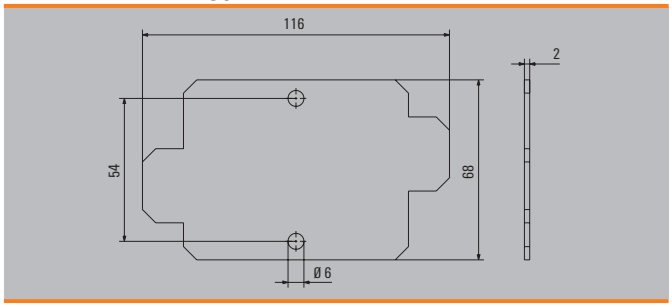

Klippon® K 41

Depth 81 mm

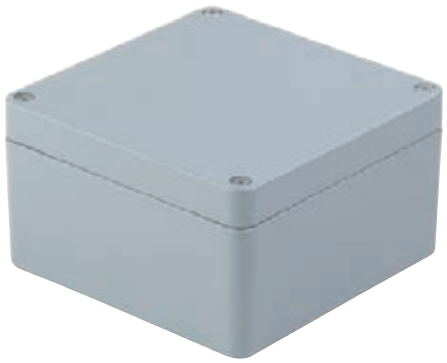

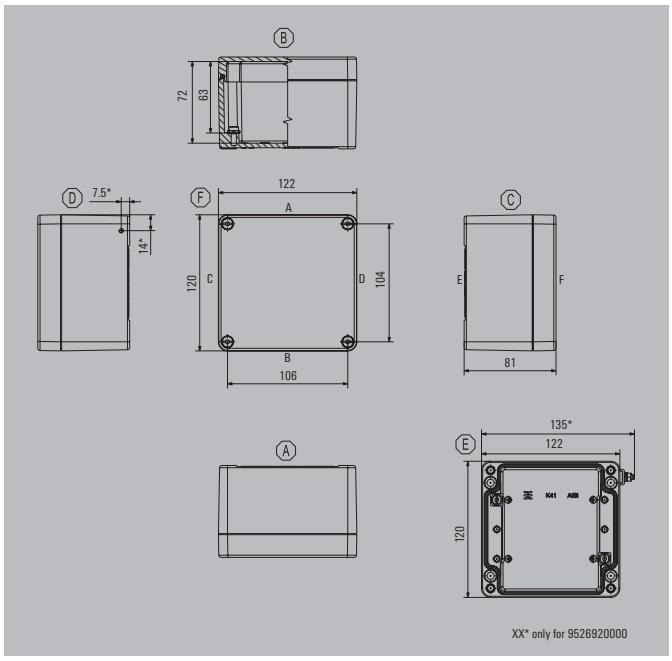

Height/Width/Depth	120 / 122 / 81 mm

Ordering data

powder-coated (RAL 7001)	Order No.
Standard (CR seal)	9529200000
Standard (silicone seal)**	1937800000
unpainted	
Standard (CR seal)	1565270000
Ex enclosure (silicone seal)	9526920000

Note The colours of painted enclosures may vary under certain circumstances. **Delivery time available on request.

Accessories

Terminal rail, Set	Order No.
35 mm width	1910070000
Earth bar, Set	
Mounting plate	
Steel sheet, zinc plated	3073070000
Hinge, diecast zinc, Set	
	1580360000
External mounting feet, set of 4	
	9527590000
Torx® screwdriver	
Uninsulated Torx® TH20	9009160000

Note The accessory sets contain the necessary mounting material. Necessary on use of 1 hinge per longitudinal side.

Max. number of terminals (industry)

Assembly with terminal	vertical	horizontal
2.5 mm²	*	1x13
4 mm²	*	1x11
6 mm²		1x8
10 mm²		1x6
16 mm²		

Note *Please refer to the Terminal Block Catalogue or the SAK Range for more information about populating the enclosures with terminal blocks. We recommend BK 6 or BK 6 CRN (0625220000) for vertical installations. There are no specified mounting options available for mounting the enclosure in a vertical position. There are no pre-defined mounting points set within this enclosure for installing internal equipment in a vertical position.

Number of cable entries

Number of cable entries	A / B	C / D
M12	6	4
M16	6	4
M20	3	2
M25	2	1
M32	1	1
M40		
M50		
M63		

Note **Our IP 68 brass cable glands are used as the reference for these guideline values.

Dimensions of mounting plate

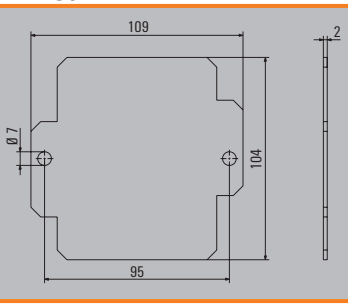

Klippon® K 5

Depth 90 mm

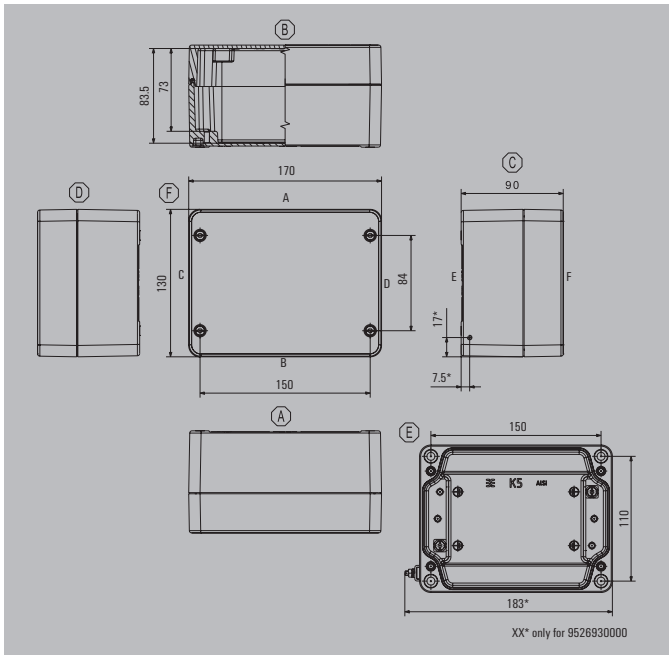

Height/Width/Depth	130 / 170 / 90 mm

Ordering data

powder-coated (RAL 7001)	Order No.
Standard (CR seal)	9529210000
Standard (silicone seal)**	1937860000
unpainted	
Standard (CR seal)	0342400000
Ex enclosure (silicone seal)	9526930000

Note The colours of painted enclosures may vary under certain circumstances. **Delivery time available on request.

Accessories

Terminal rail, Set	Order No.
35 mm width	1910080000
Earth bar, Set	
	9511220000
Mounting plate	
Steel sheet, zinc plated	3073080000
Hinge, diecast zinc, Set	
	1580360000
External mounting feet, set of 4	
	9529080000
Torx® screwdriver	
Uninsulated Torx® TH20	9009160000

Note The accessory sets contain the necessary mounting material. Necessary on use of 1 hinge per longitudinal side.

Max. number of terminals (industry)

Assembly with terminal	vertical	horizontal
2.5 mm²	*	1x20
4 mm²	*	1x16
6 mm²		1x12
10 mm²		1x10
16 mm²		1x8

Note The mounting rails are designed to be installed directly.
Assembly with terminals provides for 10 mm clearance to the ends of the mounting rail.
Ordering recommendations:
TS 35 mounting rail (screw-type terminals) WDU 2.5 1020000000 / (tension clamp terminals) ZDU 2.5 1608510000
*For fitting the enclosures with terminal blocks, please refer to the Terminal block catalogue or the SAK range. We recommend BK 6 or BK 6 CRN (0625220000) for vertical installations. There are no specified mounting options available for mounting the enclosure in a vertical position. There are no pre-defined mounting points set within this enclosure for installing internal equipment in a vertical position.

Number of cable entries

Number of cable entries	A / B	C / D
M12	11	4
M16	8	2
M20	4	1
M25	3	1
M32	2	1
M40		
M50		
M63		

Note **Our IP 68 brass cable glands are used as the reference for these guideline values.

Dimensions of mounting plate

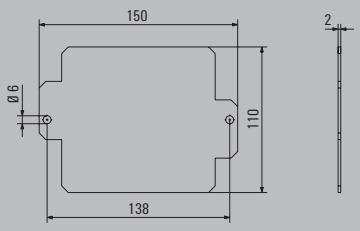

Klippon® K 51

Depth 81 mm

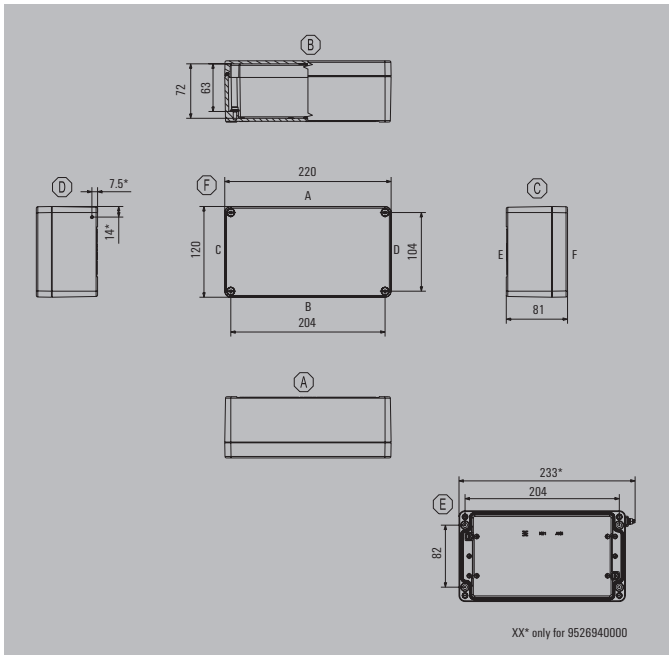

Height/Width/Depth	120 / 220 / 81 mm

Ordering data

powder-coated (RAL 7001)	Order No.
Standard (CR seal)	9529220000
Standard (silicone seal)**	1937750000
unpainted	
Standard (CR seal)	1565280000
Ex enclosure (silicone seal)	9526940000

Note The colours of painted enclosures may vary under certain circumstances. **Delivery time available on request.

Accessories

Terminal rail, Set	Order No.
35 mm width	1910090000
Earth bar, Set	
	9511210000
Mounting plate	
Steel sheet, zinc plated	3073090000
Hinge, diecast zinc, Set	
	1580360000
External mounting feet, set of 4	
	9527590000
Torx® screwdriver	
Uninsulated Torx® TH20	9009160000

Note The accessory sets contain the necessary mounting material. Necessary on use of 2 hinges per longitudinal side.

Max. number of terminals (industry)

Assembly with terminal	vertical	horizontal
2.5 mm²	*	1x31
4 mm²	*	1x26
6 mm²		1x19
10 mm²		1x15
16 mm²		

Note The mounting rails are designed to be installed directly.
Assembly with terminals provides for 10 mm clearance to the ends of the mounting rail.
Ordering recommendations:
TS 35 mounting rail (screw-type terminals) WDU 2.5 1020000000 / (tension clamp terminals) ZDU 2.5 1608510000
*For fitting the enclosures with terminal blocks, please refer to the Terminal block catalogue or the SAK range. We recommend BK 6 or BK 6 CRN (0625220000) for vertical installations. There are no pre-defined mounting points set within this enclosure for installing internal equipment in a vertical position.

Number of cable entries

Number of cable entries	A / B	C / D
M12	23	6
M16	14	3
M20	8	2
M25	5	1
M32	3	1
M40	3	
M50		
M63		

Note **Our IP 68 brass cable glands are used as the reference for these guideline values.

Dimensions of mounting plate

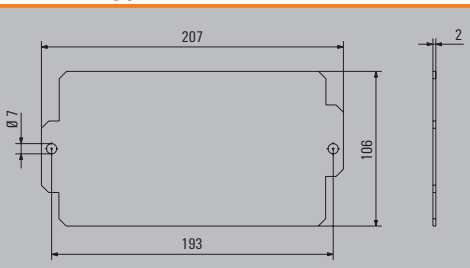

Klippon® K 52

Depth 91 mm

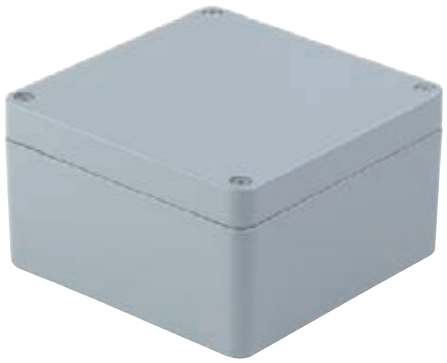

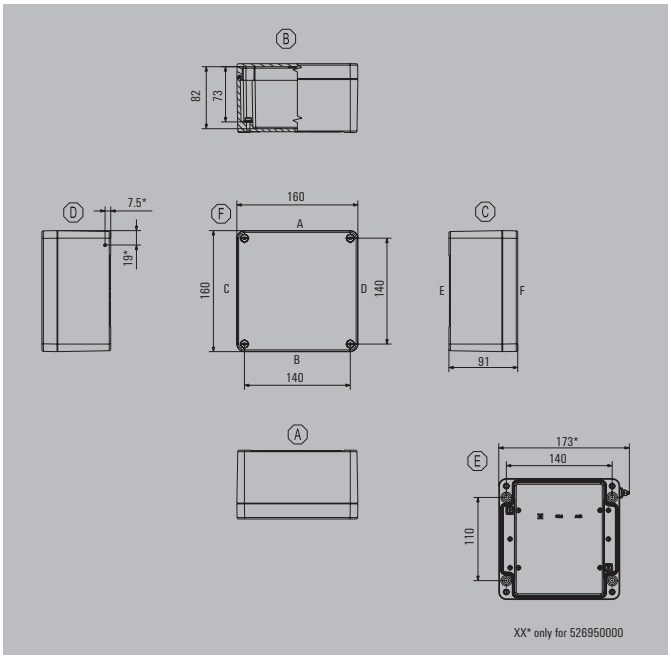

Height/Width/Depth	160 / 160 / 91 mm

Ordering data

powder-coated (RAL 7001)	Order No.
Standard (CR seal)	9529230000
Standard (silicone seal)**	1937740000
unpainted	
Standard (CR seal)	1565290000
Ex enclosure (silicone seal)	9526950000

Note The colours of painted enclosures may vary under certain circumstances. **Delivery time available on request.

Accessories

Terminal rail, Set	Order No.
35 mm width	1910100000
Earth bar, Set	
	9511220000
Mounting plate	
Steel sheet, zinc plated	3073100000
Hinge, diecast zinc, Set	
	1580360000
External mounting feet, set of 4	
	9527590000
Torx® screwdriver	
Uninsulated Torx® TH20	9009160000

Note The accessory sets contain the necessary mounting material. Necessary on use of 1 hinge per longitudinal side.

Max. number of terminals (industry)

Assembly with terminal	vertical	horizontal
2.5 mm²	*	1x18
4 mm²	*	1x15
6 mm²		1x11
10 mm²		1x9
16 mm²		

Note The mounting rails are designed to be installed directly.
Assembly with terminals provides for 10 mm clearance to the ends of the mounting rail.
Ordering recommendations:
TS 35 mounting rail (screw-type terminals) WDU 2.5 1020000000 / (tension clamp terminals) ZDU 2.5 1608510000
*For fitting the enclosures with terminal blocks, please refer to the Terminal block catalogue or the SAK range. We recommend BK 12 or BK 12 CRN (0625320000) for vertical installations.
There are no pre-defined mounting points set within this enclosure for installing internal equipment in a vertical position.

Number of cable entries

Number of cable entries	A / B	C / D
M12	14	8
M16	8	5
M20	5	3
M25	3	2
M32	2	1
M40	1	
M50		
M63		

Note **Our IP 68 brass cable glands are used as the reference for these guideline values.

Dimensions of mounting plate

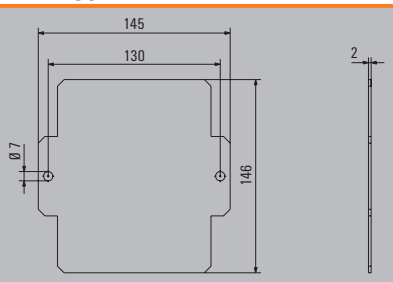

Klippon® K 6

Depth 100 mm

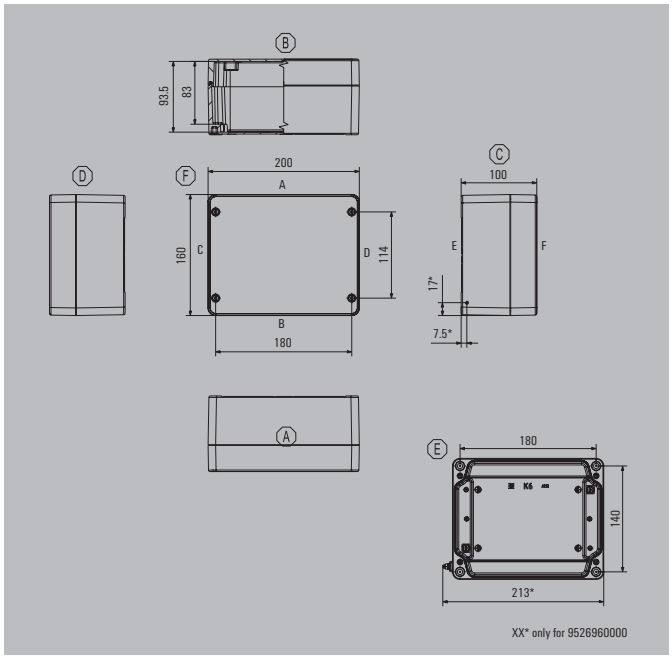

Height/Width/Depth	160 / 200 / 100 mm

Ordering data

powder-coated (RAL 7001)	Order No.
Standard (CR seal)	9529240000
Standard (silicone seal)**	1937870000
unpainted	
Standard (CR seal)	0342500000
Ex enclosure (silicone seal)	9526960000

Note The colours of painted enclosures may vary under certain circumstances. **Delivery time available on request.

Accessories

Terminal rail, Set	Order No.
35 mm width	1910110000
Earth bar, Set	
Mounting plate	
Steel sheet, zinc plated	3073110000
Hinge, diecast zinc, Set	
	1580360000
External mounting feet, set of 4	
	9529080000
Torx® screwdriver	
Uninsulated Torx® TH20	9009160000

Note The accessory sets contain the necessary mounting material. Necessary on use of 2 hinges per longitudinal side.

Max. number of terminals (industry)

Assembly with terminal	vertical	horizontal
2.5 mm²	*	1x25
4 mm²	*	1x21
6 mm²		1x15
10 mm²		1x12
16 mm²		1x10

Note The mounting rails are designed to be installed directly.
Assembly with terminals provides for 10 mm clearance to the ends of the mounting rail.
Ordering recommendations:
TS 35 mounting rail (screw-type terminals) WDU 2.5 1020000000 / (tension clamp terminals) ZDU 2.5 1608510000
*For fitting the enclosures with terminal blocks, please refer to the Terminal block catalogue or the SAK range. We recommend BK 12 or BK 12 CRN (0625320000) for vertical installations.
There are no pre-defined mounting points set within this enclosure for installing internal equipment in a vertical position.

Number of cable entries

Number of cable entries	A / B	C / D
M12	17	6
M16	12	6
M20	7	3
M25	4	2
M32	3	2
M40	2	1
M50		
M63		

Note **Our IP 68 brass cable glands are used as the reference for these guideline values.

Dimensions of mounting plate

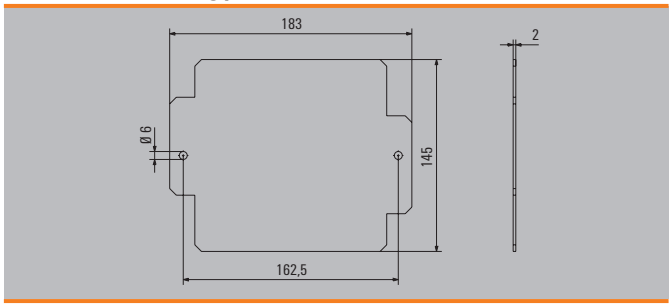

Klippon® K 61

Depth **91 mm**

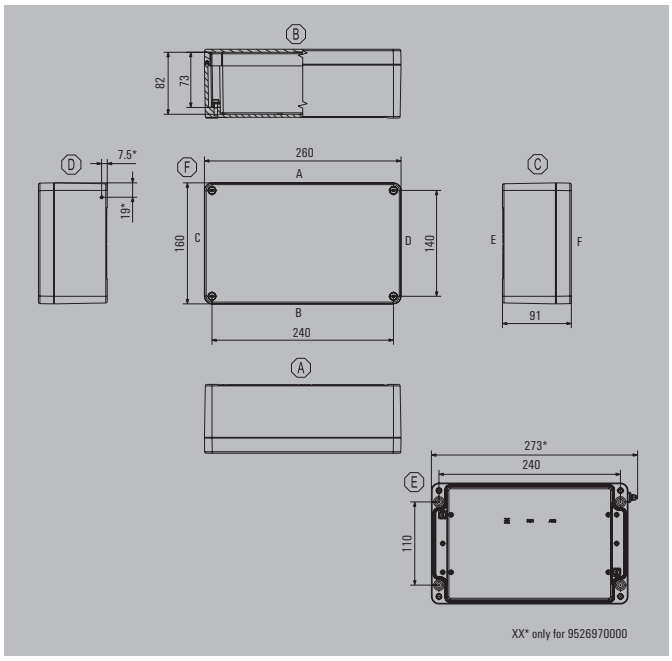

Height/Width/Depth	160 / 260 / 91 mm

Ordering data

powder-coated (RAL 7001)	Order No.
Standard (CR seal)	9529250000
Standard (silicone seal)**	1937730000
unpainted	
Standard (CR seal)	0573600000
Ex enclosure (silicone seal)	9526970000

Note The colours of painted enclosures may vary under certain circumstances. **Delivery time available on request.

Accessories

Terminal rail, Set	Order No.
35 mm width	1910120000
Earth bar, Set	
	9511230000
Mounting plate	
Steel sheet, zinc plated	3073120000
Hinge, diecast zinc, Set	
	1580360000
External mounting feet, set of 4	
	9527590000
Torx® screwdriver	
Uninsulated Torx® TH20	9009160000

Note The accessory sets contain the necessary mounting material. Necessary on use of 2 hinges per longitudinal side.

Max. number of terminals (industry)

Assembly with terminal	vertical	horizontal
2.5 mm²	*	1x38
4 mm²	*	1x32
6 mm²		1x24
10 mm²		1x19
16 mm²		1x16

Note The mounting rails are designed to be installed directly.
Assembly with terminals provides for 10 mm clearance to the ends of the mounting rail.
Ordering recommendations:
TS 35 mounting rail (screw-type terminals) WDU 2.5 1020000000 / (tension clamp terminals) ZDU 2.5 1608510000
*For fitting the enclosures with terminal blocks, please refer to the Terminal block catalogue or the SAK range. We recommend BK 12 or BK 12 CRN (0625320000) for vertical installations.
There are no pre-defined mounting points set within this enclosure for installing internal equipment in a vertical position.

Number of cable entries

Number of cable entries	A / B	C / D
M12	27	8
M16	23	6
M20	13	3
M25	8	2
M32	4	1
M40	3	1
M50		
M63		

Note **Our IP 68 brass cable glands are used as the reference for these guideline values.

Dimensions of mounting plate

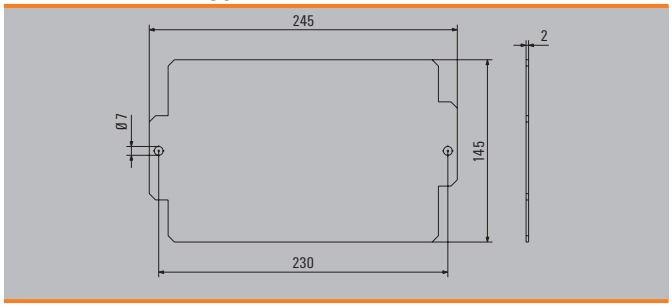

Klippon® K 7

Depth 100 mm

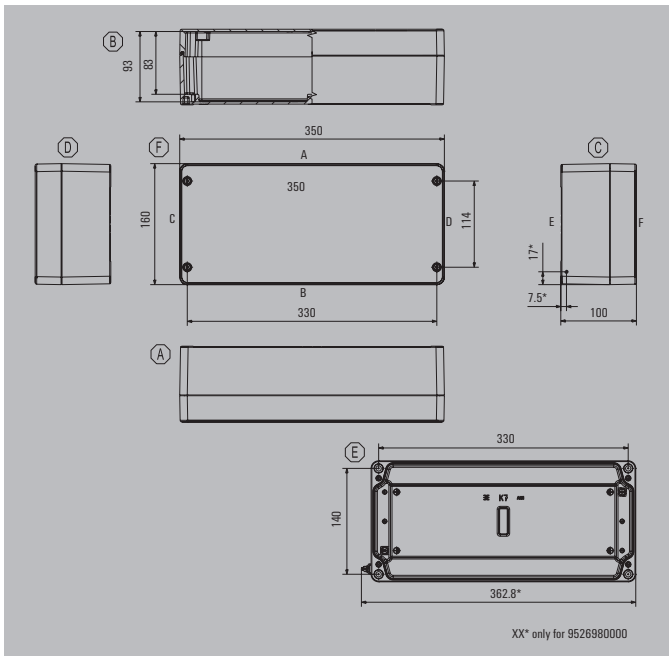

Height/Width/Depth	160 / 350 / 100 mm

Ordering data

powder-coated (RAL 7001)	Order No.
Standard (CR seal)	9529260000
Standard (silicone seal)**	1937880000
unpainted	
Standard (CR seal)	0342600000
Ex enclosure (silicone seal)	9526980000

Note The colours of painted enclosures may vary under certain circumstances. **Delivery time available on request.

Accessories

Terminal rail, Set	Order No.
35 mm width	1910130000
Earth bar, Set	
Mounting plate	
Steel sheet, zinc plated	3073130000
Hinge, diecast zinc, Set	
	1580360000
External mounting feet, set of 4	
	9529080000
Torx® screwdriver	
Uninsulated Torx® TH20	9009160000

Note The accessory sets contain the necessary mounting material. Necessary on use of 2 hinges per longitudinal side.

Max. number of terminals (industry)

Assembly with terminal	vertical	horizontal
2.5 mm²	*	1x55
4 mm²	*	1x46
6 mm²		1x34
10 mm²		1x27
16 mm²		1x23

Note The mounting rails are designed to be installed directly.
Assembly with terminals provides for 10 mm clearance to the ends of the mounting rail.
Ordering recommendations:
TS 35 mounting rail (screw-type terminals) WDU 2.5 1020000000 / (tension clamp terminals) ZDU 2.5 1608510000
*For fitting the enclosures with terminal blocks, please refer to the Terminal block catalogue or the SAK range. We recommend BK 12 or BK 12 CRN (0625320000) for vertical installations.
There are no pre-defined mounting points set within this enclosure for installing internal equipment in a vertical position.

Number of cable entries

Number of cable entries	A / B	C / D
M12	42	8
M16	26	6
M20	17	3
M25	10	2
M32	6	2
M40	5	1
M50		
M63		

Note **Our IP 68 brass cable glands are used as the reference for these guideline values.

Dimensions of mounting plate

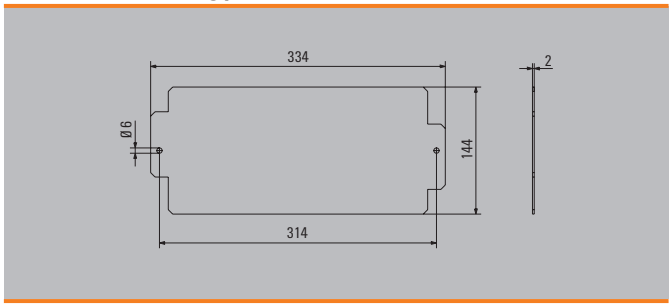

Klippon® K 71

Depth 111 mm

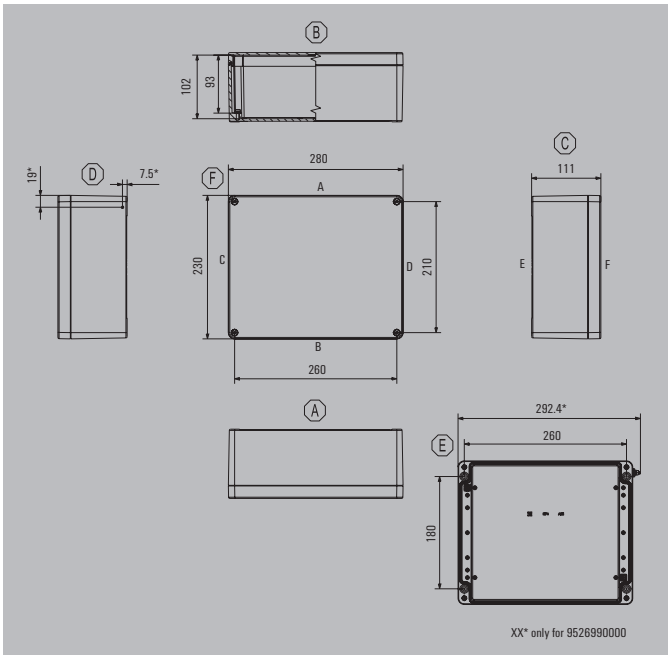

Height/Width/Depth	230 / 280 / 111 mm

Ordering data

powder-coated (RAL 7001)	Order No.
Standard (CR seal)	9529270000
Standard (silicone seal)**	1937720000
unpainted	
Standard (CR seal)	0573700000
Ex enclosure (silicone seal)	9526990000

Note The colours of painted enclosures may vary under certain circumstances. **Delivery time available on request.

Accessories

Terminal rail, Set	Order No.
35 mm width	1910140000
Earth bar, Set	
	9511190000
Mounting plate	
Steel sheet, zinc plated	3073140000
Hinge, diecast zinc, Set	
	1580360000
External mounting feet, set of 4	
	9527590000
Torx® screwdriver	
Uninsulated Torx® TH20	9009160000

Note The accessory sets contain the necessary mounting material. Necessary on use of 2 hinges per longitudinal side.

Max. number of terminals (industry)

Assembly with terminal	vertical	horizontal
2.5 mm²	*	2x42
4 mm²	*	2x35
6 mm²		2x26
10 mm²		2x21
16 mm²		

Note The mounting rails are designed to be installed directly.
Assembly with terminals provides for 10 mm clearance to the ends of the mounting rail.
Ordering recommendations:
TS 35 mounting rail (screw-type terminals) WDU 2.5 1020000000 / (tension clamp terminals) ZDU 2.5 1608510000
*For fitting the enclosures with terminal blocks, please refer to the Terminal block catalogue or the SAK range. We recommend BK 12 or BK 12 CRN (0625320000) for vertical installations.
There are no pre-defined mounting points set within this enclosure for installing internal equipment in a vertical position.

Number of cable entries

Number of cable entries	A / B	C / D
M12	42	28
M16	30	18
M20	21	10
M25	12	8
M32	10	3
M40	4	2
M50	3	2
M63		

Note **Our IP 68 brass cable glands are used as the reference for these guideline values.

Dimensions of mounting plate

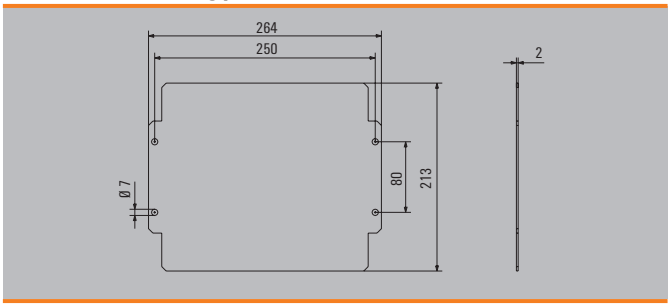

Standardised distribution boxes – Product overview: Aluminium enclosure

Use the product overview to find the right solution for you! Combine your own industrial version consisting of an enclosure, with or without threaded holes, a suitable mounting rail or pre-fitted terminal strips. The compatible components are always shown in a row.

Distribution boxes with Ex protection for use in explosive areas can be found in the last column. They come with threaded holes and are already equipped with a terminal strip.

Aluminium enclosure, uncoated

Empty enclosure without threaded holes

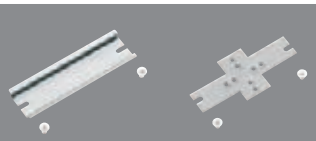

Mounting rail (TS)
Mounting plate (MOPL)

Dimensions of the enclosure height x width x depth mm	Enclosure type	Order No.	Qty.	Type	Length mm	Rail mounting slot dimensions mm	Order No.	Qty.
Aluminium, uncoated								
64 x 58 x 34	Klippon® K01	**1565240000**	10	-	-	-	**–**	-
70 x 70 x 45	Klippon® K1	**0342000000**	10	TS15	60	4.5 x 20	**1909980000**	1
				MOPL	59	4.2 x 14	**8000004495**	1
80 x 75 x 57	Klippon® K11	**0573300000**	10	TS15	64	4.5 x 20	**1909990000**	1
70 x 100 x 45	Klippon® K2	**0342100000**	10	TS15	90	4.5 x 20	**1910010000**	1
				MOPL	89	4.2 x 14	**8000004496**	1
80 x 125 x 57	Klippon® K21	**0573400000**	5	TS15	114	4.5 x 20	**1910020000**	1
70 x 165 x 45	Klippon® K3	**0342200000**	5	TS15	155	4.5 x 20	**1910030000**	1
				MOPL	154	4.2 x 14	**8000004497**	1
80 x 175 x 57	Klippon® K31	**0573500000**	5	TS15	164	4.5 x 20	**1910040000**	1
82 x 130 x 72	Klippon® K4	**0342300000**	1	TS35	64	5.5 x 20	**1910060000**	1
120 x 122 x 81	Klippon® K41	**1565270000**	1	TS35	105	6.3 x 20	**1910070000**	1
130 x 170 x 90	Klippon® K5	**0342400000**	1	TS35	148	5.5 x 20	**1910080000**	1
160 x 160 x 91	Klippon® K52	**1565290000**	1	TS35	140	6.3 x 20	**1910100000**	1
		protection class IP 66		suitable for the enclosures of the respective line				

[1] Multi-pole terminal strip (terminal block BK 4, BK 6 or BK 12), mounted on mounting plate
[2] Space for further threaded holes up to M40

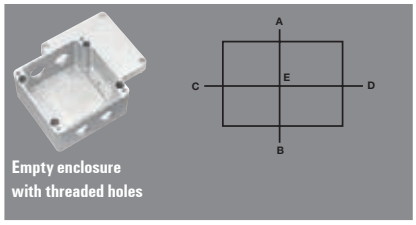

Empty enclosure with threaded holes

Terminal strip

Ex protected distribution box

Threaded hole Side A	Threaded hole Side B	Order No.	Qty.	Connection technology	Cross-section mm²	Number of DU*	Number of PE*	Order No.	Qty.	Order No.
1x M16	1x M16	8000004184	1	Screw connection	4	4	0	7906080000	100	–
1x M16	2x M16	8000004147	1	Screw connection	4	4	0	8000004129[1]	1	8000004202
1x M20	1x M20	8000004148	1							8000004203
2x M16	2x M16	8000004149	1	Screw connection	4	5	2	8000004131	1	8000004207
2x M20	2x M20	8000004150	1	Tension clamp connection	2.5	5	1	8000004130	1	8000004208
2x M16	2x M16			Tension clamp connection	2.5	5	1			
2x M20	2x M20			Screw connection	4	5	2			8000004209
2x M20	2x M20	8000004151	1	Screw connection	4	6	0	8000004132[1]	1	8000004210
3x M16	3x M16	8000004152	1	Screw connection	4	13	2	8000004134	1	8000004212
3x M16	3x M16			Tension clamp connection	2.5	14	2	8000004133	1	8000004211
4x M20	4x M20	8000004153	1	Screw connection	4	12	0	8000004135[1]	1	
4x M20	4x M20	8000004154	1	Screw connection	4	21	2	8000004137	1	8000004215
4x M20	4x M20			Tension clamp connection	2.5	24	2	8000004136	1	8000004214
2x M20	2x M20	8000004155	1	Screw connection	4	5	2	8000004138	1	
2x M20	2x M20			Tension clamp connection	4	4	1	8000004139	1	8000004217
2x M25	2x M25	8000003446	1	Screw connection	4	12	2	8000003444	1	8000003589
3x M20	3x M20	8000003447	1	Tension clamp connection	4	9	2	8000003445	1	
2x M25	2x M25			Tension clamp connection	4	9	2			
3x M20	3x M20			Screw connection	4	12	2			8000003591
4x M20	4x M20	8000004158	1	Screw connection	4	17	2	8000004140	1	8000004218
4x M20	4x M20			Tension clamp connection	4	15	2	8000004141	1	
4x M20	4x M20	8000004159[2]	1	Screw connection	4	16	2	8000004142	1	8000004220
4x M20	4x M20			Tension clamp connection	2.5	19	2	8000004143	1	8000004221

suitable for the enclosure of the respective line
*DU = feed-through terminals, PE = PE terminals

Ex-enclosure with threaded holes and terminal strip according to the respective line

Klippon® K01

34 mm

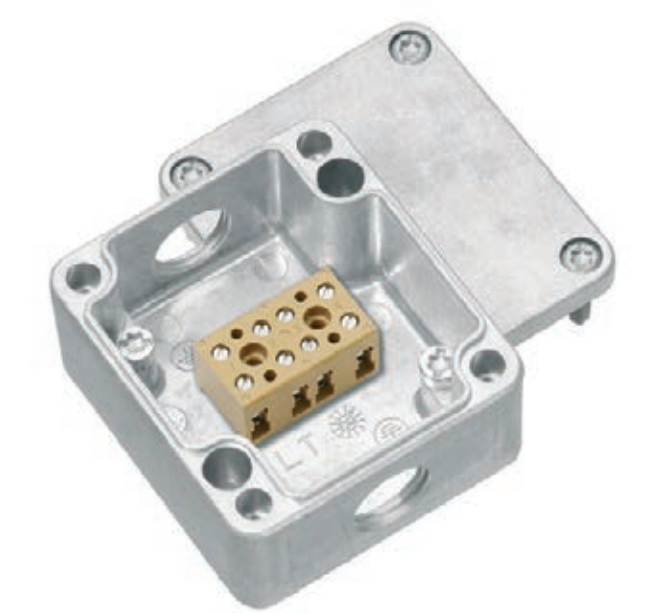

Height / Width / Depth	64 / 58 / 34 mm

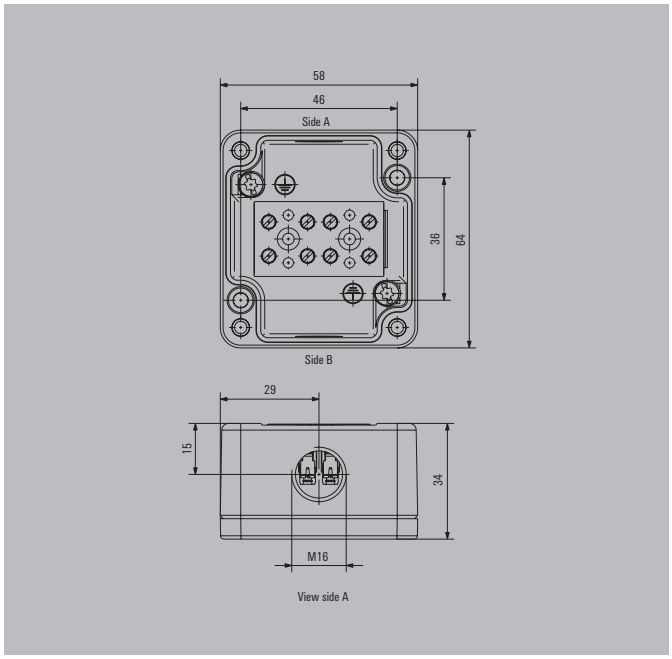

Accessories

Stopping plugs		Order No.
	KSPM M16 PL	1209890000
	VP M16-EXE MS	1737140000

Empty enclosure with tapped holes

	Drill holes side A	Drill holes side B	Order No.
	1 x M16x1.5	1 x M16x1.5	8000004184

Note All enclosures are natural finish (unpainted).

Note You can find markers and labels in the Terminal Block Catalogue. Wall-mounting options can be found in Chapter B under Klippon® K

Terminal block, suitable for empty enclosure

	Type of connection	Type	Conductor can be clamped	Rated cross-section	No. of DU*	No. of PE*	Order No.
	Screw connection	BK 4/E	Solid / stranded Flexible / flexible with wire-end ferrule	0.5...4 mm² / 1.5...4 mm² 0.5...4 mm² / 0.5...4 mm²			7906080000

Note *DU = feed-through terminals, PE = PE terminals

Klippon® K1

45 mm

Height / Width / Depth	70 / 70 / 45 mm

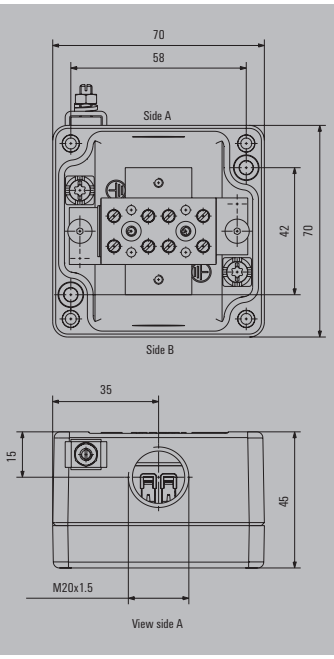

Accessories

Cable glands	Order No.
KSG M20 BN 0 NI 2 G20	1911560000

Stopping plugs	
KSPM M16 PL	1209890000
KSPM M20 PL	1209910000
VP M16-EXE MS	1737140000
VP M20-EXE MS	1737150000

Empty enclosure with tapped holes

Drill holes side A	Drill holes side B	Order No.
1 x M16x1.5	2 x M16x1.5	8000004147
1 x M20x1.5	1 x M20x1.5	8000004148

Note All enclosures are natural finish (unpainted).

Note You can find markers and labels in the Terminal Block Catalogue. Wall-mounting options can be found in Chapter B under Klippon® K

Terminal block, suitable for empty enclosure

Type	Type of connection	Conductor can be clamped	Rated cross-section	No. of DU*	No. of PE*	Order No.
BK 4/E	Screw connection	Solid / stranded	0.5...4 mm² / 1.5...4 mm²	4	0	8000004129
		Flexible / flexible with wire-end ferrule	0.5...4 mm² / 0.5...4 mm²			

Note Supplied with mounting screws.
*DU = feed-through terminals, PE = PE terminals

Distribution box with ATEX II 2GD T85°C Ex e II T6

Drill holes side A	Drill holes side B	No. of DU*	No. of PE*	Order No.
1 x M16x1.5	2 x M16x1.5	4	0	8000004202
1 x M20x1.5	1 x M20x1.5	4	0	8000004203

Note All enclosures are equipped with an external earth stud connection.
*DU = feed-through terminals, PE = PE terminals

Terminal rail / mounting plate set

Product type	Type	Length	Order No.
Mounting plate	MOPL K1 BKVARIO SET	59 mm	8000004495
Mounting rail	TS15 60 KLippon K1 CSS	60 mm	1909980000

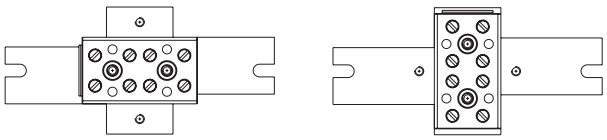

Note Supplied with mounting screws for the mounting rail or mounting plate

Klippon® K11

57 mm

Height / Width / Depth	80 / 75 / 57 mm

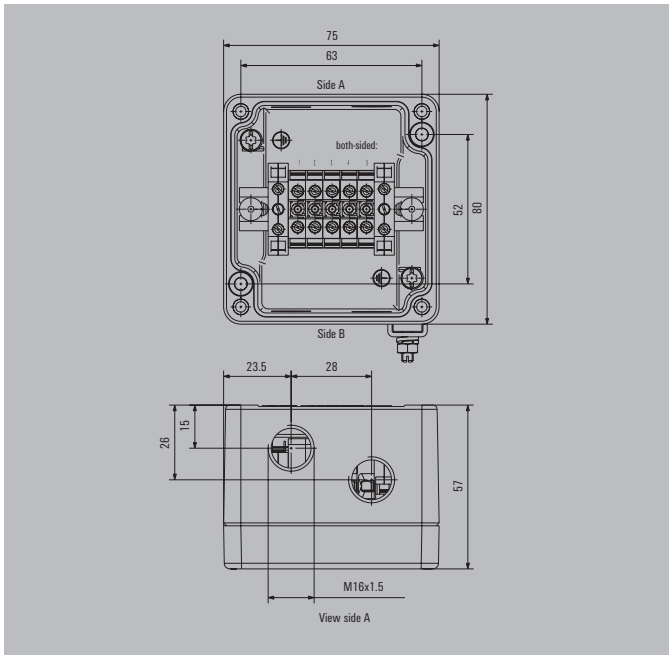

Accessories

Cable glands	Order No.
KSG M20 BN 0 NI 2 G20	1911560000
Stopping plugs	
KSPM M16 PL	1209890000
KSPM M20 PL	1209910000
VP M16-EXE MS	1737140000
VP M20-EXE MS	1737150000
Adapters	
ADAP EX M20-M16	1737560000

Empty enclosure with tapped holes

Drill holes side A	Drill holes side B	Order No.
2 x M16x1.5	2 x M16x1.5	8000004149
2 x M20x1.5	2 x M20x1.5	8000004150

Note All enclosures are natural finish (unpainted).

Note You can find markers and labels in the Terminal Block Catalogue. Wall-mounting options can be found in Chapter B under Klippon® K

Terminal block, suitable for empty enclosure

Type	Type of connection	Conductor can be clamped	Rated cross-section	No. of DU*	No. of PE*	Order No.
AKZ 4	Screw connection	Solid / stranded Flexible / flexible with wire-end ferrule	0.5...6 mm² / 1.5...4 mm² 0.5...4 mm² / 0.5...2.5 mm²	5	2	8000004131
ZDUA 2.5-2	Tension clamp connection	Solid / stranded Flexible / flexible with wire-end ferrule	0.5...4 mm² / ... 0.5...2.5 mm² / 0.5...1.5 mm²	5	1	8000004130

Note Markers numbered 1-50 (horizontal text) and mounting screws are included in the delivery.
*DU = feed-through terminals, PE = PE terminals

Distribution box with ATEX II 2GD T85°C Ex e II T6

Drill holes side A	Drill holes side B	No. of DU*	No. of PE*	Order No.
2 x M16x1.5	2 x M16x1.5	5	2	8000004207
2 x M16x1.5	2 x M16x1.5	5	1	8000004204
2 x M20x1.5	2 x M20x1.5	5	2	8000004209
2 x M20x1.5	2 x M20x1.5	5	1	8000004208

Note All enclosures are equipped with an external earth stud connection.
*DU = feed-through terminals, PE = PE terminals

Terminal rail / mounting plate set

Product type	Type	Length	Order No.
Mounting rail	TS15 64 Klippon K11	64 mm	1909990000

Note Supplied with mounting screws for the mounting rail or mounting plate

Klippon® K2

45 mm

Height / Width / Depth	70 / 100 / 45 mm

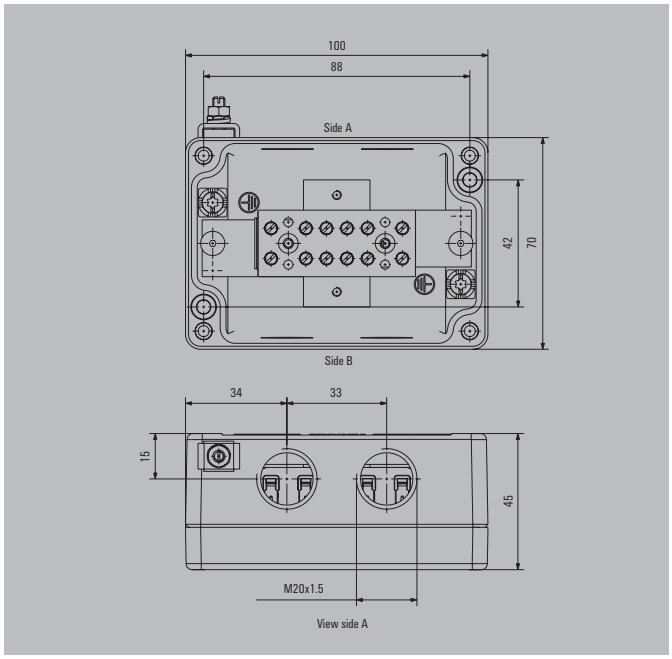

Accessories

Cable glands	Order No.
KSG M20 BN 0 NI 2 G20	1911560000
Stopping plugs	
KSPM M20 PL	1209910000
VP M20-EXE MS	1737150000
Adapters	
ADAP EX M20-M16	1737560000

Empty enclosure with tapped holes

Drill holes side A	Drill holes side B	Order No.
2 x M20x1.5	2 x M20x1.5	8000004151

Note All enclosures are natural finish (unpainted).

Note You can find markers and labels in the Terminal Block Catalogue. Wall-mounting options can be found in Chapter B under Klippon® K

Terminal block, suitable for empty enclosure

Type	Type of connection	Conductor can be clamped	Rated cross-section	No. of DU*	No. of PE*	Order No.
BK 6/E	Screw connection	Solid / stranded	0.5...4 mm² / 1.5...4 mm²	6	0	8000004132
		Flexible / flexible with wire-end ferrule	0.5...4 mm² / 0.5...4 mm²			

Note Supplied with mounting screws.
*DU = feed-through terminals, PE = PE terminals

Distribution box with ATEX II 2GD T85°C Ex e II T6

Drill holes side A	Drill holes side B	No. of DU*	No. of PE*	Order No.
2 x M20x1.5	2 x M20x1.5	6	0	8000004210

Note All enclosures are equipped with an external earth stud connection.
*DU = feed-through terminals, PE = PE terminals

Terminal rail / mounting plate set

Product type	Type	Length	Order No.
Mounting plate	MOPL K2 BKVARIO SET	89 mm	8000004496
Mounting rail	TS15 90 KLippon K2 CSS	90 mm	1910010000

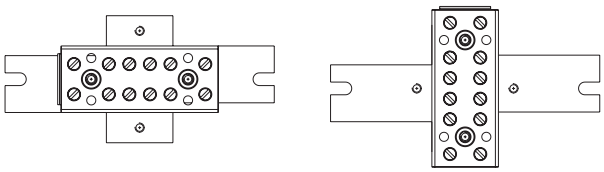

Note Supplied with mounting screws for the mounting rail or mounting plate

Klippon® K21

57 mm

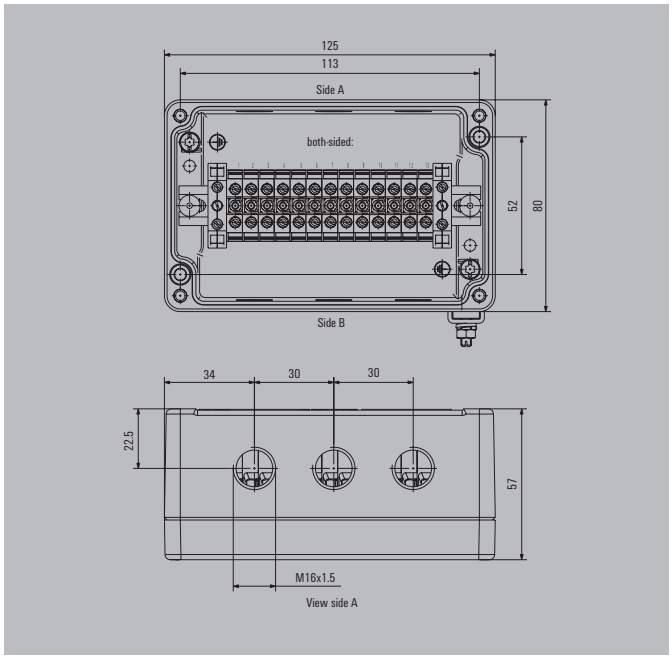

Height / Width / Depth	80 / 125 / 57 mm

Accessories

Stopping plugs		Order No.
	KSPM M16 PL	1209890000
	VP M16-EXE MS	1737140000

Empty enclosure with tapped holes

	Drill holes side A	Drill holes side B	Order No.
	3 x M16x1.5	3 x M16x1.5	8000004152

Note All enclosures are natural finish (unpainted).

Note You can find markers and labels in the Terminal Block Catalogue. Wall-mounting options can be found in Chapter B under Klippon® K

Terminal block, suitable for empty enclosure

	Type	Type of connection	Conductor can be clamped	Rated cross-section	No. of DU*	No. of PE*	Order No.
	AKZ 4	Screw connection	Solid / stranded Flexible / flexible with wire-end ferrule	0.5...6 mm² / 1.5...4 mm² 0.5...4 mm² / 0.5...2.5 mm²	13	2	8000004134
	ZDUA 2.5-2	Tension clamp connection	Solid / stranded Flexible / flexible with wire-end ferrule	0.5...4 mm² / ... 0.5...2.5 mm² / 0.5...1.5 mm²	14	2	8000004133

Note Markers numbered 1-50 (horizontal text) and mounting screws are included in the delivery.
*DU = feed-through terminals, PE = PE terminals

Distribution box with ATEX II 2GD T85°C Ex e II T6

Drill holes side A	Drill holes side B	No. of DU*	No. of PE*	Order No.
3 x M16x1.5	3 x M16x1.5	13	2	8000004212
3 x M16x1.5	3 x M16x1.5	14	2	8000004211

Note All enclosures are equipped with an external earth stud connection.
*DU = feed-through terminals, PE = PE terminals

Terminal rail / mounting plate set

	Product type	Type	Length	Order No.
	Mounting rail	TS15 114 Klippon K21 CSS	114 mm	1910020000

Note Supplied with mounting screws for the mounting rail or mounting plate

Klippon® K3

45 mm

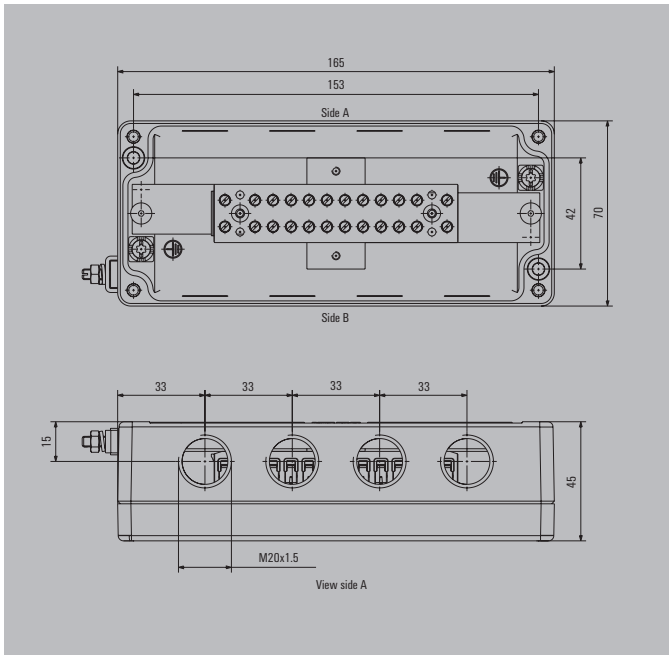

Height / Width / Depth	70 / 165 / 45 mm

Accessories

Cable glands		Order No.
	KSG M20 BN 0 NI 2 G20	1911560000
Stopping plugs		
	KSPM M20 PL	1209910000
	VP M20-EXE MS	1737150000
Adapters		
	ADAP EX M20-M16	1737560000

Empty enclosure with tapped holes

	Drill holes side A	Drill holes side B	Order No.
	4 x M20x1.5	4 x M20x1.5	8000004153

Note All enclosures are natural finish (unpainted).

Note You can find markers and labels in the Terminal Block Catalogue. Wall-mounting options can be found in Chapter B under Klippon® K

Terminal block, suitable for empty enclosure

	Type	Type of connection	Conductor can be clamped	Rated cross-section	No. of DU*	No. of PE*	Order No.
	BK 12/E	Screw connection	Solid / stranded	0.5...4 mm² / 1.5...4 mm²	12	0	8000004135
			Flexible / flexible with wire-end ferrule	0.5...4 mm² / 0.5...4 mm²			

Note Supplied with mounting screws.
*DU = feed-through terminals, PE = PE terminals

Distribution box with ATEX II 2GD T85°C Ex e II T6

Drill holes side A	Drill holes side B	No. of DU*	No. of PE*	Order No.
4 x M20x1.5	4 x M20x1.5	12	0	8000004213

Note All enclosures are equipped with an external earth stud connection.
*DU = feed-through terminals, PE = PE terminals

Terminal rail / mounting plate set

	Product type	Type	Length	Order No.
	Mounting plate	MOPL K3 BKVARIO SET	154 mm	8000004497
	Mounting rail	TS15 155 Klippon K3 CSS	155 mm	1910030000

Note Supplied with mounting screws for the mounting rail or mounting plate

Klippon® K31

57 mm

Height / Width / Depth	80 / 175 / 57 mm

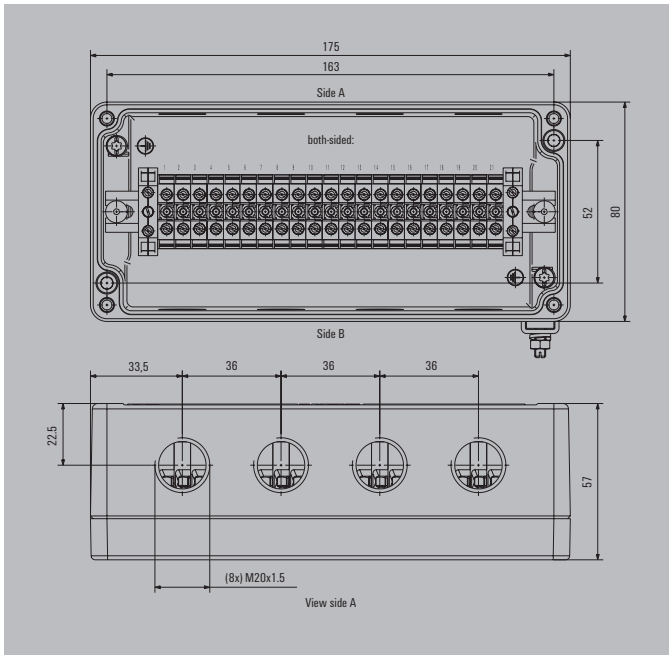

Accessories

Cable glands		Order No.
	KSG M20 BN 0 NI 2 G20	1911560000
Stopping plugs		
	KSPM M20 PL	1209910000
	VP M20-EXE MS	1737150000
Adapters		
	ADAP EX M20-M16	1737560000

Empty enclosure with tapped holes

	Drill holes side A	Drill holes side B	Order No.
	4 x M20x1.5	4 x M20x1.5	8000004154

Note All enclosures are natural finish (unpainted).

Note You can find markers and labels in the Terminal Block Catalogue. Wall-mounting options can be found in Chapter B under Klippon® K

Terminal block, suitable for empty enclosure

	Type	Type of connection	Conductor can be clamped	Rated cross-section	No. of DU*	No. of PE*	Order No.
	AKZ 4	Screw connection	Solid / stranded Flexible / flexible with wire-end ferrule	0.5...6 mm² / 1.5...4 mm² 0.5...4 mm² / 0.5...2.5 mm²	21	2	8000004137
	ZDUA 2.5-2	Tension clamp connection	Solid / stranded Flexible / flexible with wire-end ferrule	0.5...4 mm² / ... 0.5...2.5 mm² / 0.5...1.5 mm²	24	2	8000004136

Note Markers numbered 1-50 (horizontal text) and mounting screws are included in the delivery.
*DU = feed-through terminals, PE = PE terminals

Distribution box with ATEX II 2GD T85°C Ex e II T6

Drill holes side A	Drill holes side B	No. of DU*	No. of PE*	Order No.
4 x M20x1.5	4 x M20x1.5	21	2	8000004215
4 x M20x1.5	4 x M20x1.5	24	2	8000004214

Note All enclosures are equipped with an external earth stud connection.
*DU = feed-through terminals, PE = PE terminals

Terminal rail / mounting plate set

	Product type	Type	Length	Order No.
	Mounting rail	TS15 164 Klippon K31 CSS	164 mm	1910040000

Note Supplied with mounting screws for the mounting rail or mounting plate

Klippon® K4

72 mm

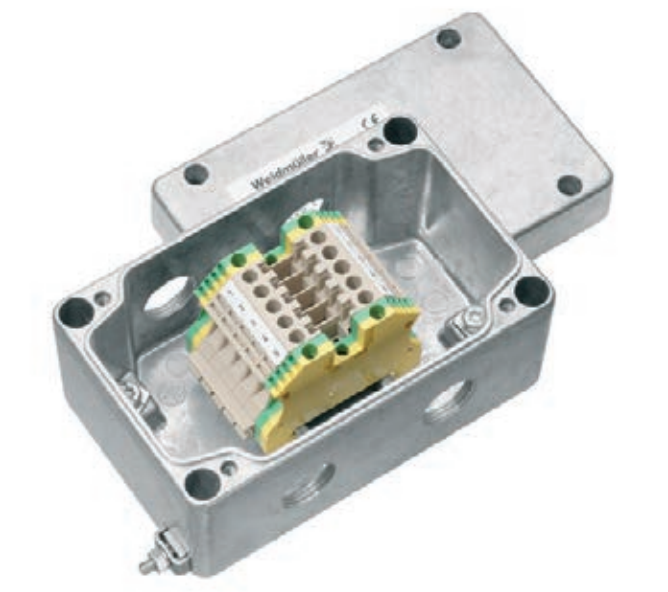

Height / Width / Depth	82 / 130 / 72 mm

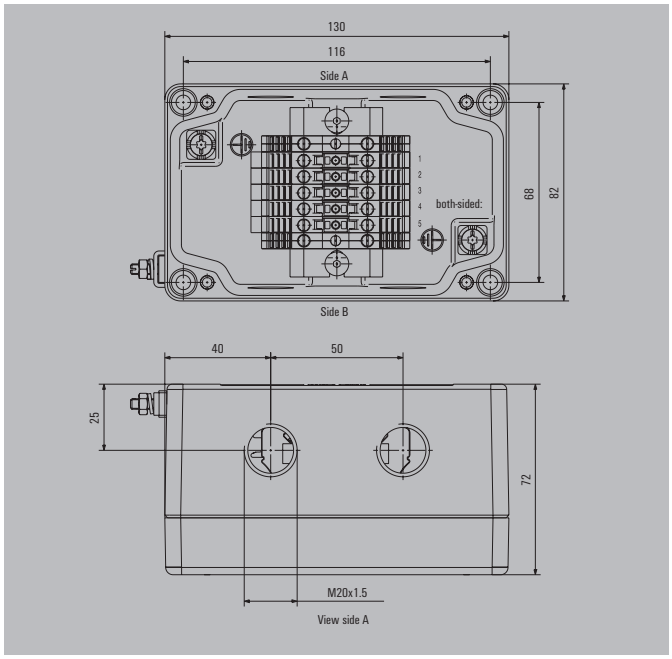

Accessories

Cable glands	Order No.
KSG M20 BN 0 NI 2 G20	1911560000

Stopping plugs	
KSPM M20 PL	1209910000
VP M20-EXE MS	1737150000

Adapters	
ADAP EX M20-M16	1737560000

Empty enclosure with tapped holes

Drill holes side A	Drill holes side B	Order No.
2 x M20x1.5	2 x M20x1.5	8000004155

Note All enclosures are natural finish (unpainted).

Note You can find markers and labels in the Terminal Block Catalogue. Wall-mounting options can be found in Chapter B under Klippon® K

Terminal block, suitable for empty enclosure

Type	Type of connection	Conductor can be clamped	Rated cross-section	No. of DU*	No. of PE*	Order No.
ZDU 4-2/3AN	Tension clamp connection	Solid / stranded Flexible / flexible with wire-end ferrule	0.5...6 mm² / ... 0.5...4 mm² / 0.5...4 mm²	4	1	8000004139
WDU 4	Screw connection	Solid / stranded Flexible / flexible with wire-end ferrule	0.5...6 mm² / 1.5...6 mm² 0.5...6 mm² / 0.5...4 mm²	5	2	8000004138

Note Markers numbered 1-50 (horizontal text) and mounting screws are included in the delivery.
*DU = feed-through terminals, PE = PE terminals

Distribution box with ATEX II 2GD T85°C Ex e II T6

Drill holes side A	Drill holes side B	No. of DU*	No. of PE*	Order No.
2 x M20x1.5	2 x M20x1.5	5	2	8000004216
2 x M20x1.5	2 x M20x1.5	4	1	8000004217

Terminal rail / mounting plate set

Product type	Type	Length	Order No.
Mounting rail	TS35 64 Klippon K4K11	64 mm	1910060000

All enclosures are equipped with an external earth stud connection.
*DU = feed-through terminals, PE = PE terminals

Klippon® K41

81 mm

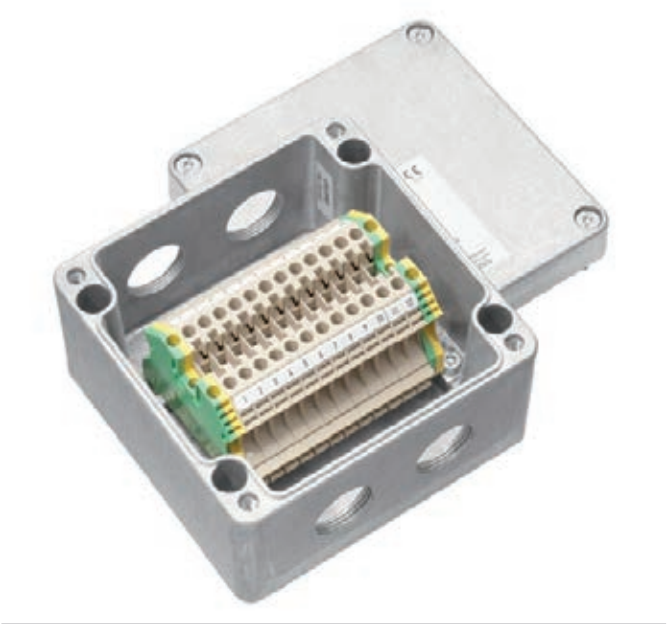

Height / Width / Depth	120 / 122 / 81 mm

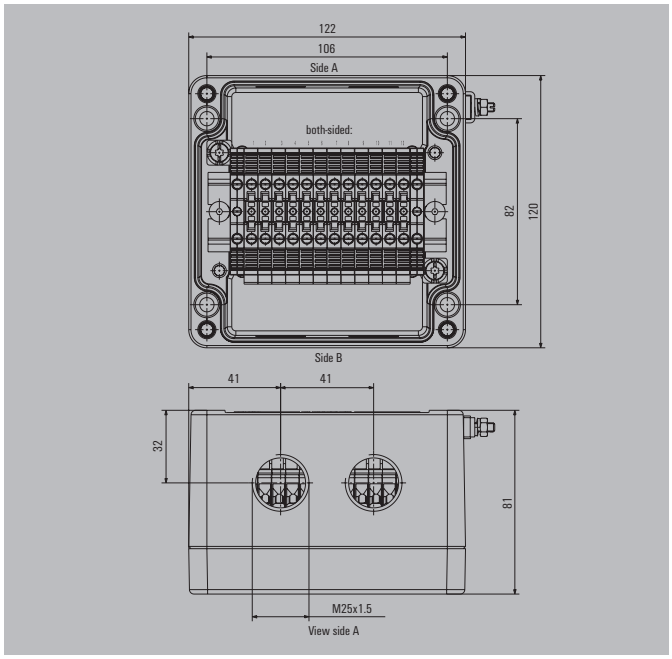

Accessories

Cable glands	Order No.
KSG M20 BN 0 NI 2 G20	1911560000
KSG M25 BN 0 NI 2 G25	1911570000
Stopping plugs	
KSPM M20 PL	1209910000
KSPM M25 PL	1209920000
VP M20-EXE MS	1737150000
VP M25-EXE MS	1737160000
Adapters	
ADAP EX M25-M16	1737550000
ADAP EX M25-M20	1737710000

Empty enclosure with tapped holes

Drill holes side A	Drill holes side B	Order No.
2 x M25x1.5	2 x M25x1.5	8000003446
3 x M20x1.5	3 x M20x1.5	8000003447

Note All enclosures are natural finish (unpainted).

Note You can find markers and labels in the Terminal Block Catalogue. Wall-mounting options can be found in Chapter B under Klippon® K

Terminal block, suitable for empty enclosure

Type	Type of connection	Conductor can be clamped	Rated cross-section	No. of DU*	No. of PE*	Order No.
ZDU 4-2/3AN	Tension clamp connection	Solid / stranded	0.5...6 mm² / ...	9	2	8000003445
		Flexible / flexible with wire-end ferrule	0.5...4 mm² / 0.5...4 mm²			
WDU 4	Screw connection	Solid / stranded	0.5...6 mm² / 1.5...6 mm²	12	2	8000003444
		Flexible / flexible with wire-end ferrule	0.5...6 mm² / 0.5...4 mm²			

Note Markers numbered 1-50 (horizontal text) and mounting screws are included in the delivery.
*DU = feed-through terminals, PE = PE terminals

Distribution box with ATEX II 2GD T85°C Ex e II T6

Drill holes side A	Drill holes side B	No. of DU*	No. of PE*	Order No.
3 x M20x1.5	3 x M20x1.5	12	2	8000003591
3 x M20x1.5	3 x M20x1.5	9	2	8000003592
2 x M25x1.5	2 x M25x1.5	12	2	8000003589
2 x M25x1.5	2 x M25x1.5	9	2	8000003590

Note All enclosures are equipped with an external earth stud connection.
*DU = feed-through terminals, PE = PE terminals

Terminal rail / mounting plate set

Product type	Type	Length	Order No.
Mounting rail	TS35 105 Klippon K41/POK4	105 mm	1910070000

Note Supplied with mounting screws for the mounting rail or mounting plate

Klippon® K5

90 mm

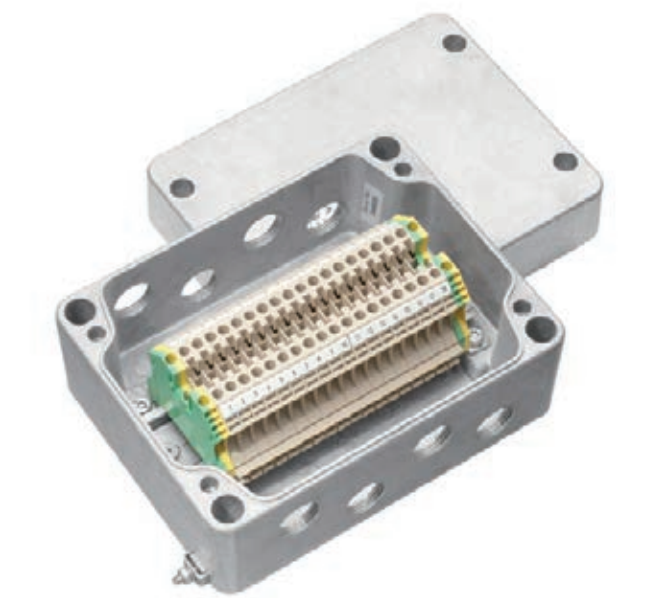

Height / Width / Depth	130 / 170 / 90 mm

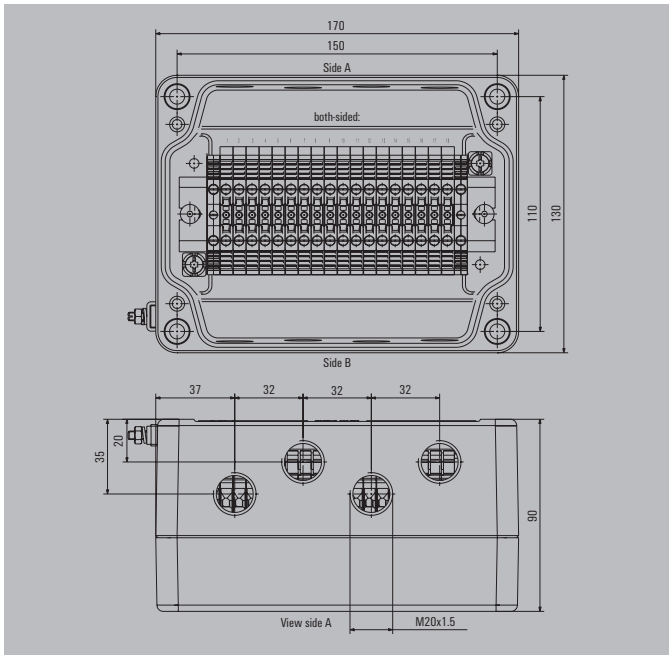

Accessories

Cable glands	Order No.
KSG M20 BN 0 NI 2 G20	1911560000
Stopping plugs	
KSPM M20 PL	1209910000
VP M20-EXE MS	1737150000
Adapters	
ADAP EX M20-M16	1737560000

Empty enclosure with tapped holes

Drill holes side A	Drill holes side B	Order No.
4 x M20x1.5	4 x M20x1.5	8000004158

Note All enclosures are natural finish (unpainted).

Note You can find markers and labels in the Terminal Block Catalogue. Wall-mounting options can be found in Chapter B under Klippon® K

Terminal block, suitable for empty enclosure

Type	Type of connection	Conductor can be clamped	Rated cross-section	No. of DU*	No. of PE*	Order No.
ZDU 4-2/3AN	Tension clamp connection	Solid / stranded	0.5...6 mm² / ...	15	2	8000004141
		Flexible / flexible with wire-end ferrule	0.5...4 mm² / 0.5...4 mm²			
WDU 4	Screw connection	Solid / stranded	0.5...6 mm² / 1.5...6 mm²	17	2	8000004140
		Flexible / flexible with wire-end ferrule	0.5...6 mm² / 0.5...4 mm²			

Note Markers numbered 1-50 (horizontal text) and mounting screws are included in the delivery.
*DU = feed-through terminals, PE = PE terminals

Distribution box with ATEX II 2GD T85°C Ex e II T6

Drill holes side A	Drill holes side B	No. of DU*	No. of PE*	Order No.
4 x M20x1.5	4 x M20x1.5	17	2	8000004218
4 x M20x1.5	4 x M20x1.5	15	2	8000004219

Note All enclosures are equipped with an external earth stud connection.
*DU = feed-through terminals, PE = PE terminals

Terminal rail / mounting plate set

Product type	Type	Length	Order No.
Mounting rail	TS35/148 KLIPPON K5 CSS	148 mm	1910080000

Note Supplied with mounting screws for the mounting rail or mounting plate

Klippon® K52

91 mm

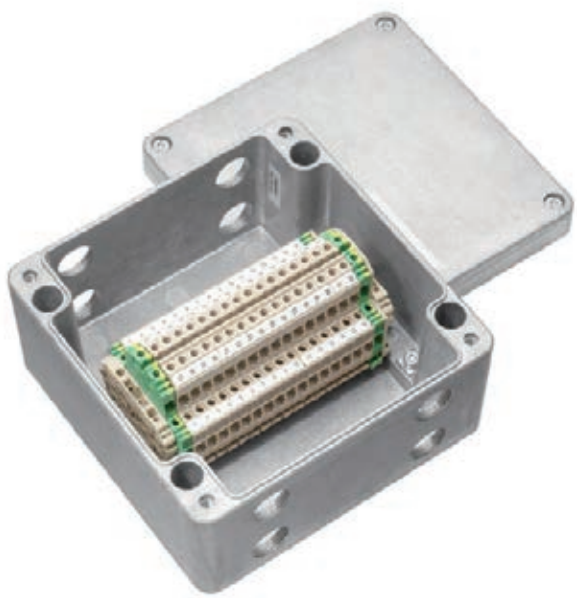

Height / Width / Depth	160 / 160 / 91 mm

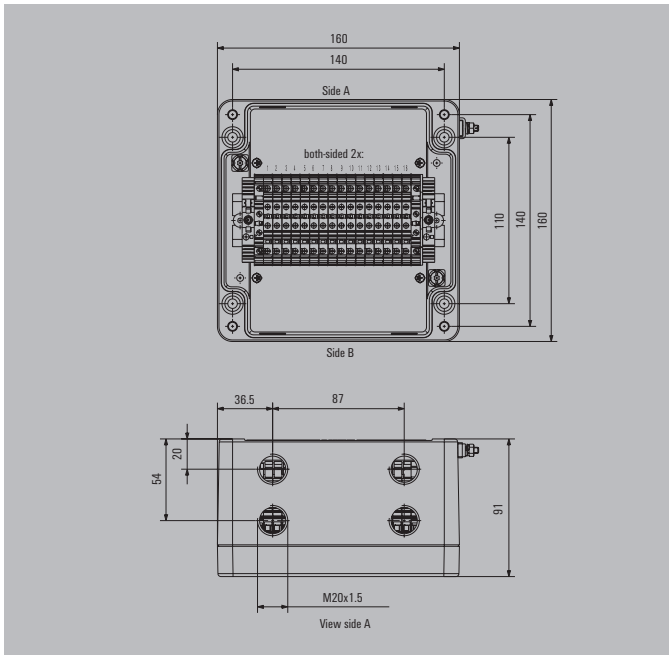

Accessories

Cable glands	Order No.
KSG M20 BN 0 NI 2 G20	1911560000
Stopping plugs	
KSPM M16 PL	1209890000
VP M20-EXE MS	1737150000
Adapters	
ADAP EX M20-M16	1737560000

Empty enclosure with tapped holes

	Drill holes side A	Drill holes side B	Order No.
	4 x M20x1.5	4 x M20x1.5	8000004159

Note All enclosures are unpainted

Note You can find markers and labels in the Terminal Block Catalogue. Wall-mounting options can be found in Chapter B under Klippon® K

Terminal block, suitable for empty enclosure

	Type	Type of connection	Conductor can be clamped	Rated cross-section	No. of DU*	No. of PE*	Order No.
	ZDK 2.5	Tension clamp connection	Solid / stranded Flexible / flexible with wire-end ferrule	0.5...2.5 mm² / ... 0.5...2.5 mm² / 0.5...2.5 mm²	19	2	8000004143
	WDK 4N	Screw connection	Solid / stranded Flexible / flexible with wire-end ferrule	0.5...6 mm² / 1.5...6 mm² 0.5...4 mm² / 0.5...4 mm²	16	2	8000004142

Note Markers numbered 1-50 (horizontal text) and mounting screws are included in the delivery.
*DU = feed-through terminals, PE = PE terminals

Distribution box with ATEX II 2GD T85°C Ex e II T6

Drill holes side A	Drill holes side B	No. of DU*	No. of PE*	Order No.
4 x M20x1.5	4 x M20x1.5	16	2	8000004220
4 x M20x1.5	4 x M20x1.5	19	2	8000004221

Note All enclosures are equipped with an external earth stud connection.
*DU = feed-through terminals, PE = PE terminals

Terminal rail / mounting plate set

	Product type	Type	Length	Order No.
	Mounting rail	TS35/140 Klippon K52 POK51	140 mm	1910100000

Note Supplied with mounting screws for the mounting rail or mounting plate

Klippon® POK – Polyester enclosures

The Klippon® POK range is based on a high-quality glass fibre-reinforced polyester enclosure which represents an economical solution for electrical connections. The enclosures are ideal wherever corrosion resistance, impact resistance and a high IP protection class are required.

Features of the enclosure range:
- 17 sizes and 2 versions
- Stainless Steel lid screws
- Fixing holes located outside the sealed area
- Threaded holes for mounting rails
- Approved to the latest international standards

Our assembly service can supply these enclosures preassembled with terminals and cable glands according to customer requirements.

Overview of enclosures

Ordering data

Description	Dimensions in mm	Standard	Ex Enclosures
Klippon® POK 1	75 x 80 x 56	1277200000	9510210000
Klippon® POK 2	75 x 110 x 56	1277300000	9510220000
Klippon® POK 3	75 x 160 x 56	1277400000	9510320000
Klippon® POK 31	75 x 190 x 56	1565400000	9510330000
Klippon® POK 32	75 x 230 x 56	9510510000	9510340000
Klippon® POK 4	120 x 122 x 91	1277500000	9510230000
Klippon® POK 5	120 x 220 x 91	1277600000	9510240000
Klippon® POK 51	160 x 160 x 91	1565410000	9510250000
Klippon® POK 6	160 x 260 x 91	1277700000	9510260000
Klippon® POK 7	160 x 360 x 91	1277800000	9510270000
Klippon® POK 71	160 x 560 x 91	9510520000	9510350000
Klippon® POK 8	250 x 255 x 121	1565420000	9510280000
Klippon® POK 9	250 x 400 x 121	1565430000	9510290000
Klippon® POK 91	250 x 600 x 121	9510470000	9510300000
Klippon® POK 10	405 x 400 x 121	1565440000	9510310000
Klippon® POK 11	250 x 255 x 161	9510530000	9510360000
Klippon® POK 12	250 x 400 x 161	9510540000	9510370000
Note			

Technical Overview

Features

- For use in hazardous area and industrial applications
- Extremely robust and impact resistant due to the high amount of glass fibre
- Approved to the latest international standards (e.g. ATEX, cULus, GOST)

Note	The enclosure range Klippon® POK can be assembled with terminals or other approved equipment by our Application-Specific Solutions service.

Technical data

	Ex	Standard
Enclosure material	Glass fibre-reinforced polyester to DIN 16913 with added graphite	Glass fibre-reinforced polyester to DIN 16913
Surface	Black, similar to RAL 9011	Grey, similar to RAL7001
IP Rating	IP 66	IP 66
Equipment mounting	M4 to M6 threaded bushes	M4 to M6 threaded bushes
Enclosure mounting	4 holes for M4 to M6 screw	4 holes for M4 to M6 screws
Lid fixing	M4/M6 slothead / crosshead screws from stainless steel	M4/M6 slothead / crosshead screws from stainless steel
Impact Resistance	7J	7J
Gasket material	Silicone (VMQ)	Chloroprene
Temperature range	-55 °C...+100 °C	-40 °C...+90 °C
Torque screws of lid M4*	2.0 - 2.5 Nm	2.0 - 2.5 Nm
Torque screws of lid M6*	2.5 - 3.0 Nm	2.5 - 3.0 Nm
Flammability	UL94 V0	UL94 V0
Toxicity	Halogen and cadmium-free	Halogen and cadmium-free
Note	We deliver enclosures through our assembly service which are ready to be connected and suitable for every application * Depending on the screw head size, the lid can be fastened using either our slotted or cross-head screwdrivers	

Approvals for empty enclosures

	Ex	Standard
ATEX certificate	KEMA 02ATEX2078 U	
ATEX marking	II 2 GD Ex e II	
GOST Ex	POCC DE.ME92.B01149	
GOST	POCC DE.ME25.B01450	POCC DE.ME25.B01450
cULus		E 223801
Lloyds Register		07/20008
Russian Maritime Register	11040200	11040200
Germanischer Lloyd		4453607 HH
Installation	The Klippon® POK enclosure range can be pre-fitted in our customer specific production department according to your wishes; as an example, terminals, or other approved components, can be installed as required.	
	This enclosure range is component certified. An additional certifications is required, when other electronic equipment will be installed into the enclosure.	

Approvals terminal enclosures

	Ex	Standard
ATEX certificate	KEMA 03ATEX2077	
ATEX marking	Ⓔx II 2 GD T85°C/T100°C Ex e II T6/T5 Ⓔx II 2 (1) GD T85°C/T100°C Ex e [ia] IIC T6/T5 Ⓔx II GD T85°C/T100°C Ex ia IIC T6/T5 IP64/IP65/IP66	
Note	If you have specific requirements of equipment in hazardous area applications, please contact Weidmüller to get a copy of the complete certificates.	

Klippon® POK 1

Depth 56 mm

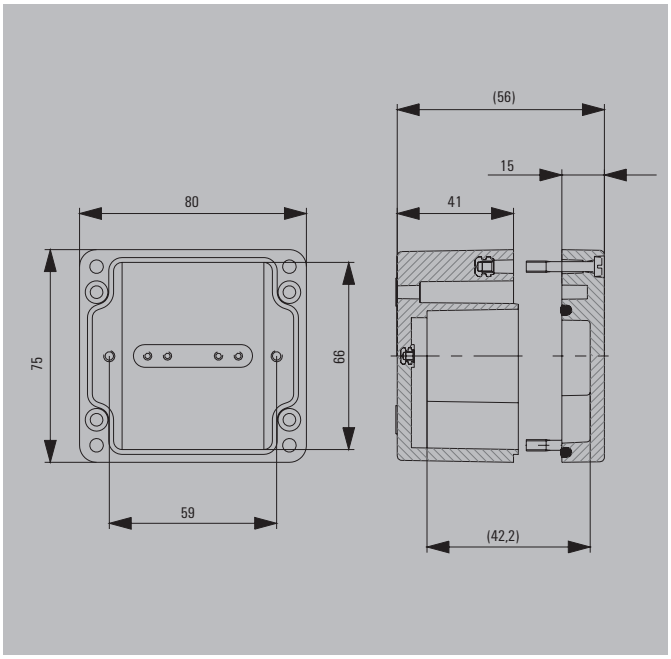

Height/Width/Depth	75 / 80 / 56 mm

Ordering data

RAL 7001	Order No.
Standard, grey	1277200000
RAL 9011	
Ex environment enclosure, black	9510210000

Note The overview page lists the ambient temperatures. Colour variations may occur under certain circumstances.

Accessories

Terminal rail, Set	Order No.
15 mm width	1928060000
Mounting plate	
Steel sheet, zinc plated	9510570000
Hinge, diecast zinc, Set	
	1580360000
Brass Earth Continuity Plate	
	1390910000
External mounting feet, set of 4	
	9510900000

Note Accessories described above as sets, are supplied with fixing materials.
For this enclosure only one hinge is required to be fitted to the longest side.

Max. number of terminals (industry)

Assembly with terminal	vertical	horizontal
2.5 mm²	1x1*	1x5
4 mm²	1x1*	1x4
6 mm²		
10 mm²		
16 mm²		

Note *Please refer to the Terminal Block Catalogue or the SAK Range for more information about populating the enclosures with terminal blocks. We recommend at most one BK 6 or BK 6 CRN (0625220000) in vertical installations. There are no pre-defined mounting points set within this enclosure for installing internal equipment in a vertical position.

Number of cable entries

Number of cable entries	A / B	C / D
M12	4	1
M16	2	1
M20	1	1
M25	1	
M32		
M40		
M50		
M63		

Note **Our IP 68 plastic cable glands fitted without a bruss plate (cruciform) serve as a reference for these recommended values.

Klippon® POK 2

Depth 56 mm

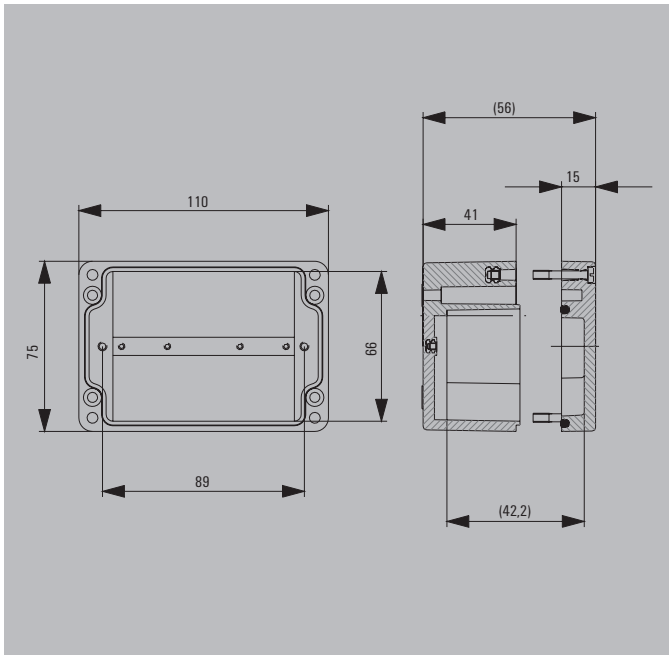

Height/Width/Depth	75 / 110 / 56 mm

Ordering data

RAL 7001	Order No.
Standard, grey	1277300000
RAL 9011	
Ex environment enclosure, black	9510220000

Note The overview page lists the ambient temperatures. Colour variations may occur under certain circumstances.

Accessories

Terminal rail, Set	Order No.
15 mm width	1928070000
Mounting plate	
Steel sheet, zinc plated	9510580000
Hinge, diecast zinc, Set	
	1580360000
Brass Earth Continuity Plate	
	1390920000
External mounting feet, set of 4	
	9510900000

Note Accessories described above as sets, are supplied with fixing materials.
For this enclosure only one hinge is required to be fitted to the longest side.

Max. number of terminals (industry)

Assembly with terminal	vertical	horizontal
2.5 mm²	1x1*	1x10
4 mm²	1x1*	1x9
6 mm²		
10 mm²		
16 mm²		

Note *Please refer to the Terminal Block Catalogue or the SAK Range for more information about populating the enclosures with terminal blocks. We recommend at most one BK 6 or BK 6 CRN (0625220000) in vertical installations. There are no pre-defined mounting points set within this enclosure for installing internal equipment in a vertical position.

Number of cable entries

Number of cable entries	A / B	C / D
M12	7	1
M16	3	1
M20	2	1
M25	2	
M32		
M40		
M50		
M63		

Note **Our IP 68 plastic cable glands fitted without a bruss plate (cruciform) serve as a reference for these recommended values.

Klippon® POK 3

Depth **56 mm**

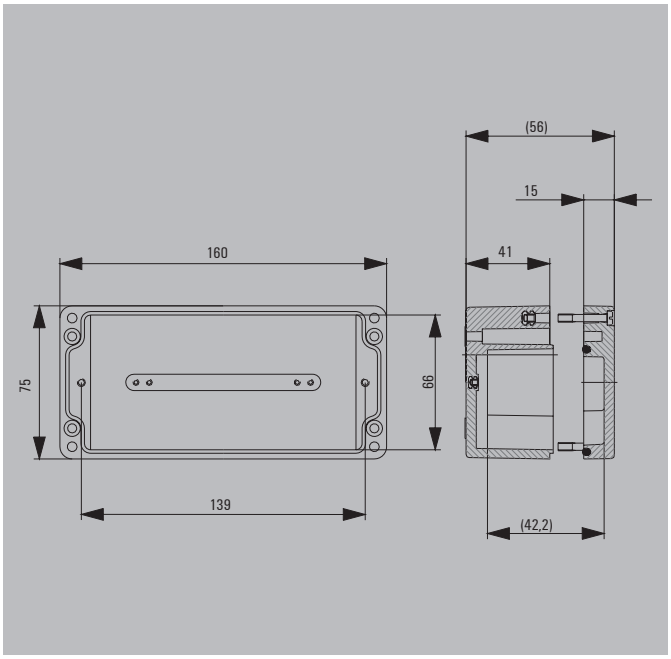

Height/Width/Depth	75 / 160 / 56 mm

Ordering data

RAL 7001	Order No.
Standard, grey	1277400000
RAL 9011	
Ex environment enclosure, black	9510320000

Note The overview page lists the ambient temperatures. Colour variations may occur under certain circumstances.

Accessories

Terminal rail, Set	Order No.
15 mm width	1928080000
Mounting plate	
Steel sheet, zinc plated	9510680000
Hinge, diecast zinc, Set	
	1580360000
Brass Earth Continuity Plate	
	1390930000
External mounting feet, set of 4	
	9510900000

Note Accessories described above as sets, are supplied with fixing materials.
For this enclosure only one hinge is required to be fitted to the longest side.

Max. number of terminals (industry)

Assembly with terminal	vertical	horizontal
2.5 mm²	*	1x20
4 mm²	*	1x17
6 mm²		
10 mm²		
16 mm²		

Note *Please refer to the Terminal Block Catalogue or the SAK Range for more information about populating the enclosures with terminal blocks. We recommend at most one BK 6 or BK 6 CRN (0625220000) in vertical installations. There are no pre-defined mounting points set within this enclosure for installing internal equipment in a vertical position.

Number of cable entries

Number of cable entries	A / B	C / D
M12	11	1
M16	5	1
M20	4	1
M25	3	
M32		
M40		
M50		
M63		

Note **Our IP 68 plastic cable glands fitted without a bruss plate (cruciform) serve as a reference for these recommended values.

Klippon® POK 31

Depth 56 mm

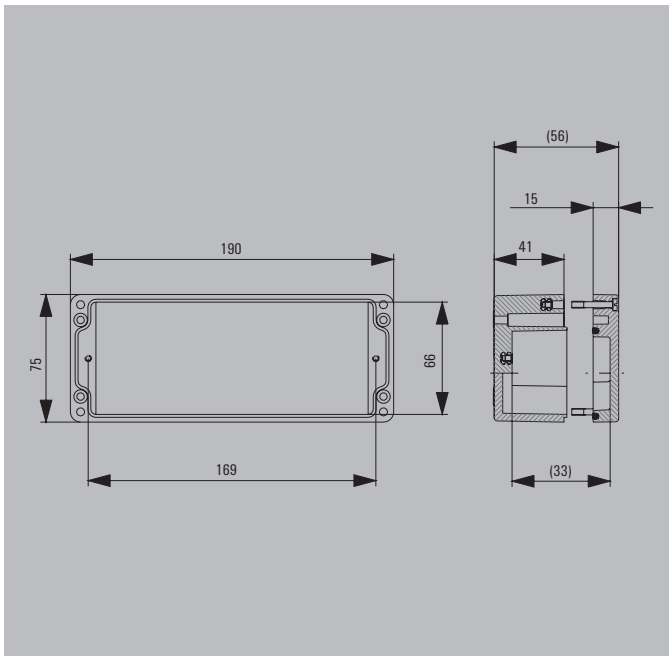

Height/Width/Depth	75 / 190 / 56 mm

Ordering data

RAL 7001	Order No.
Standard, grey	1565400000
RAL 9011	
Ex environment enclosure, black	9510330000

Note The overview page lists the ambient temperatures. Colour variations may occur under certain circumstances.

Accessories

Terminal rail, Set	Order No.
15 mm width	
Mounting plate	
Steel sheet, zinc plated	9510690000
Hinge, diecast zinc, Set	
	1580360000
Brass Earth Continuity Plate	
	1390940000
External mounting feet, set of 4	
	9510900000

Note Accessories described above as sets, are supplied with fixing materials.
For this enclosure only one hinge is required to be fitted to the longest side.

Max. number of terminals (industry)

Assembly with terminal	vertical	horizontal
2.5 mm²	*	1x26
4 mm²	*	1x22
6 mm²		
10 mm²		
16 mm²		

Note *Please refer to the Terminal Block Catalogue or the SAK Range for more information about populating the enclosures with terminal blocks. We recommend at most one BK 6 or BK 6 CRN (0625220000) in vertical installations. There are no pre-defined mounting points set within this enclosure for installing internal equipment in a vertical position.

Number of cable entries

Number of cable entries	A / B	C / D
M12	14	1
M16	6	1
M20	5	1
M25	4	
M32		
M40		
M50		
M63		

Note **Our IP 68 plastic cable glands fitted without a bruss plate (cruciform) serve as a reference for these recommended values.

Klippon® POK 32

Depth **56 mm**

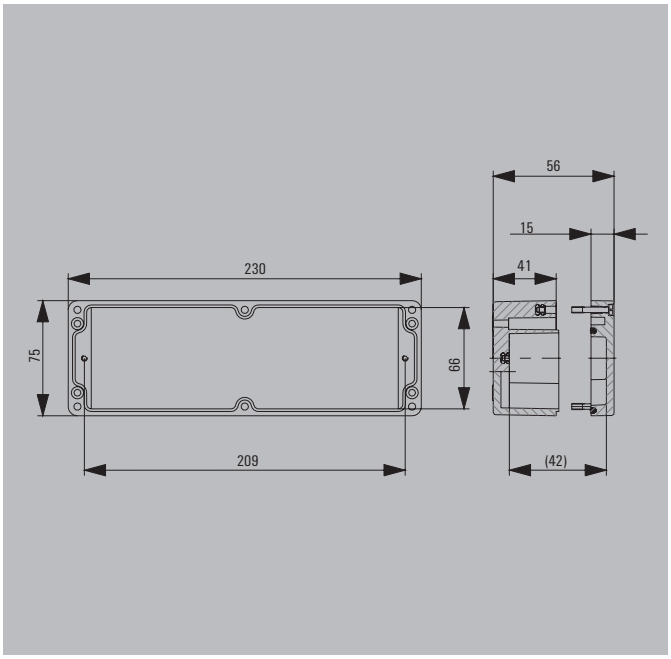

Height/Width/Depth	75 / 230 / 56 mm

Ordering data

RAL 7001	Order No.
Standard, grey	9510510000
RAL 9011	
Ex environment enclosure, black	9510340000

Note	The overview page lists the ambient temperatures. Colour variations may occur under certain circumstances.

Accessories

Terminal rail, Set	Order No.
15 mm width	
Mounting plate	
Steel sheet, zinc plated	9510700000
Hinge, diecast zinc, Set	
	1580360000
Brass Earth Continuity Plate	
	1390950000
External mounting feet, set of 4	
	9510900000

Note	Accessories described above as sets, are supplied with fixing materials. For this enclosure only two hinges are required to be fitted to the longest side.

Max. number of terminals (industry)

Assembly with terminal	vertical	horizontal
2.5 mm²	*	1x33
4 mm²	*	1x28
6 mm²		
10 mm²		
16 mm²		

Note	*Please refer to the Terminal Block Catalogue or the SAK Range for more information about populating the enclosures with terminal blocks. We recommend at most one BK 6 or BK 6 CRN (0625220000) in vertical installations. There are no pre-defined mounting points set within this enclosure for installing internal equipment in a vertical position.

Number of cable entries

Number of cable entries	A / B	C / D
M12	16	1
M16	6	1
M20	6	1
M25	4	
M32		
M40		
M50		
M63		

Note	**Our IP 68 plastic cable glands fitted without a bruss plate (cruciform) serve as a reference for these recommended values.

Klippon® POK 4

Depth 91 mm

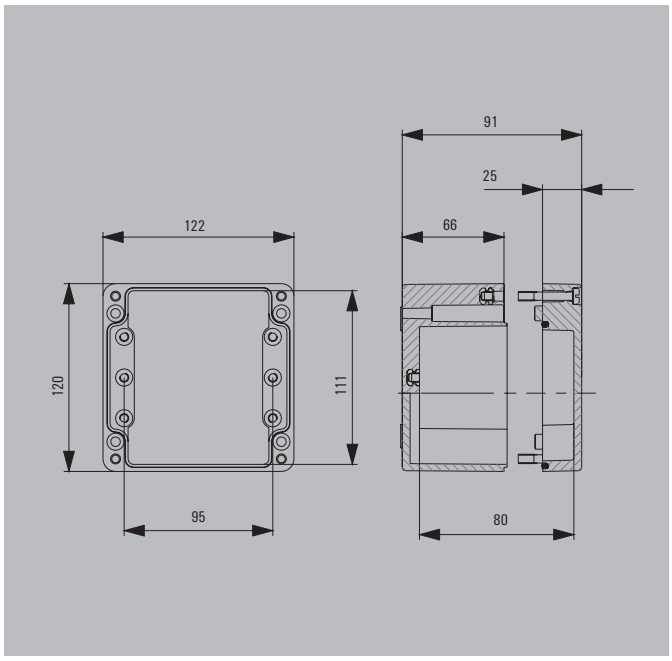

Height/Width/Depth	120 / 122 / 91 mm

Ordering data

RAL 7001	Order No.
Standard, grey	1277500000
RAL 9011	
Ex environment enclosure, black	9510230000

Note The overview page lists the ambient temperatures. Colour variations may occur under certain circumstances.

Accessories

Terminal rail, Set	Order No.
15 mm width	1928110000
Mounting plate	
Steel sheet, zinc plated	9510590000
Hinge, diecast zinc, Set	
	1580360000
Brass Earth Continuity Plate	
	1390970000
External mounting feet, set of 4	
	9510910000

Note Accessories described above as sets, are supplied with fixing materials.
For this enclosure only two hinges are required to be fitted to the longest side.

Max. number of terminals (industry)

Assembly with terminal	vertical	horizontal
2.5 mm²	*	1x12
4 mm²	*	1x10
6 mm²	*	1x7
10 mm²	*	1x6
16 mm²	*	1x5

Note The mounting rails are designed to be installed directly.
Assembly with terminals provides for 10 mm clearance to the ends of the mounting rail.
Ordering recommendations:
TS 35 mounting rail (screw-type terminals) WDU 2.5 1020000000 / (tension clamp terminals) ZDU 2.5 1608510000
*There are no pre-defined mounting points set within this enclosure for installing internal equipment in a vertical position.

Number of cable entries

Number of cable entries	A / B	C / D
M12	12	8
M16	6	4
M20	4	3
M25	2	1
M32	1	1
M40		
M50		
M63		

Note **Our IP 68 plastic cable glands fitted without a bruss plate (cruciform) serve as a reference for these recommended values.

Klippon® POK 5

Depth 91 mm

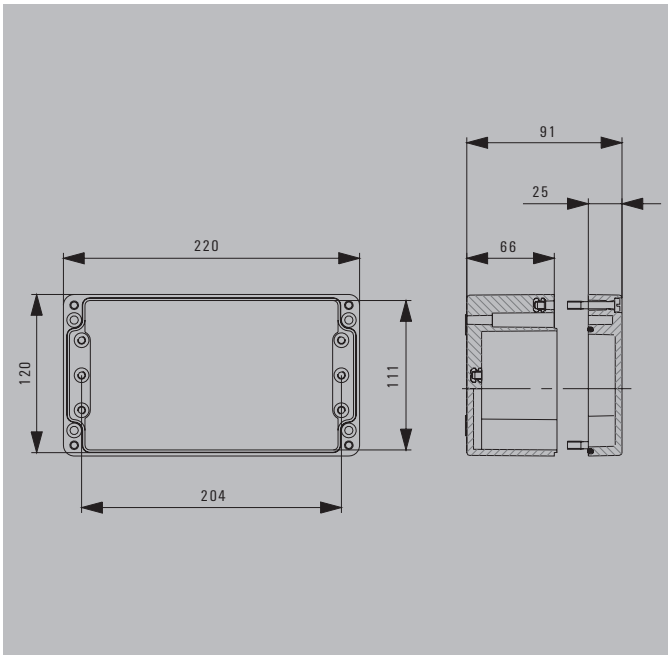

Height/Width/Depth	120 / 220 / 91 mm

Ordering data

RAL 7001	Order No.
Standard, grey	1277600000
RAL 9011	
Ex environment enclosure, black	9510240000

Note The overview page lists the ambient temperatures. Colour variations may occur under certain circumstances.

Accessories

Terminal rail, Set	Order No.
15 mm width	
Mounting plate	
Steel sheet, zinc plated	9510600000
Hinge, diecast zinc, Set	
	1580360000
Brass Earth Continuity Plate	
	1390980000
External mounting feet, set of 4	
	9510910000

Note Accessories described above as sets, are supplied with fixing materials.
For this enclosure only two hinges are required to be fitted to the longest side.

Max. number of terminals (industry)

Assembly with terminal	vertical	horizontal
2.5 mm²	*	1x31
4 mm²	*	1x26
6 mm²	*	1x19
10 mm²	*	1x15
16 mm²	*	1x13

Note The mounting rails are designed to be installed directly.
Assembly with terminals provides for 10 mm clearance to the ends of the mounting rail.
Ordering recommendations:
TS 35 mounting rail (screw-type terminals) WDU 2.5 1020000000 / (tension clamp terminals) ZDU 2.5 1608510000
*There are no pre-defined mounting points set within this enclosure for installing internal equipment in a vertical position.

Number of cable entries

Number of cable entries	A / B	C / D
M12	24	8
M16	14	4
M20	12	3
M25	5	1
M32	4	1
M40	3	
M50		
M63		

Note **Our IP 68 plastic cable glands fitted without a bruss plate (cruciform) serve as a reference for these recommended values.

Klippon® POK 51

Depth 91 mm

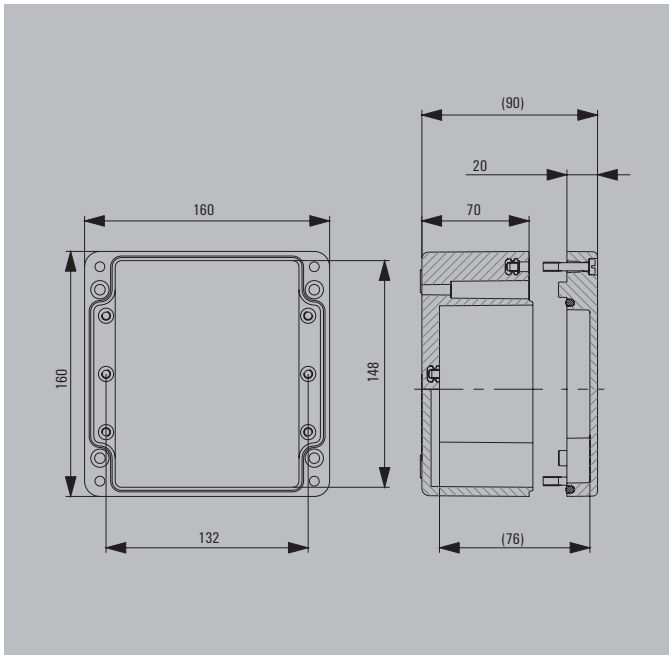

Height/Width/Depth	160 / 160 / 91 mm

Ordering data

RAL 7001	Order No.
Standard, grey	1565410000
RAL 9011	
Ex environment enclosure, black	9510250000

Note The overview page lists the ambient temperatures. Colour variations may occur under certain circumstances.

Accessories

Terminal rail, Set	Order No.
15 mm width	1928130000
Mounting plate	
Steel sheet, zinc plated	9510610000
Hinge, diecast zinc, Set	
	1580360000
Brass Earth Continuity Plate	
	1390990000
External mounting feet, set of 4	
	9510910000

Note Accessories described above as sets, are supplied with fixing materials.
For this enclosure only two hinges are required to be fitted to the longest side.

Max. number of terminals (industry)

Assembly with terminal	vertical	horizontal
2.5 mm²	*	1x17
4 mm²	*	1x14
6 mm²	*	1x11
10 mm²	*	1x9
16 mm²	*	1x7

Note The mounting rails are designed to be installed directly.
Assembly with terminals provides for 10 mm clearance to the ends of the mounting rail.
Ordering recommendations:
TS 35 mounting rail (screw-type terminals) WDU 2.5 1020000000 / (tension clamp terminals) ZDU 2.5 1608510000
*There are no pre-defined mounting points set within this enclosure for installing internal equipment in a vertical position.

Number of cable entries

Number of cable entries	A / B	C / D
M12	15	11
M16	12	6
M20	6	4
M25	3	2
M32	2	2
M40	2	1
M50		
M63		

Note **Our IP 68 plastic cable glands fitted without a bruss plate (cruciform) serve as a reference for these recommended values.

Klippon® POK 6

Depth 91 mm

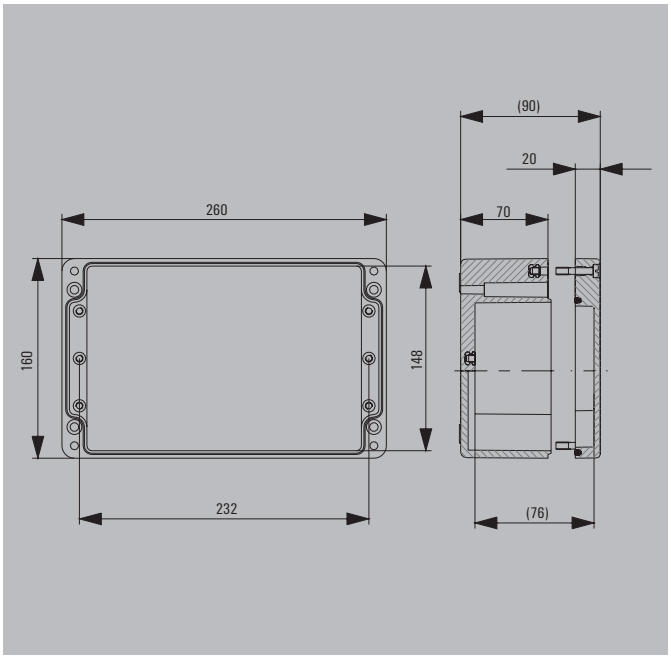

Height/Width/Depth	160 / 260 / 91 mm

Ordering data

RAL 7001	Order No.
Standard, grey	1277700000
RAL 9011	
Ex environment enclosure, black	9510260000

Note The overview page lists the ambient temperatures. Colour variations may occur under certain circumstances.

Accessories

Terminal rail, Set	Order No.
15 mm width	
Mounting plate	
Steel sheet, zinc plated	9510620000
Hinge, diecast zinc, Set	
	1580360000
Brass Earth Continuity Plate	
	1391000000
External mounting feet, set of 4	
	9510910000

Note Accessories described above as sets, are supplied with fixing materials.
For this enclosure only two hinges are required to be fitted to the longest side.

Max. number of terminals (industry)

Assembly with terminal	vertical	horizontal
2.5 mm²	*	1x36
4 mm²	*	1x30
6 mm²	*	1x23
10 mm²	*	1x16
16 mm²	*	1x16

Note The mounting rails are designed to be installed directly.
Assembly with terminals provides for 10 mm clearance to the ends of the mounting rail.
Ordering recommendations:
TS 35 mounting rail (screw-type terminals) WDU 2.5 1020000000 / (tension clamp terminals) ZDU 2.5 1608510000
*There are no pre-defined mounting points set within this enclosure for installing internal equipment in a vertical position.

Number of cable entries

Number of cable entries	A / B	C / D
M12	30	11
M16	24	6
M20	14	4
M25	5	2
M32	4	2
M40	3	1
M50		
M63		

Note **Our IP 68 plastic cable glands fitted without a bruss plate (cruciform) serve as a reference for these recommended values.

Klippon® POK 7

Depth 91 mm

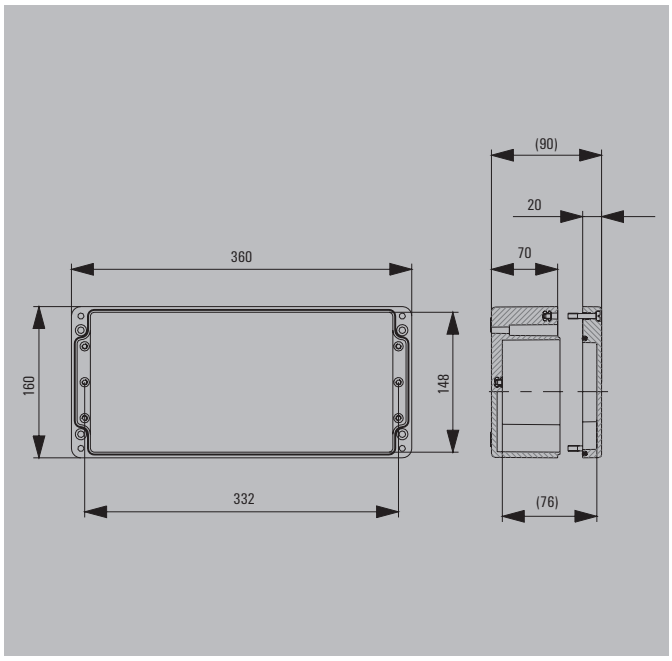

Height/Width/Depth	160 / 360 / 91 mm

Ordering data

RAL 7001	Order No.
Standard, grey	1277800000
RAL 9011	
Ex environment enclosure, black	9510270000

Note The overview page lists the ambient temperatures. Colour variations may occur under certain circumstances.

Accessories

Terminal rail, Set	Order No.
15 mm width	
Mounting plate	
Steel sheet, zinc plated	9510630000
Hinge, diecast zinc, Set	
	1580360000
Brass Earth Continuity Plate	
	1391010000
External mounting feet, set of 4	
	9510910000

Note Accessories described above as sets, are supplied with fixing materials.
For this enclosure only two hinges are required to be fitted to the longest side.

Max. number of terminals (industry)

Assembly with terminal	vertical	horizontal
2.5 mm²	*	1x56
4 mm²	*	1x47
6 mm²	*	1x36
10 mm²	*	1x29
16 mm²	*	1x24

Note The mounting rails are designed to be installed directly.
Assembly with terminals provides for 10 mm clearance to the ends of the mounting rail.
Ordering recommendations:
TS 35 mounting rail (screw-type terminals) WDU 2.5 1020000000 / (tension clamp terminals) ZDU 2.5 1608510000
*There are no pre-defined mounting points set within this enclosure for installing internal equipment in a vertical position.

Number of cable entries

Number of cable entries	A / B	C / D
M12	45	11
M16	36	6
M20	20	4
M25	8	2
M32	6	2
M40	5	1
M50		
M63		

Note **Our IP 68 plastic cable glands fitted without a bruss plate (cruciform) serve as a reference for these recommended values.

Klippon® POK 71

Depth 91 mm

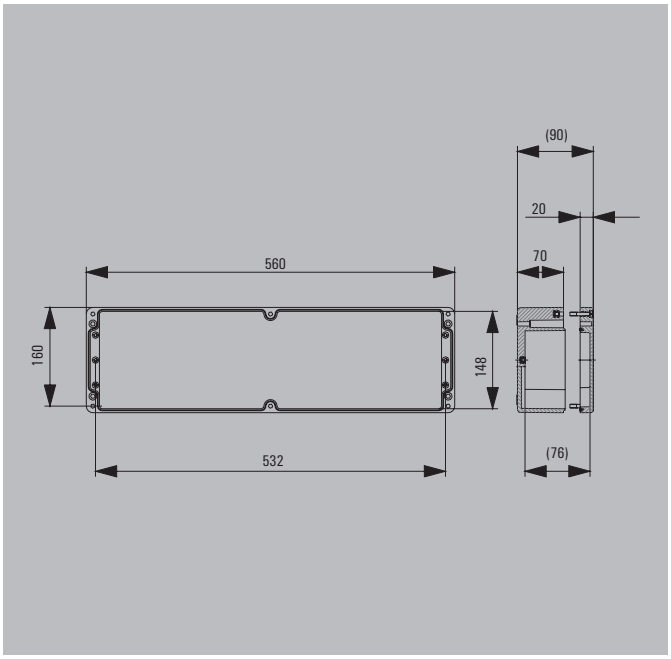

Height/Width/Depth	160 / 560 / 91 mm

Ordering data

RAL 7001	Order No.
Standard, grey	9510520000
RAL 9011	
Ex environment enclosure, black	9510350000

Note The overview page lists the ambient temperatures. Colour variations may occur under certain circumstances.

Accessories

Terminal rail, Set	Order No.
15 mm width	
Mounting plate	
Steel sheet, zinc plated	9510710000
Hinge, diecast zinc, Set	
	1580360000
Brass Earth Continuity Plate	
	1391020000
External mounting feet, set of 4	
	9510910000

Note Accessories described above as sets, are supplied with fixing materials.
For this enclosure only two hinges are required to be fitted to the longest side.

Max. number of terminals (industry)

Assembly with terminal	vertical	horizontal
2.5 mm²	*	1x94
4 mm²	*	1x79
6 mm²	*	1x60
10 mm²	*	1x49
16 mm²	*	1x41

Note The mounting rails are designed to be installed directly.
Assembly with terminals provides for 10 mm clearance to the ends of the mounting rail.
Ordering recommendations:
TS 35 mounting rail (screw-type terminals) WDU 2.5 1020000000 / (tension clamp terminals) ZDU 2.5 1608510000
*There are no pre-defined mounting points set within this enclosure for installing internal equipment in a vertical position.

Number of cable entries

Number of cable entries	A / B	C / D
M12	66	11
M16	58	6
M20	32	4
M25	12	2
M32	10	2
M40	8	1
M50		
M63		

Note **Our IP 68 plastic cable glands fitted without a bruss plate (cruciform) serve as a reference for these recommended values.

Klippon® POK 8

Depth 121 mm

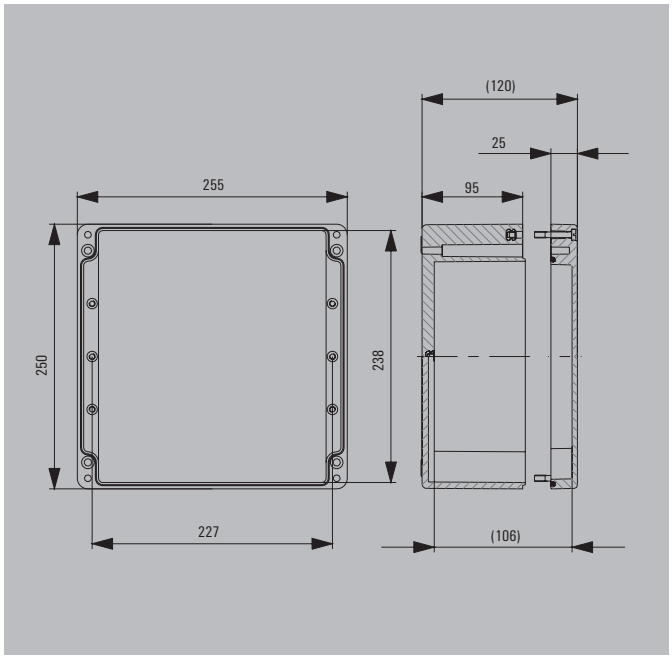

Height/Width/Depth	250 / 255 / 121 mm

Ordering data

RAL 7001	Order No.
Standard, grey	1565420000
RAL 9011	
Ex environment enclosure, black	9510280000

Note The overview page lists the ambient temperatures. Colour variations may occur under certain circumstances.

Accessories

Terminal rail, Set	Order No.
15 mm width	
Mounting plate	
Steel sheet, zinc plated	9510640000
Hinge, diecast zinc, Set	
	1580360000
Brass Earth Continuity Plate	
	1391030000
External mounting feet, set of 4	
	9510910000

Note Accessories described above as sets, are supplied with fixing materials.
For this enclosure only two hinges are required to be fitted to the longest side.

Max. number of terminals (industry)

Assembly with terminal	vertical	horizontal
2.5 mm²	*	2x38
4 mm²	*	2x31
6 mm²	*	2x23
10 mm²	*	2x19
16 mm²	*	2x15

Note The mounting rails are designed to be installed directly.
Assembly with terminals provides for 10 mm clearance to the ends of the mounting rail.
Ordering recommendations:
TS 35 mounting rail (screw-type terminals) WDU 2.5 1020000000 / (tension clamp terminals) ZDU 2.5 1608510000
*There are no pre-defined mounting points set within this enclosure for installing internal equipment in a vertical position.

Number of cable entries

Number of cable entries	A / B	C / D
M12	36	32
M16	32	21
M20	10	15
M25	10	8
M32	8	3
M40	3	3
M50	2	2
M63		

Note **Our IP 68 plastic cable glands fitted without a bruss plate (cruciform) serve as a reference for these recommended values.

Klippon® POK 9

Depth 121 mm

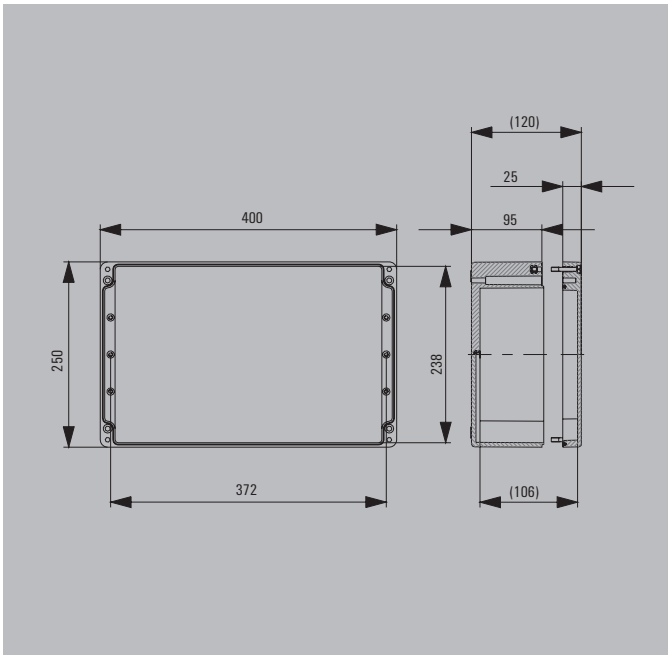

Height/Width/Depth	250 / 400 / 121 mm

Ordering data

RAL 7001	Order No.
Standard, grey	1565430000
RAL 9011	
Ex environment enclosure, black	9510290000

Note The overview page lists the ambient temperatures. Colour variations may occur under certain circumstances.

Accessories

Terminal rail, Set	Order No.
15 mm width	
Mounting plate	
Steel sheet, zinc plated	9510650000
Hinge, diecast zinc, Set	
	1580360000
Brass Earth Continuity Plate	
	1391040000
External mounting feet, set of 4	
	9510910000

Note Accessories described above as sets, are supplied with fixing materials.
For this enclosure only two hinges are required to be fitted to the longest side.

Max. number of terminals (industry)

Assembly with terminal	vertical	horizontal
2.5 mm²	*	2x67
4 mm²	*	2x55
6 mm²	*	2x41
10 mm²	*	2x33
16 mm²	*	2x27

Note The mounting rails are designed to be installed directly.
Assembly with terminals provides for 10 mm clearance to the ends of the mounting rail.
Ordering recommendations:
TS 35 mounting rail (screw-type terminals) WDU 2.5 1020000000 / (tension clamp terminals) ZDU 2.5 1608510000
*There are no pre-defined mounting points set within this enclosure for installing internal equipment in a vertical position.

Number of cable entries

Number of cable entries	A / B	C / D
M12	62	32
M16	54	21
M20	33	15
M25	18	8
M32	14	3
M40	6	3
M50	4	2
M63		

Note **Our IP 68 plastic cable glands fitted without a bruss plate (cruciform) serve as a reference for these recommended values.

Klippon® POK 91

Depth 121 mm

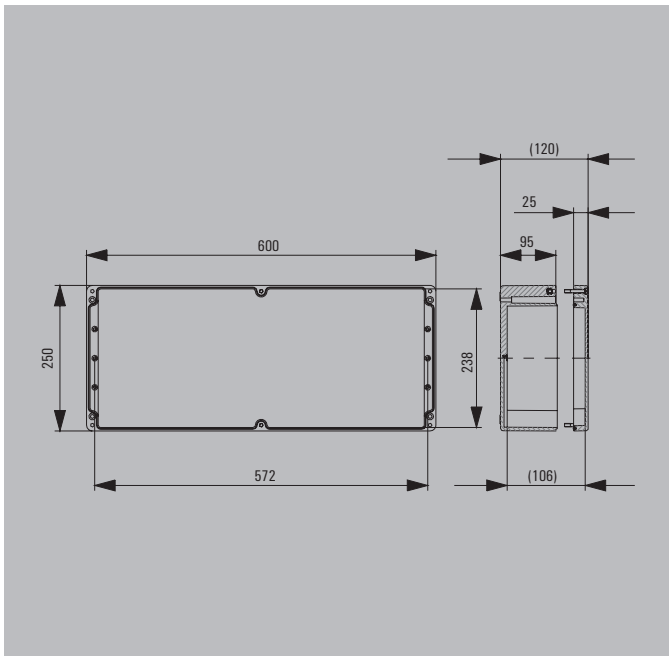

Height/Width/Depth	250 / 600 / 121 mm

Ordering data

RAL 7001	Order No.
Standard, grey	9510470000
RAL 9011	
Ex environment enclosure, black	9510300000

Note The overview page lists the ambient temperatures. Colour variations may occur under certain circumstances.

Accessories

Terminal rail, Set	Order No.
15 mm width	
Mounting plate	
Steel sheet, zinc plated	9510660000
Hinge, diecast zinc, Set	
	1580360000
Brass Earth Continuity Plate	
	1391050000
External mounting feet, set of 4	
	9510910000

Note Accessories described above as sets, are supplied with fixing materials.
For this enclosure only two hinges are required to be fitted to the longest side.

Max. number of terminals (industry)

Assembly with terminal	vertical	horizontal
2.5 mm²	*	2x107
4 mm²	*	2x89
6 mm²	*	2x66
10 mm²	*	2x53
16 mm²	*	2x44

Note The mounting rails are designed to be installed directly.
Assembly with terminals provides for 10 mm clearance to the ends of the mounting rail.
Ordering recommendations:
TS 35 mounting rail (screw-type terminals) WDU 2.5 1020000000 / (tension clamp terminals) ZDU 2.5 1608510000
*There are no pre-defined mounting points set within this enclosure for installing internal equipment in a vertical position.

Number of cable entries

Number of cable entries	A / B	C / D
M12	96	32
M16	80	21
M20	24	15
M25	20	8
M32	20	3
M40	8	3
M50	6	2
M63		

Note **Our IP 68 plastic cable glands fitted without a bruss plate (cruciform) serve as a reference for these recommended values.

Klippon® POK 10

Depth 121 mm

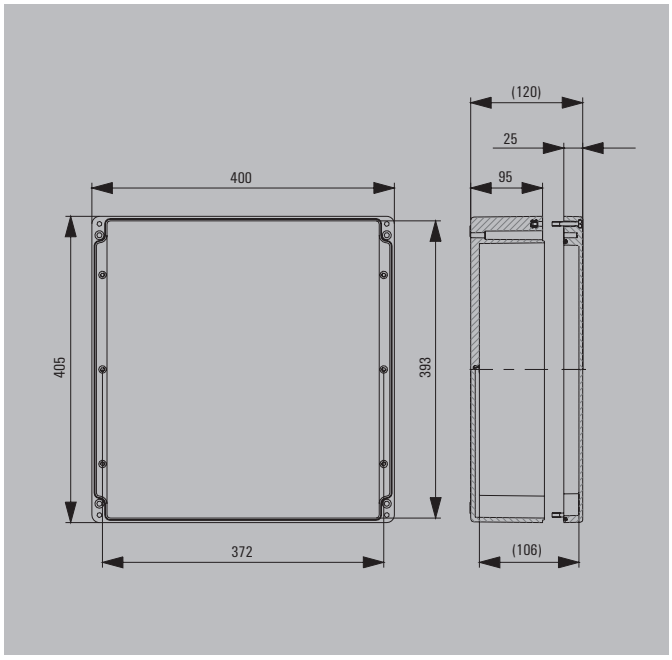

Height/Width/Depth	405 / 400 / 121 mm

Ordering data

RAL 7001	Order No.
Standard, grey	1565440000
RAL 9011	
Ex environment enclosure, black	9510310000

Note The overview page lists the ambient temperatures. Colour variations may occur under certain circumstances.

Accessories

Terminal rail, Set	Order No.
15 mm width	
Mounting plate	
Steel sheet, zinc plated	9510670000
Hinge, diecast zinc, Set	
	1580360000
Brass Earth Continuity Plate	
	1391070000
External mounting feet, set of 4	
	9510910000

Note Accessories described above as sets, are supplied with fixing materials.
For this enclosure only two hinges are required to be fitted to the longest side.

Max. number of terminals (industry)

Assembly with terminal	vertical	horizontal
2.5 mm²	*	3x67
4 mm²	*	3x55
6 mm²	*	3x41
10 mm²	*	3x33
16 mm²	*	3x27

Note The mounting rails are designed to be installed directly.
Assembly with terminals provides for 10 mm clearance to the ends of the mounting rail.
Ordering recommendations:
TS 35 mounting rail (screw-type terminals) WDU 2.5 1020000000 / (tension clamp terminals) ZDU 2.5 1608510000
*There are no prescribed possible attachment points in the enclosures for vertical installations.

Number of cable entries

Number of cable entries	A / B	C / D
M12	62	60
M16	54	39
M20	33	30
M25	18	18
M32	14	7
M40	6	5
M50	4	4
M63		

Note **Our IP 68 plastic cable glands fitted without a bruss plate (cruciform) serve as a reference for these recommended values.

Klippon® POK 11

Depth 161 mm

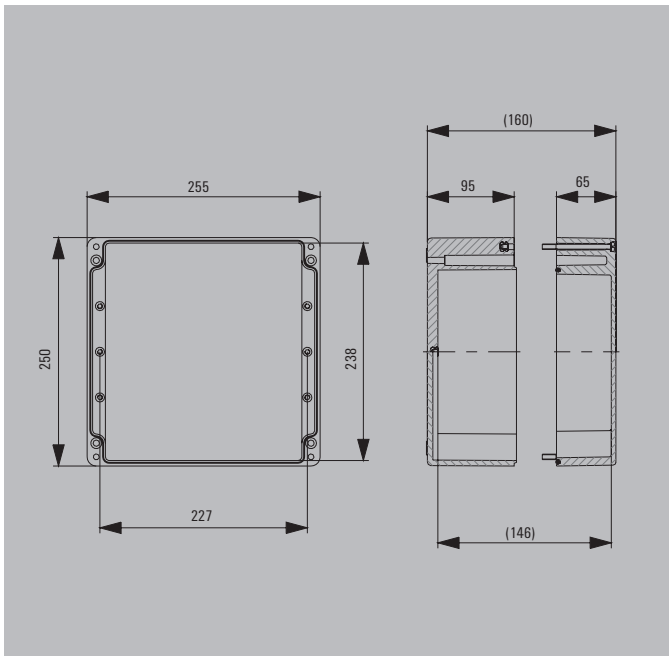

Height/Width/Depth	250 / 255 / 161 mm

Ordering data

RAL 7001	Order No.
Standard, grey	9510530000
RAL 9011	
Ex environment enclosure, black	9510360000

Note The overview page lists the ambient temperatures. Colour variations may occur under certain circumstances.

Accessories

Terminal rail, Set	Order No.
15 mm width	
Mounting plate	
Steel sheet, zinc plated	9510640000
Hinge, diecast zinc, Set	
	1580360000
Brass Earth Continuity Plate	
	1391030000
External mounting feet, set of 4	
	9510910000

Note Accessories described above as sets, are supplied with fixing materials.
For this enclosure only two hinges are required to be fitted to the longest side.

Max. number of terminals (industry)

Assembly with terminal	vertical	horizontal
2.5 mm²	*	2x38
4 mm²	*	2x31
6 mm²	*	2x23
10 mm²	*	2x19
16 mm²	*	2x15

Note The mounting rails are designed to be installed directly.
Assembly with terminals provides for 10 mm clearance to the ends of the mounting rail.
Ordering recommendations:
TS 35 mounting rail (screw-type terminals) WDU 2.5 1020000000 / (tension clamp terminals) ZDU 2.5 1608510000
*There are no prescribed possible attachment points in the enclosures for vertical installations.

Number of cable entries

Number of cable entries	A / B	C / D
M12	36	32
M16	32	21
M20	18	15
M25	10	8
M32	8	3
M40	3	3
M50	2	2
M63		

Note **Our IP 68 plastic cable glands fitted without a bruss plate (cruciform) serve as a reference for these recommended values.

Klippon® POK 12

Depth 161 mm

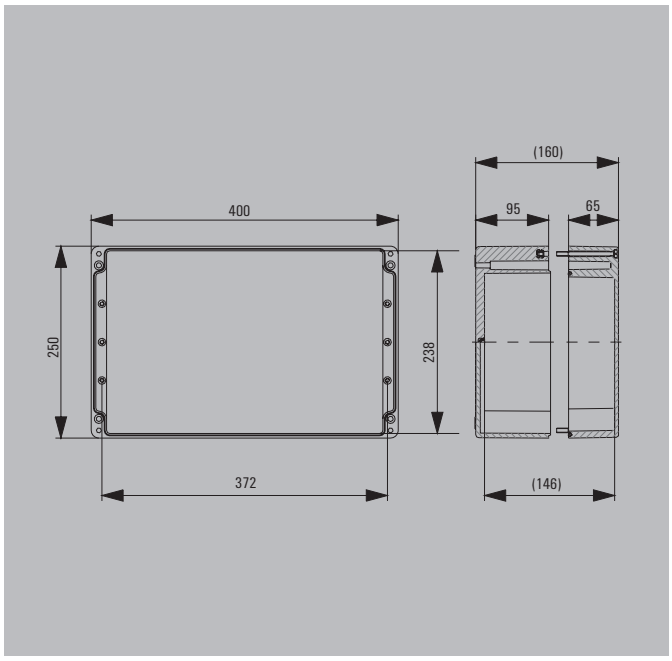

Height/Width/Depth	250 / 400 / 161 mm

Ordering data

RAL 7001	Order No.
Standard, grey	9510540000
RAL 9011	
Ex environment enclosure, black	9510370000

Note The overview page lists the ambient temperatures. Colour variations may occur under certain circumstances.

Accessories

Terminal rail, Set	Order No.
15 mm width	
Mounting plate	
Steel sheet, zinc plated	9510650000
Hinge, diecast zinc, Set	
	1580360000
Brass Earth Continuity Plate	
	1391040000
External mounting feet, set of 4	
	9510910000

Note Accessories described above as sets, are supplied with fixing materials.
For this enclosure only two hinges are required to be fitted to the longest side.

Max. number of terminals (industry)

Assembly with terminal	vertical	horizontal
2.5 mm²	*	2x67
4 mm²	*	2x55
6 mm²	*	2x41
10 mm²	*	2x33
16 mm²	*	2x27

Note The mounting rails are designed to be installed directly.
Assembly with terminals provides for 10 mm clearance to the ends of the mounting rail.
Ordering recommendations:
TS 35 mounting rail (screw-type terminals) WDU 2.5 1020000000 / (tension clamp terminals) ZDU 2.5 1608510000
*There are no prescribed possible attachment points in the enclosures for vertical installations.

Number of cable entries

Number of cable entries	A / B	C / D
M12	62	32
M16	54	21
M20	33	15
M25	18	8
M32	14	3
M40	6	3
M50	4	2
M63		

Note **Our IP 68 plastic cable glands fitted without a bruss plate (cruciform) serve as a reference for these recommended values.

Standardised distribution boxes – Product overview: Polyester enclosure

Use the product overview to find the right solution for you! Combine your own industrial version consisting of an enclosure, with or without threaded holes, a suitable mounting rail or pre-fitted terminal strips. The compatible components are always shown in a row.

Distribution boxes with Ex protection for use in explosive areas can be found in the last column. They come with threaded holes and are already equipped with a terminal strip.

Polyester enclosure

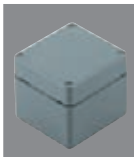

Empty enclosure without threaded holes

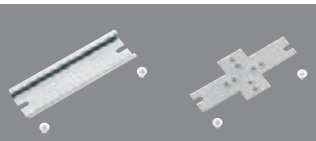

Mounting rail (TS)
Mounting plate (MOPL)

Dimensions of the enclosure height x width x depth mm	Enclosure type	Order No.	Qty.	Type	Length mm	Rail mounting slot dimensions mm	Order No.	Qty.
Polyester, RAL 7001								
75 x 80 x 56	Klippon® POK 1	**1277200000**	1	TS 15	68	4.5 x 20	**1928060000**	1
75 x 110 x 56	Klippon® POK 2	**1277300000**	1	TS 15	98	4.5 x 20	**1928070000**	1
75 x 160 x 56	Klippon® POK 3	**1277400000**	1	TS 15	147	4.5 x 20	**1928080000**	1
120 x 122 x 91	Klippon® POK 4	**1277500000**	1	TS 35	105	6.3 x 20	**1910070000**	1
160 x 160 x 91	Klippon® POK 51	**1565410000**	1	TS 35	140	6.3 x 20	**1910100000**	1
		protection class IP 66		suitable for the enclosure of the respective line				

[1] Multi-pole terminal blocks (block terminals BK 4, BK 6 or BK 12) can be directly fitted
[2] Space for further threaded holes up to M32

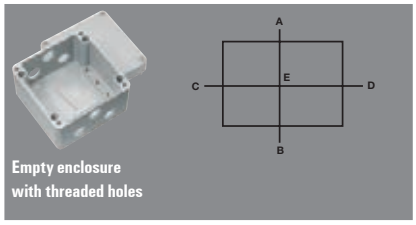

Empty enclosure with threaded holes

Terminal strip

Ex protected distribution boxes

Threaded hole Side A	Threaded hole Side B	Order No.	Qty.	Connection technology		Cross-section mm²	Number of DU*	Number of PE*	Order No.	Qty.	Order No.
2x M16	2x M16	8000004160	1	Screw connection		4	4	0	8000004365[1]	1	8000004222
2x M16	2x M16			Screw connection		4	6	2	8000004144	1	8000004223
2x M20	2x M20	8000004161	1	Screw connection		4	6	0	8000004366[1]	1	8000004224
2x M20	2x M20			Screw connection		4	10	2	8000004145	1	8000004225
4x M20	4x M20	8000004162	1	Screw connection		4	12	0	8000004367[1]	1	8000004226
4x M20	4x M20			Screw connection		4	18	2	8000004146	1	8000004228
3x M20	3x M20	8000003448	1	Screw connection		4	12	2	8000003444	1	8000003593
3x M20	3x M20			Tension clamp connection		4	9	2	8000003445	1	8000003594
4x M20	4x M20	8000004164[2]	1	Screw connection		4	16	2	8000004142	1	8000004229
4x M20	4x M20			Tension clamp connection		2.5	19	2	8000004143	1	8000004230

suitable for the enclosures of the respective line
*DU = feed-through terminals, PE = PE terminals

Ex enclosure with an external earthing connection, holes and strip terminals in each row

Klippon® POK1

56 mm

Height / Width / Depth	75 / 80 / 56 mm

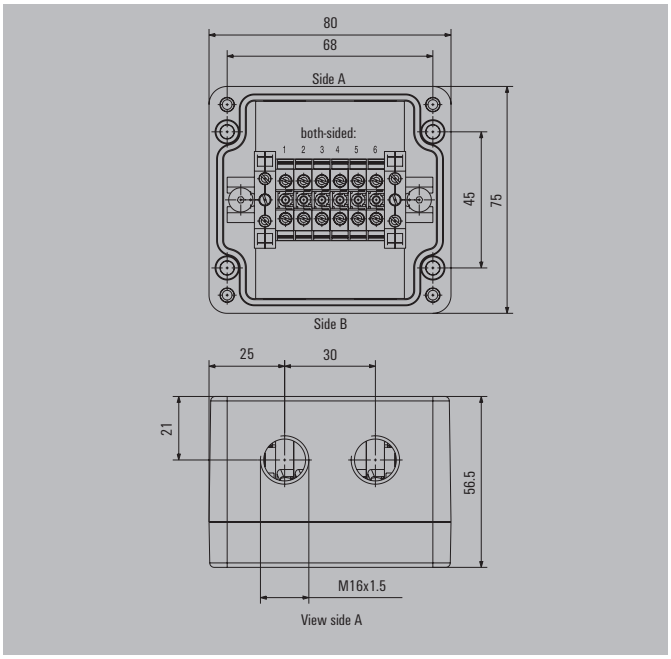

Accessories

Stopping plugs		Order No.
	KSPM M16 PL	1209890000
	VP M16-EXE MS	1737140000

Empty enclosure with tapped holes

	Drill holes side A	Drill holes side B	Order No.
	2 x M16x1.5	2 x M16x1.5	8000004160

Note Enclosures are delivered in RAL 7001.

Note You can find markers and labels in the Terminal Block Catalogue. Wall-mounted holders can be found in Chapter B under Klippon® POK

Terminal block, suitable for empty enclosure

	Type	Type of connection	Conductor can be clamped	Rated cross-section	No. of DU*	No. of PE*	Order No.
	BK 4/E	Screw connection	Solid / stranded Flexible / flexible with wire-end ferrule	0.5...4 mm² / 1.5...4 mm² 0.5...4 mm² / 0.5...4 mm²	4	0	8000004365
	AKZ 4	Screw connection	Solid / stranded Flexible / flexible with wire-end ferrule	0.5...6 mm² / 1.5...4 mm² 0.5...4 mm² / 0.5...2.5 mm²	6	2	8000004144

Note Markers numbered 1-50 (horizontal text) and mounting screws are included in the delivery.
*DU = feed-through terminals, PE = PE terminals

Distribution box with ATEX II 2GD T85°C Ex e II T6

Drill holes side A	Drill holes side B	No. of DU*	No. of PE*	Order No.
2 x M16x1.5	2 x M16x1.5	6	2	8000004223
2 x M16x1.5	2 x M16x1.5	4	0	8000004222

Note Enclosures are delivered in RAL 9011.
*DU = feed-through terminals, PE = PE terminals

Terminal rail / mounting plate set

	Product type	Type	Length	Order No.
	Mounting rail	TS15 68 Klippon POK1 CSS	68 mm	1928060000

Note Supplied with mounting screws for the mounting rail or mounting plate

Klippon® POK2

56 mm

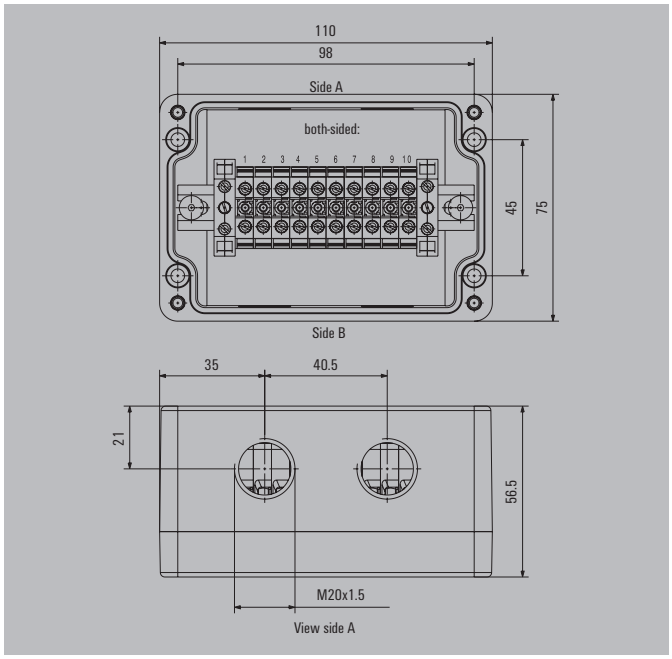

Height / Width / Depth	75 / 110 / 56 mm

Accessories

Cable glands		Order No.
	KSG M20 BN 0 NI 2 G20	1911560000
Stopping plugs		
	KSPM M20 PL	1209910000
	VP M20-EXE MS	1737150000
Adapters		
	ADAP EX M20-M16	1737560000

Empty enclosure with tapped holes

	Drill holes side A	Drill holes side B	Order No.
	2 x M20x1.5	2 x M20x1.5	8000004161

Note Enclosures are delivered in RAL 7001.

Note You can find markers and labels in the Terminal Block Catalogue. Wall-mounted holders can be found in Chapter B under Klippon® POK

Terminal block, suitable for empty enclosure

	Type	Type of connection	Conductor can be clamped	Rated cross-section	No. of DU*	No. of PE*	Order No.
	BK 6/E	Screw connection	Solid / stranded Flexible / flexible with wire-end ferrule	0.5...4 mm² / 1.5...4 mm² 0.5...4 mm² / 0.5...4 mm²	6	0	8000004366
	AKZ 4	Screw connection	Solid / stranded Flexible / flexible with wire-end ferrule	0.5...6 mm² / 1.5...4 mm² 0.5...4 mm² / 0.5...2.5 mm²	10	2	8000004145

Note Markers numbered 1-50 (horizontal text) and mounting screws are included in the delivery.
*DU = feed-through terminals, PE = PE terminals

Distribution box with ATEX II 2GD T85°C Ex e II T6

Drill holes side A	Drill holes side B	No. of DU*	No. of PE*	Order No.
2 x M20x1.5	2 x M20x1.5	10	2	8000004225
2 x M20x1.5	2 x M20x1.5	6	0	8000004224

Note Enclosures are delivered in RAL 9011.
*DU = feed-through terminals, PE = PE terminals

Terminal rail / mounting plate set

	Product type	Type	Length	Order No.
	Mounting rail	TS15 98 Klippon POK2 CSS	98 mm	1928070000

Note Supplied with mounting screws for the mounting rail or mounting plate

Klippon® POK3

56 mm

Height / Width / Depth	75 / 160 / 56 mm

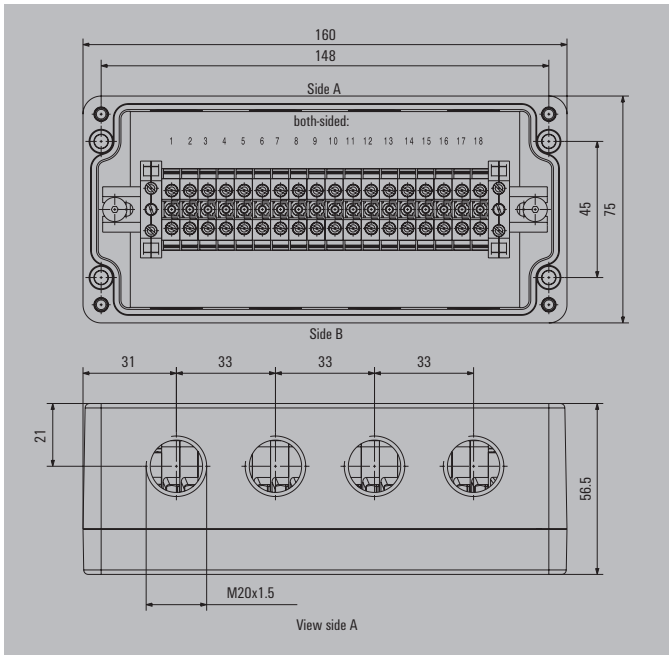

Accessories

Cable glands	Order No.
KSG M20 BN 0 NI 2 G20	1911560000
Stopping plugs	
KSPM M20 PL	1209910000
VP M20-EXE MS	1737150000
Adapters	
ADAP EX M20-M16	1737560000

Empty enclosure with tapped holes

Drill holes side A	Drill holes side B	Order No.
4 x M20x1.5	4 x M20x1.5	8000004162

Note Enclosures are delivered in RAL 7001.

Note You can find markers and labels in the Terminal Block Catalogue. Wall-mounted holders can be found in Chapter B under Klippon® POK

Terminal block, suitable for empty enclosure

Type	Type of connection	Conductor can be clamped	Rated cross-section	No. of DU*	No. of PE*	Order No.
BK 12/E	Screw connection	Solid / stranded Flexible / flexible with wire-end ferrule	0.5...4 mm² / 1.5...4 mm² 0.5...4 mm² / 0.5...4 mm²	12	0	8000004367
AKZ 4	Screw connection	Solid / stranded Flexible / flexible with wire-end ferrule	0.5...6 mm² / 1.5...4 mm² 0.5...4 mm² / 0.5...2.5 mm²	18	2	8000004146

Note Markers numbered 1-50 (horizontal text) and mounting screws are included in the delivery.
*DU = feed-through terminals, PE = PE terminals

Distribution box with ATEX II 2GD T85°C Ex e II T6

Drill holes side A	Drill holes side B	No. of DU*	No. of PE*	Order No.
4 x M20x1.5	4 x M20x1.5	18	2	8000004228
4 x M20x1.5	4 x M20x1.5	12	0	8000004226

Note Enclosures are delivered in RAL 9011.
*DU = feed-through terminals, PE = PE terminals

Terminal rail / mounting plate set

Product type	Type	Length	Order No.
Mounting rail	TS15 147 Klippon POK3 CSS	147 mm	1928080000

Note Supplied with mounting screws for the mounting rail or mounting plate

Klippon® POK4

91 mm

Height / Width / Depth	120 / 122 / 91 mm

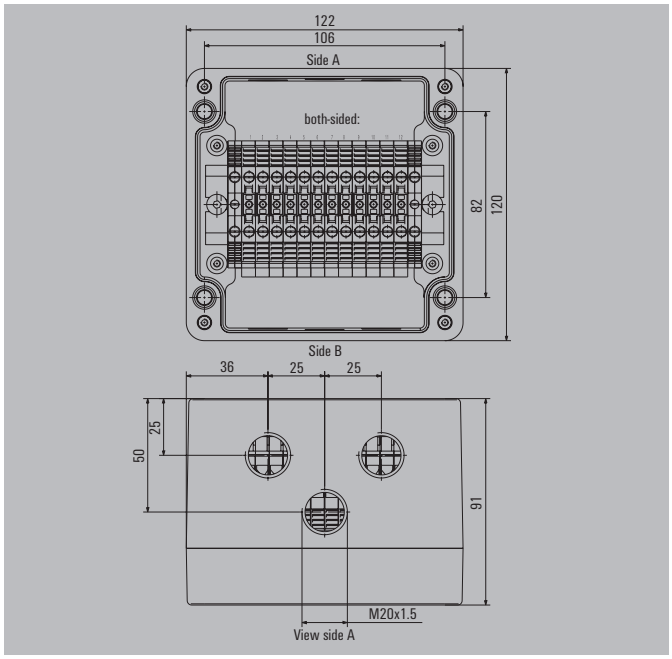

Accessories

Cable glands	Order No.
KSG M20 BN 0 NI 2 G20	1911560000
Stopping plugs	
KSPM M20 PL	1209910000
VP M20-EXE MS	1737150000
Adapters	
ADAP EX M20-M16	1737560000

Empty enclosure with tapped holes

Drill holes side A	Drill holes side B	Order No.
3 x M20x1.5	3 x M20x1.5	8000003448

Note Enclosures are delivered in RAL 7001.

Note You can find markers and labels in the Terminal Block Catalogue. Wall-mounted holders can be found in Chapter B under Klippon® POK

Terminal block, suitable for empty enclosure

Type	Type of connection	Conductor can be clamped	Rated cross-section	No. of DU*	No. of PE*	Order No.
ZDU 4-2/3AN	Tension clamp connection	Solid / stranded	0.5...6 mm² / ...	9	2	8000003445
		Flexible / flexible with wire-end ferrule	0.5...4 mm² / 0.5...4 mm²			
WDU 4	Screw connection	Solid / stranded	0.5...6 mm² / 1.5...6 mm²	12	2	8000003444
		Flexible / flexible with wire-end ferrule	0.5...6 mm² / 0.5...4 mm²			

Note Markers numbered 1-50 (horizontal text) and mounting screws are included in the delivery.
*DU = feed-through terminals, PE = PE terminals

Distribution box with ATEX II 2GD T85°C Ex e II T6

Drill holes side A	Drill holes side B	No. of DU*	No. of PE*	Order No.
3 x M20x1.5	3 x M20x1.5	12	2	8000003593
3 x M20x1.5	3 x M20x1.5	9	2	8000003594

Note Enclosures are delivered in RAL 9011.
*DU = feed-through terminals, PE = PE terminals

Terminal rail / mounting plate set

Product type	Type	Length	Order No.
Mounting rail	TS35 105 Klippon K41/POK4	105 mm	1910070000

Note Supplied with mounting screws for the mounting rail or mounting plate

Klippon® POK51

91 mm

Height / Width / Depth	160 / 160 / 91 mm

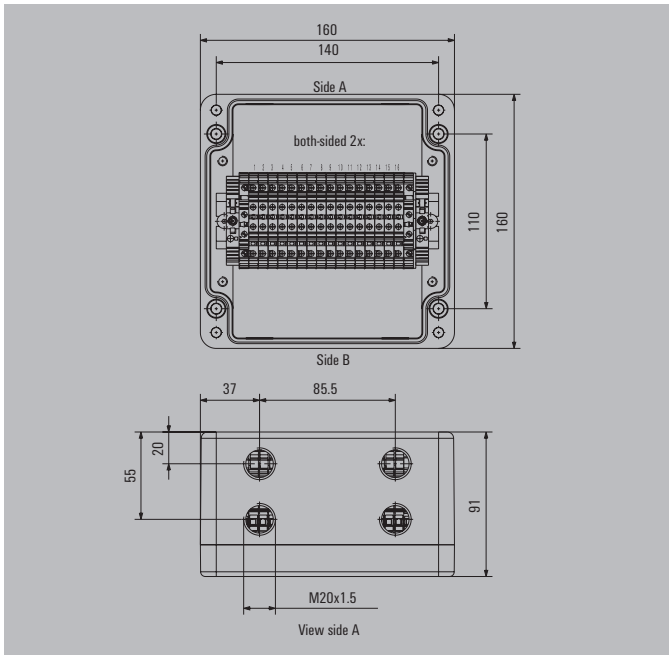

Accessories

Cable glands	Order No.
KSG M20 BN 0 NI 2 G20	1911560000
Stopping plugs	
KSPM M20 PL	1209910000
VP M20-EXE MS	1737150000
Adapters	
ADAP EX M20-M16	1737560000

Empty enclosure with tapped holes

Drill holes side A	Drill holes side B	Order No.
4 x M20x1.5	4 x M20x1.5	8000004164

Note Enclosures are delivered in RAL 7001. Space for further holes up to M40 is available.

Note You can find markers and labels in the Terminal Block Catalogue. Wall-mounted holders can be found in Chapter B under Klippon® POK

Terminal block, suitable for empty enclosure

Type	Type of connection	Conductor can be clamped	Rated cross-section	No. of DU*	No. of PE*	Order No.
ZDK 2.5	Tension clamp connection	Solid / stranded	0.5...2.5 mm² / ...	19	2	8000004143
		Flexible / flexible with wire-end ferrule	0.5...2.5 mm² / 0.5...2.5 mm²			
WDK 4N	Screw connection	Solid / stranded	0.5...6 mm² / 1.5...6 mm²	16	2	8000004142
		Flexible / flexible with wire-end ferrule	0.5...4 mm² / 0.5...4 mm²			

Note Markers numbered 1-50 (horizontal text) and mounting screws are included in the delivery.
*DU = feed-through terminals, PE = PE terminals

Distribution box with ATEX II 2GD T85°C Ex e II T6

Drill holes side A	Drill holes side B	No. of DU*	No. of PE*	Order No.
4 x M20x1.5	4 x M20x1.5	16	2	8000004229
4 x M20x1.5	4 x M20x1.5	19	2	8000004230

Note Enclosures are delivered in RAL 9011.
*DU = feed-through terminals, PE = PE terminals

Terminal rail / mounting plate set

Product type	Type	Length	Order No.
Mounting rail	TS35/140 Klippon K52 POK51	140 mm	1910100000

Note Supplied with mounting screws for the mounting rail or mounting plate

TBF – Large polyester enclosures

The enclosures in the TBF range are made from sturdy glass-fibre reinforced polyester. They offer a universal solution for protection of components such as controllers, measuring instruments, valves and other devices. Suitable applications include photovoltaics and energy distribution.

Key features of this product range range include:
- Available in 9 sizes, with grey or transparent lids
- The lid has nylon screws fitted
- Mounting holes are outside the sealed area
- Thread for fitting to terminal rails and mounting plates
- High Ingress Protection (IP 66 and IP 67)

Weidmüller can manufacture and supply this enclosure to match customer specifications and fitted with all necessary terminals and cable glands.

Overview of enclosures

Ordering data

Description	Dimensions in mm	Grey lid	Transparent lid
TBF 19/15	186 x 151 x 140	0360100000	0500500000
TBF 30/19	302 x 186 x 175	0360200000	0500600000
TBF 30/30	302 x 302 x 175	0360300000	0500700000
TBF 37/30	372 x 302 x 175	0360400000	0500800000
TBF 49/30	488 x 302 x175 / 210	9502800000	9502840000
TBF 56/30	558 x 302 x 175 / 210	9502810000	9502850000
TBF 60/30	603 x 302 x 175 / 210	0360500000	0500900000
TBF 60/37	603 x 372 x 175 / 210	9502820000	9502860000
TBF 60/60	603 x 603 x 175 / 210	9502830000	9502870000
Note			

Technical Overview

Features

- Extremely tough and impact resistant thanks to the glass-fibre reinforced polyester
- Extremely weather resistant
- High IP rating
- Approved according to the latest international standards (e.g. GOST)

Note We deliver enclosures through our assembly service which are ready to be connected and suitable for every application.

Technical data

	Grey lid	Transparent lid
Enclosure material	Base and lid made of glass-fibre reinforced polyester (GRP)	Base made of glass-fibre reinforced polyester (GRP) Lid is polycarbonate (PC)
Surface finish	grey, similar to RAL 7035	
IP protection class	IP 67	IP 66
Installation mounting	4 or 6 M4 clamping screws	4 or 6 M4 clamping screws
Enclosure mounting	4 holes of 7 mm diameter or with external fastening lugs, see accessories	4 holes of 7 mm diameter or with external fastening lugs, see accessories
Lid fixing	4 or 6 captive cross-headed nylon screws	4 or 6 captive cross-headed nylon screws
Impact resistance	4 J	7 J
Gasket material	Polyurethane	Polyurethane
Temperature range	-50 °C...+150 °C	-50 °C...+130 °C
Flammability characteristics	UL 94 HB	V2
Toxicity	Free from halogens	Free from halogens
Note		

	TBF 19/15	140 mm	TBF 30/19	175 mm
	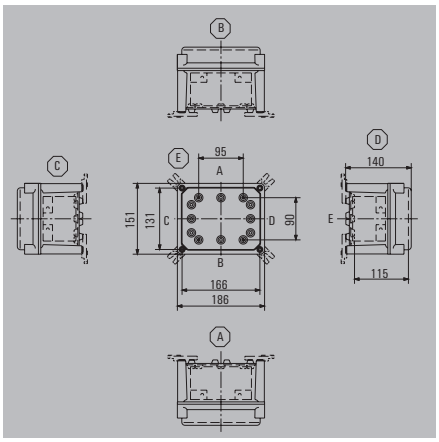		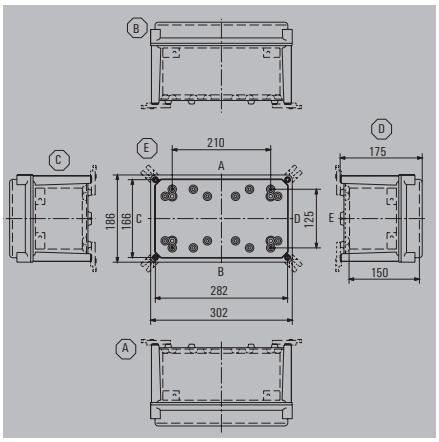	
Height / Width / Depth	186 / 151 / 140 mm		302 / 186 / 175 mm	

Technical data

Assembly with terminal	vertical	horizontal	vertical	horizontal
2.5 mm²	1x11	1x18	2x22	1x44
4 mm²	1x9	1x15	2x18	1x37
6 mm²	1x7	1x7	2x14	2x14
10 mm²	1x6	1x9	2x11	1x22
16 mm²	1x4	1x6	2x8	1x16
35 mm²	1x3	1x5	2x7	1x14
Number of cable entries	**A / B**	**C / D**	**A / B**	**C / D**
M12	11	11	28	53
M16	6	6	14	30
M20	2	2	11	22
M25	2	2	6	10
M32	1	1	3	5
M40	1	1	3	3
M50			1	3
M63			1	2
M75				
Note				

Ordering data

	Type	Qty.	Order No.	Type	Qty.	Order No.
Enclosure with grey lid	TBF 19/15/14 7035	1	0360100000	TBF 30/19/18 7035	1	0360200000
Enclosure with transparent lid	TBF 19/15/14 trsp	1	0500500000	TBF 30/19/18 trsp	1	0500600000
Note						

Accessories

	Type	Qty.	Order No.	Type	Qty.	Order No.
Mounting plates and fastening screws						
Steel sheet, zinc plated	MP TBF 19/15	1	9502720000	MP TBF 30/19	1	3018950000
External mounting lug, set of 4						
Polyamide	MF TBF	1	0360800000	MF TBF	1	0360800000
Earthing stud						
M6, Brass	ES TBF M6 brass	1	9502700000	ES TBF M6 brass	1	9502700000
M6, Stainless steal	ES TBF M6 ss	1	9505240000	ES TBF M6 ss	1	9505240000
M10, Brass	ES TBF M10 brass	1	9502710000	ES TBF M10 brass	1	9502710000
M10, Stainless steal	ES TBF M10 ss	1	9500870000	ES TBF M10 ss	1	9500870000
Expansion frame						
Polyamide	EF TBF 19/15	1	9502930000			
Note	If using an extension frame, the protection class (IP) is reduced.					

	TBF 30/30	175 mm	TBF 37/30	175 mm

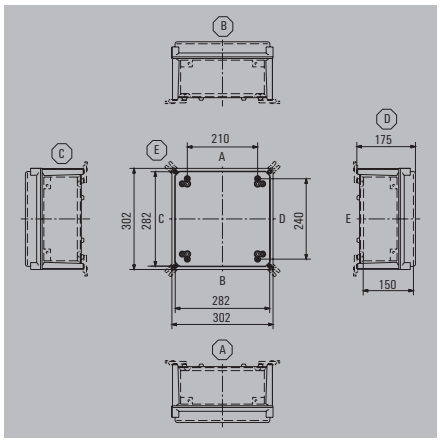

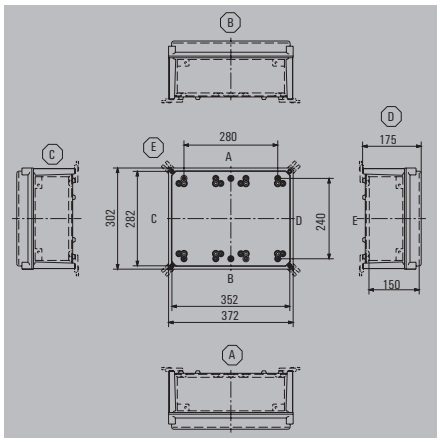

Height / Width / Depth	302 / 302 / 175 mm	372 / 302 / 175 mm

Technical data

Assembly with terminal	vertical	horizontal	vertical	horizontal
2.5 mm²	2x44	1x44	2x57	2x44
4 mm²	2x37	1x37	2x48	2x37
6 mm²	2x28	2x28	2x36	2x36
10 mm²	2x22	1x22	2x29	2x22
16 mm²	2x16	1x16	2x21	2x16
35 mm²	2x14	1x14	2x18	2x14
Number of cable entries	**A / B**	**C / D**	**A / B**	**C / D**
M12	44	44	44	56
M16	24	24	24	30
M20	20	20	20	27
M25	10	10	10	12
M32	4	4	4	5
M40	3	3	3	4
M50	3	3	3	4
M63	2	2	2	3
M75				
Note				

Ordering data

	Type	Qty.	Order No.	Type	Qty.	Order No.
Enclosure with grey lid	TBF 30/30/18 7035	1	0360300000	TBF 37/30/18 7035	1	0360400000
Enclosure with transparent lid	TBF 30/30/18 trsp	1	0500700000	TBF 37/30/18 trsp	1	0500800000
Note						

Accessories

	Type	Qty.	Order No.	Type	Qty.	Order No.
Mounting plates and fastening screws						
Steel sheet, zinc plated	MP TBF 30/30	1	9502730000	MP TBF 37/30	1	9502740000
External mounting lug, set of 4						
Polyamide	MF TBF	1	0360800000	MF TBF	1	0360800000
Earthing stud						
M6, Brass	ES TBF M6 brass	1	9502700000	ES TBF M6 brass	1	9502700000
M6, Stainless steal	ES TBF M6 ss	1	9505240000	ES TBF M6 ss	1	9505240000
M10, Brass	ES TBF M10 brass	1	9502710000	ES TBF M10 brass	1	9502710000
M10, Stainless steal	ES TBF M10 ss	1	9500870000	ES TBF M10 ss	1	9500870000
Expansion frame						
Polyamide	EF TBF 30/30	1	9502950000	EF TBF 37/30	1	9502960000
Note	If using an extension frame, the protection class (IP) is reduced.			If using an extension frame, the protection class (IP) is reduced.		

	TBF 49/30	175 mm	TBF 56/30	175 mm

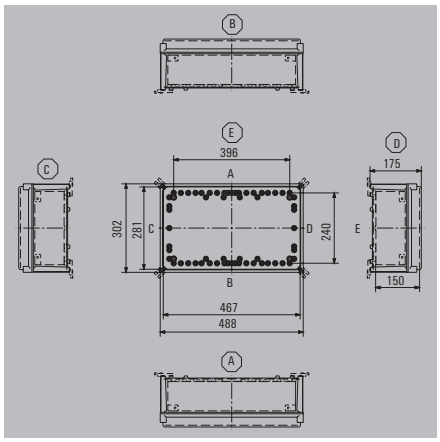

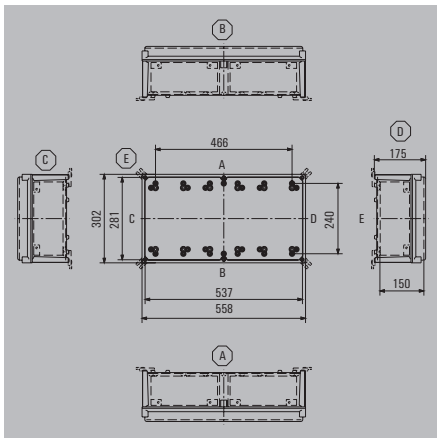

Height / Width / Depth	488 / 302 / 210 mm	558 / 302 / 210 mm

Technical data

Assembly with terminal	vertical	horizontal	vertical	horizontal
2.5 mm²	2x80	3x44	2x94	4x44
4 mm²	2x67	3x37	2x79	4x37
6 mm²	2x51	2x51	2x59	2x59
10 mm²	2x41	3x22	2x48	4x22
16 mm²	2x29	3x16	2x34	4x16
35 mm²	2x25	3x14	2x30	4x14
Number of cable entries	**A / B**	**C / D**	**A / B**	**C / D**
M12	44	42	44	80
M16	24	42	24	46
M20	20	36	20	40
M25	10	18	10	18
M32	4	7	4	8
M40	3	5	3	6
M50	3	5	3	4
M63	2	4	2	4
M75				
Note				

Ordering data

	Type	Qty.	Order No.	Type	Qty.	Order No.
Enclosure with grey lid	TBF 49/30/18 7035	1	9502800000	TBF 56/30/18 7035	1	9502810000
Enclosure with transparent lid	TBF 49/30/21 trsp	1	9502840000	TBF 56/30/21 trsp	1	9502850000
Note	Grey lid: 130 mm internal height, 175 mm total height Transparent lid: 160 mm internal height, 210 mm total height			Grey lid: 130 mm internal height, 175 mm total height Transparent lid: 160 mm internal height, 210 mm total height		

Accessories

Mounting plates and fastening screws	Type	Qty.	Order No.	Type	Qty.	Order No.
Steel sheet, zinc plated	MP TBF 49/30	1	9500960000	MP TBF 56/30	1	9500950000
External mounting lug, set of 4						
Polyamide	MF TBF	1	0360800000	MF TBF	1	0360800000
Earthing stud						
M6, Brass	ES TBF M6 brass	1	9502700000	ES TBF M6 brass	1	9502700000
M6, Stainless steal	ES TBF M6 ss	1	9505240000	ES TBF M6 ss	1	9505240000
M10, Brass	ES TBF M10 brass	1	9502710000	ES TBF M10 brass	1	9502710000
M10, Stainless steal	ES TBF M10 ss	1	9500870000	ES TBF M10 ss	1	9500870000
Note						

TBF 60/30 — 175 mm

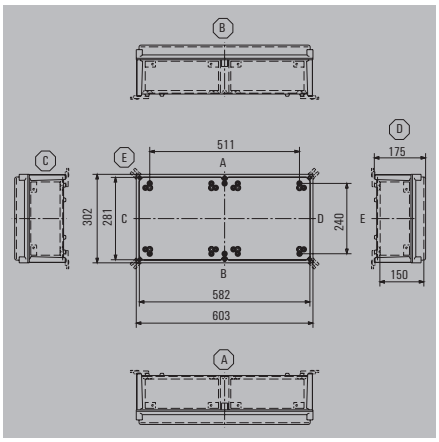

Height / Width / Depth	603 / 302 / 210 mm

Technical data

Assembly with terminal	vertical	horizontal
2.5 mm²	5x44	1x101
4 mm²	5x37	1x85
6 mm²	5x28	5x28
10 mm²	5x22	1x51
16 mm²	5x16	1x37
35 mm²	5x14	1x32
Number of cable entries	**A / B**	**C / D**
M12	44	88
M16	24	48
M20	20	40
M25	10	20
M32	4	8
M40	3	6
M50	3	6
M63	2	4
M75		
Note		

Ordering data

	Type	Order No.
Enclosure with grey lid	TBF 60/30/18 7035	0360500000
Enclosure with transparent lid	TBF 60/30/21 trsp	0500900000
Note	Grey lid: 130 mm internal height, 175 mm total height Transparent lid: 160 mm internal height, 210 mm total height	

Accessories

	Type	Qty.	Order No.
Mounting plates and fastening screws			
Steel sheet, zinc plated	MP TBF 60/30	1	9502750000
External mounting lug, set of 4			
Polyamide	MF TBF	1	0360800000
Earthing stud			
M6, Brass	ES TBF M6 brass	1	9502700000
M6, Stainless steal	ES TBF M6 ss	1	9505240000
M10, Brass	ES TBF M10 brass	1	9502710000
M10, Stainless steal	ES TBF M10 ss	1	9500870000
Expansion frame			
Polyamide	EF TBF 60/30	1	9502990000
Note	If using an extension frame, the protection class (IP) is reduced.		

TBF - Polyester enclosures

	TBF 60/37 175 mm	TBF 60/60 175 mm
	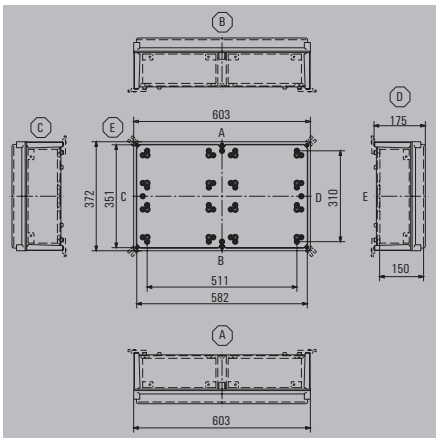	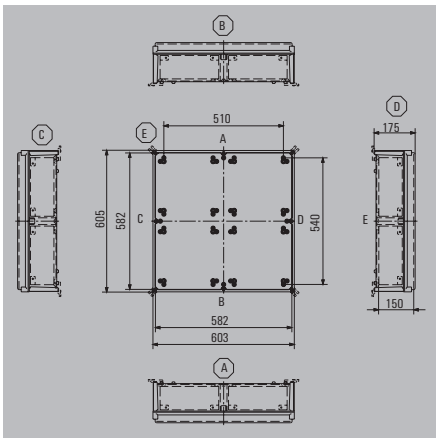
Height / Width / Depth	603 / 372 / 210 mm	603 / 605 / 210 mm

Technical data

Assembly with terminal	vertical	horizontal	vertical	horizontal
2.5 mm²	5x57	2x101	5x101	4x101
4 mm²	5x48	2x85	5x85	4x85
6 mm²	5x36	5x36	5x64	5x64
10 mm²	5x29	2x51	5x51	4x51
16 mm²	5x21	2x37	5x37	4x37
35 mm²	5x18	2x32	5x32	4x32
Number of cable entries	**A / B**	**C / D**	**A / B**	**C / D**
M12	52	88	88	88
M16	30	48	48	48
M20	26	40	40	40
M25	12	20	20	20
M32	5	8	8	8
M40	4	6	6	6
M50	4	6	6	6
M63	3	4	4	4
M75				
Note				

Ordering data

	Type	Qty.	Order No.	Type	Qty.	Order No.
Enclosure with grey lid	TBF 60/37/18 7035	1	9502820000	TBF 60/60/18 7035	1	9502830000
Enclosure with transparent lid	TBF 60/37/21 trsp	1	9502860000	TBF 60/60/21 trsp	1	9502870000
Note	Grey lid: 130 mm internal height, 175 mm total height Transparent lid: 160 mm internal height, 210 mm total height			Grey lid: 130 mm internal height, 175 mm total height Transparent lid: 160 mm internal height, 210 mm total height		

Accessories

	Type	Qty.	Order No.	Type	Qty.	Order No.
Mounting plates and fastening screws						
Steel sheet, zinc plated	MP TBF 60/37	1	9502910000	MP TBF 60/60	1	9502920000
External mounting lug, set of 4						
Polyamide	MF TBF	1	0360800000	MF TBF	1	0360800000
Earthing stud						
M6, Brass	ES TBF M6 brass	1	9502700000	ES TBF M6 brass	1	9502700000
M6, Stainless steal	ES TBF M6 ss	1	9505240000	ES TBF M6 ss	1	9505240000
M10, Brass	ES TBF M10 brass	1	9502710000	ES TBF M10 brass	1	9502710000
M10, Stainless steal	ES TBF M10 ss	1	9500870000	ES TBF M10 ss	1	9500870000
Expansion frame						
Polyamide	EF TBF 60/37	1	9503000000	EF TBF 60/60	1	9503010000
Note	If using an extension frame, the protection class (IP) is reduced.			If using an extension frame, the protection class (IP) is reduced.		

MPC – Small polycarbonate enclosures

The polycarbonate enclosures of the MPC range are ideal for enclosing electrical, electro-mechanical and pneumatic devices as well as PCBs. The enclosures are used in situations with extreme mechanical and chemical conditions.

The characteristics of the enclosures are:
- Available in 17 sizes, with grey or transparent lids
- Lid fixing screws equipped with sealing holes
- Fixing holes outside the sealed area
- Thread for fitting to terminal rails, mounting plates and PCBs

Weidmüller can manufacture and supply this enclosure to match customer specifications and fitted with all necessary terminals and cable glands.

Overview of enclosures

Ordering data

Description	Dimensions in mm	Grey lid	Transparent lid
MPC 07/12/07	75 x 125 x 75	9535170000	9535180000
MPC 07/12/10	75 x 125 x 100	9535190000	9535200000
MPC 07/12/12	75 x 125 x 120	9535210000	9535220000
MPC 12/12/07	120 x 120 x 75	9535230000	9535240000
MPC 12/12/10	120 x 120 x 100	9535250000	9535260000
MPC 12/12/12	120 x 120 x 120	9535270000	9535280000
MPC 12/17/07	120 x 175 x 75	9535290000	9535300000
MPC 12/17/10	120 x 175 x 100	9535310000	9535320000
MPC 12/17/12	120 x 175 x 120	9535330000	9535340000
MPC 12/17/15	120 x 175 x 150	9535350000	9535360000
MPC 17/17/07	175 x 175 x 75	9535370000	9535380000
MPC 17/17/10	175 x 175 x 100	9535390000	9535400000
MPC 17/17/12	175 x 175 x 120	9535410000	
MPC 17/17/15	175 x 175 x 150	9535430000	9535440000
MPC 17/25/10	175 x 250 x 100	9535450000	
MPC 18/25/07	180 x 250 x 75	9535470000	9535480000
MPC 18/25/15	180 x 250 x150	9535490000	9535500000
Note			

Technical Overview

Features

• High thermal stability thanks to the polycarbonate
• Extremely tough and impact resistant thanks to the high fibre-glass content.
• Good IP rating, due to use of polyurethane (PUR) gasket material
• Approved according to the latest international standards

Note	We deliver enclosures through our assembly service which are ready to be connected and suitable for every application.

Technical data

Enclosure material	Polycarbonate
Cover	Grey or transparent
Surface finish	Grey, similar to RAL 7035
IP protection class	IP 66, IP 67
Installation mounting	Self-tapping screws
Enclosure mounting	4 holes (4.5 mm diameter) or external mounting brackets (optional)
Lid fixing	4 cross-head screws (polyamide)
Gasket material	Polyurethane foam
Temperature range	-50 °C...+130 °C
Note	

	MPC 07/12/07	75 mm	MPC 07/12/12	125 mm
	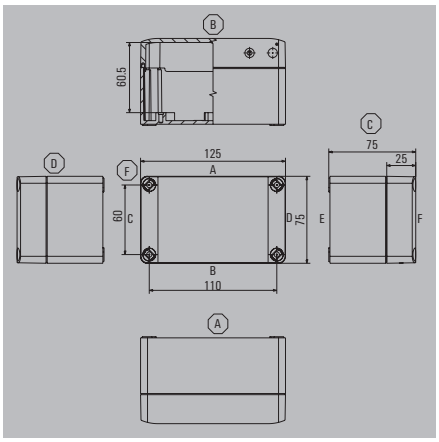		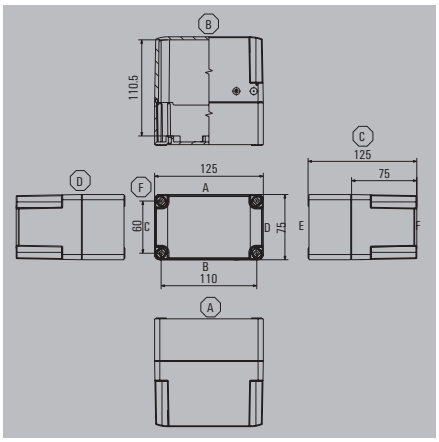	
Height / Width / Depth	125 / 75 / 75 mm		125 / 75 / 125 mm	

Technical data

Assembly with terminal	vertical	horizontal	vertical	horizontal
2.5 mm²	1x13	1x13	1x13	1x13
4 mm²	1x11	1x11	1x11	1x11
6 mm²	1x8	1x8	1x8	1x8
10 mm²	1x6	1x6	1x6	1x6
16 mm²			1x5	1x1
35 mm²			1x4	1x1
Number of cable entries	**A / B**	**C / D**	**A / B**	**C / D**
M12	1	4	1	4
M16	1	3	1	3
M20	1	3	1	3
M25				
M32				
M40				
M50				
M63				
M75				
Note	It is possible to mount the WDU terminal blocks on a TS 35.		It is possible to mount the WDU terminal blocks on a TS 35.	

Ordering data

	Type	Qty.	Order No.	Type	Qty.	Order No.
Enclosure with grey lid	MPC 07/12/07 7035	1	9535170000	MPC 07/12/12 7035	1	9535210000
Enclosure with transparent lid	MPC 07/12/07 trsp	1	9535180000	MPC 07/12/12 trsp	1	9535220000
Note						

Accessories

	Type	Qty.	Order No.	Type	Qty.	Order No.
Mounting plate						
Steel sheet, zinc plated	MP MPC 07/12	10	9535540000	MP MPC 07/12	10	9535540000
External mounting lug, set of 4	MF MPC	1	9535600000	MF MPC	1	9535600000
Hinge, set of 2	HG MPC	1	9535590000	HG MPC	1	9535590000
Note						

	MPC 12/12/07	75 mm	MPC 12/17/07	75 mm

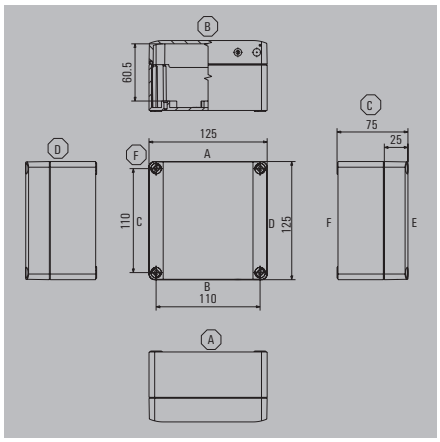

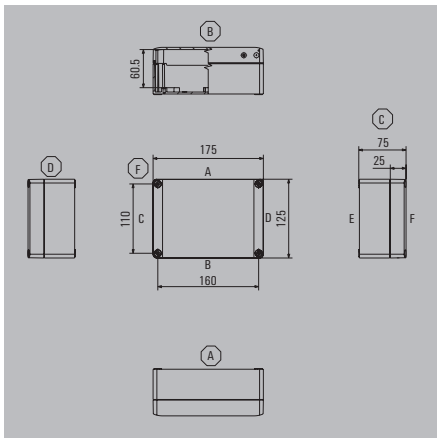

Height / Width / Depth	125 / 125 / 75 mm	175 / 125 / 75 mm

Technical data

Assembly with terminal	vertical	horizontal	vertical	horizontal
2.5 mm²	1x13	1x13	1x22	1x22
4 mm²	1x11	1x11	1x19	1x19
6 mm²	1x8	1x8	1x14	1x14
10 mm²	1x6	1x6	1x11	1x11
16 mm²				
35 mm²				
Number of cable entries	**A / B**	**C / D**	**A / B**	**C / D**
M12	4	4	4	6
M16	3	3	3	4
M20	3		3	4
M25				
M32				
M40				
M50				
M63				
M75				
Note	It is possible to mount the WDU terminal blocks on a TS 35.		It is possible to mount the WDU terminal blocks on a TS 35.	

Ordering data

	Type	Qty.	Order No.	Type	Qty.	Order No.
Enclosure with grey lid	MPC 12/12/07 7035	1	9535230000	MPC 12/17/07 7035	1	9535290000
Enclosure with transparent lid	MPC 12/12/07 trsp	1	9535240000	MPC 12/17/07 trsp	1	9535300000
Note						

Accessories

	Type	Qty.	Order No.	Type	Qty.	Order No.
Mounting plate						
Steel sheet, zinc plated	MP MPC 12/12	10	9535550000	MP MPC 12/17	10	9535560000
External mounting lug, set of 4						
	MF MPC	1	9535600000	MF MPC	1	9535600000
Hinge, set of 2						
	HG MPC	1	9535590000	HG MPC	1	9535590000
Note						

MPC - Polycarbonate enclosures

	MPC 12/17/10 — 100 mm	MPC 12/17/12 — 125 mm
	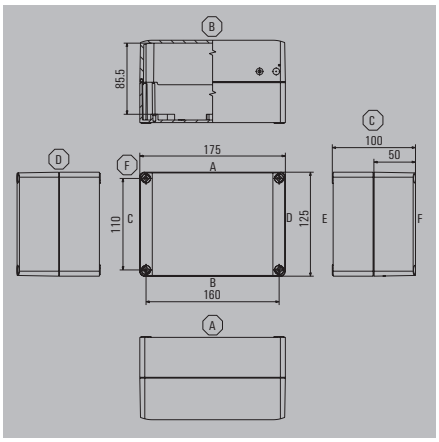	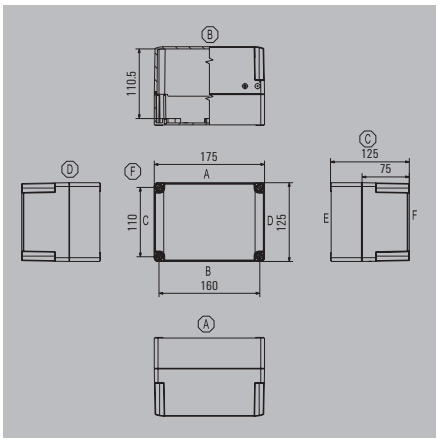
Height / Width / Depth	175 / 125 / 100 mm	175 / 125 / 125 mm

Technical data

Assembly with terminal	vertical	horizontal	vertical	horizontal
2.5 mm²	1x22	1x22	1x13	1x22
4 mm²	1x19	1x19	1x11	1x19
6 mm²	1x14	1x14	1x8	1x8
10 mm²	1x11	1x11	1x6	1x11
16 mm²	1x9	1x5	1x5	1x5
35 mm²	1x7	1x4	1x4	1x4
Number of cable entries	**A / B**	**C / D**	**A / B**	**C / D**
M12	4	6	4	6
M16	3	4	3	4
M20	3	4	3	4
M25				
M32				
M40				
M50				
M63				
M75				
Note	It is possible to mount the WDU terminal blocks on a TS 35.		It is possible to mount the WDU terminal blocks on a TS 35.	

Ordering data

	Type	Qty.	Order No.	Type	Qty.	Order No.
Enclosure with grey lid	MPC 12/17/10 7035	1	9535310000	MPC 12/17/12 7035	1	9535330000
Enclosure with transparent lid	MPC 12/17/10 trsp	1	9535320000	MPC 12/17/12 trsp	1	9535340000
Note						

Accessories

	Type	Qty.	Order No.	Type	Qty.	Order No.
Mounting plate						
Steel sheet, zinc plated	MP MPC 12/17	10	9535560000	MP MPC 12/17	10	9535560000
External mounting lug, set of 4						
	MF MPC	1	9535600000	MF MPC	1	9535600000
Hinge, set of 2						
	HG MPC	1	9535590000	HG MPC	1	9535590000
Note						

MPC 17/17/07 — 75 mm

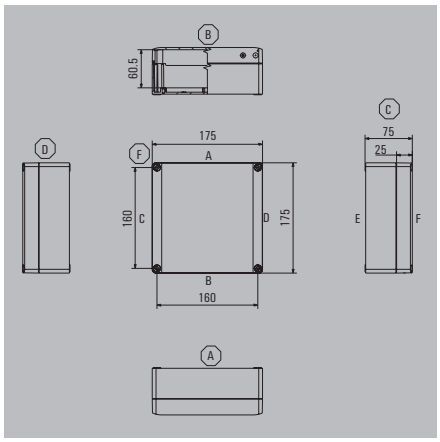

Height / Width / Depth	175 / 175 / 75 mm

Technical data

Assembly with terminal	vertical	horizontal
2.5 mm²	1x22	1x22
4 mm²	1x19	1x19
6 mm²	1x14	1x14
10 mm²	1x11	1x11
16 mm²		
35 mm²		

Number of cable entries	A / B	C / D
M12	6	6
M16	4	4
M20	4	
M25		
M32		
M40		
M50		
M63		
M75		

Note	It is possible to mount the WDU terminal blocks on a TS 35.

Ordering data

	Type	Qty.	Order No.
Enclosure with grey lid	MPC 17/17/07 7035	1	9535370000
Enclosure with transparent lid	MPC 17/17/07 trsp	1	9535380000

Note

Accessories

Mounting plate	Type	Qty.	Order No.
Steel sheet, zinc plated	MP MPC 17/17	10	9535570000

External mounting lug, set of 4			
	MF MPC	1	9535600000

Hinge, set of 2			
	HG MPC	1	9535590000

Note

MPC - Polycarbonate enclosures

	MPC 17/17/15 — 150 mm	MPC 17/25/10 — 100 mm
	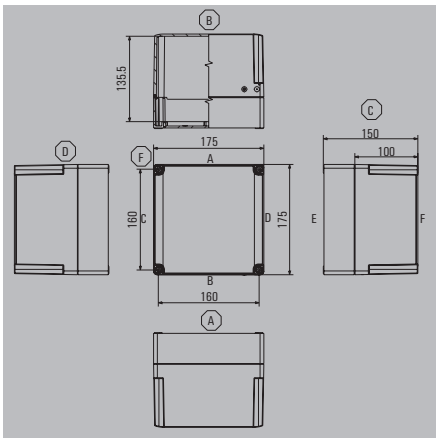	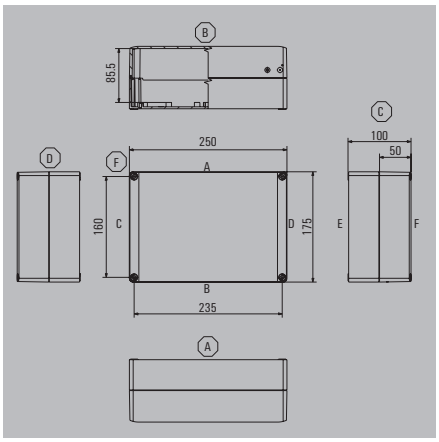
Height / Width / Depth	175 / 175 / 150 mm	250 / 175 / 100 mm

Technical data

Assembly with terminal	vertical	horizontal	vertical	horizontal
2.5 mm²	1x22	1x22	1x37	1x37
4 mm²	1x19	1x19	1x31	1x31
6 mm²	1x14	1x14	1x23	1x23
10 mm²	1x11	1x11	1x19	1x19
16 mm²	1x9	1x9	1x15	1x9
35 mm²	1x7	1x7	1x11	1x7
Number of cable entries	**A / B**	**C / D**	**A / B**	**C / D**
M12	6	6	6	9
M16	4	4	4	7
M20	4		4	6
M25				
M32				
M40				
M50				
M63				
M75				
Note	It is possible to mount the WDU terminal blocks on a TS 35.		It is possible to mount the WDU terminal blocks on a TS 35.	

Ordering data

	Type	Qty.	Order No.	Type	Qty.	Order No.
Enclosure with grey lid	MPC 17/17/15 7035	1	9535430000	MPC 17/25/10 7035	1	9535470000
Enclosure with transparent lid	MPC 17/17/15 trsp	4	9535440000	MPC 17/25/10 trsp	1	9535480000
Note						

Accessories

	Type	Qty.	Order No.	Type	Qty.	Order No.
Mounting plate						
Steel sheet, zinc plated	MP MPC 17/17	10	9535570000	MP MPC 17/25	1	9535580000
External mounting lug, set of 4	MF MPC	1	9535600000	MF MPC	1	9535600000
Hinge, set of 2	HG MPC	1	9535590000	HG MPC	1	9535590000
Note						

FPC – Medium-sized polycarbonate enclosures

The FPC enclosure range is the next generation of the MPC range. The enclosures have the same technical characteristics and are ideal for enclosing electrical, electro-mechanical and pneumatic devices and PCBs. The enclosures are used in situations where extreme mechanical and chemical conditions exist.

The characteristics of the enclosures are:
- Available in 6 sizes, with grey or transparent lids
- Lid fixing screws equipped with sealing holes
- Fixing holes outside the sealed area
- Thread for fitting to terminal rails, mounting plates and PCBs

Weidmüller can manufacture and supply this enclosure to match customer specifications and fitted with all necessary terminals and cable glands.

Overview of enclosures

Ordering data

Description	Dimensions in mm	Grey lid	Transparent lid
FPC 20/20/13	200 x 200 x 130	9535690000	9535680000
FPC 20/30/13	300 x 200 x 130	9535710000	9535700000
FPC 20/40/13	400 x 200 x 130	9535730000	9535720000
FPC 30/30/13	300 x 300 x 130	9535750000	9535740000
FPC 30/40/13	400 x 300 x 130	9535770000	9535760000
FPC 40/60/13	600 x 400 x 130	9535810000	9535820000
Note			

Technical data

Enclosure material	Polycarbonate
Cover	Grey or transparent
Surface finish	Grey, similar to RAL 7035
IP protection class	IP 66, IP 67
Installation mounting	Self-tapping screws
Enclosure mounting	4 holes (7.5 mm diameter) or external mounting brackets (optional)
Lid fixing	4 cross-head screws (polyamide)
Gasket material	Polyurethane foam
Temperature range	-50 °C...+130 °C
Note	

	FPC 20/20/13	132 mm	FPC 20/30/13	132 mm
	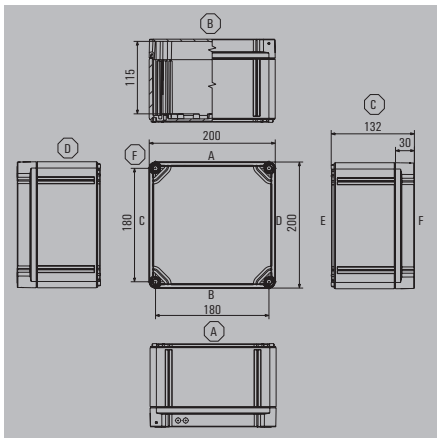		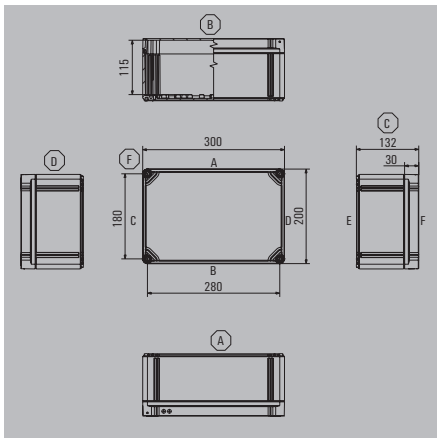	
Height / Width / Depth	200 / 200 / 132 mm		200 / 300 / 132 mm	

Technical data

Assembly with terminal	vertical	horizontal	vertical	horizontal
2.5 mm²	1x17	1x17	2x20	1x40
4 mm²	1x14	1x14	2x17	1x33
6 mm²	1x10	1x10	2x13	2x13
10 mm²	1x8	1x8	2x10	1x20
16 mm²	1x7	1x7	2x8	1x17
35 mm²	1x5	1x5	2x6	1x12
Number of cable entries	**A / B**	**C / D**	**A / B**	**C / D**
M12	20	20	38	20
M16	11	11	21	11
M20	6	6	12	6
M25	4	4	8	4
M32	2	2	3	2
M40	1	1	3	1
M50	1	1	2	1
M63	1	1	2	1
M75				
Note				

Ordering data

	Type	Qty.	Order No.	Type	Qty.	Order No.
Enclosure with grey lid	FPC 20/20/13 7035	1	9535690000	FPC 20/30/13 7035	1	9535710000
Enclosure with transparent lid	FPC 20/20/13 trsp	1	9535680000	FPC 20/30/13 trsp	1	9535700000
Note						

Accessories

	Type	Qty.	Order No.	Type	Qty.	Order No.
Mounting plate						
Steel sheet, zinc plated	MP FPC 20/20	1	9535920000	MP FPC 20/30	1	9535930000
External mounting lug, set of 4	MF FPC	1	9536040000	MF FPC	1	9536040000
Hinge, set of 2	HG FPC	1	9535990000	HG FPC	1	9535990000
Note						

FPC - Polycarbonate enclosures

	FPC 20/40/13	132 mm	FPC 30/30/13	132 mm
	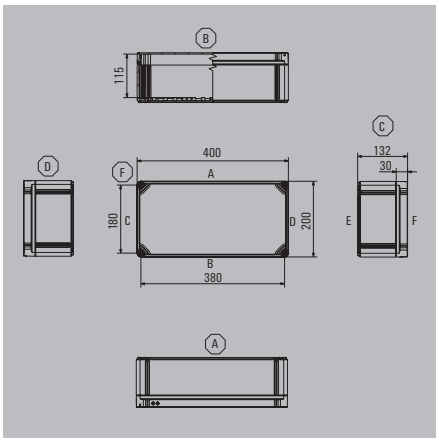		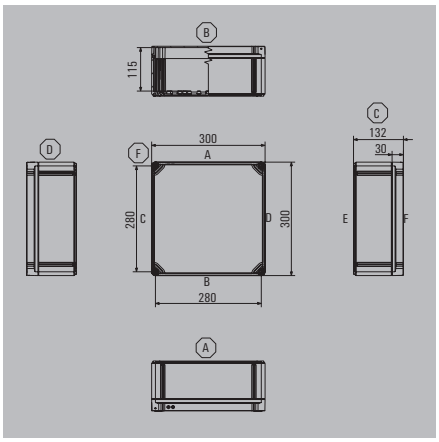	
Height / Width / Depth	200 / 400 / 132 mm		300 / 300 / 132 mm	

Technical data

Assembly with terminal	vertical	horizontal	vertical	horizontal
2.5 mm²	3x20	1x59	2x40	1x40
4 mm²	3x17	1x49	2x33	1x33
6 mm²	3x13	3x13	2x25	2x25
10 mm²	3x10	1x30	2x20	1x20
16 mm²	3x8	1x25	2x17	1x17
35 mm²	3x6	1x19	2x12	1x12
Number of cable entries	**A / B**	**C / D**	**A / B**	**C / D**
M12	56	20	38	38
M16	30	11	21	21
M20	18	6	12	12
M25	12	4	8	8
M32	5	2	3	3
M40	4	1	3	3
M50	4	1	2	2
M63	3	1	2	2
M75				
Note				

Ordering data

	Type	Qty.	Order No.	Type	Qty.	Order No.
Enclosure with grey lid	FPC 20/40/13 7035	1	9535730000	FPC 30/30/13 7035	1	9535750000
Enclosure with transparent lid	FPC 20/40/13 trsp	1	9535720000	FPC 30/30/13 trsp	1	9535740000
Note						

Accessories

	Type	Qty.	Order No.	Type	Qty.	Order No.
Mounting plate						
Steel sheet, zinc plated	MP FPC 20/40	1	9535940000	MP FPC 30/30	1	9535950000
External mounting lug, set of 4	MF FPC	1	9536040000	MF FPC	1	9536040000
Hinge, set of 2	HG FPC	1	9535990000	HG FPC	1	9535990000
Note						

	FPC 30/40/13	132 mm	FPC 40/60/13	132 mm

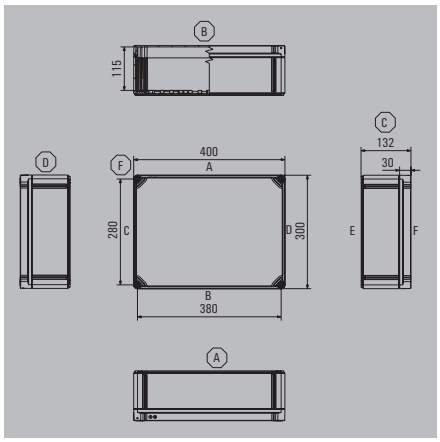

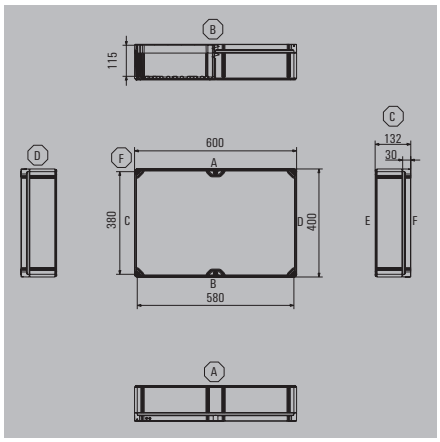

Height / Width / Depth	300 / 400 / 132 mm	400 / 600 / 132 mm

Technical data

Assembly with terminal	vertical	horizontal	vertical	horizontal
2.5 mm²	3x40	1x59	5x59	2x97
4 mm²	3x33	1x49	5x49	2x81
6 mm²	3x25	3x25	5x37	5x37
10 mm²	3x20	1x30	5x30	2x49
16 mm²	3x17	1x25	5x25	2x41
35 mm²	3x12	1x19	5x19	2x31
Number of cable entries	**A / B**	**C / D**	**A / B**	**C / D**
M12	56	38	76	56
M16	30	21	42	30
M20	18	12	24	18
M25	12	8	16	12
M32	5	3	6	5
M40	4	3	6	4
M50	4	2	4	4
M63	3	2	4	3
M75				
Note				

Ordering data

	Type	Qty.	Order No.	Type	Qty.	Order No.
Enclosure with grey lid	FPC 30/40/13 7035	1	9535770000	FPC 40/60/13 7035	1	9535810000
Enclosure with transparent lid	FPC 30/40/13 trsp	1	9535760000	FPC 40/60/13 trsp	1	9535820000
Note						

Accessories

	Type	Qty.	Order No.	Type	Qty.	Order No.
Mounting plate						
Steel sheet, zinc plated	MP FPC 30/40	1	9535960000	MP FPC 40/60	1	9535980000
External mounting lug, set of 4	MF FPC	1	9536040000	MF FPC	1	9536040000
Hinge, set of 2	HG FPC	1	9535990000	HG FPC	1	9535990000
Note						

Cable entries

Cable entries	Introduction	C.2
	Standard cable glands – Plastic	C.6
	Standard cable glands – Brass	C.9
	EMC cable glands	C.15
	Standard cable glands – Stainless steel	C.17
	Klippon® Cable Glands	C.19
	Accessories – Lock nuts	C.46
	Accessories – Flat IP washer	C.51
	Accessories – Earthing rings	C.55
	Accessories – Shrouds	C.57
	Accessories – Washers	C.59
	Sealing plugs	C.60
	Adaptors	C.67
	Compensating elements	C.69

Cable entries

Weidmüller offers a variety of add-on components for a multitude of applications; complementing its wide range of enclosure products.
In addition to cable glands in brass, plastic and stainless steel, we provide sealing plugs, pressure compensation elements, adaptors and matching accessories, including lock nuts, flat gasket seals and earthing rings.

As with the enclosures, the cable glands come in IP protective classes from IP 54 to IP 69K and can be used as required in industrial standard applications, EMC applications or indeed in explosive hazard areas. They have the appropriate approvals for use in these areas. Ex certified Klippon® cable glands also allow the connection of braided and shielded armour with or without a lead sheath, as well as single wire reinforcement and metal foil armoured cables and wires. They can be used in temperatures from -60 °C to +180 °C.

Depending on the connector range and the application area, the cable glands, sealing plugs, adaptors, pressure compensation elements and accessories are certified and manufactured in line with the following standards:

- EN 60423 (metric thread)
- EN 40430 (PG and NPT thread)
- EN 60079-0 (General ATEX regulations)
- EN 60079-1 (Ex d ATEX regulations)
- EN 60079-7 (Ex e ATEX regulations)
- EN 60079-11 (Ex i ATEX regulations)
- EN 50262 (strain relief)
- EN 60529 (IP protection degree)

The range of cable glands, sealing plugs and pressure compensation elements is available in metric (M) and highstrength (PG) threads in sizes from M 12 to M 75 and PG 7 to PG 48. When choosing glands and sealing plugs, please refer to the table for the sealing characteristics of the O-rings, flat gaskets and seal inserts. The O-ring or flat gasket is always used to seal the connecting thread of an enclosure, while the seal insert for the cable gland actually seals and clamps the connection cable.

You should always observe the maximum drill-hole diameter when installing a cable gland, sealing plug, adaptor or pressure compensation element (e.g. onto the gland plate of an enclosure). These must not exceed the following specified maximum values / tolerances so that the protection degree of the whole enclosure can be guaranteed.

Through-hole information

M thread	Through-hole, in mm
M 12	12.2
M 16	16.2
M 20	20.2
M 25	25.2
M 32	32.2
M 40	40.2
M 50	50.2
M 63	63.2
M 75	75.2
PG thread	**Through-hole, in mm**
PG 7	12.4
PG 9	15.1
PG 11	18.5
PG 13.5	20.4
PG 16	22.5
PG 21	28.3
PG 29	37.4
PG 36	47.2
PG 42	54.2
PG 48	59.5

Overview of sealing materials for O-rings, flat gaskets as well as seal inserts

Abbreviation	Material	Trade name	Temperature range	Chemical resistance	Fire resistant	Shore	Free from halogens	UV resistance
TPE	Thermo-plastic elastomer	Santroprene	-40 °C...+130 °C	Hydrocarbons, oils, acids	UL94, HB	64	Yes	very good
CR	Chloroprene rubber	Neoprene	-40 °C...+130 °C	Mineral oils, greases, fuels	very good	40 - 90	No	very good
NBR	Nitrile rubber	Perbunan, Nitrile	-40 °C...+130 °C	Hydrocarbons, oils, acids, aliphatic solvents, greases, fuels	weak	40 - 90	No	good
EPDM	Ethylene-propylene-diene rubber	Keltan	-50 °C...+130 °C	Weather-, grease-, mineral oil-, chlorine- ,and ozone resistant, hydrocarbons	weak	20 - 90		very good
FPM	Fluoro-rubber	Viton	-25 °C...+200 °C	ozone, oxygen, mineral oils, synthetic hydraulic fluids, fuels, aromatics, many organic solvents and chemicals	weak	65 - 95		good

Abbreviations – technical data

A, L	Length in mm
L1	Length of thread in mm
D	Diameter in mm
S	Thickness in mm
GWDR	Threaded sealing ring or IP washer in mm
S1,S2	Depth in mm
SW	Distance across flats in mm
KB	Clamping range in mm
Thread	External thread
SUHB	Shroud
DR	Body torque in Nm
MODR	Mounting torque in Nm
DR HM	Cap nut torque in Nm
Qty.	Packing unit in pieces

Product designation

VG	Cable gland
VP	Sealing plugs
KDSU	Klippon® Double Seal Universal
KDSW	Klippon® Double Seal for SWA
KDSX	Klippon® Double Seal for SWB/STA
KSG	Klippon® Standard Gland
KUB	Klippon® Universal Barrier
KSPA	Klippon® Stopping Plug Type A
KSPM	Klippon® Stopping Plug Mushroom
KSWN	Klippon® Sealing Washer Nylon
KSWF	Klippon® Sealing Washer Red Fibre
KSP	Klippon® Shroud PVC/Silicone
SKMU	Hexagon nut
DAE	Pressure compensation element
BD	Breather drain (compensation element)
EWS	Drain plug
SZS	Serrated Star Washers
ZE	Strain relief
EMV	Electromagnetic compatibility
SKS	Spiral kink protection
GWDR	Threaded sealing ring or IP washer
ZR	Onion ring system (removable seal incisions system)

Glands and accessories

The tables below provide an overview of the Weidmüller cable glands and the recommended accessories.

Standard glands

Material/Type		Approvals					Thread sealing rings			Locknuts			
		IP class of protection		Ex	EMC	Armouring	CSM	CR	O-Ring	grey	black	brass	MS EMC
		without seal	with seal				GWDR PO	GWDR...NR		SKMU...K GR	SKMU...K SW	SKMU...MS	SKMU EMV...
Plastic													
	VG ... K67	IP 67								•			
	VG ... K68	IP 68 / 5 bar								•			
	VG ... K68 SKS	IP 68 / 5 bar								•			
Nickel-plated brass													
	VG ... MS54	IP 54	IP 65				optional					•	
	VG ... MS68		IP 68 / 5 bar, IP 69k						included			•	
	VG ... MS54-ZE	IP 54										•	
	VG...MS54 ZE BS	IP 54										•	
	VG...MS54 ZR	IP 54										•	
	VG ... EMV		IP 68 / 10 bar		•				included				•
	VG ... 1/EMV		IP 68 / 5 bar, IP 69k		•				included				•
Stainless steel													
	VG...SS68		IP 68 / 5 bar, IP 69k						included			•	

Cable glands Ex

Material/Type		Approvals					Thread sealing rings			Locknuts			
		IP class of protection		Ex	EMC	Armouring	CSM	CR	O-Ring	grey	black	brass	MS EMC
		without seal	with seal				GWDR PO	GWDR...NR		SKMU...K GR	SKMU...K SW	SKMU...MS	SKMU EMV...
Nickel-plated brass, Ex													
	KDSU...BN/BS O NI		IP 68 / 2.5 bar	Exe/d		•			included			•	
	KUB...BS O NI		IP 66, IP 68 / 10 bar	Exe/d		•			included			•	
	KDSW...BN/BS O/L NI	IP 54	IP 54, IP 66, IP 68 / 2.5 bar	Exe/d		•	optional					•	
	KDSX...BS O NI	IP 54	IP 54, IP 66, IP 68 / 2.5 bar	Exe/d		•	optional					•	
	KSG...BN/BS O NI		IP 66, IP 68 / 2.5 bar	Exe/d					included			•	
Brass Ex													
	KDSU...BN/BS O SC		IP 68 / 2.5 bar	Exe/d		•			included			•	
	KUB...BS O SC		IP 66, IP 68 / 10 bar	Exe/d		•			included			•	
	KDSW...BN/BS O/L SC	IP 54	IP 54, IP 66, IP 68 / 2.5 bar	Exe/d		•	optional					•	
	KDSX...BS O SC	IP 54	IP 54, IP 66, IP 68 / 2.5 bar	Exe/d		•	optional					•	
	KSG...BN/BS O SC		IP 66, IP 68 / 2.5 bar	Exe/d					included			•	
	Ex - Stainless steel glands on request												

Adaptor

Material/Type		Approvals		Thread sealing rings			Locknuts			
		IP class of protection with seal	Ex	CSM GWDR PO	CR GWDR...NR	O-Ring	grey SKMU...K GR	black SKMU...K SW	brass SKMU...MS	MS EMC SKMU EMV...
Plastic										
	DAE M12 PA	IP 66, IP 68, IP 69K				included				
	DAE M12 PA long	IP 66, IP 68, IP 69K				included		•		
Plastic Ex										
	EWS	IP 54	•	•						
Stainless steel										
	DAE M12 SS	IP 66, IP 68, IP 69K				included			•	•
Stainless steel Ex										
	BD 1 ss	IP 66	•			included				
Brass Ex										
	BD 1 brass	IP 66	•			included				
Brass Ex										
	KLIPPON BDX ... B	IP 66	•			included				
Stainless steel Ex										
	KLIPPON BDX ... S	IP 66	•			included				

Stopping plugs

Material/Type		Approvals IP class of protection without seal	Approvals IP class of protection with seal	Ex	Thread sealing rings CSM GWDR PO	Thread sealing rings CR GWDR...NR	Thread sealing rings O-Ring	Locknuts grey SKMU...K GR	Locknuts black SKMU...K SW	Locknuts brass SKMU...MS	Locknuts MS EMC SKMU EMV...
Plastic											
	VP ... K54	IP 54	IP 65					•			
Nickel-plated brass											
	VP ... MS65		IP 68				included			•	
Stainless steel											
	KSPM...SSC		IP 66, IP 68	Exe/d			included			•	
Plastic Ex											
	VP...Ex SW	IP 66	IP 66, IP 68	Exe		optional			•		
	KSPM...PL		IP 66, IP 68	Exe			Nitrile		•		
Nickel-plated brass, Ex											
	VP...Ex MS		IP 68	Exe/d			included			•	
	KSPA...BNI	IP 54		Ex d						•	
Brass Ex											
	KSPM...BSC		IP 66, IP 68	Exe/d			included			•	

Cable glands - Plastic - IP 67

Inexpensive cable gland for industrial applications, without approvals.

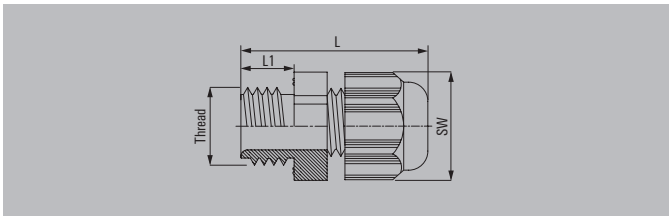

Technical data

Material / Colour	Polyamide 6 / RAL 7035
Seal insert	CR
Temperature range	-20 °C...80 °C
Protection degree	IP 67
Flammability rating	V-2

Note	Version with moulded sealing lip Length L varies depending on the cable diameter used

Ordering data

Typ	Thread	KB	L/L1	SW	TRQ CN min. / max.	TRQ BO min. / max.	Qty.	Order No.
metric								
VG M12-K67	M 12 / 1.5	3-6.5	23.9 / 8	15	1.50 / 2.50	1.00 / 3.00	100	**1909660000**
VG M16-K67	M 16 / 1.5	4-8	27.7 / 8	19	2.00 / 3.00	1.00 / 4.00	50	**1909670000**
VG M16-K67	M 16 / 1.5	5-10	29 / 10	22	2.00 / 3.00	1.00 / 4.00	50	**1909680000**
VG M20-K67	M 20 / 1.5	6-12	29.2 / 10	24	4.50 / 5.50	2.00 / 5.00	50	**1909690000**
VG M20-K67	M 20 / 1.5	10-14	32.8 / 10	27	5.00 / 6.00	2.00 / 5.00	50	**1909700000**
VG M25-K67	M 25 / 1.5	13-18	37.9 / 8	29	7.00 / 9.00	2.00 / 5.00	25	**1909710000**
VG M32-K67	M 32 / 1.5	18-25	40.7 / 10	36	8.00 / 10.00	3.00 / 7.00	20	**1909720000**
VG M40-K67	M 40 / 1.5	22-32	51.3 / 10	46	16.00 / 19.00	7.00 / 12.00	10	**1909730000**
VG M50-K67	M 50 / 1.5	30-38	53.5 / 18	60	20.00 / 24.00	9.50 / 15.50	10	**1909740000**
VG M63-K67	M 63 / 1.5	34-44	55 / 18	65	20.50 / 25.50	12.50 / 18.50	10	**1909750000**
PG								
VG PG7-K67	PG 7	3-6.5	23.9 / 8	15	1.50 / 2.50	1.20 / 1.80	100	**1909760000**
VG PG9-K67	PG 9	4-8	27.7 / 8	19	2.00 / 3.00	1.20 / 1.80	50	**1909770000**
VG PG11-K67	PG 11	5-10	29 / 8	22	2.00 / 3.00	1.50 / 2.50	50	**1909780000**
VG PG13.5-K67	PG 13.5	6-12	29.2 / 9	24	4.50 / 5.50	2.50 / 3.50	50	**1909790000**
VG PG16-K67	PG 16	10-14	32.8 / 10	27	5.00 / 6.00	2.50 / 4.50	50	**1909800000**
VG PG21-K67	PG 21	13-18	37.9 / 11	33	5.00 / 6.00	7.00 / 9.00	25	**1909810000**
VG PG29-K67	PG 29	18-25	40.7 / 11	42	7.00 / 8.00	7.50 / 10.50	20	**1909820000**
VG PG36-K67	PG 36	22-32	51.3 / 13	53	14.50 / 15.30	9.50 / 12.50	10	**1909830000**
VG PG42-K67	PG 42	30-38	53.5 / 13	60	17.00 / 19.00	12.00 / 16.00	10	**1909840000**
VG PG48-K67	PG 48	34-44	55 / 14	65	19.00 / 21.00	12.00 / 16.00	10	**1909850000**
Note	Integrated strain relief, halogen-free without sealing ring.							

Cable glands - Plastic - IP 68

Plastic cable gland with integrated strain relief for industrial applications requiring IP 68 protection.

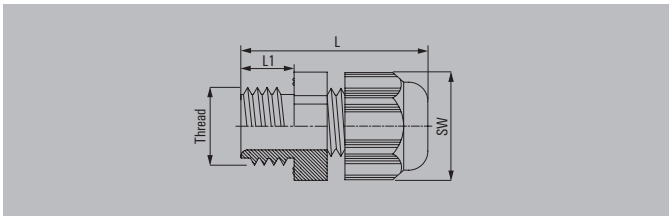

Technical data

Material / Colour	Polyamide 6 / RAL 7035
Seal insert	CR
Temperature range	-30 °C...80 °C
Protection degree	IP 68 - 5 bar (30 min.)
Flammability rating	V-2

Note	Version with moulded sealing lip Length L varies depending on the cable diameter used

Ordering data

Typ	Thread	KB	L/L1	SW	TRQ CN min. / max.	TRQ BO min. / max.	Qty.	Order No.
metric								
VG M12-1/K68	M 12 / 1.5	3-6.5	32.4 / 8	15	1.50 / 2.50	1.00 / 3.00	100	**1772280000**
VG M16 - K 68	M 16 / 1.5	5-10	39.7 / 10	22	2.00 / 3.00	1.00 / 4.00	50	**1772290000**
VG M16-1/K68	M 16 / 1.5	4-8	35.7 / 8	19	2.00 / 3.00	1.00 / 4.00	50	**1909860000**
VG M20-1/K68	M 20 / 1.5	6-12	41.2 / 10	24	4.50 / 5.50	2.00 / 5.00	50	**1772300000**
VG M25 - K 68	M 25 / 1.5	13-18	48.2 / 10	33	7.00 / 9.00	2.00 / 5.00	25	**1772310000**
VG M25-1/K68	M 25 / 1.5	11-17	43.2 / 8	29	7.00 / 9.00	2.00 / 5.00	25	**1909870000**
VG M32 - K 68	M 32 / 1.5	18-25	50.8 / 18	42	8.00 / 10.00	3.00 / 7.00	20	**1772320000**
VG M32-1/K68	M 32 / 1.5	15-21	50.7 / 10	36	8.00 / 10.00	3.00 / 7.00	20	**1909880000**
VG M40 - K 68	M 40 / 1.5	22-32	69.9 / 18	53	16.00 / 19.00	7.00 / 12.00	10	**1772330000**
VG M40-1/K68	M 40 / 1.5	19-28	55.2 / 10	46	16.00 / 19.00	7.00 / 12.00	10	**1909890000**
VG M50 - K 68	M 50 / 1.5	30-38	71.7 / 18	60	20.00 / 24.00	9.50 / 15.50	10	**1772340000**
VG M63-1/K68	M 63 / 1.5	34-44	72.9 / 18	65	20.50 / 25.50	12.50 / 18.50	10	**1772350000**
PG								
VG 7-K68	PG 7	3-6.5	30.5 / 8	15	1.50 / 2.50	1.20 / 1.80	100	**1568970000**
VG 9-K68	PG 9	4-8	34 / 8	19	2.00 / 3.00	1.20 / 1.80	50	**1568980000**
VG 11-K68	PG 11	5-10	37 / 8	22	2.00 / 3.00	1.50 / 2.50	50	**1568990000**
VG 13.5-K68	PG 13.5	6-12	39 / 9	24	4.50 / 5.50	2.50 / 3.50	50	**1569000000**
VG 16-K68	PG 16	10-14	42.5 / 10	27	5.00 / 6.00	2.50 / 4.50	50	**1569010000**
VG 21-K68	PG 21	13-18	48 / 11	33	5.00 / 6.00	7.00 / 9.00	25	**1569020000**
VG 29-K68	PG 29	18-25	53 / 11	42	7.00 / 8.00	7.50 / 10.50	20	**1569030000**
VG 36-K68	PG 36	22-32	65 / 13	53	14.50 / 15.50	9.50 / 12.50	10	**1569040000**
VG 42-K68	PG 42	30-38	68 / 13	60	17.00 / 19.00	12.00 / 16.00	10	**1569050000**
VG 48-K68	PG 48	34-44	69 / 14	65	19.00 / 21.00	12.00 / 16.00	10	**1718770000**
Note	Long-thread version on request, halogen-free without sealing ring							

Cable glands - Plastic - SKS

Plastic cable gland with spiral bending protection specially suited for flexible connections.

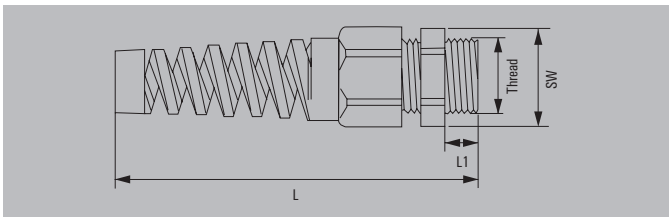

Technical data

Material / Colour	Polyamide 6 / RAL 7035
Seal insert	CR
Temperature range	-30 °C...80 °C
Protection degree	IP 68 - 5 bar (30 min.)
Flammability rating	V-2

Note	Version with moulded sealing lip Length L varies depending on the cable diameter used

Ordering data

Typ	Thread	KB	L/L1	SW	TRQ CN min. / max.	TRQ BO min. / max.	Qty.	Order No.
metric								
VGM12-K68 SKS	M 12 / 1.5	3-6.5	65 / 8	15	1.50 / 2.50	1.50 / 2.50	100	**1776700000**
VGM16-K68 SKS	M 16 / 1.5	5-10	90 / 10	22	2.00 / 3.00	2.00 / 3.00	50	**1776710000**
VGM20-K68 SKS	M 20 / 1.5	6-12	106 / 10	24	4.50 / 5.50	2.00 / 5.00	50	**1778860000**
VGM20-K68 SKS	M 20 / 1.5	10-14	116 / 10	27	5.00 / 6.00	2.00 / 5.00	50	**1776720000**
VGM25-K68 SKS	M 25 / 1.5	13-18	129 / 10	33	7.00 / 9.00	2.00 / 5.00	25	**1776730000**
PG								
VG 9-K68 SKS	PG 9	4-8	79 / 8	19	2.00 / 3.00	1.50 / 2.50	50	**1720480000**
VG 11-K68 SKS	PG 11	5-10	89 / 8	22	2.00 / 3.00	1.50 / 2.50	100	**1720490000**
VG 13.5-K68 SKS	PG 13.5	6-12	105 / 9	24	4.50 / 5.50	2.50 / 3.50	50	**1720500000**
VG 16-K68 SKS	PG 16	10-14	117 / 10	27	5.00 / 6.00	2.50 / 4.50	25	**1720510000**
VG 21-K68 SKS	PG 21	13-18	130 / 11	33	5.00 / 6.00	7.00 / 9.00	20	**1720520000**
Note	VDE for metric variants, halogen free, without sealing ring							

Cable glands - Brass - IP 54

Standard brass cable gland for industrial applications that require IP 54 protection.

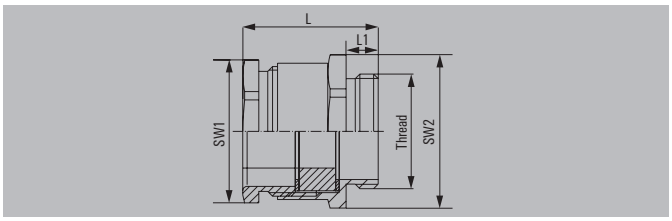

Technical data

Material	Brass, nickel-plated
Seal insert	NBR
Temperature range	-20 °C...60 °C
Protection degree	IP 54

Note	Optional sealing ring Length „L" varies depending on the cable diameter used.

Ordering data

Typ	Thread	KB	L/L1	SW1/SW2	TRQ CN min. / max.	TRQ BO min. / max.	Qty.	Order No.
metric								
VGM12-MS54	M 12 / 1.5	5-7	21.5 / 5	13 / 14	5.30 / 5.30	8.00 / 8.00	100	**1778410000**
VGM12-MS54	M 12 / 1.5	6-8	22 / 6	15 / 17	5.30 / 5.30	8.00 / 8.00	100	**1778400000**
VGM16-MS54	M 16 / 1.5	8-10	26 / 5	18 / 20	6.70 / 6.70	10.00 / 10.00	100	**1778390000**
VGM20-MS54	M 20 / 1.5	8-10	26.5 / 6	18 / 22	8.00 / 8.00	12.00 / 12.00	50	**1778380000**
VGM20-MS54	M 20 / 1.5	10-12	26.5 / 6.5	20 / 22	8.00 / 8.00	12.00 / 12.00	50	**1778370000**
VGM25-MS54	M 25 / 1.5	12-14	27.5 / 7	22 / 27	8.00 / 8.00	12.00 / 12.00	50	**1778360000**
VGM25-MS54	M 25 / 1.5	15-17	29.5 / 7	28 / 30	8.00 / 8.00	12.00 / 12.00	50	**1778350000**
VGM32-MS54	M 32 / 1.5	24-26	33 / 8	38 / 40	12.00 / 12.00	18.00 / 18.00	25	**1778340000**
VGM40-MS54	M 40 / 1.5	33-35	33 / 9	37 / 43	12.00 / 12.00	18.00 / 18.00	25	**1778330000**
VGM50-MS54	M 50 / 1.5	31-33	39 / 9	47 / 55	13.30 / 13.30	20.00 / 20.00	10	**1778320000**
VGM50-MS54	M 50 / 1.5	39-41	43 / 10	54 / 57	13.30 / 13.30	20.00 / 20.00	5	**1778310000**
VGM63-MS54	M 63 / 1.5	45-47	45 / 10	60 / 68	13.30 / 13.30	20.00 / 20.00	5	**1778300000**
PG								
VG 7-MS54	PG 7	5-7	20.5 / 5	13 / 14	4.20 / 4.20	6.25 / 6.25	100	**0521500000**
VG 9-MS54	PG 9	6-8	22 / 6	15 / 17	4.20 / 4.20	6.25 / 6.25	100	**0261500000**
VG 11-MS54	PG 11	8-10	26 / 6	18 / 20	4.20 / 4.20	6.25 / 6.25	50	**0260700000**
VG 13.5-MS54	PG 13.5	10-12	26 / 6.5	20 / 22	4.20 / 4.20	6.25 / 6.25	50	**0260800000**
VG 16-MS54	PG 16	12-14	27 / 6.5	22 / 24	5.00 / 5.00	7.50 / 7.50	50	**0261400000**
VG 21-MS54	PG 21	15-17	29.5 / 7	28 / 30	6.70 / 6.70	10.00 / 10.00	50	**0260900000**
VG 29-MS54	PG 29	24-26	33 / 8	37 / 40	6.70 / 6.70	10.00 / 10.00	25	**0261000000**
VG 36-MS54	PG 36	33-35	39 / 9	47 / 50	6.70 / 6.70	10.00 / 10.00	20	**0497600000**
VG 42-MS54	PG 42	39-41	44 / 10	54 / 57	6.70 / 6.70	10.00 / 10.00	10	**0497700000**
VG 48-MS54	PG 48	45-47	45 / 10	60 / 64	6.70 / 6.70	10.00 / 10.00	5	**1718780000**
Note		Further versions on request						

Cable glands - Brass - ZR

Brass cable gland with incision seal for standard industrial applications. The seal insert which is used contains several removable or separable inlets. This enables cables with a diameter of 4 mm to 41 mm to be connected.

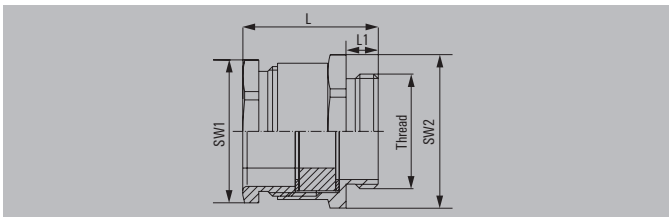

Technical data

Material	Brass, nickel-plated
Seal insert	NBR
Temperature range	-20 °C...80 °C
Protection degree	IP 54

Note

Ordering data

Typ	Thread	KB	L/L1	SW1/SW2	TRQ CN, min.	TRQ BO, min.	D1	D2	D3	D4	Qty.	Order No.
metric												
VG M20-MS54	M 20 / 1.5	4-13	26.5 / 6.5	22 / 24	3.05	6.25	4	7	10	13	50	**1009560000**
VG M25-MS54	M 25 / 1.5	8.5-18	27.5 / 7	28 / 30	3.66	7.50	8.5	11.5	14.5	18	25	**1009570000**
VG M32-MS54	M 32 / 1.5	16-26	33 / 8	37 / 40	4.88	10.00	16	19	22	25	25	**1009580000**
VG M40-MS54	M 40 / 1.5	23-30	33 / 33	47 / 50	4.88	10.00	23	26	29	32	10	**1009590000**
VG M50-MS54	M 50 / 1.5	32-40	39 / 39	54 / 57	4.88	10.00	32	35	38	41	5	**1009600000**
PG												
VGPG13.5-MS54	PG 13.5	7.5-12.5	22 / 6.5	20 / 22	4.20	6.25	7.5	10	12.5	0	50	**1009610000**
VG PG16-MS54	PG 16	7.5-15	27 / 6.5	22 / 24	5.00	7.50	7.5	10	12.5	15	50	**1009620000**
VG PG21-MS54	PG 21	10-19	29.5 / 7	28 / 30	6.70	10.00	10	13	16	19	25	**1009630000**
VG PG29-MS54	PG 29	18-27	33 / 8	37 / 40	6.70	10.00	18	21	24	27	25	**1009640000**
VG PG36-MS54	PG 36	24-33	39 / 9	47 / 50	6.70	10.00	24	27	30	33	10	**1009650000**
VG PG42-MS54	PG 42	30-39	44 / 10	54 / 57	6.70	10.00	30	33	36	39	5	**1009670000**

Note D1-D4 are the removable seal incisions from 4 mm to 41 mm.

Cable glands - Brass - IP 68

Standard brass cable gland for industrial applications that require IP 68 or IP 69K protection.

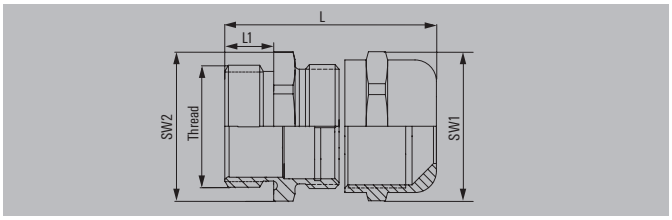

Technical data

Material	Brass, nickel-plated
O-ring / Seal insert	NBR / CR
Temperature range	-40 °C...100 °C
Clamp insert	Polyamide
Protection degree with GWDR	IP 68 - 5 bar, IP 69K

Note Length „L" varies depending on the cable diameter used; IP 69K applies to all metric cable glands; the following thread sizes PG29, PG36, PG42 and PG48 are excluded from IP 69K.

Ordering data

Typ	Thread	KB	L/L1	SW1/SW2	TRQ CN min. / max.	TRQ BO min. / max.	Qty.	Order No.
metric								
VG M12 - MS 68	M 12 / 1.5	3-6.5	28 / 6	14 / 14	4.50 / 5.50	2.50 / 3.50	50	**1772200000**
VG M16 - MS 68	M 16 / 1.5	4-8	33 / 7	17 / 18	5.00 / 6.00	3.50 / 4.50	50	**1772210000**
VG M16-1/MS68	M 16 / 1.5	4.5-10	37.3 / 7	20 / 20	5.00 / 6.00	3.50 / 4.50	50	**1909910000**
VG M20 - MS 68	M 20 / 1.5	6-12	38 / 8	22 / 22	7.00 / 9.00	5.00 / 6.00	50	**1772220000**
VG M25 - MS 68	M 25 / 1.5	10-14	42 / 8	24 / 27	10.00 / 12.00	5.00 / 7.00	25	**1772230000**
VG M25-1/MS68	M 25 / 1.5	11-17	42 / 8	27 / 27	10.00 / 12.00	5.00 / 7.00	25	**1909920000**
VG M32 - MS 68	M 32 / 1.5	13-18	48 / 9	30 / 34	16.00 / 18.00	5.00 / 7.00	25	**1772240000**
VG M32-1/MS68	M 32 / 1.5	15-21	45 / 8	34 / 34	16.00 / 18.00	5.00 / 7.00	20	**1909930000**
VG M40 - MS 68	M 40 / 1.5	18-25	53 / 9	40 / 43	21.00 / 23.00	10.50 / 13.50	20	**1772250000**
VG M40-1/MS68	M 40 / 1.5	19-28	55.1 / 9	43 / 43	21.00 / 23.00	10.50 / 13.50	20	**1909940000**
VG M50 - MS 68	M 50 / 1.5	22-32	57 / 9	50 / 55	38.50 / 41.50	16.00 / 20.00	15	**1772260000**
VG M50-1/MS68	M 50 / 1.5	27-38	62.2 / 9	58 / 58	38.50 / 41.50	16.00 / 20.00	12	**1909950000**
VG M63 - MS 68	M 63 / 1.5	34-44	65 / 14	64 / 68	48.00 / 52.00	22.50 / 27.50	12	**1772270000**
PG (IP 69K)								
VG 7-MS68	PG 7	3-6.5	28 / 6	14 / 14	4.50 / 5.50	2.50 / 3.50	50	**1569060000**
VG 9-MS68	PG 9	4-8	28 / 6	17 / 17	5.00 / 6.00	3.50 / 4.50	50	**1569070000**
VG 11-MS68	PG 11	5-10	31 / 6	20 / 20	6.50 / 7.50	4.50 / 5.50	50	**1569080000**
VG 13.5-MS68	PG 13.5	6-12	31 / 6.5	22 / 22	7.00 / 9.00	4.50 / 6.50	50	**1569090000**
VG 16-MS68	PG 16	10-14	34 / 6.5	24 / 24	10.00 / 12.00	6.00 / 8.00	25	**1569100000**
VG 21-MS68	PG 21	13-18	39 / 7	30 / 30	16.00 / 18.00	9.00 / 11.00	25	**1569110000**
PG (IP68)								
VG 29-MS68	PG 29	18-25	47 / 8	40 / 50	21.00 / 23.00	13.50 / 16.50	20	**1569120000**
VG 36-MS68	PG 36	22-32	57 / 10	50 / 50	38.50 / 41.50	18.00 / 22.00	15	**1569130000**
VG 42-MS68	PG 42	30-38	60 / 12	58 / 58	43.00 / 47.00	25.00 / 29.00	12	**1569140000**
VG 48-MS68	PG 48	34-44	63 / 14	64 / 64	48.00 / 52.00	32.50 / 37.50	12	**1718790000**

Note Long-thread version on request
VDE for metric version

Cable glands - Brass - ZE

Brass cable glands with external, centrally positioned strain relief provided by clamping jaws. The seal insert which is used contains several removable or separable inlets.

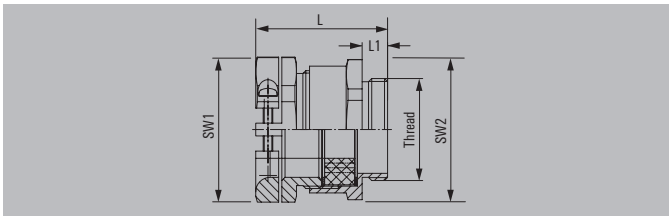

Technical data

Material	Brass, nickel-plated
Seal insert	NBR
Temperature range	-20 °C...80 °C
Protection degree	IP 54

Note	Optional sealing ring Length „L" varies depending on the cable diameter used.

Ordering data

Typ	Thread	KB	KB ZE	L/L1	SW1/SW2	TRQ CN min. / max.	TRQ BO min. / max.	Qty.	Order No.
metric									
VGM12-MS54 ZE	M 12 / 1.5	5-7	5.8-8	21.5 / 6	14 / 16	5.33 / 5.33	8.00 / 8.00	100	**1778420000**
VGM16-MS54 ZE	M 16 / 1.5	4-10	6.5-10	26 / 6	18 / 19	6.67 / 6.67	10.00 / 10.00	100	**1778440000**
VGM20-MS54 ZE	M 20 / 1.5	6.5-12.5	7.5-12	26.5 / 6.5	22 / 22	8.00 / 8.00	12.00 / 12.00	50	**1778450000**
VGM20-MS54 ZE	M 20 / 1.5	6.5-12.5	8.5-14	26.5 / 6.5	22 / 24	8.00 / 8.00	12.00 / 12.00	50	**1778460000**
VGM25-MS54 ZE	M 25 / 1.5	9-19	12-21	29.5 / 7	30 / 34	8.00 / 8.00	12.00 / 12.00	50	**1778480000**
VGM32-MS54 ZE	M 32 / 1.5	17-27	19-30	33 / 8	40 / 42	12.00 / 12.00	18.00 / 18.00	25	**1778490000**
VGM40-MS54 ZE	M 40 / 1.5	23-33	25-37	33 / 8	50 / 52	12.00 / 12.00	18.00 / 18.00	25	**1778500000**
VGM50-MS54 ZE	M 50 / 1.5	29-39	31-43	43 / 9	57 / 59	13.33 / 13.33	20.00 / 20.00	5	**1778520000**
VGM63-MS54 ZE	M 63 / 1.5	35-45	35-48	45 / 10	66 / 64	13.33 / 13.33	20.00 / 20.00	5	**1778530000**
PG									
VG 7-MS54-ZE	PG 7	5-7	5.8-8	27 / 5	14 / 16	4.20 / 4.20	6.25 / 6.25	50	**1718800000**
VG 9-MS54-ZE	PG 9	4-10	6.5-10	30.5 / 6	17 / 19	4.20 / 4.20	6.25 / 6.25	50	**1718810000**
VG 11-MS54-ZE	PG 11	6.5-12.5	7.5-12	31.5 / 6	20 / 22	4.20 / 4.20	6.25 / 6.25	50	**1718820000**
VG 13.5-MS54-ZE	PG 13.5	6.5-12.5	8.5-14	32 / 6.5	22 / 24	4.20 / 4.20	6.25 / 6.25	50	**1718830000**
VG 16-MS54-ZE	PG 16	6.5-15	9.5-17	33 / 6.5	24 / 27	5.00 / 5.00	7.50 / 7.50	50	**1718840000**
VG 21-MS54-ZE	PG 21	9-19	12-21	38 / 7	30 / 34	6.70 / 6.70	10.00 / 10.00	50	**1718850000**
VG 29-MS54-ZE	PG 29	17-27	19-30	43 / 8	40 / 40	6.70 / 6.70	10.00 / 10.00	25	**1718860000**
VG 36-MS54-ZE	PG 36	23-33	25-37	49.5 / 9	50 / 50	6.70 / 6.70	10.00 / 10.00	10	**1718870000**
VG 42-MS54-ZE	PG 42	29-39	31-43	53.5 / 10	57 / 57	6.70 / 6.70	10.00 / 10.00	5	**1718880000**
VG 48-MS54-ZE	PG 48	35-45	35-48	55 / 10	64 / 64	6.70 / 6.70	10.00 / 10.00	5	**1718890000**
Note		Further versions on request							

Cable glands - Brass - ZE - BS

Industrial brass cable glands with strain-relief and trumpet-shaped anti-bend mechanism for connecting non-stationary cables and lines. The seal insert which is used contains several removable or separable inlets.

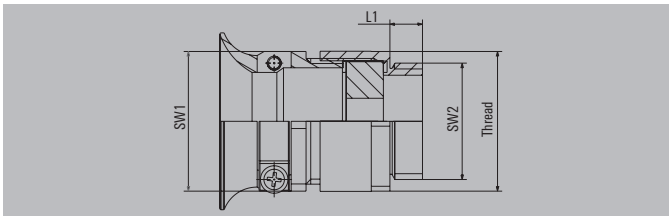

Technical data

Material	Brass, nickel-plated
Seal insert	NBR
Temperature range	-20 °C...80 °C
Protection degree	IP 54

Note

Ordering data

Typ	Thread	KB	KB ZE	L/L1	SW1/SW2	TRQ CN min. / max.	TRQ BO min. / max.	Qty.	Order No.
metric									
VGM16-MS54ZE	M 16 / 1.5	4-10	6-9	5 / 6	18 / 22	6.70 / 6.70	10.00 / 10.00	50	**1005190000**
VGM16-MS54ZE	M 16 / 1.5	6.5-12.5	8-12	34 / 5	20 / 26	6.70 / 6.70	10.00 / 10.00	50	**1005200000**
VGM20-MS54ZE	M 20 / 1.5	6.5-12.5	8-12	37.8 / 6	22 / 26	8.00 / 8.00	12.00 / 12.00	50	**1005210000**
VGM20-MS54ZE	M 20 / 1.5	6.5-15	10-15	37.8 / 6.5	24 / 32	8.00 / 8.00	12.00 / 12.00	50	**1005220000**
VGM25-MS54ZE	M 25 / 1.5	9-19	14-20	44 / 7	30 / 38	8.00 / 8.00	12.00 / 12.00	25	**1005230000**
VGM32-MS54ZE	M 32 / 1.5	17-27	18-27	50.8 / 8	40 / 50	12.00 / 12.00	18.00 / 18.00	25	**1005240000**

Note

Clamping screws - Brass - IP 65

The halved cable glands are designed for use in HDC – RockStar® base and hoods. The seal insert which is used contains several removable or separable inlets.

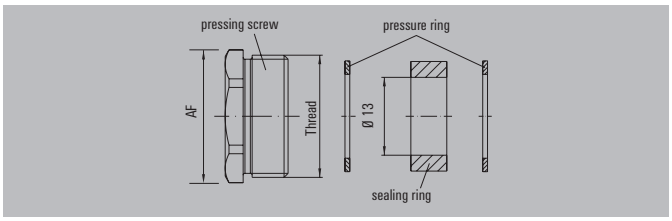

Technical data

Clamping screw material	Brass, nickel-plated
Sealing ring material	SBR/NBR
Pressure ring material	Polyamide
Temperature range	-20 °C...60 °C
Protection degree	IP 65

Note

Ordering data

Typ	Thread	Inserts in mm	SW	Qty.	Order No.
metric					
VG H M20 MS	M 20 / 1.5	4 / 7 / 10 / 13	20	50	**1921720000**
VG H M25 MS	M 25 / 1.5	8.5 / 11.5 / 14.5 / 18	25	25	**1921740000**
VG H M32 MS	M 32 / 1.5	16 / 19 / 22 / 25	32	20	**1921760000**
VG H M40 MS	M 40 / 1.5	23 / 26 / 29 / 32	40	10	**1921770000**
PG					
KV 11-M	PG 11	7.5 / 10 / 12.5	10	10	**1656390000**
KV 13-M	PG 13	7.5 / 10 / 12.5	10	10	**1656400000**
KV 16-M	PG 16	7.5 / 10 / 12.5 / 15	10	10	**1656410000**
KV 21-M	PG 21	10 / 13 / 16 / 19	10	10	**1656420000**
KV 29-M	PG 29	18 / 21 / 24 / 27	10	10	**1656430000**

Note

Cable glands - Brass - EMC

Brass cable gland for shielding against interference frequencies with a screening attenuation of up to 100 dB. Contact with cable shield by means of spring washer.

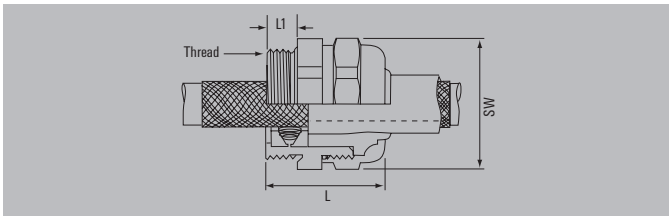

Technical data

Material	Brass, nickel-plated
O-Ring	NBR
Temperature range	-40 °C...135 °C
Protection degree	IP 68 - 10 bar
Clamp insert	TPE

Note Length „L" varies according to cable diameter used

Ordering data

Typ	Thread	KB	Shield Ø	L/L1	SW	TRQ CN min. / max.	TRQ BO min. / max.	Qty.	Order No.
metric									
VG EMV M18X1.5	M 18 / 1.5	6.5-9	3.50-7.50	41 / 10	24	9.00 / 30.00	30.00 / 30.00	50	**1706920000**
VG EMV M20X1.5	M 20 / 1.5	8-11	4.00-8.50	41 / 10	24	9.00 / 10.00	9.00 / 9.00	50	**1706940000**
VG EMV M24X1.5	M 24 / 1.5	14-18	9.50-16.50	43 / 11	30	10.00 / 10.00	10.00 / 10.00	50	**1706930000**
VG EMV M25X1.5	M 25 / 1.5	14-18	8.00-13.50	43 / 11	30	10.00 / 10.00	10.00 / 10.00	25	**1706950000**
PG									
VG EMV PG 7/9	PG 7	4-6.5	1.50-4.00	32 / 5	17	6.00 / 20.00	20.00 / 20.00	50	**1713870000**
VG EMV PG 9/11	PG 9	6.5-9.5	2.50-6.00	34 / 6	20	6.00 / 8.00	6.00 / 6.00	50	**1706860000**
VG EMV PG 11	PG 11	6.5-9	3.50-7.50	41 / 10	24	10.00 / 10.00	10.00 / 10.00	50	**1706870000**
VG EMV PG 13.5	PG 13.5	8-11	4.00-8.50	41 / 10	24	10.00 / 10.00	10.00 / 10.00	50	**1706880000**
VG EMV PG 16 K14	PG 16	10-14	6.50-11.50	43 / 11	30	10.00 / 10.00	10.00 / 10.00	25	**1706890000**
VG EMV PG 16 K18	PG 16	14-18	6.50-11.50	43 / 11	30	10.00 / 10.00	10.00 / 10.00	25	**1713880000**
VG EMV PG 21 K18	PG 21	17-20	12.50-17.50	45 / 11	35	10.00 / 15.00	10.00 / 10.00	10	**1706900000**
VG EMV PG K28	PG 21	17-20	12.50-17.50	45 / 11	35	8.00 / 15.00	8.00 / 8.00	10	**1713890000**
VG EMV PG 29 K26	PG 29	22-26	15.00-21.00	52 / 13	40	15.00 / 20.00	15.00 / 15.00	10	**1706910000**
VG EMV PG 29 K29	PG 29	25-29	22.00-25.00	58 / 13	50	20.00 / 20.00	20.00 / 20.00	5	**1713900000**
VG EMV PG36 K32-27	PG 36	27-32	24.00-30.50	54 / 9	50	15.00 / 30.00	15.00 / 15.00	10	**1770410000**

Note Further versions on request

Cable glands - Brass - 1/EMC

Brass cable gland for shielding against interference frequencies with a shield attenuation of up to 90 dB. Conical metal cage ensures multiple contacts with the cable shielding. On installation, the cable gland does not have divide into its individual parts, enabling particularly simple installation.

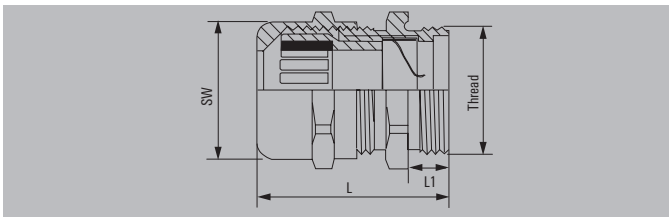

Technical data

Material	Brass, nickel-plated
O-ring / Seal insert	NBR / CR
Temperature range	-40 °C...100 °C
Protection degree	IP 68 - 10 bar
Clamp insert	Polyamide

Note Length „L" varies according to cable diameter used

Ordering data

Typ	Thread	KB	Shield Ø	L/L1	SW	TRQ CN min. / max.	TRQ BO min. / max.	Qty.	Order No.
metric									
VG M12 - MS 1/EMV	M 12 / 1.5	3-6.5	3.00-6.50	28.5 / 6	14	6.00 / 8.00	8.00 / 10.00	50	**1909490000**
VG M16 - MS 1/EMV	M 16 / 1.5	4.5-10	4.00-10.00	37.3 / 7	20	5.00 / 7.00	8.00 / 10.00	50	**1909500000**
VG M20 - MS 1/EMV	M 20 / 1.5	6-12	5.00-12.00	38.8 / 8	22	8.00 / 10.00	12.00 / 15.00	50	**1909510000**
VG M25 - MS 1/EMV	M 25 / 1.5	11-17	10.00-17.00	42 / 8	27	6.00 / 8.00	9.00 / 12.00	25	**1909520000**
VG M32 - MS 1/EMV	M 32 / 1.5	15-21	13.50-21.00	45 / 8	34	6.00 / 10.00	9.00 / 15.00	20	**1909530000**
VG M40 - MS 1/EMV	M 40 / 1.5	19-28	17.00-28.00	55.1 / 9	43	7.00 / 10.00	10.00 / 15.00	10	**1909540000**
VG M50 - MS 1/EMV	M 50 / 1.5	27-38	25.00-38.00	62.2 / 9	58	20.00 / 30.00	30.00 / 45.00	10	**1909550000**
VG M63 - MS 1/EMV	M 63 / 1.5	34-44	31.00-44.00	71.5 / 14	64	23.00 / 28.00	30.00 / 40.00	5	**1909560000**

Note Further versions on request

Cable glands - Stainless steel - IP 68

Stainless steel cable glands for standard industrial applications that require a high degree of protection (IP 68). These cable glands – with their resistance to impact and sea water – are also suitable for use in applications under extreme environmental conditions.

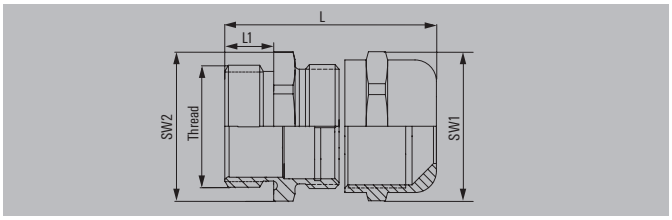

Technical data

Material	Stainless steel 1.4305 (303)
O-Ring / Seal insert	NBR / CR
Temperature range	-40 °C...100 °C
Protection degree	IP 69K, IP 68 - 5 bar (30 min.)

Note

Ordering data

Typ	Thread	KB	L/L1	SW1/SW2	TRQ CN min. / max.	TRQ BO min. / max.	Qty.	Order No.
metric								
VGM12-SS 68 KB 3-6.5	M 12 / 1.5	3-6.5	28 / 6	14 / 14	5.00 / 7.00	10.00 / 8.00	50	**1009840000**
VGM16-SS 68 KB 4-8	M 16 / 1.5	4-8	33 / 7	17 / 19	8.00 / 10.00	15.00 / 12.00	50	**1009850000**
VGM20-SS 68 KB 6-12	M 20 / 1.5	6-12	38 / 8	22 / 22	12.00 / 15.00	22.00 / 16.00	50	**1009860000**
VGM25-SS 68 KB 10-14	M 25 / 1.5	10-14	42 / 8	24 / 27	15.00 / 20.00	30.00 / 22.00	25	**1009870000**
VGM32-SS 68 KB 13-18	M 32 / 1.5	13-18	48 / 9	30 / 36	28.00 / 35.00	50.00 / 40.00	20	**1009880000**
VGM40-SS 68 KB 18-25	M 40 / 1.5	18-25	53 / 9	41 / 46	30.00 / 40.00	60.00 / 45.00	20	**1009890000**
VGM50-SS 68 KB 22-32	M 50 / 1.5	22-32	57 / 9	50 / 55	35.00 / 45.00	60.00 / 50.00	12	**1009900000**
VGM63-SS 68 KB 34-44	M 63 / 1.5	34-44	65 / 14	65 / 70	45.00 / 55.00	70.00 / 60.00	10	**1009910000**
PG								
VG 7-SS 68 KB 3-6.5	PG 7	3-6.5	28 / 6	14 / 14	5.00 / 7.00	10.00 / 8.00	50	**1009740000**
VG 9-SS 68 KB 4-8	PG 9	4-8	28 / 6	17 / 17	8.00 / 10.00	15.00 / 12.00	50	**1009750000**
VG 11-SS 68 KB 5-10	PG 11	5-10	31 / 6	22 / 22	10.00 / 13.00	20.00 / 15.00	50	**1009760000**
VG 16-SS 68 KB 10-14	PG 16	10-14	34 / 6.5	24 / 24	15.00 / 20.00	30.00 / 22.00	25	**1009780000**
VG 21-SS 68 KB 13-18	PG 21	13-18	39 / 7.5	30 / 30	28.00 / 35.00	50.00 / 40.00	25	**1009790000**
VG 29-SS 68 KB 18-25	PG 29	18-25	47 / 8	41 / 41	30.00 / 40.00	60.00 / 45.00	20	**1009800000**
VG 36-SS 68 KB 22-32	PG 36	22-32	57 / 9	50 / 50	35.00 / 45.00	60.00 / 50.00	15	**1009810000**
VG 42-SS 68 KB 30-38	PG 42	30-38	60 / 12	60 / 60	40.00 / 50.00	70.00 / 55.00	12	**1009820000**
VG 48-SS 68 KB 34-44	PG 48	34-44	63 / 14	65 / 65	45.00 / 55.00	70.00 / 60.00	10	**1009830000**
Note	1.4404 (316L) on request							

Overview: Klippon® cable glands and selection tool

ATEX / IECEx certified cable glands and stopping plugs

Cable Gland Type	Outer Elastomeric Seal	Inner Elastomeric Seal	Lead Option	Armour Clamp	Certification	IP Rating	Page No.
KDSU	YES	YES	NO	Universal	Ex d / Ex e	IP 68	C.30
KDSW	YES	YES	YES	Steel wire	Ex d / Ex e	IP 66, IP 68	C.34
KDSX	YES	YES	NO	Braided	Ex d / Ex e	IP 66, IP 68	C.40
KUB	YES	Compound	NO	Universal	Ex d	IP 68	C.44
KSG	YES	NO	NO	No	Ex d / Ex e	IP 66, IP 68	C.42

General

Health & Safety

When Weidmüller cable glands and the accessories are used and installed as prescribed within the data sheet provided, they will not cause any danger or hazard to the health or safety of persons, animals or property. The products should be installed by suitably trained/skilled personnel and in full accordance with the relevant legislative regulations and the accepted code of practice for the industry concerned.

Warning

Weidmüller cable glands and accessories should not be used within any application other than those specified for each product, unless Weidmüller issue a statement in writing that the product is suitable for the specified application. For further information on each product, we refer you to the specific Assembly Instructions and General Arrangement drawings, which are available on request. Weidmueller takes no responsibility for any damage, unjury or other consequential loss caused where the glands are not installed or used according to our Assembly Instructions.

Installation in hazardous area applications

If cable glands and accessories are installed in hazardous area applications, international and national standards of the Explosion Protection have to be considered.

The KDSU type glands provide a universal armour clamp for steel wire, steel tape, screened or braided cables. An electrical bond between the cable armour and the gland is ensured. The gland can also be used to terminate un-armoured cables. In addition, the gland is fitted with two separate seals to seal the outer and inner cable insulation.
When choosing the gland with a neoprene sealing a temperature range from -20 °C to +85 °C will be achieved. Whereas the gland with silicone sealing ensures a temperature range from -60 °C to +180 °C. With both sealing materials an IP rating of IP 68 to 25 metres (30 min. at 2.5 bar) is maintained. The KDSU type gland is approved for Flameproof Ex d and Increased Safety Ex e applications.

Structure of the part description

Order key	[Type]	[a]	[b]	[c]	[d]	[e]	[f]	[ggg]
Example article description	KDSU	M20	B	S	0	SC	1	G16

Meaning

[Type] = Gland type (KDSU)
[a] = Entry thread (M20-M75)
[b] = Material (B = brass)
[c] = Seal material (S = Silicone, N = Neoprene)
[d] = Continuity for lead sheath (L = yes, 0 = no)
[e] = Plating (SC = self-coloured, NI = Nickel)
[f] = Cable outer sheath (1 = Reduced, 2 = Standard)
[ggg] = Gland size (G16-G75)

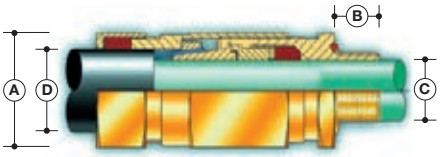

Note Refer to page C.27 Selection Guide Klippon® Cable Glands to determine the suitable order number

Dimensions

Gland Size [ggg]	Entry thread [a]	Entry thread Length [B]	Max Outer Diameter [A]	Max Length	Gland Seal Range: Cable Inner Sheath [C] Min	Cable Inner Sheath [C] Max	Cable Outer Sheath [D] Standard [f] = 2 Min	Cable Outer Sheath [D] Standard [f] = 2 Max	Cable Outer Sheath [D] Reduced [f] = 1 Min	Cable Outer Sheath [D] Reduced [f] = 1 Max	Armour Acceptance Range	Shroud Size
G16	M20	16	28.0	78.0	3.4	8.4	9.0	13.5	6.7	10.3	0.15 - 1.25	L24
G20S	M20	16	28.0	78.0	7.2	11.7	11.5	16.0	9.4	12.5	0.15 - 1.25	L24
G20	M20	16	33.0	78.0	9.4	14.0	15.5	21.1	12.0	17.6	0.15 - 1.25	EL30
G25	M25	16	41.4	90.0	13.5	20.0	20.3	27.4	16.8	23.9	0.15 - 1.60	EL38
G32	M32	16	50.6	105.0	19.5	26.3	26.7	34.0	23.2	30.5	0.15 - 2.00	EL46
G40	M40	16	60.5	113.0	23.0	32.2	33.0	40.6	28.6	36.2	0.20 - 2.00	EL55
G50S	M50	16	71.5	125.0	28.1	38.2	39.4	46.7	34.8	42.4	0.30 - 2.50	EL65
G50	M50	16	71.5	125.0	33.1	44.1	45.7	53.2	41.1	48.5	0.30 - 2.50	EL65
G63S	M63	19	88.0	125.0	39.2	50.1	52.1	59.5	47.5	54.8	0.30 - 2.50	EL80
G63	M63	19	88.0	125.0	46.7	56.0	58.4	65.8	53.8	61.2	0.30 - 2.50	EL80
G75S	M75	19	99.0	131.0	52.1	62.0	64.8	72.2	60.2	68.0	0.30 - 2.50	EL90
G75	M75	19	99.0	131.0	58.0	68.0	71.1	78.0	66.5	73.4	0.30 - 2.50	EL90

Dimensions in mm

Important Notes

- The gland size does not necessarily equate to the entry thread size.
- In some cases several gland sizes can be chosen due to overlaping inner as well as outer cable diameters. Due to the wide range of armoured cables available, it is necessary to select the correct clamping range. This is achieved by taking the inner and outer clamping range values to determine the best fit (as close as possible to the Min/Max values average).
- All cable glands have a 1.5 mm pitch.
- For Flameproof Ex d applications the female thread into which the gland is to be fitted must achieve an engagement of at least 5 full threads in compliance with clause 5.3 of EN/IEC 60079-1.
- Where KDSU glands are fitted into non-metallic Increased Safety Ex e enclosures they must be included within the earth circuit of the system.
- Fully assembly instructions are supplied with the glands. The instructions must be read prior to installation and adhered to in full.
- When the gland is used to terminate un-armoured cables, the gland is suitable only for fixed installation.

The KDSW glands provide an armour clamp for steel wire, steel tape and lead sheathed cables. An electrical bond between the cable armour and the gland is ensured. In addition, the gland is fitted with two separate sealings to seal the outer and inner cable insulation.
When choosing the gland with a neoprene sealing a temperature range from -20 °C to +85 °C will be achieved, whereas the gland with silicone sealing ensures a temperature range from -60 °C to +180 °C.
With both sealing materials an IP rating of IP 66 and IP 68 to 25 metres (30 min at 2.5 bar) is maintained.
The KDSW gland is approved for Flameproof Ex d and Increased Safety Ex e applications.

Structure of the part description

Order key	[Type]	[a]	[b]	[c]	[d]	[e]	[f]	[ggg]
Example article description	KDSW	M20	B	S	L	SC	1	G16

Meaning

[Type] = Gland type (KDSW)
[a] = Entry thread (M20-M75)
[b] = Material (B = brass)
[c] = Seal material (S = Silicone, N = Neoprene)
[d] = Continuity for lead sheath (L = yes, O = no)
[e] = Plating (SC = self-coloured, NI = Nickel)
[f] = Cable outer sheath (1 = Reduced, 2 = Standard)
[ggg] = Gland size (G16-G75)

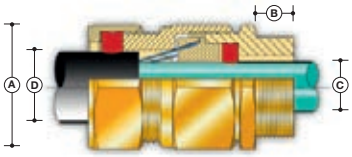

Note Refer to page C.27 Selection Guide Klippon® Cable Glands to determine the suitable order number

Dimensions

Gland Size [ggg]	Entry thread [a]	Entry thread Length [B]	Max Outer Diameter [A]	Max Length	Gland Seal Range: Cable Inner Sheath [C] Min	Cable Inner Sheath [C] Max	Cable Outer Sheath [D] Standard [f] = 2 Min	Standard [f] = 2 Max	Reduced [f] = 1 Min	Reduced [f] = 1 Max	Armour Acceptance Range	Shroud Size
G16	M20	16	26.5	58.0	4.0	8.4	8.4	13.5	4.9	10.0	0.90	L24
G20S	M20	16	26.5	58.0	8.0	11.7	11.5	16.0	9.4	12.5	0.90 - 1.25	L24
G20	M20	16	33.0	58.0	6.7	14.0	15.5	21.1	12.0	17.6	0.90 - 1.25	L30
G25	M25	16	41.4	58.0	13.0	20.0	20.3	27.4	16.8	23.9	1.25 - 1.60	L38
G32	M32	16	50.6	65.0	19.0	26.3	26.7	34.0	23.2	30.5	1.60 - 2.00	L46
G40	M40	16	60.5	72.0	25.0	32.2	33.0	40.6	28.6	36.2	1.60 - 2.00	L55
G50S	M50	16	71.5	73.0	31.5	38.2	39.4	46.7	34.8	42.4	2.00 - 2.50	L65
G50	M50	16	71.5	73.0	36.5	44.1	45.7	53.2	41.1	48.5	2.00 - 2.50	L65
G63S	M63	19	88.0	76.0	42.5	50.1	52.1	59.5	47.5	54.8	2.50	L80
G63	M63	19	88.0	76.0	49.5	56.0	58.4	65.8	53.8	61.2	2.50	L80
G75S	M75	19	99.0	82.0	54.5	62.0	64.8	72.2	60.2	68.0	2.50	L90
G75	M75	19	99.0	82.0	60.5	68.0	71.1	78.0	66.5	73.4	2.5	L90

Dimensions in mm

Important Notes

- The gland size does not necessarily equate to the entry thread size.
- In some cases several gland sizes can be chosen due to overlaping inner as well as outer cable diameters. Due to the wide range of armoured cables available, it is necessary to select the correct clamping range. This is achieved by taking the inner and outer clamping range values to determine the best fit (as close as possible to the Min/Max values average).
- All cable glands have a 1.5 mm pitch.
- For Flameproof Ex d applications the female thread into which the gland is to be fitted must achieve an engagement of at least 5 full threads in compliance with clause 5.3 of EN/IEC 60079-1.
- Where KDSW glands are fitted into non-metallic Increased Safety Ex e enclosures they must be included within the earth circuit of the system.
- Fully assembly instructions are supplied with the glands. The instructions must be read prior to installation and adhered to in full.
- When the gland is used to terminate un-armoured cables, the gland is suitable only for fixed installation.
- KDSW gland size G20 with silicone seal , the silicone inner seal only seals to a minimum of 11 mm and NOT 6.7 mm.

Klippon® KDSX Cable Glands

The KDSX glands provide an armour clamp for braided cables. An electrical bond between the cable armour and the gland is ensured. In addition, the gland is fitted with two separate sealings to seal the outer and inner cable insulation.
The gland maintains a temperature range from -60 °C to +180 °C. With both sealing materials an IP rating of IP 66 and IP 68 to 25 metres (30 min at 2.5 bar) is maintained. The KDSX gland is approved for Flameproof Ex d and Increased Safety Ex e applications.

Structure of the part description

Order key	[Type]	[a]	[b]	[c]	[d]	[e]	[f]	[ggg]
Example article description	KDSX	M20	B	S	0	SC	1	G16

Meaning

[Type] = Gland type (KDSX)
[a] = Entry thread (M20-M75)
[b] = Material (B = brass)
[c] = Seal material (S = Silicone)
[d] = Continuity for lead sheath (L = yes, 0 = no)
[e] = Plating (SC = self-coloured, NI = Nickel)
[f] = Cable outer sheath (1 = Reduced, 2 = Standard)
[ggg] = Gland size (G16-G75)

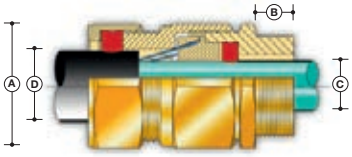

Note Refer to page C.27 Selection Guide Klippon® Cable Glands to determine the suitable order number

Dimensions

Gland Size	Entry thread	Entry thread Length	Max Outer Diameter	Max Length	Gland Seal Range: Cable Inner Sheath [C]		Gland Seal Range: Cable Outer Sheath [D] Standard [f] = 2		Gland Seal Range: Cable Outer Sheath [D] Reduced [f] = 1		Armour Acceptance Range	Shroud Size
[ggg]	[a]	[B]	[A]		Min	Max	Min	Max	Min	Max		
G16	M20	16	26.5	58.0	4.0	8.4	8.4	13.5	4.9	10.0	0.15 - 0.35	L24
G20S	M20	16	26.5	58.0	8.0	11.7	11.5	16.0	9.4	12.5	0.15 - 0.35	L24
G20	M20	16	33.0	58.0	6.7	14.0	15.5	21.1	12.0	17.6	0.15 - 0.50	L30
G25	M25	16	41.4	58.0	13.0	20.0	20.3	27.4	16.8	23.9	0.15 - 0.50	L38
G32	M32	16	50.6	65.0	19.0	26.3	26.7	34.0	23.2	30.5	0.15 - 0.55	L46
G40	M40	16	60.5	72.0	25.0	32.2	33.0	40.6	28.6	36.2	0.20 - 0.60	L55
G50S	M50	16	71.5	73.0	31.5	38.2	39.4	46.7	34.8	42.4	0.20 - 0.60	L65
G50	M50	16	71.5	73.0	36.5	44.1	45.7	53.2	41.1	48.5	0.30 - 0.80	L65
G63S	M63	19	88.0	76.0	42.5	50.1	52.1	59.5	47.5	54.8	0.30 - 0.80	L80
G63	M63	19	88.0	76.0	49.5	56.0	58.4	65.8	53.8	61.2	0.30 - 0.80	L80
G75S	M75	19	99.0	82.0	54.5	62.0	64.8	72.2	60.2	68.0	0.30 - 1.00	L90
G75	M75	19	99.0	82.0	60.5	68.0	71.1	78.0	66.5	73.4	0.30 - 1.00	L90

Dimensions in mm

Important Notes

- The gland size does not necessarily equate to the entry thread size.
- In some cases several gland sizes can be chosen due to overlaping inner as well as outer cable diameters. Due to the wide range of armoured cables available, it is necessary to select the correct clamping range. This is achieved by taking the inner and outer clamping range values to determine the best fit (as close as possible to the Min/Max values average).
- All cable glands have a 1.5 mm pitch.
- For Flameproof Ex d applications the female thread into which the gland is to be fitted must achieve an engagement of at least 5 full threads in compliance with clause 5.3 of EN/IEC 60079-1.
- Where KDSX glands are fitted into non-metallic Increased Safety Ex e enclosures they must be included within the earth circuit of the system.
- Fully assembly instructions are supplied with the glands. The instructions must be read prior to installation and adhered to in full.
- When the gland is used to terminate un-armoured cables, the gland is suitable only for fixed installation.
- KDSX gland size G20 with silicone seal , the silicone inner seal only seals to a minimum of 11 mm and NOT 6.7 mm.

The KSG gland is designed to terminate un-armoured cables. When choosing the gland with a neoprene sealing a temperature range from -20 °C to +85 °C will be achieved, whereas the gland with silicone sealing ensures a temperature range from -60 °C to +180 °C. With both sealing materials an IP rating of IP 66 and IP 68 to 25 metres (30 min. at 2.5 bar) is maintained. The KSG type gland is approved for Flameproof Ex d and Increased Safety Ex e applications.

Structure of the part description

Order key	[Type]	[a]	[b]	[c]	[d]	[e]	[f]	[ggg]
Example article description	KSG	M20	B	S	0	SC	2	G16

Meaning

[Type] = Gland type (KSG)
[a] = Entry thread (M20-M90)
[b] = Material (B = brass)
[c] = Seal material (S = Silicone, N = Neoprene)
[d] = Continuity for lead sheath (L = yes, 0 = no)
[e] = Plating (SC = self-coloured, NI = Nickel)
[f] = Cable outer sheath (2 = Standard)
[ggg] = Gland size (G16-G90)

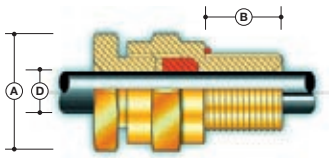

Note Refer to page C.27 Selection Guide Klippon® Cable Glands to determine the suitable order number

Dimensions

Gland Size [ggg]	Entry thread [a]	Entry thread Length [B]	Max Outer Diameter [A]	Max Length	Gland Seal Range: Cable Outer Sheath [D] Standard [f] = 2 Min	Max	Shroud Size
G16	M20	16	28.0	33.0	4.0	8.4	L24
G20S	M20	16	28.0	33.0	7.2	11.7	L24
G20	M20	16	33.0	33.0	9.6	14.0	L30
G25	M25	16	41.4	33.0	13.5	20.0	L38
G32	M32	16	50.6	33.0	19.5	26.3	L46
G40	M40	16	60.5	37.0	23.0	32.2	L55
G50S	M50	16	71.5	37.0	28.2	38.2	L65
G50	M50	16	71.5	37.0	33.2	44.1	L65
G63S	M63	19	88.0	37.0	39.3	50.1	L80
G63	M63	19	88.0	37.0	46.7	56.0	L80
G75S	M75	19	99.0	37.0	52.3	62.0	L90
G75	M75	19	99.0	37.0	58.1	69.0	L90
G85	M85	25	115.2	50	69.1	78.0	L104
G90	M90	25	125.7	50	74.1	84.0	L114

Dimensions in mm

Important Notes

- The gland size does not necessarily equate to the entry thread size.
- In some cases several gland sizes can be chosen due to overlaping inner as well as outer cable diameters. Due to the wide range of armoured cables available, it is necessary to select the correct clamping range. This is achieved by taking the inner and outer clamping range values to determine the best fit (as close as possible to the Min/Max values average).
- All cable glands have a 1.5 mm pitch.
- For Flameproof Ex d applications the female thread into which the gland is to be fitted must achieve an engagement of at least 5 full threads in compliance with clause 5.3 of EN/IEC 60079-1.
- Where KSG glands are fitted into non-metallic Increased Safety Ex e enclosures they must be included within the earth circuit of the system.
- Fully assembly instructions are supplied with the glands. The instructions must be read prior to installation and adhered to in full.
- When the gland is used to terminate un-armoured cables, the gland is suitable only for fixed installation.

Klippon® KUB Cable Glands

The KUB gland provide an armour clamp for steel tape, steel wire and braided cables. An electrical bond between the cable armour and the gland is ensured. The gland can also be used to terminate unarmoured cables. Additionally, the gland provides a single pull resistant seal on the outer sheath of any cable. After clamping the cable armour onto the cone, the cable has to be filled with the provided compound to seal the free spaces between the single conductors.
The gland maintains a temperature range from -60 °C to +85 °C. When filled, the gland fulfills an IP rating of IP 68 to 100 metres (30 Min. at 10 bar). The KUB gland is only suitable for Ex d applications.

Structure of the part description

Order key	[Type]	[a]	[b]	[c]	[d]	[e]	[f]	[ggg]
Example article description	KUB	M20	B	S	0	SC	1	G16

Meaning

[Type] = Gland type (KUB)
[a] = Entry thread (M20-M75)
[b] = Material (B = brass)
[c] = Seal material (S = Silicone)
[d] = Continuity for lead sheath (L = yes, 0 = no)
[e] = Plating (SC = self-coloured, NI = Nickel)
[f] = Cable outer sheath (1 = Reduced, 2 = Standard)
[ggg] = Gland size (G16-G75)

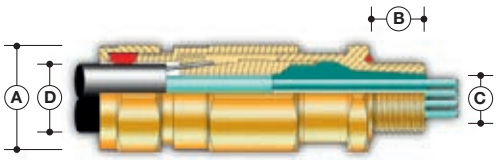

Note Refer to page C.27 Selection Guide Klippon® Cable Glands to determine the suitable order number

Dimensions

Gland Size	Entry thread	Entry thread Length	Max Outer Diameter	Max Length	Gland Seal Range							Armour Acceptance Range	Shroud Size
					Cable Inner Sheath [C]			Cable Outer Sheath [D]					
								Standard [f] = 2		Reduced [f] = 1			
[ggg]	[a]	[B]	[A]		X	Y	Z	Min	Max	Min	Max		
G16	M20	16	28.0	72.0	7	9.0	11.7	9.0	13.5	6.7	10.3	0.15 - 1.25	L24
G20S	M20	16	28.0	72.0	8	10.4	11.7	11.5	16.0	9.4	12.5	0.15 - 1.25	L24
G20	M20	16	33.0	73.0	14	12.5	14.0	15.5	21.1	12.0	17.6	0.15 - 1.25	EL30
G25	M25	16	41.4	83.0	25	17.8	20.0	20.3	27.4	16.8	23.9	0.15 - 1.60	EL38
G32	M32	16	50.6	103.0	50	23.5	26.3	26.7	34.0	23.2	30.5	0.15 - 2.00	EL46
G40	M40	16	60.5	105.0	80	28.8	32.2	33.0	40.6	28.6	36.2	0.20 - 2.00	EL55
G50S	M50	16	71.5	115.0	100	34.2	38.2	39.4	46.7	34.8	42.4	0.30 - 2.50	EL65
G50	M50	16	71.5	115.0	100	39.4	44.1	45.7	53.2	41.1	48.5	0.30 - 2.50	EL65
G63S	M63	19	88.0	115.0	120	44.8	50.1	52.1	59.5	47.5	54.8	0.30 - 2.50	EL80
G63	M63	19	88.0	115.0	120	50.0	56.0	58.4	65.8	53.8	61.2	0.30 - 2.50	EL80
G75S	M75	19	99.0	122.0	140	55.4	62.0	64.8	72.2	60.2	68.0	0.30 - 2.50	EL90
G75	M75	19	99.0	122.0	140	60.8	68.0	71.1	78.0	66.5	73.4	0.30 - 2.50	EL90

Dimensions in mm

Important Notes

- The gland size does not necessarily equate to the entry thread size.
- In some cases several gland sizes can be chosen due to overlaping inner as well as outer cable diameters. Due to the wide range of armoured cables available, it is necessary to select the correct clamping range. This is achieved by taking the inner and outer clamping range values to determine the best fit (as close as possible to the Min/Max values average).
- X = Maximum numbers of cores
- Y = Maximum over cores
- Z = Maximum inner sheath
- All cable glands have a 1.5 mm pitch.
- For Flameproof Ex d applications the female thread into which the gland is to be fitted must achieve an engagement of at least 5 full threads in compliance with clause 5.3 of EN/IEC 60079-1.
- Where KUB glands are fitted into non-metallic Increased Safety Ex e enclosures they must be included within the earth circuit of the system
- Fully assembly instructions are supplied with the glands. The instructions must be read prior to installation and adhered to in full.
- When the gland is used to terminate un-armoured cables, the gland is suitable only for fixed installation

Selection Guide Klippon® Cable Glands

Purpose: Generation of the article description

By selecting the suitable cable gland different factors have to be considered, such as
- The environment of the application
- The conditions inside the enclosure
- The construction of the cable

By using the Selection Guide Klippon® Cable Glands the article description will be generated following the step by step process to create the 7 character order key. From this the order number can be identified.

The order key consists out of the following attributes:

Order key	[Type]	[a]	[b]	[c]	[d]	[e]	[f]	[ggg]
Example Article Description	KDSU	M20	B	S	0	SC	1	G16

Meaning

[Type]	=	Gland type (KDSU, KDSW, KDSX, KSG, KUB)
[a]	=	Entry thread (M20-M75)
[b]	=	Material (B = brass)
[c]	=	Seal material (S=Silicone, N=Neoprene)
[d]	=	Continuity for lead sheath (L = yes, 0 = no)
[e]	=	Plating (SC = self-coloured, NI = nickel-plated
[f]	=	Cable outer sheath (1 = Reduced, 2 = Standard)
[ggg]	=	Gland size (G16-G75)

Application example

Within an Ex d application on an Off-Shore platform a suitable cable gland for the termination into an enclosure is required.
Following details about the application are given:

- The enclosure will be used for the control of a motor circuit breaker
- The enclosure has a volume of 1.3 dm^3 and is installed outdoor.
- The application is in the field, a place in which an explosive atmosphere is likely to occur in normal operation, occasionally (Zone 1)
- The surrounding atmosphere of the enclosure consists Ethylene (gas group IIB)
- The enclosure operates in a temperature range of -25 °C to +45 °C
- The armour of the cable is unknown, no lead sheathed cable
- The cable outer sheath diameter is 10 mm
- The cable inner sheath diameter is 8 mm

Based on the information in the above shown example case the article description will be determined on the following pages.

1. Selection of the cable gland type [type] and continuity for lead sheath [d]

Order key	[Type]	[a]	[b]	[c]	[d]	[e]	[f]	[ggg]
Example Article Description								

1a) Selection of the cable gland type in regard to the ignition protection type

[Type]	Ignition Protecion Type
KDSU	Ex d / Ex e
KDSW	Ex d / Ex e
KDSX	Ex d / Ex e
KSG	Ex d / Ex e
KUB	Ex d

Because it is an Ex d application all cable gland types (marked in blue) can come into consideration.
For Ex d applications the following questionnaire according to the IEC 60079-14 standard has to be passed to find out if a barrier gland ([Type]=KUB) or if a cable gland with a sealing ring ([Type]=KDSU,KDSW,KDSX) has to be used.

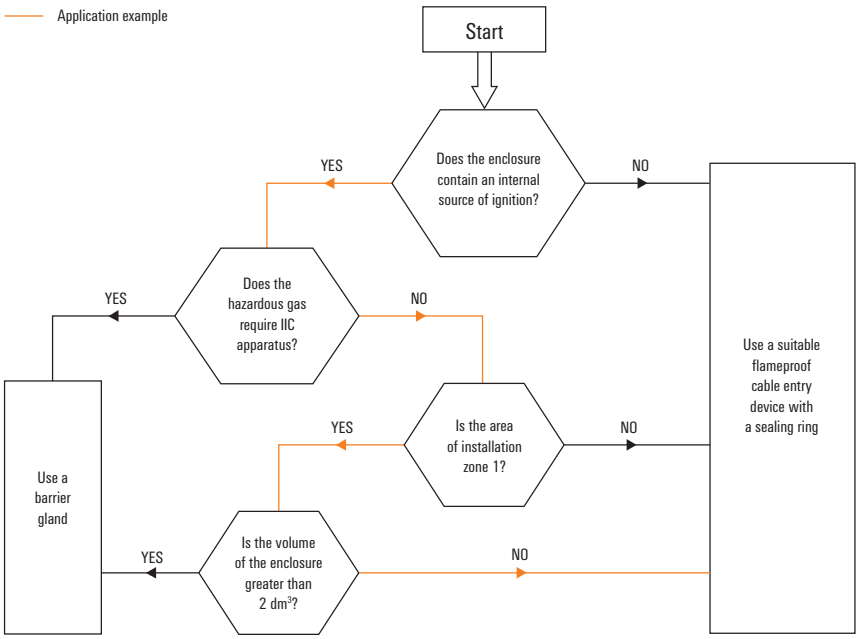

By passing this questionnaire with the given information of the example case the orange marked way has to be followed and the result is that a cable gland with sealing ring has to be used. Consequently the blue marked cable gland types below can come into consideration.

Gland type	Type of sealing
KDSU	Sealing ring
KDSW	Sealing ring
KDSX	Sealing ring
KSG	Sealing ring
KUB	Compound

1b) Selection of the cable gland type in regard to the continuity for lead sheath

[Type]	[d]	Continuity for lead sheath
KDSU	0	No
KDSW	L / 0	Yes
KDSX	0	No
KSG	0	No
KUB	0	No

In the example case a cable without lead sheath is to be terminated, therefore the option to clamp a lead sheathed cable is not needed.
Consequently is

[d] = 0

All four gland types marked in blue can be used.

1c) Selection of the cable gland type in regard to the type of armour

[Type]	Armour
KDSU	Universal
KDSW	Steel wire, steel tape
KDSX	Braided
KSG	No armour
KUB	Universal

Because the type of armour of the cable is unknown, the cable gland type KDSU has to be selected.
Consequently is

[Type] = KDSU

The generated information has to be filled into the order key below:

Order key	**[Type]**	[a]	[b]	[c]	**[d]**	[e]	[f]	[ggg]
Example Article Description	**KDSU**				**0**			

2. Selection of the material [b], the sealing material [c] and the plating [e] of the cable gland

Order key	[Type]	[a]	[b]	[c]	[d]	[e]	[f]	[ggg]
Example Article Description	KDSU				O			

2a) Selection of the material [b]

All cable gland types are made from brass "b". Other materials can also be provided upon request.
Consequently is
[b] = B

2b) Selection of the sealing material [c] based on the required temperature range

The cable glands can be ordered with either a neoprene seal "N" or a silicone seal "S".
Glands with a neoprene seal can be used in a temperature range from -20 °C to +85 °C, whereas glands with silicone seal maintain a temperature range from -60 °C to +180 °C. (KUB glands are certified to a temperature of -60 °C to +85 °C).

[Type]	[c]	Seal material
KDSU	N,S	Neoprene, Silicone
KDSW	N,S	Neoprene (with continuity for lead sheath), Silicone
KDSX	S	Silicone
KSG	N,S	Neoprene, Silicone
KUB	N	Silicone (-60 °C to +85 °C)

Because the enclosure in the example case operates in a temperature range of -25 °C to +45 °C, a cable gland with a silicone seal has to be used.
Consequently is
[c] = „S" (Silicone)

2c) Selection of the plating [e]

All cable glands can be provided either with nickel plated surface "NI" or with self-coloured surface "SC".

In the example case the enclosure is used outdoor, therefore it can come into contact with water in form of rain, so that a cable gland with nickel plated surface as protection against corrosion and wear has to be selected. Consequently is [e] = „NI"

The generated information has to be filled into the order key below:

Order key	[Type]	[a]	[b]	[c]	[d]	[e]	[f]	[ggg]
Example Article Description	KDSU		B	S	O	NI		

3. Selection of the entry thread [a], the cable outer sheath variant [f] and the gland size [ggg]

Order key	[Type]	[a]	[b]	[c]	[d]	[e]	[f]	[ggg]
Example Article Description	KDSU		B	S	O	NI		

The suitable gland size [ggg] will be selected based on the inner and outer sheath diameters of the cable. Thereby the entry thread size [a] and the cable outer sheath variant [f] result.

In the example case the following diameters are given:

Cable Outer Sheath: 10 mm (By looking into the below shown dimensions chart of the KDSU the orange marked clamping ranges (Cable Outer Sheath [D]) can be selected).
Cable Inner Sheath: 8 mm (By looking into the below shown dimensions chart of the KDSU the orange marked clamping ranges (Cable Inner Sheath [C]) can be selected).

Dimensions

Gland Size	Entry thread	Entry thread Length	Max Outer Diameter	Max Length	Gland Seal Range						Armour Acceptance Range	Shroud Size
					Cable Inner Sheath [C]		Cable Outer Sheath [D]					
							Standard [f]=2		Reduced [f]=1			
[ggg]		[B]	[A]		Min	Max	Min	Max	Min	Max		
G16	M20	16	28.0	78.0	3.4	8.4	9.0	13.5	6.7	10.3	0.15 - 1.25	L24
G20S	M20	16	28.0	78.0	7.2	11.7	11.5	16.0	9.4	12.5	0.15 - 1.25	L24
G20	M20	16	33.0	78.0	9.4	14.0	15.5	21.1	12.0	17.6	0.15 - 1.25	EL30
G25	M25	16	41.4	90.0	13.5	20.0	20.3	27.4	16.8	23.9	0.15 - 1.60	EL38
G32	M32	16	50.6	105.0	19.5	26.3	26.7	34.0	23.2	30.5	0.15 - 2.00	EL46
G40	M40	16	60.5	113.0	23.0	32.2	33.0	40.6	28.6	36.2	0.20 - 2.00	EL55
G50S	M50	16	71.5	125.0	28.1	38.2	39.4	46.7	34.8	42.4	0.30 - 2.50	EL65
G50	M50	16	71.5	125.0	33.1	44.1	45.7	53.2	41.1	48.5	0.30 - 2.50	EL65
G63S	M63	19	88.0	125.0	39.2	50.1	52.1	59.5	47.5	54.8	0.30 - 2.50	EL80
G63	M63	19	88.0	125.0	46.7	56.0	58.4	65.8	53.8	61.2	0.30 - 2.50	EL80
G75S	M75	19	99.0	131.0	52.1	62.0	64.8	72.2	60.2	68.0	0.30 - 2.50	EL90
G75	M75	19	99.0	131.0	58.0	68.0	71.1	78.0	66.5	73.4	0.30 - 2.50	EL90
		All dimensions in mm										

By the selection of the inner [C] resp. outer [D] clamping range, a range should be used where the diameter of the cable outer and inner sheath are as near as possible to the average of the Min/Max Values. In doing so, the reduced cable outer sheath with the gland size G20S and the entry thread of M20 has to be selected.

Consequently is
[f]=1
[ggg]=G20S
[a]=M20

The generated information has to be filled into the order key below:

Order key	[Type]	[a]	[b]	[c]	[d]	[e]	[f]	[ggg]
Article description	KDSU	M20	B	S	0	NI	1	G20S

Resulting from the complete article description the relating order number (brown marked) can be determined.

Extract from table KDSU "Nickel-plated brass gland with silicone sealing" on page C.33

Order No.	Description	[Type]	[a]	[b]	[c]	[d]	[e]	[f]	[ggg]	Qty.
0930001221	KDSU M20 BS 0 NI 1 G16	KDSU	M20	B	S	0	NI	1	G16	20
0930001222	KDSU M20 BS 0 NI 2 G16	KDSU	M20	B	S	0	NI	2	G16	20
0930011223	KDSU M20 BS 0 NI 1 G20S	KDSU	M20	B	S	0	NI	1	G20S	20
0930011224	KDSU M20 BS 0 NI 2 G20S	KDSU	M20	B	S	0	NI	2	G20S	20
0930021221	KDSU M20 BS 0 NI 1 G20	KDSU	M20	B	S	0	NI	1	G20	20
...	...	...	...	...	...	...	...	...	...	...

Klippon® cable glands - Brass - Ex e, Ex d, IP 68 for armoured and non-armoured cables

All-purpose cable gland for cables and lines with single-wire armouring, metal-foil armouring and braided armouring. Non-armoured cables and lines can also be connected.

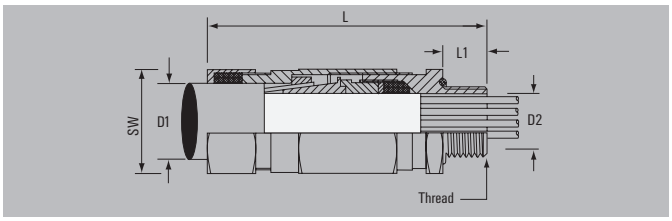

Technical data

Material	Brass
O-Ring / Seal insert	NBR / CR
Temperature range	-20 °C...85 °C
Degree of protection	IP 68 - 2.5 bar
Water depth	25 m (30 Min.)
Type of armouring	Single-wire armouring, Metal foil armouring, Braided armouring
Approval	ATEX II 2 GD, Ex d IIC / Ex e II / Ex tD A21 IP68, IECEx Ex d IIC / Ex e II

Note

Ordering data

Typ	Thread	D1 outer cable Ø	D2 inner cable Ø	Cable armour	L/L1	SW	MODR	SUHB	Qty.	Order No.
metric, brass										
KDSU M20 BN 0 SC 1 G16	M 20 / 1.5	6.70-10.30	3.40-8.40	0.15-1.25	78 / 16	24	32.5	L24	20	**1076120000**
KDSU M20 BN 0 SC 2 G16	M 20 / 1.5	9.00-13.50	3.40-8.40	0.15-1.25	78 / 16	24	32.5	L24	20	**1909260000**
KDSU M20 BN 0 SC 1 G20S	M 20 / 1.5	9.40-12.50	7.20-11.70	0.15-1.25	78 / 16	24	32.5	L24	20	**1076130000**
KDSU M20 BN 0 SC 2 G20S	M 20 / 1.5	11.50-16.00	7.20-11.70	0.15-1.25	78 / 16	24	32.5	L24	20	**1909290000**
KDSU M20 BN 0 SC 1 G20	M 20 / 1.5	12.00-17.60	9.40-14.00	0.15-1.25	78 / 16	30	32.5	EL30	20	**1076140000**
KDSU M20 BN 0 SC 2 G20	M 20 / 1.5	15.50-21.10	9.40-14.00	0.15-1.25	78 / 16	30	32.5	EL30	20	**1909300000**
KDSU M25 BN 0 SC 1 G25	M 25 / 1.5	16.80-23.90	13.50-20.00	0.15-1.6	90 / 16	38	50	EL38	20	**1076150000**
KDSU M25 BN 0 SC 2 G25	M 25 / 1.5	20.30-27.40	13.50-20.00	0.15-1.6	90 / 16	38	50	EL38	20	**1909310000**
KDSU M32 BN 0 SC 1 G32	M 32 / 1.5	23.20-30.50	19.50-26.30	0.15-2	105 / 16	46	80	EL46	10	**1076160000**
KDSU M32 BN 0 SC 2 G32	M 32 / 1.5	26.70-34.00	19.50-26.30	0.15-2	105 / 16	46	80	EL46	10	**1909320000**
KDSU M40 BN 0 SC 1 G40	M 40 / 1.5	28.60-36.20	23.00-32.20	0.2-2	113 / 16	55	80	EL55	10	**1076170000**
KDSU M40 BN 0 SC 2 G40	M 40 / 1.5	33.00-40.60	23.00-32.20	0.2-2	113 / 16	55	80	EL55	10	**1909330000**
KDSU M50 BN 0 SC 1 G50S	M 50 / 1.5	34.80-42.40	28.10-38.20	0.3-2.5	125 / 16	65	100	EL65	1	**1076180000**
KDSU M50 BN 0 SC 2 G50S	M 50 / 1.5	39.40-46.70	28.10-38.20	0.3-2.5	125 / 16	65	100	EL65	1	**1909340000**
KDSU M50 BN 0 SC 1 G50	M 50 / 1.5	41.10-48.50	33.10-44.10	0.3-2.5	125 / 16	65	100	EL65	1	**1076190000**
KDSU M50 BN 0 SC 2 G50	M 50 / 1.5	45.70-53.20	33.10-44.10	0.3-2.5	125 / 16	65	100	EL65	1	**1909350000**
KDSU M63 BN 0 SC 1 G63S	M 63 / 1.5	47.50-54.80	39.20-50.10	0.3-2.5	125 / 19	80	160	EL80	1	**1076200000**
KDSU M63 BN 0 SC 2 G63S	M 63 / 1.5	52.10-59.50	39.20-50.10	0.3-2.5	125 / 19	80	160	EL80	1	**1909360000**
KDSU M63 BN 0 SC 1 G63	M 63 / 1.5	53.80-61.20	46.70-56.00	0.3-2.5	125 / 19	80	160	EL80	1	**1076210000**
KDSU M63 BN 0 SC 2 G63	M 63 / 1.5	58.40-65.80	46.70-56.00	0.3-2.5	125 / 19	80	160	EL80	1	**1909370000**
KDSU M75 BN 0 SC 1 G75S	M 75 / 1.5	60.20-68.00	52.10-62.00	0.3-2.5	131 / 19	90	200	EL90	1	**1076220000**
KDSU M75 BN 0 SC 2 G75S	M 75 / 1.5	64.80-72.20	52.10-62.00	0.3-2.5	131 / 19	90	200	EL90	1	**1076230000**
KDSU M75 BN 0 SC 1 G75	M 75 / 1.5	66.50-73.40	58.00-68.00	0.3-2.5	131 / 19	90	200	EL90	1	**1076240000**
KDSU M75 BN 0 SC 2 G75	M 75 / 1.5	71.10-78.00	58.00-68.00	0.3-2.5	131 / 19	90	200	EL90	1	**1076260000**

Note

- All cable glands have a thread pitch of 1.5 mm.
- In the case of Ex d applications, the inner threads used for cable glands must meet the requirements of section 5.3 of EN/IEC 60079-1. In the screwed in position, at least 5 threads must be engaged.
- If the cable glands are installed in non-metallic Ex e connection equipment, these must be connected to the protective earth of the system.
- The connection cable must be laid securely and inflexibly to rule out tensile stress.

Klippon® cable glands - Brass - Ex e, Ex d, IP 68 for armoured and non-armoured cables

All-purpose cable gland for cables and lines with single-wire armouring, metal-foil armouring and braided armouring. Non-armoured cables and lines can also be connected.

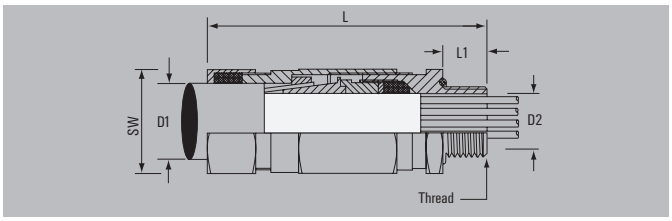

Technical data

Material	Brass, nickel-plated
O-Ring / Seal insert	NBR / CR
Temperature range	-20 °C...85 °C
Degree of protection	IP 68 - 2.5 bar
Water depth	25 m (30 Min.)
Type of armouring	Single-wire armouring, Metal foil armouring, Braided armouring
Approval	ATEX II 2 GD, Ex d IIC / Ex e II / Ex tD A21 IP68, IECEx Ex d IIC / Ex e II

Note

Ordering data

Typ	Thread	D1 outer cable Ø	D2 inner cable Ø	Cable armour	L/L1	SW	MODR	SUHB	Qty.	Order No.
metric, nickel-plated brass										
KDSU M20 BN O NI 1 G16	M 20 / 1.5	6.70-10.30	3.40-8.40	0.15-1.25	78 / 16	24	32.5	L24	20	**1083280000**
KDSU M20 BN O NI 2 G16	M 20 / 1.5	9.00-13.50	3.40-8.40	0.15-1.25	78 / 16	24	32.5	L24	20	**1911380000**
KDSU M20 BN O NI 1 G20S	M 20 / 1.5	9.40-12.50	7.20-11.70	0.15-1.25	78 / 16	24	32.5	L24	20	**1083290000**
KDSU M20 BN O NI 2 G20S	M 20 / 1.5	11.50-16.00	7.20-11.70	0.15-1.25	78 / 16	24	32.5	L24	20	**1911390000**
KDSU M20 BN O NI 1 G20	M 20 / 1.5	12.00-17.60	9.40-14.00	0.15-1.25	78 / 16	30	32.5	EL30	20	**1083320000**
KDSU M20 BN O NI 2 G20	M 20 / 1.5	15.50-21.10	9.40-14.00	0.15-1.25	78 / 16	30	32.5	EL30	20	**1911400000**
KDSU M25 BN O NI 1 G25	M 25 / 1.5	16.80-23.90	13.50-20.00	0.15-1.6	90 / 16	38	50	EL38	20	**1083330000**
KDSU M25 BN O NI 2 G25	M 25 / 1.5	20.30-27.40	13.50-20.00	0.15-1.6	90 / 16	38	50	EL38	20	**1911420000**
KDSU M32 BN O NI 1 G32	M 32 / 1.5	23.20-30.50	19.50-26.30	0.15-2	105 / 16	46	80	EL46	10	**1083340000**
KDSU M32 BN O NI 2 G32	M 32 / 1.5	26.70-34.00	19.50-26.30	0.15-2	105 / 16	46	80	EL46	10	**1911430000**
KDSU M40 BN O NI 1 G40	M 40 / 1.5	28.60-36.20	23.00-32.20	0.2-2	113 / 16	55	80	EL55	10	**1083350000**
KDSU M40 BN O NI 2 G40	M 40 / 1.5	33.00-40.60	23.00-32.20	0.2-2	113 / 16	55	80	EL55	10	**1911440000**
KDSU M50 BN O NI 1 G50	M 50 / 1.5	41.10-48.50	33.10-44.10	0.3-2.5	125 / 16	65	100	EL65	1	**1083370000**
KDSU M50 BN O NI 2 G50	M 50 / 1.5	45.70-53.20	33.10-44.10	0.3-2.5	125 / 16	65	100	EL65	1	**1911460000**
KDSU M50 BN O NI 1 G50S	M 50 / 1.5	34.80-42.40	28.10-38.20	0.3-2.5	125 / 16	65	100	EL65	1	**1083360000**
KDSU M50 BN O NI 2 G50S	M 50 / 1.5	39.40-46.70	28.10-38.20	0.3-2.5	125 / 16	65	100	EL65	1	**1911450000**
KDSU M63 BN O NI 1 G63S	M 63 / 1.5	47.50-54.80	39.20-50.10	0.3-2.5	125 / 19	80	160	EL80	1	**1083380000**
KDSU M63 BN O NI 2 G63S	M 63 / 1.5	52.10-59.50	39.20-50.10	0.3-2.5	125 / 19	80	160	EL80	1	**1911480000**
KDSU M63 BN O NI 1 G63	M 50 / 1.5	53.80-61.20	46.70-56.00	0.3-2.5	125 / 16	80	160	EL80	1	**1083390000**
KDSU M63 BN O NI 2 G63	M 63 / 1.5	58.40-65.80	46.70-56.00	0.3-2.5	125 / 19	80	160	EL80	1	**1911490000**
KDSU M75 BN O NI 1 G75S	M 75 / 1.5	60.20-68.00	52.10-62.00	0.3-2.5	131 / 19	90	200	EL90	1	**1083400000**
KDSU M75 BN O NI 2 G75S	M 75 / 1.5	64.80-72.20	52.10-62.00	0.3-2.5	131 / 19	90	200	EL90	1	**1083410000**
KDSU M75 BN O NI 1 G75	M 75 / 1.5	66.50-73.40	58.00-68.00	0.3-2.5	131 / 19	90	200	EL90	1	**1083420000**
KDSU M75 BN O NI 2 G75	M 75 / 1.5	71.10-78.00	58.00-68.00	0.3-2.5	131 / 19	90	200	EL90	1	**1083430000**

Note

- All cable glands have a thread pitch of 1.5 mm.
- In the case of Ex d applications, the inner threads used for cable glands must meet the requirements of section 5.3 of EN/IEC 60079-1. In the screwed in position, at least 5 threads must be engaged.
- If the cable glands are installed in non-metallic Ex e connection equipment, these must be connected to the protective earth of the system.
- The connection cable must be laid securely and inflexibly to rule out tensile stress.

Klippon® cable glands - Brass - Ex e, Ex d, IP 68 for armoured and non-armoured cables

All-purpose cable gland for cables and lines with single-wire armouring, metal-foil armouring and braided armouring. Non-armoured cables and lines can also be connected.

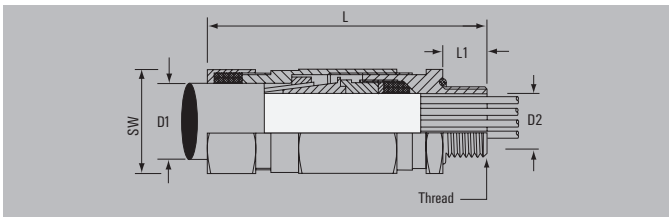

Technical data

Material	Brass
O-Ring / Seal insert	Silicone / Silicone
Temperature range	-60 °C...180 °C
Degree of protection	IP 68 - 2.5 bar
Water depth	25 m (30 Min.)
Type of armouring	Single-wire armouring, Metal foil armouring, Braided armouring
Approval	ATEX II 2 GD, Ex d IIC / Ex e II / Ex tD A21 IP68, IECEx Ex d IIC / Ex e II

Note

Ordering data

Typ	Thread	D1 outer cable Ø	D2 inner cable Ø	Cable armour	L/L1	SW	MODR	SUHB	Qty.	Order No.
metric, brass										
KDSU M20 BS 0 SC 1 G16	M 20 / 1.5	6.70-10.30	3.40-8.40	0.15-1.25	78 / 16	24	32.5	L24	20	**0930001211**
KDSU M20 BS 0 SC 2 G16	M 20 / 1.5	9.00-13.50	3.40-8.40	0.15-1.25	78 / 16	24	32.5	L24	20	**0930001212**
KDSU M20 BS 0 SC 1 G20S	M 20 / 1.5	9.40-12.50	7.20-11.70	0.15-1.25	78 / 16	24	32.5	L24	20	**0930011213**
KDSU M20 BS 0 SC 2 G20S	M 20 / 1.5	11.50-16.00	7.20-11.70	0.15-1.25	78 / 16	24	32.5	L24	20	**0930011214**
KDSU M20 BS 0 SC 1 G20	M 20 / 1.5	12.00-17.60	9.40-14.00	0.15-1.25	78 / 16	30	32.5	EL30	20	**0930021211**
KDSU M20 BS 0 SC 2 G20	M 20 / 1.5	15.50-21.10	9.40-14.00	0.15-1.25	78 / 16	30	32.5	EL30	20	**0930021212**
KDSU M25 BS 0 SC 1 G25	M 25 / 1.5	16.80-23.90	13.50-20.00	0.15-1.6	90 / 16	38	50	EL38	20	**0930031211**
KDSU M25 BS 0 SC 2 G25	M 25 / 1.5	20.30-27.40	13.50-20.00	0.15-1.6	90 / 16	38	50	EL38	20	**0930031212**
KDSU M32 BS 0 SC 1 G32	M 32 / 1.5	23.20-30.50	19.50-26.30	0.15-2	105 / 16	46	80	EL46	10	**0930041211**
KDSU M32 BS 0 SC 2 G32	M 32 / 1.5	26.70-34.00	19.50-26.30	0.15-2	105 / 16	46	80	EL46	10	**0930041212**
KDSU M40 BS 0 SC 1 G40	M 40 / 1.5	28.60-36.20	23.00-32.20	0.2-2	113 / 16	55	80	EL55	10	**1136870000**
KDSU M40 BS 0 SC 2 G40	M 40 / 1.5	33.00-40.60	23.00-32.20	0.2-2	113 / 16	55	80	EL55	10	**0930051212**
KDSU M50 BS 0 SC 1 G50S	M 50 / 1.5	34.80-42.20	28.10-38.20	0.3-2.5	125 / 16	65	100	EL65	1	**0930061213**
KDSU M50 BS 0 SC 2 G50S	M 50 / 1.5	39.40-46.70	28.10-38.20	0.3-2.5	125 / 16	65	100	EL65	1	**1136880000**
KDSU M50 BS 0 SC 1 G50	M 50 / 1.5	41.10-48.50	33.10-44.10	0.3-2.5	125 / 16	65	100	EL65	1	**1136890000**
KDSU M50 BS 0 SC 2 G50	M 50 / 1.5	45.70-53.20	33.10-44.10	0.3-2.5	125 / 16	65	100	EL65	1	**1136910000**
KDSU M63 BS 0 SC 1 G63S	M 63 / 1.5	47.50-54.80	39.20-50.10	0.3-2.5	125 / 19	80	160	EL80	1	**1136920000**
KDSU M63 BS 0 SC 2 G63S	M 63 / 1.5	52.10-59.50	39.20-50.10	0.3-2.5	125 / 19	80	160	EL80	1	**1136930000**
KDSU M63 BS 0 SC 1 G63	M 63 / 1.5	53.80-61.20	46.70-56.00	0.3-2.5	125 / 19	80	160	EL80	1	**1136940000**
KDSU M63 BS 0 SC 2 G63	M 63 / 1.5	58.40-65.80	46.70-56.00	0.3-2.5	125 / 19	80	160	EL80	1	**1136950000**
KDSU M75 BS 0 SC 1 G75	M 75 / 1.5	66.50-73.40	58.00-68.00	0.3-2.5	131 / 19	90	200	EL90	1	**1136980000**
KDSU M75 BS 0 SC 2 G75	M 75 / 1.5	71.10-78.00	58.00-68.00	0.3-2.5	131 / 19	90	200	EL90	1	**0930111212**
KDSU M75 BS 0 SC 1 G75S	M 75 / 1.5	60.20-68.00	52.10-62.00	0.3-2.5	131 / 19	90	200	EL90	1	**1136960000**
KDSU M75 BS 0 SC 2 G75S	M 75 / 1.5	64.80-72.20	52.10-62.00	0.3-2.5	131 / 19	90	200	EL90	1	**1136970000**

Note

- All cable glands have a thread pitch of 1.5 mm.
- In the case of Ex d applications, the inner threads used for cable glands must meet the requirements of section 5.3 of EN/IEC 60079-1. In the screwed in position, at least 5 threads must be engaged.
- If the cable glands are installed in non-metallic Ex e connection equipment, these must be connected to the protective earth of the system.
- The connection cable must be laid securely and inflexibly to rule out tensile stress.

Klippon® cable glands - Brass - Ex e, Ex d, IP 68 for armoured and non-armoured cables

All-purpose cable gland for cables and lines with single-wire armouring, metal-foil armouring and braided armouring. Non-armoured cables and lines can also be connected.

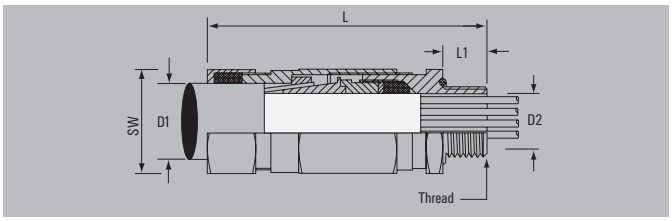

Technical data

Material	Brass, nickel-plated
O-Ring / Seal insert	Silicone / Silicone
Temperature range	-60 °C...180 °C
Degree of protection	IP 68 - 2.5 bar
Water depth	25 m (30 Min.)
Type of armouring	Single-wire armouring, Metal foil armouring, Braided armouring
Approval	ATEX II 2 GD, Ex d IIC / Ex e II / Ex tD A21 IP68, IECEx Ex d IIC / Ex e II

Note

Ordering data

Typ	Thread	D1 outer cable Ø	D2 inner cable Ø	Cable armour	L/L1	SW	MODR	SUHB	Qty.	Order No.
metric, nickel-plated brass										
KDSU M20 BS O NI 1 G16	M 20 / 1.5	6.70-10.30	3.40-8.40	0.15-1.25	78 / 16	24	32.5	L24	20	**0930001221**
KDSU M20 BS O NI 2 G16	M 20 / 1.5	9.00-13.50	3.40-8.40	0.15-1.25	78 / 16	24	32.5	L24	20	**0930001222**
KDSU M20 BS O NI 1 G20	M 20 / 1.5	12.00-17.60	9.40-14.00	0.15-1.25	78 / 16	30	32.5	EL30	20	**0930021221**
KDSU M20 BS O NI 2 G20	M 20 / 1.5	15.50-21.10	9.40-14.00	0.15-1.25	78 / 16	30	32.5	EL30	20	**0930021222**
KDSU M20 BS O NI 1 G20S	M 20 / 1.5	9.40-12.50	7.20-11.70	0.15-1.25	78 / 16	24	32.5	L24	20	**0930011223**
KDSU M20 BS O NI 2 G20S	M 20 / 1.5	11.50-16.00	7.20-11.70	0.15-1.25	78 / 16	24	32.5	L24	20	**0930011224**
KDSU M25 BS O NI 1 G25	M 25 / 1.5	16.80-23.90	13.50-20.00	0.15-1.6	90 / 16	38	50	EL38	20	**0930031221**
KDSU M25 BS O NI 2 G25	M 25 / 1.5	20.30-27.40	13.50-20.00	0.15-1.6	90 / 16	38	50	EL38	20	**0930031222**
KDSU M32 BS O NI 1 G32	M 32 / 1.5	23.20-30.50	19.50-26.30	0.15-2	105 / 16	46	80	EL46	10	**0930041221**
KDSU M32 BS O NI 2 G32	M 32 / 1.5	26.70-34.00	19.50-26.30	0.15-2	105 / 16	46	80	EL46	10	**0930041222**
KDSU M40 BS O NI 1 G40	M 40 / 1.5	28.60-36.20	23.00-32.20	0.2-2	113 / 16	55	80	EL55	10	**1136990000**
KDSU M40 BS O NI 2 G40	M 40 / 1.5	33.00-40.60	23.00-32.20	0.2-2	113 / 16	55	80	EL55	10	**0930051222**
KDSU M50 BS O NI 1 G50	M 50 / 1.5	41.10-48.50	33.10-44.10	0.3-2.5	125 / 16	65	100	EL65	1	**1137010000**
KDSU M50 BS O NI 2 G50	M 50 / 1.5	45.70-53.20	33.10-44.10	0.3-2.5	125 / 16	65	100	EL65	1	**1137020000**
KDSU M50 BS O NI 1 G50S	M 50 / 1.5	34.80-42.40	28.10-38.20	0.3-2.5	125 / 16	65	100	EL65	1	**1137000000**
KDSU M50 BS O NI 2 G50S	M 50 / 1.5	39.40-46.70	28.10-38.20	0.3-2.5	125 / 16	65	100	EL65	1	**0930061224**
KDSU M63 BS O NI 1 G63	M 63 / 1.5	53.80-61.20	46.70-56.00	0.3-2.5	125 / 19	80	160	EL80	1	**1137050000**
KDSU M63 BS O NI 2 G63	M 63 / 1.5	58.40-65.80	46.70-56.00	0.3-2.5	125 / 19	80	160	EL80	1	**0930091222**
KDSU M63 BS O NI 1 G63S	M 63 / 1.5	47.50-54.80	39.20-50.10	0.3-2.5	125 / 19	80	160	EL80	1	**1137030000**
KDSU M63 BS O NI 2 G63S	M 63 / 1.5	52.10-59.50	39.20-50.10	0.3-2.5	125 / 19	80	160	EL80	1	**1137040000**
KDSU M75 BS O NI 1 G75	M 75 / 1.5	66.50-73.40	58.00-68.00	0.3-2.5	131 / 19	90	200	EL90	1	**1137080000**
KDSU M75 BS O NI 2 G75	M 75 / 1.5	71.10-78.00	58.00-68.00	0.3-2.5	131 / 19	90	200	EL90	1	**1137090000**
KDSU M75 BS O NI 1 G75S	M 75 / 1.5	60.20-68.00	52.10-62.00	0.3-2.5	131 / 19	90	200	EL90	1	**1137060000**
KDSU M75 BS O NI 2 G75S	M 75 / 1.5	64.80-72.20	52.10-62.00	0.3-2.5	131 / 19	90	200	EL90	1	**1137070000**

Note

- All cable glands have a thread pitch of 1.5 mm.
- In the case of Ex d applications, the inner threads used for cable glands must meet the requirements of section 5.3 of EN/IEC 60079-1. In the screwed in position, at least 5 threads must be engaged.
- If the cable glands are installed in non-metallic Ex e connection equipment, these must be connected to the protective earth of the system.
- The connection cable must be laid securely and inflexibly to rule out tensile stress.

Klippon® cable glands - Brass - Ex e, Ex d, IP 66 / IP 68 for armoured cables

Cable gland for cables and lines with single-wire armouring.

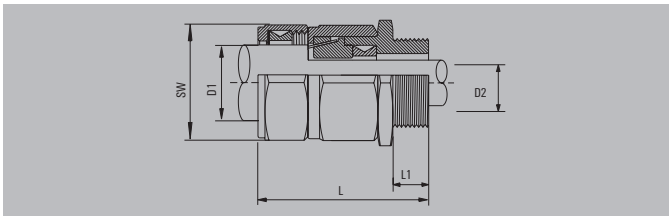

Technical data

Material	Brass
Seal insert	CR
Temperature range	-20 °C...85 °C
Protection degree	IP 54
Protection degree with GWDR	IP 66, IP 68 - 2.5 bar
Water depth	25 m (30 Min.)
Type of armouring	Single-wire armouring
Approval	ATEX II 2 GD, Ex d IIC / Ex e II / Ex tD A21 IP68, IECEx Ex d IIC / Ex e II

Note IP protection without GWDR is IP 54. To achieve IP 66/68 protection, a nylon GWDR must be ordered separately.

Ordering data

Typ	Thread	D1 outer cable Ø	D2 inner cable Ø	Cable armour	L/L1	SW	MODR	SUHB	Qty.	Order No.
metric, brass										
KDSW M20 BN 0 SC 1 G16	M 20 / 1.5	4.90-10.00	4.00-8.40	0.9	58 / 16	24	32.5	L24	20	**1074480000**
KDSW M20BN 0 SC 2 G16	M 20 / 1.5	8.40-13.50	4.00-8.40	0.9	58 / 16	24	32.5	L24	20	**1074490000**
KDSW M20 BN 0 SC 1 G20S	M 20 / 1.5	9.40-12.50	8.00-11.70	0.9-1.25	58 / 16	30	32.5	L24	20	**1074500000**
KDSW M20 BN 0 SC 2 G20S	M 20 / 1.5	11.50-16.00	8.00-11.70	0.9-1.25	58 / 16	30	32.5	L24	20	**1074510000**
KDSW M20 BN 0 SC 1 G20	M 20 / 1.5	12.00-17.60	6.70-14.00	0.9-1.25	58 / 16	24	32.5	L30	20	**1074520000**
KDSW M20 BN 0 SC 2 G20	M 20 / 1.5	15.50-21.10	6.70-14.00	0.9-1.25	58 / 16	24	32.5	L30	20	**1074530000**
KDSW M25 BN 0 SC 1 G25	M 25 / 1.5	16.80-23.90	13.00-20.00	1.25-1.6	58 / 16	38	47.5	L38	20	**1074540000**
KDSW M25 BN 0 SC 2 G25	M 25 / 1.5	20.30-27.40	13.00-20.00	1.25-1.6	58 / 16	38	47.5	L38	20	**1074550000**
KDSW M32 BN 0 SC 1 G32	M 32 / 1.5	23.20-30.50	19.00-26.30	1.6-2	65 / 16	46	55	L46	10	**1074570000**
KDSW M32 BN 0 SC 2 G32	M 32 / 1.5	26.70-34.00	19.00-26.30	1.6-2	65 / 16	46	55	L46	10	**1074580000**
KDSW M40 BN 0 SC 1 G40	M 40 / 1.5	28.60-36.20	25.00-32.20	1.6-2	72 / 16	55	65	L55	10	**1074590000**
KDSW M40 BN 0 SC 2 G40	M 40 / 1.5	33.00-40.60	25.00-32.20	1.6-2	72 / 16	55	65	L55	10	**1074610000**
KDSW M50 BN 0 SC 1 G50S	M 50 / 1.5	34.80-42.40	31.50-38.20	2-2.5	73 / 16	65	80	L65	1	**1074620000**
KDSW M50 BN 0 SC 2 G50S	M 50 / 1.5	39.40-46.70	31.50-38.20	2-2.5	73 / 16	65	80	L65	1	**1074630000**
KDSW M50 BN 0 SC 1 G50	M 50 / 1.5	41.10-48.50	36.50-44.10	2-2.5	73 / 16	65	80	L65	1	**1074640000**
KDSW M50 BN 0 SC 2 G50	M 50 / 1.5	45.70-53.20	36.50-44.10	2-2.5	73 / 16	65	80	L65	1	**1074650000**
KDSW M63 BN 0 SC 1 G63S	M 63 / 1.5	47.50-54.80	42.50-50.10	2.5	76 / 19	80	95	L80	1	**1074670000**
KDSW M63 BN 0 SC 2 G63S	M 63 / 1.5	52.10-59.50	42.50-50.10	2.5	76 / 19	80	95	L80	1	**1074710000**
KDSW M63 BN 0 SC 1 G63	M 63 / 1.5	53.80-61.20	49.50-56.00	2.5	76 / 19	80	95	L80	1	**1074730000**
KDSW M63 BN 0 SC 2 G63	M 63 / 1.5	58.40-65.80	49.50-56.00	2.5	76 / 19	80	95	L80	1	**1074750000**
KDSW M75 BN 0 SC 1 G75S	M 75 / 1.5	60.20-68.00	54.50-62.00	2.5	82 / 19	90	110	L90	1	**1074770000**
KDSW M75 BN 0 SC 2 G75S	M 75 / 1.5	64.80-72.20	54.50-62.00	2.5	82 / 19	90	110	L90	1	**1074790000**
KDSW M75 BN 0 SC 1 G75	M 75 / 1.5	66.50-73.40	60.50-68.00	2.5	82 / 19	90	110	L90	1	**1074820000**
KDSW M75 BN 0 SC 2 G75	M 75 / 1.5	71.10-78.00	60.50-68.00	2.5	82 / 19	90	110	L90	1	**1074840000**

Note
- All cable glands have a thread pitch of 1.5 mm.
- In the case of Ex d applications, the inner threads used for cable glands must meet the requirements of section 5.3 of EN/IEC 60079-1. In the screwed in position, at least 5 threads must be engaged.
- If the cable glands are installed in non-metallic Ex e connection equipment, these must be connected to the protective earth of the system.
- The connection cable must be laid securely and inflexibly to rule out tensile stress.

Klippon® cable glands - Brass - Ex e, Ex d, IP 66 / IP 68 for armoured cables

Cable gland for cables and lines with single-wire armouring.

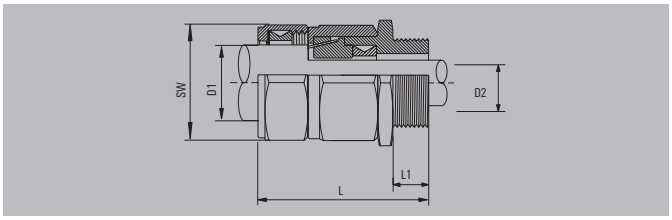

Technical data

Material	Brass, nickel-plated
Seal insert	CR
Temperature range	-20 °C...85 °C
Protection degree	IP 54
Protection degree with GWDR	IP 66, IP 68 - 2.5 bar
Water depth	25 m (30 Min.)
Type of armouring	Single-wire armouring
Approval	ATEX II 2 GD, Ex d IIC / Ex e II / Ex tD A21 IP68, IECEx Ex d IIC / Ex e II

Note IP protection without GWDR is IP 54. To achieve IP 66/68 protection, a nylon GWDR must be ordered separately.

Ordering data

Typ	Thread	D1 outer cable Ø	D2 inner cable Ø	Cable armour	L/L1	SW	MODR	SUHB	Qty.	Order No.
metric, nickel-plated brass										
KDSW M20 BN 0 NI 1 G16	M 20 / 1.5	4.90-10.00	4.00-8.40	0.9	58 / 16	24	32.5	L24	20	**1075030000**
KDSW M20 BN 0 NI 2 G16	M 20 / 1.5	8.40-13.50	4.00-8.40	0.9	58 / 16	24	32.5	L24	20	**1075040000**
KDSW M20 BN 0 NI 1 G20	M 20 / 1.5	12.00-17.60	6.70-14.00	0.9-1.25	58 / 16	30	32.5	L30	20	**1075070000**
KDSW M20 BN 0 NI 2 G20	M 20 / 1.5	15.50-21.10	6.70-14.00	0.9-1.25	58 / 16	24	32.5	L30	20	**1075080000**
KDSW M20 BN 0 NI 1 G20S	M 20 / 1.5	9.40-12.50	8.00-11.70	0.9-1.25	58 / 16	30	32.5	L24	20	**1075050000**
KDSW M20 BN 0 NI 2 G20S	M 20 / 1.5	11.50-16.00	8.00-11.70	0.9-1.25	58 / 16	24	32.5	L24	20	**1075060000**
KDSW M25 BN 0 NI 1 G25	M 25 / 1.5	16.80-23.90	13.00-20.00	1.25-1.6	58 / 16	38	47.5	L38	20	**1075090000**
KDSW M25 BN 0 NI 2 G25	M 25 / 1.5	20.30-27.40	13.00-20.00	1.25-1.6	58 / 16	38	47.5	L38	20	**1075110000**
KDSW M32 BN 0 NI 1 G32	M 32 / 1.5	23.20-30.50	19.00-26.30	1.6-2	65 / 16	46	55	L46	10	**1075120000**
KDSW M32 BN 0 NI 2 G32	M 32 / 1.5	26.70-34.00	19.00-26.30	1.6-2	65 / 16	46	55	L46	10	**1075130000**
KDSW M40 BN 0 NI 1 G40	M 40 / 1.5	28.60-36.20	25.00-32.20	1.6-2	72 / 16	55	65	L55	10	**1075140000**
KDSW M40 BN 0 NI 2 G40	M 40 / 1.5	33.00-40.60	25.00-32.20	1.6-2	72 / 16	55	65	L55	10	**1075150000**
KDSW M50 BN 0 NI 1 G50	M 50 / 1.5	41.10-48.50	36.50-44.10	2-2.5	73 / 16	65	80	L65	1	**1075180000**
KDSW M50 BN 0 NI 2 G50	M 50 / 1.5	45.70-53.20	36.50-44.10	2-2.5	73 / 16	65	80	L65	1	**1075190000**
KDSW M50 BN 0 NI 1 G50S	M 50 / 1.5	34.80-42.40	31.50-38.20	2-2.5	73 / 16	65	80	L65	1	**1075160000**
KDSW M50 BN 0 NI 2 G50S	M 50 / 1.5	39.40-46.70	31.50-38.20	2-2.5	73 / 16	65	80	L65	1	**1075170000**
KDSW M63 BN 0 NI 1 G63	M 63 / 1.5	53.80-61.20	49.50-56.00	2.5	76 / 19	80	95	L80	1	**1075230000**
KDSW M63 BN 0 NI 2 G63	M 63 / 1.5	58.40-65.80	49.50-56.00	2.5	76 / 19	80	95	L80	1	**1075240000**
KDSW M63 BN 0 NI 1 G63S	M 63 / 1.5	47.50-54.80	42.50-50.10	2.5	76 / 19	80	95	L80	1	**1075210000**
KDSW M63 BN 0 NI 2 G63S	M 63 / 1.5	52.10-59.50	42.50-50.10	2.5	76 / 19	80	95	L80	1	**1075220000**
KDSW M75 BN 0 NI 1 G75	M 75 / 1.5	66.50-73.40	60.50-68.00	2.5	82 / 19	90	110	L90	1	**1075270000**
KDSW M75 BN 0 NI 2 G75	M 75 / 1.5	71.10-78.00	60.50-68.00	2.5	82 / 19	90	110	L90	1	**1075280000**
KDSW M75 BN 0 NI 1 G75S	M 75 / 1.5	60.20-68.00	54.50-62.00	2.5	82 / 19	90	110	L90	1	**1075250000**
KDSW M75 BN 0 NI 2 G75S	M 75 / 1.5	64.80-72.20	54.50-62.00	2.5	82 / 19	90	110	L90	1	**1075260000**

Note
- All cable glands have a thread pitch of 1.5 mm.
- In the case of Ex d applications, the inner threads used for cable glands must meet the requirements of section 5.3 of EN/IEC 60079-1. In the screwed in position, at least 5 threads must be engaged.
- If the cable glands are installed in non-metallic Ex e connection equipment, these must be connected to the protective earth of the system.
- The connection cable must be laid securely and inflexibly to rule out tensile stress.

Klippon® cable glands - Brass - Ex e, Ex d, IP 66 / IP 68 for armoured cables

Cable gland for cables and lines with single-wire armouring.

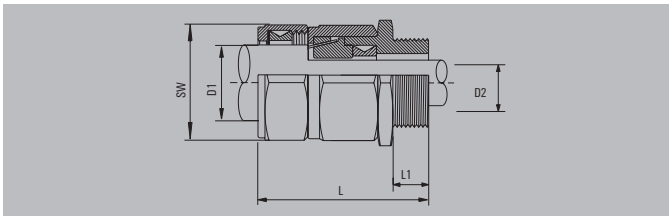

Technical data

Material	Brass
Seal insert	Silicone
Temperature range	-60 °C...180 °C
Protection degree	IP 54
Protection degree with GWDR	IP 66, IP 68 - 2.5 bar
Water depth	25 m (30 Min.)
Type of armouring	Single-wire armouring
Approval	ATEX II 2 GD, Ex d IIC / Ex e II / Ex tD A21 IP68, IECEx Ex d IIC / Ex e II

Note IP protection without GWDR is IP 54. To achieve IP 66/68 protection, a nylon GWDR must be ordered separately.

Ordering data

Typ	Thread	D1 outer cable Ø	D2 inner cable Ø	Cable armour	L/L1	SW	MODR	SUHB	Qty.	Order No.
metric, brass										
KDSW M20 BS 0 SC 1 G16	M 20 / 1.5	4.90-10.00	4.00-8.40	0.9	58 / 16	24	32.5	L24	20	**1136160000**
KDSW M20 BS 0 SC 2 G16	M 20 / 1.5	8.40-13.50	4.00-8.40	0.9	58 / 16	24	32.5	L24	20	**1136170000**
KDSW M20 BS 0 SC 1 G20S	M 20 / 1.5	9.40-12.50	8.00-11.70	0.9-1.25	58 / 16	24	32.5	L24	20	**1136180000**
KDSW M20 BS 0 SC 2 G20S	M 20 / 1.5	11.50-16.00	8.00-11.70	0.9-1.25	58 / 16	24	32.5	L24	20	**1136190000**
KDSW M20 BS 0 SC 1 G20	M 20 / 1.5	12.00-17.60	6.70-14.00	0.9-1.25	58 / 16	30	32.5	L30	20	**1136200000**
KDSW M20 BS 0 SC 2 G20	M 20 / 1.5	15.50-21.10	6.70-14.00	0.9-1.25	58 / 16	30	32.5	L30	20	**1136210000**
KDSW M25 BS 0 SC 1 G25	M 25 / 1.5	16.80-23.90	13.00-20.00	1.25-1.6	58 / 16	38	47.5	L38	20	**1136220000**
KDSW M25 BS 0 SC 2 G25	M 25 / 1.5	20.30-27.40	13.00-20.00	1.25-1.6	58 / 16	38	47.5	L38	20	**1136230000**
KDSW M32 BS 0 SC 1 G32	M 32 / 1.5	23.20-30.50	19.00-26.30	1.6-2	65 / 16	46	55	L46	10	**1136240000**
KDSW M32 BS 0 SC 2 G32	M 32 / 1.5	26.70-34.00	19.00-26.30	1.6-2	65 / 16	46	55	L46	10	**1136250000**
KDSW M40 BS 0 SC 1 G40	M 40 / 1.5	28.60-36.20	25.00-32.20	1.6-2	72 / 16	55	65	L55	10	**1136260000**
KDSW M40 BS 0 SC 2 G40	M 40 / 1.5	33.00-40.60	25.00-32.20	1.6-2	72 / 16	55	65	L55	10	**1136270000**
KDSW M50 BS 0 SC 1 G50S	M 50 / 1.5	34.80-42.40	31.50-38.20	2-2.5	73 / 16	65	80	L65	1	**1136280000**
KDSW M50 BS 0 SC 2 G50S	M 50 / 1.5	39.40-46.70	31.50-38.20	2-2.5	73 / 16	65	80	L65	1	**1136290000**
KDSW M50 BS 0 SC 1 G50	M 50 / 1.5	41.10-48.50	36.50-44.10	2-2.5	73 / 16	65	80	L65	1	**1136310000**
KDSW M50 BS 0 SC 2 G50	M 50 / 1.5	45.70-53.20	36.50-44.10	2-2.5	73 / 16	65	80	L65	1	**1136320000**
KDSW M63 BS 0 SC 1 G63S	M 63 / 1.5	47.50-54.80	42.50-50.10	2.5	76 / 19	80	95	L80	1	**1136330000**
KDSW M63 BS 0 SC 2 G63S	M 63 / 1.5	52.10-59.50	42.50-50.10	2.5	76 / 19	80	95	L80	1	**1136340000**
KDSW M63 BS 0 SC 1 G63	M 63 / 1.5	53.80-61.20	49.50-56.00	2.5	76 / 19	80	95	L80	1	**1136350000**
KDSW M63 BS 0 SC 2 G63	M 63 / 1.5	58.40-65.80	49.50-56.00	2.5	76 / 19	80	95	L80	1	**1136360000**
KDSW M75 BS 0 SC 1 G75S	M 75 / 1.5	60.20-68.00	54.50-62.00	2.5	82 / 19	90	110	L90	1	**1136370000**
KDSW M75 BS 0 SC 2 G75S	M 75 / 1.5	64.80-72.20	54.50-62.00	2.5	82 / 19	90	110	L90	1	**1136380000**
KDSW M75 BS 0 SC 1 G75	M 75 / 1.5	66.50-73.40	60.50-68.00	2.5	82 / 19	90	110	L90	1	**1136390000**
KDSW M75 BS 0 SC 2 G75	M 75 / 1.5	71.10-78.00	60.50-68.00	2.5	82 / 19	90	110	L90	1	**1136400000**

Note
- All cable glands have a thread pitch of 1.5 mm.
- In the case of Ex d applications, the inner threads used for cable glands must meet the requirements of section 5.3 of EN/IEC 60079-1. In the screwed in position, at least 5 threads must be engaged.
- If the cable glands are installed in non-metallic Ex e connection equipment, these must be connected to the protective earth of the system.
- The connection cable must be laid securely and inflexibly to rule out tensile stress.

Klippon® cable glands - Brass - Ex e, Ex d, IP 66 / IP 68 for armoured cables

Cable gland for cables and lines with single-wire armouring.

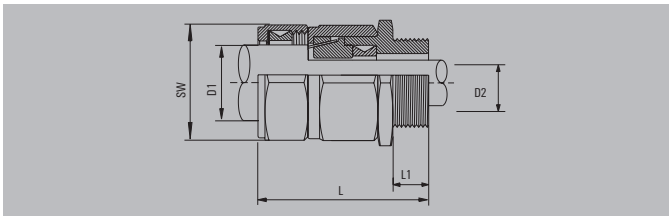

Technical data

Material	Brass, nickel-plated
Seal insert	Silicone
Temperature range	-60 °C...180 °C
Protection degree	IP 54
Protection degree with GWDR	IP 66, IP 68 - 2.5 bar
Water depth	25 m (30 Min.)
Type of armouring	Single-wire armouring
Approval	ATEX II 2 GD, Ex d IIC / Ex e II / Ex tD A21 IP68, IECEx Ex d IIC / Ex e II

Note IP protection without GWDR is IP 54. To achieve IP 66/68 protection, a nylon GWDR must be ordered separately.

Ordering data

Typ	Thread	D1 outer cable Ø	D2 inner cable Ø	Cable armour	L/L1	SW	MODR	SUHB	Qty.	Order No.
metric, nickel-plated brass										
KDSW M20 BS 0 NI 1 G16	M 20 / 1.5	4.90-10.00	4.00-8.40	0.9	58 / 16	24	32.5	L24	20	**1136410000**
KDSW M20 BS 0 NI 2 G16	M 20 / 1.5	8.40-13.50	4.00-8.40	0.9	58 / 16	24	32.5	L24	20	**1136420000**
KDSW M20 BS 0 NI 1 G20	M 20 / 1.5	12.00-17.60	6.70-14.00	0.9-1.25	58 / 16	30	32.5	L30	20	**1136450000**
KDSW M20 BS 0 NI 2 G20	M 20 / 1.5	15.50-21.10	6.70-14.00	0.9-1.25	58 / 16	24	32.5	L30	20	**1136460000**
KDSW M20 BS 0 NI 1 G20S	M 20 / 1.5	9.40-12.50	8.00-11.70	0.9-1.25	58 / 16	30	32.5	L24	20	**1136430000**
KDSW M20 BS 0 NI 2 G20S	M 20 / 1.5	11.50-16.00	8.00-11.70	0.9-1.25	58 / 16	24	32.5	L24	20	**1136440000**
KDSW M25 BS 0 NI 1 G25	M 25 / 1.5	16.80-23.90	13.00-20.00	1.25-1.6	58 / 16	38	47.5	L38	20	**1136470000**
KDSW M25 BS 0 NI 2 G25	M 25 / 1.5	20.30-27.40	13.00-20.00	1.25-1.6	58 / 16	38	47.5	L38	20	**1136480000**
KDSW M32 BS 0 NI 1 G32	M 32 / 1.5	23.20-30.50	19.00-26.30	1.6-2	65 / 16	46	55	L46	10	**1136490000**
KDSW M32 BS 0 NI 2 G32	M 32 / 1.5	26.70-34.00	19.00-26.30	1.6-2	65 / 16	46	55	L46	10	**1136510000**
KDSW M40 BS 0 NI 1 G40	M 40 / 1.5	28.60-36.20	25.00-32.20	1.6-2	72 / 16	55	65	L55	10	**1136520000**
KDSW M40 BS 0 NI 2 G40	M 40 / 1.5	33.00-40.60	25.00-32.20	1.6-2	72 / 16	55	65	L55	10	**1136530000**
KDSW M50 BS 0 NI 1 G50	M 50 / 1.5	41.10-48.50	36.50-44.10	2-2.5	73 / 16	65	80	L65	1	**1136560000**
KDSW M50 BS 0 NI 2 G50	M 50 / 1.5	45.70-53.20	36.50-44.10	2-2.5	73 / 16	65	80	L65	1	**1136570000**
KDSW M50 BS 0 NI 1 G50S	M 50 / 1.5	34.80-42.40	31.50-38.20	2-2.5	73 / 16	65	80	L65	1	**1136540000**
KDSW M50 BS 0 NI 2 G50S	M 50 / 1.5	39.40-46.70	31.50-38.20	2-2.5	73 / 16	65	80	L65	1	**1136550000**
KDSW M63 BS 0 NI 1 G63	M 63 / 1.5	53.80-61.20	49.50-56.00	2.5	76 / 19	80	95	L80	1	**1136600000**
KDSW M63 BS 0 NI 2 G63	M 63 / 1.5	58.40-65.80	49.50-56.00	2.5	76 / 19	80	95	L80	1	**1136610000**
KDSW M63 BS 0 NI 1 G63S	M 63 / 1.5	47.50-54.80	42.50-50.10	2.5	76 / 19	80	95	L80	1	**1136580000**
KDSW M63 BS 0 NI 2 G63S	M 63 / 1.5	52.10-59.50	42.50-50.10	2.5	76 / 19	80	95	L80	1	**1136590000**
KDSW M75 BS 0 NI 1 G75	M 75 / 1.5	66.50-73.40	60.50-68.00	2.5	82 / 19	90	110	L90	1	**1136640000**
KDSW M75 BS 0 NI 2 G75	M 75 / 1.5	71.10-78.00	60.50-68.00	2.5	82 / 19	90	110	L90	1	**1136650000**
KDSW M75 BS 0 NI 1 G75S	M 75 / 1.5	60.20-68.00	54.50-62.00	2.5	82 / 19	90	110	L90	1	**1136620000**
KDSW M75 BS 0 NI 2 G75S	M 75 / 1.5	64.80-72.20	54.50-62.00	2.5	82 / 19	90	110	L90	1	**1136630000**

Note
- All cable glands have a thread pitch of 1.5 mm.
- In the case of Ex d applications, the inner threads used for cable glands must meet the requirements of section 5.3 of EN/IEC 60079-1. In the screwed in position, at least 5 threads must be engaged.
- If the cable glands are installed in non-metallic Ex e connection equipment, these must be connected to the protective earth of the system.
- The connection cable must be laid securely and inflexibly to rule out tensile stress.

Klippon® cable glands - Brass - Ex e, Ex d, IP 66 / IP 68 for armoured cables

Cable gland for cables and lines with single-wire armouring and lead-sheath armouring.

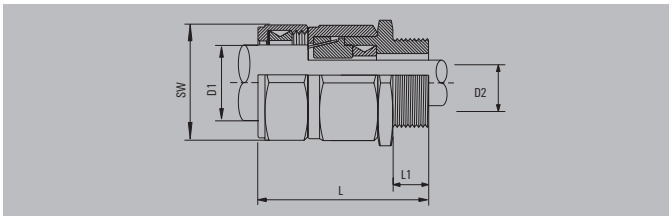

Technical data

Material	Brass
Seal insert	CR
Temperature range	-20 °C...85 °C
Protection degree	IP 54
Protection degree with GWDR	IP 66, IP 68 - 2.5 bar
Water depth	25 m (30 Min.)
Type of armouring	Single-wire armouring, Lead sheath armouring
Approval	ATEX II 2 GD, Ex d IIC / Ex e II / Ex tD A21 IP68, IECEx Ex d IIC / Ex e II

Note IP protection without GWDR is IP 54. To achieve IP 66/68 protection, a nylon GWDR must be ordered separately.

Ordering data

Typ	Thread	D1 outer cable Ø	D2 inner cable Ø	Cable armour	L/L1	SW	MODR	SUHB	Qty.	Order No.
metric, brass										
KDSW M20 BN L SC 1 G16	M 20 / 1.5	4.90-10.00	4.00-8.40	0.9	58 / 16	24	32.5	L24	20	**1076250000**
KDSW M20 BN L SC 2 G16	M 20 / 1.5	8.40-13.50	4.00-8.40	0.9	58 / 16	24	32.5	L24	20	**1076270000**
KDSW M20 BN L SC 1 G20S	M 20 / 1.5	9.40-12.50	8.00-11.70	0.9-1.25	58 / 16	24	32.5	L24	20	**1076280000**
KDSW M20 BN L SC 2 G20S	M 20 / 1.5	11.50-16.00	8.00-11.70	0.9-1.25	58 / 16	24	32.5	L24	20	**1076290000**
KDSW M20 BN L SC 1 G20	M 20 / 1.5	12.00-17.60	6.70-14.00	0.9-1.25	58 / 16	30	32.5	L30	20	**1076300000**
KDSW M20 BN L SC 2 G20	M 20 / 1.5	15.50-21.10	6.70-14.00	0.9-1.25	58 / 16	30	32.5	L30	20	**1076310000**
KDSW M25 BN L SC 1 G25	M 25 / 1.5	16.80-23.90	13.00-20.00	1.25-1.6	58 / 16	38	47.5	L38	20	**1076320000**
KDSW M25 BN L SC 2 G25	M 25 / 1.5	20.30-27.40	13.00-20.00	1.25-1.6	58 / 16	38	47.5	L38	20	**1076330000**
KDSW M32 BN L SC 1 G32	M 32 / 1.5	23.20-30.50	19.00-26.30	1.6-2	65 / 16	46	55	L46	10	**1076340000**
KDSW M32 BN L SC 2 G32	M 32 / 1.5	26.70-34.00	19.00-26.30	1.6-2	65 / 16	46	55	L46	10	**1076350000**
KDSW M40 BN L SC 1 G40	M 40 / 1.5	28.60-36.20	25.00-32.20	1.6-2	72 / 16	55	65	L55	10	**1076360000**
KDSW M40 BN L SC 2 G40	M 40 / 1.5	33.00-40.60	25.00-32.20	1.6-2	72 / 16	55	65	L55	10	**1076370000**
KDSW M50 BN L SC 1 G50S	M 50 / 1.5	34.80-42.40	31.50-38.20	2-2.5	73 / 16	65	80	L65	1	**1076380000**
KDSW M50 BN L SC 2 G50S	M 50 / 1.5	39.40-46.70	31.50-38.20	2-2.5	73 / 16	65	80	L65	1	**1076390000**
KDSW M50 BN L SC 1 G50	M 50 / 1.5	41.10-48.50	36.50-44.10	2-2.5	73 / 16	65	80	L65	1	**1076400000**
KDSW M50 BN L SC 2 G50	M 50 / 1.5	45.70-53.20	36.50-44.10	2-2.5	73 / 16	65	80	L65	1	**1076410000**
KDSW M63 BN L SC 1 G63S	M 63 / 1.5	47.50-54.80	42.50-50.10	2.5	76 / 19	80	95	L80	1	**1076420000**
KDSW M63 BN L SC 2 G63S	M 63 / 1.5	52.10-59.50	42.50-50.10	2.5	76 / 19	80	95	L80	1	**1076430000**
KDSW M63 BN L SC 1 G63	M 63 / 1.5	53.80-61.20	49.50-56.00	2.5	76 / 19	80	95	L80	1	**1076440000**
KDSW M63 BN L SC 2 G63	M 63 / 1.5	58.40-65.80	49.50-56.00	2.5	76 / 19	80	95	L80	1	**1076450000**
KDSW M75 BN L SC 1 G75S	M 75 / 1.5	60.20-68.00	54.50-62.00	2.5	82 / 19	90	110	L90	1	**1076460000**
KDSW M75 BN L SC 2 G75S	M 75 / 1.5	64.80-72.20	54.50-62.00	2.5	82 / 19	90	110	L90	1	**1076470000**
KDSW M75 BN L SC 1 G75	M 75 / 1.5	66.50-73.40	60.50-68.00	2.5	82 / 19	90	110	L90	1	**1076480000**
KDSW M75 BN L SC 2 G75	M 75 / 1.5	71.10-78.00	60.50-68.00	2.5	82 / 19	90	110	L90	1	**1076490000**

Note
- All cable glands have a thread pitch of 1.5 mm.
- In the case of Ex d applications, the inner threads used for cable glands must meet the requirements of section 5.3 of EN/IEC 60079-1. In the screwed in position, at least 5 threads must be engaged.
- If the cable glands are installed in non-metallic Ex e connection equipment, these must be connected to the protective earth of the system.
- The connection cable must be laid securely and inflexibly to rule out tensile stress.

Klippon® cable glands - Brass - Ex e, Ex d, IP 66 / IP 68 for armoured cables

Cable gland for cables and lines with single-wire armouring and lead-sheath armouring.

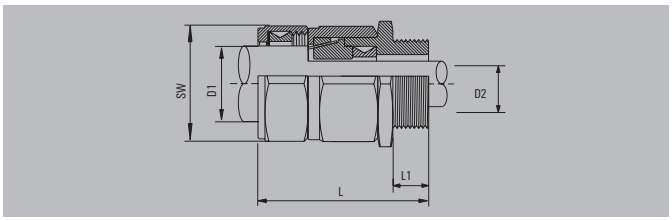

Technical data

Material	Brass, nickel-plated
Seal insert	CR
Temperature range	-20 °C...85 °C
Protection degree	IP 54
Protection degree with GWDR	IP 66, IP 68 - 2.5 bar
Water depth	25 m (30 Min.)
Type of armouring	Single-wire armouring, Lead sheath armouring
Approval	ATEX II 2 GD, Ex d IIC / Ex e II / Ex tD A21 IP68, IECEx Ex d IIC / Ex e II

Note IP protection without GWDR is IP 54. To achieve IP 66/68 protection, a nylon GWDR must be ordered separately.

Ordering data

Typ	Thread	D1 outer cable Ø	D2 inner cable Ø	Cable armour	L/L1	SW	MODR	SUHB	Qty.	Order No.
metric, nickel-plated brass										
KDSW M20 BN L NI 1 G16	M 20 / 1.5	4.90-10.00	4.00-8.40	0.9	58 / 16	24	32.5	L24	20	**1074660000**
KDSW M20 BN L NI 2 G16	M 20 / 1.5	8.40-13.50	4.00-8.40	0.9	58 / 16	24	32.5	L24	20	**1074690000**
KDSW M20 BN L NI 1 G20	M 20 / 1.5	12.00-17.60	6.70-14.00	0.9-1.25	58 / 16	30	32.5	L30	20	**1074760000**
KDSW M20 BN L NI 2 G20	M 20 / 1.5	15.50-21.10	6.70-14.00	0.9-1.25	58 / 16	30	32.5	L30	20	**1074780000**
KDSW M20 BN L NI 1 G20S	M 20 / 1.5	9.40-12.50	8.00-11.70	0.9-1.25	58 / 16	24	32.5	L24	20	**1074720000**
KDSW M20 BN L NI 2 G20S	M 20 / 1.5	11.50-16.00	8.00-11.70	0.9-1.25	58 / 16	24	32.5	L24	20	**1074740000**
KDSW M25 BN L NI 1 G25	M 25 / 1.5	16.80-23.90	13.00-20.00	1.25-1.6	58 / 16	38	47.5	L38	20	**1074810000**
KDSW M25 BN L NI 2 G25	M 25 / 1.5	20.30-27.40	13.00-20.00	1.25-1.6	58 / 16	38	47.5	L38	20	**1074830000**
KDSW M32 BN L NI 1 G32	M 32 / 1.5	23.20-30.50	19.00-26.30	1.6-2	65 / 16	46	55	L46	10	**1074850000**
KDSW M32 BN L NI 2 G32	M 32 / 1.5	26.70-34.00	19.00-26.30	1.6-2	65 / 16	46	55	L46	10	**1074860000**
KDSW M40 BN L NI 1 G40	M 40 / 1.5	28.60-36.20	25.00-32.20	1.6-2	72 / 16	55	65	L55	10	**1074870000**
KDSW M40 BN L NI 2 G40	M 40 / 1.5	33.00-40.60	25.00-32.20	1.6-2	72 / 16	55	65	L55	10	**1074880000**
KDSW M50 BN L NI 1 G50	M 50 / 1.5	41.40-48.50	36.50-44.10	2-2.5	73 / 16	65	80	L65	1	**1074920000**
KDSW M50 BN L NI 2 G50	M 50 / 1.5	45.70-53.20	36.50-44.10	2-2.5	73 / 16	65	80	L65	1	**1074930000**
KDSW M50 BN L NI 1 G50S	M 50 / 1.5	34.80-42.40	31.50-38.20	2-2.5	73 / 16	65	80	L65	1	**1074890000**
KDSW M50 BN L NI 2 G50S	M 50 / 1.5	39.40-46.70	31.50-38.20	2-2.5	73 / 16	65	80	L65	1	**1074910000**
KDSW M63 BN L NI 1 G63	M 63 / 1.5	53.80-61.20	49.50-56.00	2.5	76 / 19	80	95	L80	1	**1074960000**
KDSW M63 BN L NI 2 G63	M 63 / 1.5	58.40-65.80	49.50-56.00	2.5	76 / 19	80	95	L80	1	**1074970000**
KDSW M63 BN L NI 1 G63S	M 63 / 1.5	47.50-54.80	42.50-50.10	2.5	76 / 19	80	95	L80	1	**1074940000**
KDSW M63 BN L NI 2 G63S	M 63 / 1.5	52.10-59.50	42.50-50.10	2.5	76 / 19	80	95	L80	1	**1074950000**
KDSW M75 BN L NI 1 G75	M 75 / 1.5	66.50-73.40	60.50-68.00	2.5	82 / 19	90	110	L90	1	**1075010000**
KDSW M75 BN L NI 2 G75	M 75 / 1.5	71.10-78.00	60.50-68.00	2.5	82 / 19	90	110	L90	1	**1075020000**
KDSW M75 BN L NI 1 G75S	M 75 / 1.5	60.20-68.00	54.50-62.00	2.5	82 / 19	90	110	L90	1	**1074980000**
KDSW M75 BN L NI 2 G75S	M 75 / 1.5	64.80-72.20	54.50-62.00	2.5	82 / 19	90	110	L90	1	**1074990000**

Note
- All cable glands have a thread pitch of 1.5 mm.
- In the case of Ex d applications, the inner threads used for cable glands must meet the requirements of section 5.3 of EN/IEC 60079-1. In the screwed in position, at least 5 threads must be engaged.
- If the cable glands are installed in non-metallic Ex e connection equipment, these must be connected to the protective earth of the system.
- The connection cable must be laid securely and inflexibly to rule out tensile stress.

Klippon® cable glands - Brass - Ex e, Ex d, IP 66 / IP 68 for armoured cables

Cable gland for cables and lines with braided armouring.

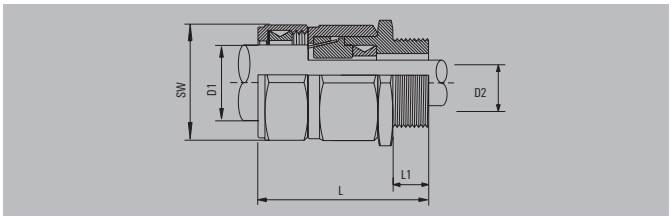

Technical data

Material	Brass
Seal insert	Silicone
Temperature range	-60 °C...180 °C
Protection degree	IP 54
Protection degree with GWDR	IP 66, IP 68 - 2.5 bar
Water depth	25 m (30 Min.)
Type of armouring	Braided armouring
Approval	ATEX II 2 GD, Ex d IIC / Ex e II / Ex tD A21 IP68, IECEx Ex d IIC / Ex e II

Note IP protection without GWDR is IP 54. To achieve IP 66/68 protection, a nylon GWDR must be ordered separately.

Ordering data

Typ	Thread	D1 outer cable Ø	D2 inner cable Ø	Cable armour	L/L1	SW	MODR	SUHB	Qty.	Order No.
metric, brass										
KDSX M20 BS 0 SC 1 G16	M 20 / 1.5	4.90-10.00	4.00-8.40	0.15-0.35	58 / 16	24	32.5	L24	20	**1135650000**
KDSX M20 BS 0 SC 2 G16	M 20 / 1.5	8.40-13.50	4.00-8.40	0.15-0.35	58 / 16	24	32.5	L24	20	**1135660000**
KDSX M20 BS 0 SC 1 G20S	M 20 / 1.5	9.40-12.50	8.00-11.70	0.15-0.35	58 / 16	24	32.5	L24	20	**1135670000**
KDSX M20 BS 0 SC 2 G20S	M 20 / 1.5	11.50-16.00	8.00-11.70	0.15-0.35	58 / 16	24	32.5	L24	20	**1135680000**
KDSX M20 BS 0 SC 1 G20	M 20 / 1.5	12.00-17.60	6.70-14.00	0.15-0.5	58 / 16	30	32.5	L30	20	**1135690000**
KDSX M20 BS 0 SC 2 G20	M 20 / 1.5	15.50-21.10	6.70-14.00	0.15-0.5	58 / 16	30	32.5	L30	20	**1135710000**
KDSX M25 BS 0 SC 1 G25	M 25 / 1.5	16.80-23.90	13.00-20.00	0.15-0.5	58 / 16	38	47.5	L38	20	**1135720000**
KDSX M25 BS 0 SC 2 G25	M 25 / 1.5	20.30-27.40	13.00-20.00	0.15-0.5	58 / 16	38	47.5	L38	20	**1135730000**
KDSX M32 BS 0 SC 1 G32	M 32 / 1.5	23.20-30.50	19.00-26.30	0.15-0.55	65 / 16	46	55	L46	10	**1135740000**
KDSX M32 BS 0 SC 2 G32	M 32 / 1.5	26.70-34.00	19.00-26.30	0.15-0.55	65 / 16	46	55	L46	10	**1135750000**
KDSX M40 BS 0 SC 1 G40	M 40 / 1.5	28.60-36.20	25.00-32.20	0.2-0.6	72 / 16	55	65	L55	10	**1135760000**
KDSX M40 BS 0 SC 2 G40	M 40 / 1.5	33.00-40.60	25.00-32.20	0.2-0.6	72 / 16	55	65	L55	10	**1135770000**
KDSX M50 BS 0 SC 1 G50S	M 50 / 1.5	34.80-42.40	31.50-38.20	0.2-0.6	73 / 16	65	80	L65	1	**1135780000**
KDSX M50 BS 0 SC 2 G50S	M 50 / 1.5	39.40-46.70	31.50-38.20	0.2-0.6	73 / 16	65	80	L65	1	**1135790000**
KDSX M50 BS 0 SC 1 G50	M 50 / 1.5	41.10-48.50	36.50-44.10	0.3-0.8	73 / 16	65	80	L65	1	**1135800000**
KDSX M50 BS 0 SC 2 G50	M 50 / 1.5	45.70-53.20	36.50-44.10	0.3-0.8	73 / 16	65	80	L65	1	**1135810000**
KDSX M63 BS 0 SC 1 G63S	M 63 / 1.5	47.50-54.80	42.50-50.10	0.3-0.8	76 / 19	80	95	L80	1	**1135820000**
KDSX M63 BS 0 SC 2 G63S	M 63 / 1.5	52.10-59.50	42.50-50.10	0.3-0.8	76 / 19	80	95	L80	1	**1135830000**
KDSX M63 BS 0 SC 1 G63	M 63 / 1.5	53.80-61.20	49.50-56.00	0.3-0.8	76 / 19	80	95	L80	1	**1135840000**
KDSX M63 BS 0 SC 2 G63	M 63 / 1.5	58.40-65.80	49.50-56.00	0.3-0.8	76 / 19	80	95	L80	1	**1135850000**
KDSX M75 BS 0 SC 1 G75S	M 75 / 1.5	60.20-68.00	54.50-62.00	0.3-1	82 / 19	90	110	L90	1	**1135860000**
KDSX M75 BS 0 SC 2 G75S	M 75 / 1.5	64.80-72.20	54.50-62.00	0.3-1	82 / 19	90	110	L90	1	**1135870000**
KDSX M75 BS 0 SC 1 G75	M 75 / 1.5	66.50-73.40	60.50-68.00	0.3-1	82 / 19	90	110	L90	1	**1135880000**
KDSX M75 BS 0 SC 2 G75	M 75 / 1.5	71.10-78.00	60.50-68.00	0.3-1	82 / 19	90	110	L90	1	**1135890000**

Note
- All cable glands have a thread pitch of 1.5 mm.
- In the case of Ex d applications, the inner threads used for cable glands must meet the requirements of section 5.3 of EN/IEC 60079-1. In the screwed in position, at least 5 threads must be engaged.
- If the cable glands are installed in non-metallic Ex e connection equipment, these must be connected to the protective earth of the system.
- The connection cable must be laid securely and inflexibly to rule out tensile stress.

Klippon® cable glands - Brass - Ex e, Ex d, IP 66 / IP 68 for armoured cables

Cable gland for cables and lines with braided armouring.

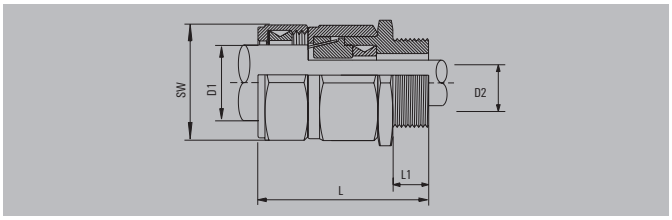

Technical data

Material	Brass, nickel-plated
Seal insert	Silicone
Temperature range	-60 °C...180 °C
Protection degree	IP 54
Protection degree with GWDR	IP 66, IP 68 - 2.5 bar
Water depth	25 m (30 Min.)
Type of armouring	Braided armouring
Approval	ATEX II 2 GD, Ex d IIC / Ex e II / Ex tD A21 IP68, IECEx Ex d IIC / Ex e II

Note IP protection without GWDR is IP 54. To achieve IP 66/68 protection, a nylon GWDR must be ordered separately.

Ordering data

Typ	Thread	D1 outer cable Ø	D2 inner cable Ø	Cable armour	L/L1	SW	MODR	SUHB	Qty.	Order No.
metric, nickel-plated brass										
KDSX M20 BS O NI 1 G16	M 20 / 1.5	4.90-10.00	4.00-8.40	0.15-0.35	58 / 16	24	32.5	L24	20	**1135910000**
KDSX M20 BS O NI 2 G16	M 20 / 1.5	8.40-13.50	4.00-8.40	0.15-0.35	58 / 16	24	32.5	L24	20	**1135920000**
KDSX M20 BS O NI 1 G20	M 20 / 1.5	12.00-17.60	6.70-14.00	0.15-0.5	58 / 16	30	32.5	L30	20	**1135950000**
KDSX M20 BS O NI 2 G20	M 20 / 1.5	15.50-21.10	6.70-14.00	0.15-0.5	58 / 16	30	32.5	L30	20	**1135960000**
KDSX M20 BS O NI 1 G20S	M 20 / 1.5	9.40-12.50	8.00-11.70	0.15-0.35	58 / 16	24	32.5	L24	20	**1135930000**
KDSX M20 BS O NI 2 G20S	M 20 / 1.5	11.50-16.00	8.00-11.70	0.15-0.35	58 / 16	24	32.5	L24	20	**1135940000**
KDSX M25 BS O NI 1 G25	M 25 / 1.5	16.80-23.90	13.00-20.00	0.15-0.5	58 / 16	38	47.5	L38	20	**1135970000**
KDSX M25 BS O NI 2 G25	M 25 / 1.5	20.30-27.40	13.00-20.00	0.15-0.5	58 / 16	38	47.5	L38	20	**1135980000**
KDSX M32 BS O NI 1 G32	M 32 / 1.5	23.20-30.50	19.00-26.30	0.15-0.55	65 / 16	46	55	L46	10	**1135990000**
KDSX M32 BS O NI 2 G32	M 32 / 1.5	26.70-34.00	19.00-26.30	0.15-0.55	65 / 16	46	55	L46	10	**1136000000**
KDSX M40 BS O NI 1 G40	M 40 / 1.5	28.60-36.20	25.00-32.20	0.2-0.6	72 / 16	55	65	L55	10	**1136010000**
KDSX M40 BS O NI 2 G40	M 40 / 1.5	33.00-40.60	25.00-32.20	0.2-0.6	72 / 16	55	65	L55	10	**1136020000**
KDSX M50 BS O NI 1 G50	M 50 / 1.5	41.10-48.50	36.50-44.10	0.2-0.8	73 / 16	65	80	L65	1	**1136050000**
KDSX M50 BS O NI 2 G50	M 50 / 1.5	45.70-53.20	36.50-44.10	0.2-0.8	73 / 16	65	80	L65	1	**1136060000**
KDSX M50 BS O NI 1 G50S	M 50 / 1.5	34.80-42.40	31.50-38.20	0.2-0.6	73 / 16	65	80	L65	1	**1136030000**
KDSX M50 BS O NI 2 G50S	M 50 / 1.5	39.40-46.70	31.50-38.20	0.2-0.6	73 / 16	65	80	L65	1	**1136040000**
KDSX M63 BS O NI 1 G63	M 63 / 1.5	53.80-61.20	49.50-65.00	0.3-0.8	76 / 19	80	95	L80	1	**1136090000**
KDSX M63 BS O NI 2 G63	M 63 / 1.5	58.40-65.80	49.50-65.00	0.3-0.8	76 / 19	80	95	L80	1	**1136110000**
KDSX M63 BS O NI 1 G63S	M 63 / 1.5	47.50-54.80	42.50-50.10	0.3-0.8	76 / 19	80	95	L80	1	**1136070000**
KDSX M63 BS O NI 2 G63S	M 63 / 1.5	52.10-59.50	42.50-50.10	0.3-0.8	76 / 19	80	95	L80	1	**1136080000**
KDSX M75 BS O NI 1 G75	M 75 / 1.5	66.50-73.40	60.50-68.00	0.3-1	82 / 19	90	110	L90	1	**1136140000**
KDSX M75 BS O NI 2 G75	M 75 / 1.5	71.10-78.00	60.50-68.00	0.3-1	82 / 19	90	110	L90	1	**1136150000**
KDSX M75 BS O NI 1 G75S	M 75 / 1.5	60.20-68.00	54.50-62.00	0.3-1	82 / 19	90	110	L90	1	**1136120000**
KDSX M75 BS O NI 2 G75S	M 75 / 1.5	64.80-72.20	54.50-62.00	0.3-1	82 / 19	90	110	L90	1	**1136130000**

Note
- All cable glands have a thread pitch of 1.5 mm.
- In the case of Ex d applications, the inner threads used for cable glands must meet the requirements of section 5.3 of EN/IEC 60079-1. In the screwed in position, at least 5 threads must be engaged.
- If the cable glands are installed in non-metallic Ex e connection equipment, these must be connected to the protective earth of the system.
- The connection cable must be laid securely and inflexibly to rule out tensile stress.

Klippon® cable glands - Brass - Ex e, Ex d, IP 66 / IP 68 for non-armoured cables

Cable gland exclusively for non-armoured cables and lines.

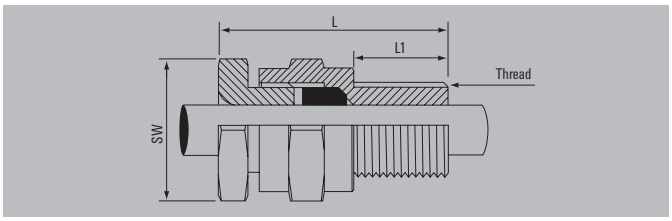

Technical data

Material	Brass, nickel-plated
O-ring / Seal insert	CR / CR
Temperature range	-20 °C...85 °C
Degree of protection	IP 66, IP 68 - 2.5 bar
Water depth	25 m (30 Min.)
Approval	ATEX II 2 GD, Ex d IIC / Ex e II / Ex tD A21 IP68, IECEx Ex d IIC / Ex e II

Note Length „L" varies according to cable diameter used.

Ordering data

Typ	Thread	KB	L/L1	SW	SUHB	Qty.	Order No.
metric, brass							
KSG M20 BN 0 SC 2 G16	M 20 / 1.5	4-8.4	33 / 16	25	L24	20	**1909380000**
KSG M20 BN 0 SC 2 G20S	M 20 / 1.5	7.2-11.7	33 / 16	25	L24	20	**1909400000**
KSG M20 BN 0 SC 2 G20	M 20 / 1.5	9.6-14	33 / 16	30	L30	20	**1909410000**
KSG M25 BN 0 SC 2 G25	M 25 / 1.5	13.5-20	33 / 16	38	L38	20	**1909420000**
KSG M32 BN 0 SC 2 G32	M 32 / 1.5	19.5-26.3	33 / 16	46	L46	10	**1909430000**
KSG M40 BN 0 SC 2 G40	M 40 / 1.5	23-32.2	37 / 16	55	L55	10	**1909440000**
KSG M50 BN 0 SC 2 G50S	M 50 / 1.5	28.2-38.2	37 / 16	65	L65	1	**1909450000**
KSG M50 BN 0 SC 2 G50	M 50 / 1.5	33.2-44.1	37 / 16	65	L65	1	**1909460000**
KSG M63 BN 0 SC 2 G63S	M 63 / 1.5	39.3-50.1	37 / 19	80	L80	1	**1909470000**
KSG M63 BN 0 SC 2 G63	M 63 / 1.5	46.7-56	37 / 19	80	L80	1	**1909480000**
KSG M75 BN 0 SC 2 G75	M 75 / 1.5	58.1-68	37 / 19	90	L90	1	**1075340000**
KSG M75 BN 0 SC 2 G75S	M 75 / 1.5	52.3-62	37 / 19	90	L90	1	**1075330000**
metric, nickel-plated brass							
KSG M20 BN 0 NI 2 G16	M 20 / 1.5	4-8.4	33 / 16	25	L24	20	**1911510000**
KSG M20 BN 0 NI 2 G20S	M 20 / 1.5	7.2-11.7	33 / 16	25	L24	20	**1911540000**
KSG M20 BN 0 NI 2 G20	M 20 / 1.5	9.6-14	33 / 16	30	L30	20	**1911560000**
KSG M25 BN 0 NI 2 G25	M 25 / 1.5	13.5-20	33 / 16	38	L38	20	**1911570000**
KSG M32 BN 0 NI 2 G32	M 32 / 1.5	19.5-26.3	33 / 16	46	L46	10	**1911580000**
KSG M40 BN 0 NI 2 G40	M 40 / 1.5	23-32.2	37 / 16	55	L55	10	**1911590000**
KSG M50 BN 0 NI 2 G50S	M 50 / 1.5	28.2-38.2	37 / 16	65	L65	1	**1911600000**
KSG M50 BN 0 NI 2 G50	M 50 / 1.5	33.2-44.1	37 / 16	65	L65	1	**1911610000**
KSG M63 BN 0 NI 2 G63S	M 63 / 1.5	39.3-50.1	37 / 19	80	L80	1	**1911620000**
KSG M63 BN 0 NI 2 G63	M 63 / 1.5	46.7-56	37 / 19	80	L80	1	**1911630000**
KSG M75 BN 0 NI 2 G75	M 75 / 1.5	58.1-68	37 / 19	90	L90	1	**1075360000**
KSG M75 BN 0 NI 2 G75S	M 75 / 1.5	52.3-62	37 / 19	90	L90	1	**1075350000**

Note
- All cable glands have a thread pitch of 1.5 mm.
- In the case of Ex d applications, the inner threads used for cable glands must meet the requirements of section 5.3 of EN/IEC 60079-1. In the screwed in position, at least 5 threads must be engaged.
- If the cable glands are installed in non-metallic Ex e connection equipment, these must be connected to the protective earth of the system.
- The connection cable must be laid securely and inflexibly to rule out tensile stress.

Klippon® cable glands - Brass - Ex e, Ex d, IP 66 / IP 68 for non-armoured cables

Cable gland exclusively for non-armoured cables and lines.

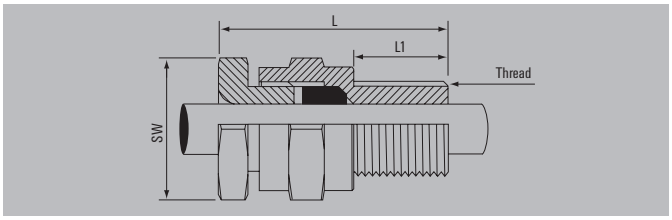

Technical data

Material	Brass
O-ring / Seal insert	Silicone / Silicone
Temperature range	-60 °C...180 °C
Degree of protection	IP 66, IP 68 - 2.5 bar
Water depth	25 m (30 Min.)
Approval	ATEX II 2 GD, Ex d IIC / Ex e II / Ex tD A21 IP68, IECEx Ex d IIC / Ex e II

Note

Ordering data

Typ	Thread	KB	L/L1	SW	SUHB	Qty.	Order No.
metric, brass							
KSG M20 BS O SC 2 G16	M 20 / 1.5	4-8.4	33 / 16	25	L24	20	**0930481212**
KSG M20 BS O SC 2 G20	M 20 / 1.5	9.6-14	33 / 16	30	L30	20	**0930501212**
KSG M20 BS O SC 2 G20S	M 20 / 1.5	7.2-11.7	33 / 16	25	L24	20	**1136720000**
KSG M25 BS O SC 2 G25	M 25 / 1.5	13.5-20	33 / 16	38	L38	20	**0930511212**
KSG M32 BS O SC 2 G32	M 32 / 1.5	19.5-26.3	33 / 16	46	L46	10	**0930521212**
KSG M40 BS O SC 2 G40	M 40 / 1.5	23-32.2	37 / 16	55	L55	10	**0930531212**
KSG M50 BS O SC 2 G50	M 50 / 1.5	33.2-44.1	37 / 16	65	L65	1	**0930551212**
KSG M50 BS O SC 2 G50S	M 50 / 1.5	28.2-38.2	37 / 16	65	L65	1	**1136730000**
KSG M63 BS O SC 2 G63	M 63 / 1.5	46.7-56	37 / 19	80	L80	1	**1136750000**
KSG M63 BS O SC 2 G63S	M 63 / 1.5	39.3-50.1	37 / 19	80	L80	1	**1136740000**
KSG M75 BS O SC 2 G75	M 75 / 1.5	58.1-68	37 / 19	90	L90	1	**1136770000**
KSG M75 BS O SC 2 G75S	M 75 / 1.5	52.3-62	37 / 19	90	L90	1	**1136760000**
metric, nickel-plated brass							
KSG M20 BS O NI 2 G16	M 20 / 1.5	4-8.4	33 / 16	25	L24	20	**0930481222**
KSG M20 BS O NI 2 G20	M 20 / 1.5	9.6-14	33 / 16	25	L30	20	**0930501222**
KSG M20 BS O NI 2 G20S	M 20 / 1.5	7.2-11.7	33 / 16	25	L24	20	**0930491224**
KSG M25 BS O NI 2 G25	M 25 / 1.5	13.5-20	33 / 16	38	L38	20	**0930511222**
KSG M32 BS O NI 2 G32	M 32 / 1.5	19.5-26.3	33 / 16	46	L46	10	**0930521222**
KSG M40 BS O NI 2 G40	M 40 / 1.5	23-32.2	37 / 16	55	L55	10	**0930531222**
KSG M50 BS O NI 2 G50	M 50 / 1.5	33.2-44.1	37 / 16	65	L65	1	**1136670000**
KSG M50 BS O NI 2 G50S	M 50 / 1.5	28.2-38.2	37 / 16	65	L65	1	**1136660000**
KSG M63 BS O NI 2 G63	M 63 / 1.5	46.7-56	37 / 19	80	L80	1	**1136690000**
KSG M63 BS O NI 2 G63S	M 63 / 1.5	39.3-50.1	37 / 19	80	L80	1	**1136680000**
KSG M75 BS O NI 2 G75	M 75 / 1.5	58.1-68	37 / 19	90	L90	1	**1136710000**
KSG M75 BS O NI 2 G75S	M 75 / 1.5	52.3-62	37 / 19	90	L90	1	**1136700000**

Note

- All cable glands have a thread pitch of 1.5 mm.
- In the case of Ex d applications, the inner threads used for cable glands must meet the requirements of section 5.3 of EN/IEC 60079-1. In the screwed in position, at least 5 threads must be engaged.
- If the cable glands are installed in non-metallic Ex e connection equipment, these must be connected to the protective earth of the system.
- The connection cable must be laid securely and inflexibly to rule out tensile stress.

Klippon® cable glands - Brass - Ex d, IP 68 for armoured and non-armoured encapsulated cables

Barrier cable glands for cables and lines with a single-wire, metal-foil armouring, and braided armouring for Ex-d IIC enclosure, with a volume of more than two litres.

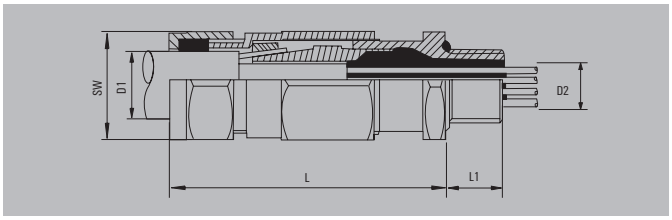

Technical data

Material	Brass
O-ring / Seal insert	Silicone / CR
Temperature range	-60 °C...85 °C
Degree of protection	IP 68 - 10 bar
Water depth	100 m (30 Min.)
Type of armouring	Single-wire armouring, Metal foil armouring, Braided armouring
Encapsulation compound	Processing temperature at 21°C, the sealing compound is hardened after one hour, After 4 hours, the cable gland can be installed and initial commissioning can take place
Approval	ATEX II 2 GD, Ex d IIC / Ex tD A21 IP68, I M2 Ex d I, IECEx Ex d IIC / Ex d I
Note	

Ordering data

Typ	Thread	D1 outer cable Ø	D2 inner cable Ø	L/L1	SW	SUHB	Qty.	Order No.
metric, brass								
KUB M20 BS 0 SC 1 G16	M 20 / 1.5	6.70-16.00	14.00	72 / 16	24	L24	20	**1095340000**
KUB M20 BS 0 SC 2 G16	M 20 / 1.5	9.00-17.60	11.70	72 / 16	24	L24	20	**1095350000**
KUB M20 BS 0 SC 1 G20S	M 20 / 1.5	9.40-10.30	11.70	72 / 16	24	L24	20	**1095360000**
KUB M20 BS 0 SC 2 G20S	M 20 / 1.5	11.50-21.10	11.70	72 / 16	24	L24	20	**1095370000**
KUB M20 BS 0 SC 1 G20	M 20 / 1.5	12.00-13.50	11.70	73 / 16	30	EL30	20	**1095380000**
KUB M20 BS 0 SC 2 G20	M 20 / 1.5	15.50-12.50	14.00	73 / 16	30	EL30	20	**1095390000**
KUB M25 BS 0 SC 1 G25	M 25 / 1.5	16.80-23.90	20.00	83 / 16	38	EL38	20	**1095400000**
KUB M25 BS 0 SC 2 G25	M 25 / 1.5	20.30-27.40	20.00	83 / 16	38	EL38	20	**1095410000**
KUB M32 BS 0 SC 1 G32	M 32 / 1.5	23.20-30.50	26.30	103 / 16	46	EL46	10	**1095420000**
KUB M32 BS 0 SC 2 G32	M 32 / 1.5	26.70-34.00	26.30	103 / 16	46	EL46	10	**1095430000**
KUB M40 BS 0 SC 1 G40	M 40 / 1.5	28.60-36.20	32.20	105 / 16	55	EL55	10	**1095440000**
KUB M40 BS 0 SC 2 G40	M 40 / 1.5	33.00-46.70	38.20	105 / 16	55	EL55	10	**1095450000**
KUB M50 BS 0 SC 1 G50S	M 50 / 1.5	34.80-48.50	44.10	115 / 16	65	EL65	1	**1095460000**
KUB M50 BS 0 SC 2 G50S	M 50 / 1.5	39.40-59.50	50.10	115 / 16	65	EL65	1	**1095470000**
KUB M50 BS 0 SC 1 G50	M 50 / 1.5	41.10-40.60	32.20	115 / 16	65	EL65	1	**1095480000**
KUB M50 BS 0 SC 2 G50	M 50 / 1.5	45.70-42.40	38.20	115 / 16	65	EL65	1	**1095490000**
KUB M63 BS 0 SC 1 G63S	M 63 / 1.5	47.50-61.20	56.00	115 / 19	80	EL80	1	**1095500000**
KUB M63 BS 0 SC 2 G63S	M 63 / 1.5	52.10-72.20	62.00	115 / 19	80	EL80	1	**1095510000**
KUB M63 BS 0 SC 1 G63	M 63 / 1.5	53.80-53.20	44.10	115 / 19	80	EL80	1	**1095520000**
KUB M63 BS 0 SC 2 G63	M 63 / 1.5	58.40-54.80	50.10	115 / 19	80	EL80	1	**1095530000**
KUB M75 BS 0 SC 1 G75S	M 75 / 1.5	60.20-73.40	68.00	122 / 19	90	EL90	1	**1095540000**
KUB M75 BS 0 SC 2 G75S	M 75 / 1.5	64.80-78.00	68.00	122 / 19	90	EL90	1	**1095550000**
KUB M75 BS 0 SC 1 G75	M 75 / 1.5	66.50-65.80	56.00	122 / 19	90	EL90	1	**1095560000**
KUB M75 BS 0 SC 2 G75	M 75 / 1.5	71.10-68.00	62.00	122 / 19	90	EL90	1	**1095570000**

Note
- All cable glands have a thread pitch of 1.5 mm.
- In the case of Ex d applications, the inner threads used for cable glands must meet the requirements of section 5.3 of EN/IEC 60079-1. In the screwed in position, at least 5 threads must be engaged.
- The connection cable must be laid securely and inflexibly to rule out tensile stress.

Klippon® cable glands - Brass - Ex d, IP 68 for armoured and non-armoured encapsulated cables

Barrier cable glands for cables and lines with a single-wire, metal-foil armouring, and braided armouring for Ex-d IIC enclosure, with a volume of more than two litres.

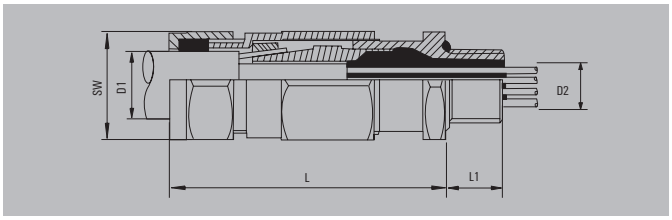

Technical data

Material	Brass, nickel-plated
O-ring / Seal insert	Silicone / Silicone
Temperature range	-60 °C...85 °C
Degree of protection	IP 68 - 10 bar
Water depth	100 m (30 Min.)
Type of armouring	Single-wire armouring, Metal foil armouring, Braided armouring
Encapsulation compound	Processing temperature at 21°C, the sealing compound is hardened after one hour, After 4 hours, the cable gland can be installed and initial commissioning can take place
Approval	ATEX II 2 GD, Ex d IIC / Ex tD A21 IP68, I M2 Ex d I, IECEx Ex d IIC / Ex d I
Note	

Ordering data

Typ	Thread	D1 outer cable Ø	D2 inner cable Ø	L/L1	SW	SUHB	Qty.	Order No.
metric, nickel-plated brass								
KUB M20 BS 0 NI 1 G16	M 20 / 1.5	6.70-10.30	11.70	72 / 16	24	L24	20	**1095100000**
KUB M20 BS 0 NI 2 G16	M 20 / 1.5	9.00-13.50	11.70	72 / 16	24	L24	20	**1095110000**
KUB M20 BS 0 NI 1 G20	M 20 / 1.5	12.00-17.60	11.70	73 / 16	30	EL30	20	**1095140000**
KUB M20 BS 0 NI 2 G20	M 20 / 1.5	15.50-21.10	11.70	73 / 16	30	EL30	20	**1095150000**
KUB M20 BS 0 NI 1 G20S	M 20 / 1.5	9.40-12.50	14.00	72 / 16	24	L24	20	**1095120000**
KUB M20 BS 0 NI 2 G20S	M 20 / 1.5	11.50-16.00	14.00	72 / 16	24	L24	20	**1095130000**
KUB M25 BS 0 NI 1 G25	M 25 / 1.5	16.80-23.90	20.00	83 / 16	38	EL38	20	**1095160000**
KUB M25 BS 0 NI 2 G25	M 25 / 1.5	20.30-27.40	20.00	83 / 16	38	EL38	20	**1095170000**
KUB M32 BS 0 NI 1 G32	M 32 / 1.5	23.20-30.50	26.30	103 / 16	46	EL46	10	**1095180000**
KUB M32 BS 0 NI 2 G32	M 32 / 1.5	26.70-34.00	26.30	103 / 16	46	EL46	10	**1095190000**
KUB M40 BS 0 NI 1 G40	M 40 / 1.5	28.60-36.20	32.20	105 / 16	55	EL55	10	**1095200000**
KUB M40 BS 0 NI 2 G40	M 40 / 1.5	33.00-40.60	32.20	105 / 16	55	EL55	10	**1095210000**
KUB M50 BS 0 NI 1 G50	M 50 / 1.5	41.10-48.50	44.10	115 / 16	65	EL65	1	**1095240000**
KUB M50 BN 0 NI 2 G50	M 50 / 1.5	45.70-53.20	44.10	115 / 16	65	EL65	1	**1095250000**
KUB M50 BS 0 NI 1 G50S	M 50 / 1.5	34.80-42.40	38.20	115 / 16	65	EL65	1	**1095220000**
KUB M50 BS 0 NI 2 G50S	M 50 / 1.5	39.40-46.70	38.20	115 / 16	65	EL65	1	**1095230000**
KUB M63 BS 0 NI 1 G63	M 63 / 1.5	53.80-61.20	56.00	115 / 19	80	EL80	1	**1095280000**
KUB M63 BS 0 NI 2 G63	M 63 / 1.5	58.40-65.80	56.00	115 / 19	80	EL80	1	**1095290000**
KUB M63 BS 0 NI 1 G63S	M 63 / 1.5	47.50-54.80	50.10	115 / 19	80	EL80	1	**1095260000**
KUB M63 BS 0 NI 2 G63S	M 63 / 1.5	52.10-59.50	50.10	115 / 19	80	EL80	1	**1095270000**
KUB M75 BS 0 NI 1 G75	M 75 / 1.5	66.50-73.40	68.00	122 / 19	90	EL90	1	**1095320000**
KUB M75 BS 0 NI 2 G75	M 75 / 1.5	71.10-78.00	68.00	122 / 19	90	EL90	1	**1095330000**
KUB M75 BS 0 NI 1 G75S	M 75 / 1.5	60.20-68.00	62.00	122 / 19	90	EL90	1	**1095300000**
KUB M75 BS 0 NI 2 G75S	M 75 / 1.5	64.80-72.20	62.00	122 / 19	90	EL90	1	**1095310000**

Note
- All cable glands have a thread pitch of 1.5 mm.
- In the case of Ex d applications, the inner threads used for cable glands must meet the requirements of section 5.3 of EN/IEC 60079-1. In the screwed in position, at least 5 threads must be engaged.
- The connection cable must be laid securely and inflexibly to rule out tensile stress.

Lock nuts - Plastic 7035

Lock nuts with collar for preventing enclosure damage on installation. These are used to secure plastic cable glands and sealing plugs.

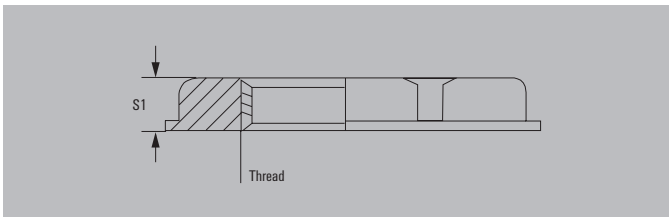

Technical data

Material / Colour	Polyamid 6 (PA6 - GF30) / RAL 7035
Temperature range	-20 °C...80 °C
Flammability rating	V-2

Note

Ordering data

Typ	Thread	S1	SW	Qty.	Order No.
metric					
SKMU M12 - K GR	M 12 / 1.5	5.00	18	100	**1772440000**
SKMU M16 - K GR	M 16 / 1.5	5.00	22	100	**1772450000**
SKMU M20 - K GR	M 20 / 1.5	6.00	26	100	**1772460000**
SKMU M25 - K GR	M 25 / 1.5	6.00	32	100	**1772470000**
SKMU M32 - K GR	M 32 / 1.5	7.00	41	100	**1772480000**
SKMU M40 - K GR	M 40 / 1.5	7.00	50	50	**1772490000**
SKMU M50 - K GR	M 50 / 1.5	8.00	60	10	**1772500000**
SKMU M63 - K GR	M 63 / 1.5	8.00	75	10	**1772510000**
PG					
SKMU PG7-K GR	PG 7	5.00	19	100	**1697440000**
SKMU PG9-K GR	PG 9	5.00	22	100	**1697450000**
SKMU PG11-K GR	PG 11	5.00	24	100	**1697460000**
SKMU PG 13.5-K GR	PG 13.5	6.00	27	100	**1697470000**
SKMU PG16-K GR	PG 16	6.00	30	100	**1697480000**
SKMU PG21-K GR	PG 21	7.00	36	100	**1698220000**
SKMU PG29-K GR	PG 29	7.00	46	50	**1698230000**
SKMU PG36-K GR	PG 36	8.00	60	25	**1698240000**
SKMU PG42-K GR	PG 42	8.00	65	25	**1698250000**
SKMU PG48-K GR	PG 48	8.00	70	25	**1719090000**

Note Further versions on request

Lock nuts - Plastic 9005

Lock nuts with collar for preventing enclosure damage on installation. These are used to secure plastic cable glands and sealing plugs - recommended for Ex e and Ex i plastic cable glands.

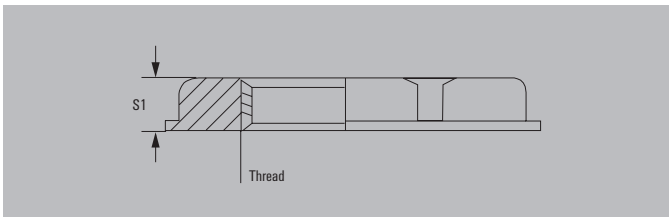

Technical data

Material / Colour	Polyamid 6 (PA6 - GF30) / RAL 9005
Temperature range	-20 °C...80 °C
Flammability rating	V-2

Note

Ordering data

Typ	Thread	S1	SW	Qty.	Order No.
metric					
SKMU M12-K SW	M 12 / 1.5	5.00	18	100	**1806540000**
SKMU M16 K SW	M 16 / 1.5	5.00	22	100	**1736920000**
SKMU M20 K SW	M 20 / 1.5	6.00	26	100	**1736930000**
SKMU M25 K SW	M 25 / 1.5	6.00	32	25	**1736940000**
SKMU M32 K SW	M 32 / 1.5	7.00	41	100	**1736950000**
SKMU M40 K SW	M 40 / 1.5	7.00	50	10	**1736960000**
SKMU M50 K SW	M 50 / 1.5	8.00	60	5	**1736970000**
SKMU M63 K SW	M 63 / 1.5	8.00	75	5	**1736980000**
PG					
SKMU PG7-K SW	PG 7	5.00	19	50	**1719100000**
SKMU PG9-K SW	PG 9	5.00	22	50	**1719110000**
SKMU PG11-K SW	PG 11	5.00	24	50	**1719120000**
SKMU PG13.5-K SW	PG 13.5	6.00	27	50	**1719130000**
SKMU PG16-K SW	PG 16	6.00	30	25	**1719140000**
SKMU PG21-K SW	PG 21	7.00	36	20	**1719150000**
SKMU PG29-K SW	PG 29	7.00	46	20	**1719160000**
SKMU PG36-K SW	PG 36	8.00	60	10	**1719170000**
SKMU PG42-K SW	PG 42	8.00	65	10	**1719180000**
SKMU PG48-K SW	PG 48	8.00	70	5	**1719190000**

Note

Lock nuts - Brass - Nickel-plated

A lock nut is used to secure the brass cable glands and sealing plugs – also recommended when working with Ex applications.

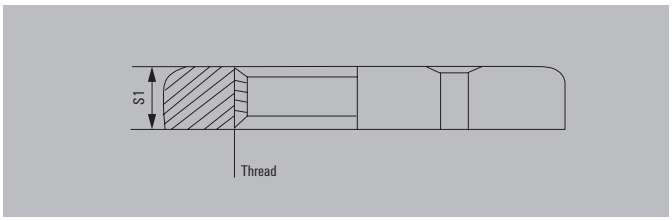

Technical data

Material	Brass, nickel-plated

Note

Ordering data

Typ	Thread	S1	SW	Qty.	Order No.
metric					
SKMU M12 - MS	M 12 / 1.5	2.8	14	50	**1772360000**
SKMU M16 MS	M 16 / 1.5	2.8	19	50	**1736990000**
SKMU M20 MS	M 20 / 1.5	3	24	50	**1737000000**
SKMU M25 MS	M 25 / 1.5	3	28	25	**1737010000**
SKMU M32 MS	M 32 / 1.5	4	36	20	**1737020000**
SKMU M40 MS	M 40 / 1.5	4.5	44	10	**1737030000**
SKMU M50 MS	M 50 / 1.5	5	54	5	**1737040000**
SKMU M63 MS	M 63 / 1.5	6	70	5	**1737050000**
SKMU M75 MS	M 75 / 1.5	8	85	5	**1737060000**
PG					
SKMU PG7-MS	PG 7	2.8	15	100	**1694070000**
SKMU PG9-MS	PG 9	2.8	18	100	**1694080000**
SKMU PG11-MS	PG 11	3	21	100	**1694090000**
SKMU PG13.5-MS	PG 13.5	3	23	100	**1694100000**
SKMU PG16-MS	PG 16	3	26	100	**1694110000**
SKMU PG21-MS	PG 21	3.5	32	50	**1719200000**
SKMU PG29-MS	PG 29	4	41	50	**1719210000**
SKMU PG36-MS	PG 36	5	51	50	**1719220000**
SKMU PG42-MS	PG 42	5	60	50	**1719230000**
SKMU PG48-MS	PG 48	5.5	64	50	**1719240000**

Note Further versions on request

Lock nuts - Brass - Natural

A lock nut made from untreated brass is used to secure the brass cable glands and sealing plugs – also recommended when working with Ex applications.

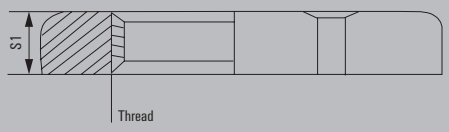

Technical data

Material	Brass

Note

Ordering data

Typ	Thread	S1	SW	Qty.	Order No.
metric					
SKMU M16 MS SC	M 16 / 1.5	4	22	50	**0930640001**
SKMU M20 MS SC	M 20 / 1.5	4	24	50	**0930640002**
SKMU M25 MS SC	M 25 / 1.5	4	30	25	**0930640003**
SKMU M32 MS SC	M 32 / 1.5	4	40	20	**0930640004**
SKMU M40 MS SC	M 40 / 1.5	4.5	50	10	**0930640005**
SKMU M50 MS SC	M 50 / 1.5	5	65	5	**0930640006**
SKMU M63 MS SC	M 63 / 1.5	6.5	75	5	**0930640007**
SKMU M75 MS SC	M 75 / 1.5	7	90	5	**0930640008**
SKMU M80 MS SC	M 80 / 1.5	7	90	5	**0930640009**
SKMU M85 MS SC	M 85 / 1.5	7	104.8	5	**0930640010**
SKMU M90 MS SC	M 90 / 1.5	7	104.8	5	**0930640011**

Note

Lock nuts - Brass - EMC

Serrated locks are used for securing brass cable glands and sealing plugs – specially equipped with 6 edges which contact the enclosure when the lock nut is tightened.

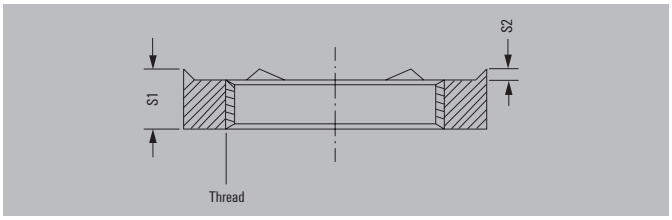

Technical data

Material	Brass, nickel-plated

Note

Ordering data

Typ	Thread	S1	SW	Qty.	Order No.
metric					
SKMU EMV M12	M 12 / 1.5	3.6	15	50	**1777610000**
SKMU EMV M16	M 16 / 1.5	3.6	19	50	**1777620000**
SKMU EMV M20	M 20 / 1.5	3.6	24	50	**1777630000**
SKMU EMV M25	M 25 / 1.5	3.6	30	20	**1777640000**
SKMU EMV M32	M 32 / 1.5	4.1	36	20	**1777650000**
SKMU EMV M40	M 40 / 1.5	4.6	46	10	**1777660000**
SKMU EMV M50	M 50 / 1.5	4.6	60	10	**1777670000**
SKMU EMV M63	M 63 / 1.5	6.6	70	10	**1777680000**
PG					
SKMU EMV PG7	PG 7	4.7	15	20	**1718900000**
SKMU EMV PG9	PG 9	4.7	18	20	**1718910000**
SKMU EMV PG11	PG 11	4.7	21	20	**1718920000**
SKMU EMV PG13.5	PG 13.5	4.7	23	10	**1718930000**
SKMU EMV PG16	PG 16	4.7	26	10	**1718940000**
SKMU EMV PG21	PG 21	5.2	32	10	**1718950000**
SKMU EMV PG29	PG 29	5.7	41	15	**1718960000**
SKMU EMV PG 36	PG 36	4.6	51	1	**1777710000**
SKMU EMV PG 42	PG 42	4.6	58	1	**1777700000**
SKMU EMV PG 48	PG 48	5.6	64	1	**1777690000**

Note Further versions on request

Flat IP washer - Standard - Polyethylene

Flat IP washer for increasing the degree of protection for cable glands and sealing plugs.
The IP washer is also suitable as a replacement for O-rings.

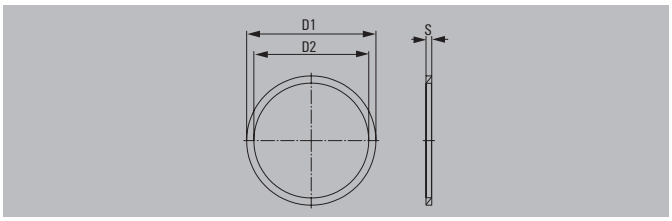

Technical data

Material / Colour	Polyethylene / Transparent
Temperature range	-30 °C...90 °C

Note

Ordering data

Typ	Thread	D1	D2	S	Qty.	Order No.
metric						
GWDR M12-PO	M 12 / 1.5	16.00	12.00	1.50	50	**1777920000**
GWDR M16-PO	M 16 / 1.5	20.00	16.00	1.50	50	**1777930000**
GWDR M20-PO	M 20 / 1.5	25.00	20.40	2.00	100	**1777940000**
GWDR M25-PO	M 25 / 1.5	30.00	25.00	2.00	50	**1777950000**
GWDR M32-PO	M 32 / 1.5	38.00	32.00	2.00	50	**1777960000**
GWDR M40-PO	M 40 / 1.5	45.00	40.00	2.00	50	**1777970000**
GWDR M50-PO	M 50 / 1.5	56.00	50.00	2.00	50	**1777980000**
GWDR M63-PO	M 63 / 1.5	70.00	63.00	2.00	50	**1777990000**
PG						
GWDR PG7-PO	PG 7	16.50	12.50	1.60	100	**1719440000**
GWDR PG9-PO	PG 9	19.00	15.20	1.60	100	**1719450000**
GWDR PG11-PO	PG 11	22.50	18.60	1.80	100	**1719460000**
GWDR PG13.5-PO	PG 13.5	25.00	20.40	1.80	100	**1719470000**
GWDR PG16-PO	PG 16	27.00	22.50	1.80	100	**1719480000**
GWDR PG21-PO	PG 21	33.50	28.30	2.20	100	**1719490000**
GWDR PG29-PO	PG 29	43.50	37.00	2.20	50	**1719500000**
GWDR PG36-PO	PG 36	55.00	47.00	2.70	50	**1719510000**
GWDR PG42-PO	PG 42	63.00	54.00	3.20	10	**1719520000**
GWDR PG48-PO	PG 48	69.00	59.30	3.20	5	**1719530000**

Note Further versions on request

Flat gasket seals - Standard - Neoprene

Flat gasket seal to increase the degree of protection for cable glands and sealing plugs – recommended for use in Ex applications. The seal is also suitable as a replacement for O-rings.

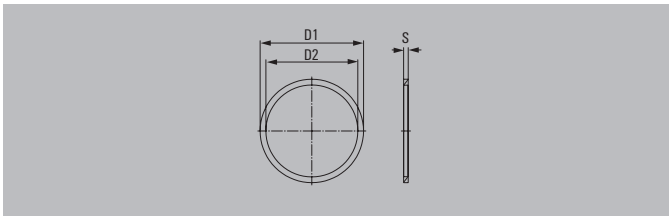

Technical data

Material / Colour	Neoprene / RAL 9005
Temperature range	-30 °C...100 °C

Note

Ordering data

Typ	Thread	D1	D2	S	Qty.	Order No.
metric						
GWDR M12-NP	M 12 / 1.5	18.00	12.00	1.20	50	**1913320000**
GWDR M16-NP	M 16 / 1.5	22.00	16.00	1.20	50	**1736230000**
GWDR M20-NP	M 20 / 1.5	24.00	20.00	1.20	50	**1736240000**
GWDR M25-NP	M 25 / 1.5	30.00	25.00	1.50	50	**1736250000**
GWDR M32-NP	M 32 / 1.5	42.00	32.00	1.50	50	**1736260000**
GWDR M40-NP	M 40 / 1.5	52.00	40.00	1.50	20	**1736270000**
GWDR M50-NP	M 50 / 1.5	63.00	50.00	1.50	20	**1736280000**
GWDR M63-NP	M 63 / 1.5	77.00	63.00	2.00	10	**1736290000**
PG						
GWDR PG7-NP	PG 7	17.00	11.60	1.20	100	**1719540000**
GWDR PG9-NP	PG 9	21.00	14.00	1.20	100	**1719550000**
GWDR PG11-NP	PG 11	24.00	17.00	1.20	100	**1719560000**
GWDR PG13.5-NP	PG 13.5	27.00	19.50	1.20	100	**1719570000**
GWDR PG16-NP	PG 16	30.00	22.50	1.20	100	**1719580000**
GWDR PG21-NP	PG 21	35.00	28.30	1.50	100	**1719590000**
GWDR PG29-NP	PG 29	45.00	37.00	1.50	50	**1719600000**
GWDR PG36-NP	PG 36	60.00	47.00	1.50	20	**1719610000**
GWDR PG42-NP	PG 42	65.00	54.00	1.50	10	**1719620000**
GWDR PG48-NP	PG 48	71.00	59.30	1.50	5	**1719630000**

Note Further versions on request

Flat IP washer - Standard - Nylon

Flat nylon IP washer, used for sealing large surfaces, for example around cable glands on enclosures.

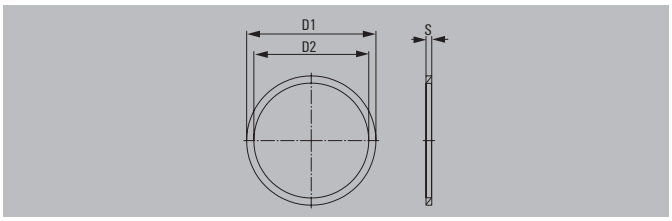

Technical data

Material / Colour	Nylon 6 / RAL 3020
Temperature range	-40 °C...135 °C

Note

Ordering data

Typ	Thread	D1	D2	S	Qty.	Order No.
metric						
KSWN M16	M 16 / 1.5	25.00	16.50	2.00	25	**1076630000**
KSWN M20	M 20 / 1.5	29.40	20.70	2.00	25	**0930730002**
KSWN M25	M 25 / 1.5	38.10	25.70	2.00	25	**1076640000**
KSWN M32	M 32 / 1.5	42.50	32.50	2.00	25	**1076650000**
KSWN M40	M 40 / 1.5	52.00	40.50	2.00	25	**0899780000**
KSWN M50	M 50 / 1.5	65.00	50.50	2.00	25	**0900660000**
KSWN M63	M 63 / 1.5	79.40	63.50	2.00	25	**1076660000**
KSWN M75	M 75 / 1.5	90.50	75.50	2.00	25	**1076670000**

Note

Flat IP washer - Standard - Vulcanised fibre

Flat nylon IP washer made from vulcanised fibre, used for sealing large surfaces, for example around cable glands on enclosures.

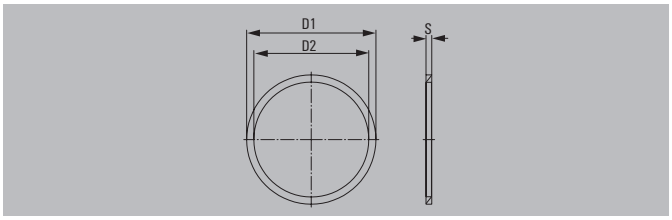

Technical data

Material / Colour	Vulcanized fibre / RAL 3011
Temperature range	-40 °C...95 °C

Note

Ordering data

Typ	Thread	D1	D2	S	Qty.	Order No.
metric						
KSWF M16	M 16 / 1.5	25.00	16.50	2.00	25	**1076680000**
KSWF M20	M 20 / 1.5	29.40	20.70	2.00	25	**0899750000**
KSWF M25	M 25 / 1.5	38.10	25.70	2.00	25	**0899770000**
KSWF M32	M 32 / 1.5	42.50	32.50	2.00	25	**1076690000**
KSWF M40	M 40 / 1.5	52.00	40.50	2.00	25	**1076710000**
KSWF M50	M 50 / 1.5	65.00	50.50	2.00	25	**1076720000**
KSWF M63	M 63 / 1.5	79.40	63.50	2.00	25	**1076730000**
KSWF M75	M 75 / 1.5	90.50	75.50	2.00	25	**1076740000**
KSWF M90	M 90 / 1.5	114.30	90.50	2.00	25	**1192820000**

Note

Accessories - Earth tags - Brass - Nickel plated

Earth tags are best used when a cable shielding is being tightened onto the cable gland, and when it has the same potential as another cable gland on the enclosure.

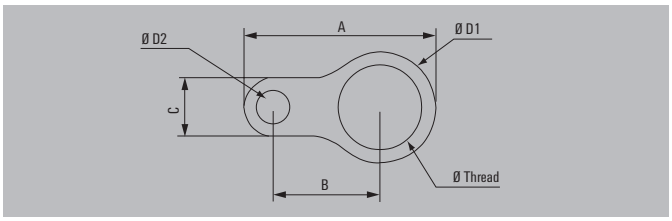

Technical data

Material	Brass, nickel-plated

Note

Ordering data

Typ	Thread	A	B	C	D1	D2	Qty.	Order No.
metric								
EA-RING MS/M 16	M 16 / 1.5	48.75	30.00	13.00	24.50	6.75	20	**1736480000**
EA-RING MS/M 20	M 20 / 1.5	53.8	33.00	13.00	28.60	7.00	20	**1736490000**
EA-RING MS/M 25	M 25 / 1.5	61.5	36.00	17.00	34.00	10.50	20	**1736500000**
EA-RING MS/M 32	M 32 / 1.5	73	41.00	22.00	42.00	12.20	20	**1736510000**
EA-RING MS/M 40	M 40 / 1.5	86.5	44.50	30.00	54.00	13.50	10	**1736520000**
EA-RING MS/M 50	M 50 / 1.5	111.5	58.00	40.00	67.00	13.50	10	**1736530000**
EA-RING MS/M 63	M 63 / 1.5	125.5	67.00	40.00	77.00	13.50	10	**1736540000**
EA-RING MS/M 75	M 75 / 1.5	137.5	73.00	40.00	89.00	13.50	10	**1736550000**

Note Further versions on request

Accessories - Earth tags - Brass - Natural

Earth tags are best used when a cable shielding is being tightened onto the cable gland, and when it has the same potential as another cable gland on the enclosure.

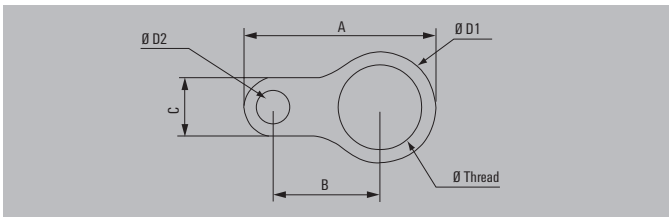

Technical data

Material	Brass

Note

Ordering data

Typ	Thread	A	B	C	D1	D2	Qty.	Order No.
metric								
EA-RING MS/M16 SC	M 16 / 1.5	50.8	31.80	12.80	16.30	6.90	20	**0930710001**
EA-RING MS/M20 SC	M 20 / 1.5	54	33.00	12.80	21.80	6.90	20	**0930710002**
EA-RING MS/M25 SC	M 25 / 1.5	60.2	36.50	12.80	27.30	6.90	20	**0930710003**
EA-RING MS/M32 SC	M 32 / 1.5	74.6	42.50	22.30	33.80	11.80	20	**0930710004**
EA-RING MS/M40 SC	M 40 / 1.5	86.7	45.50	31.70	42.70	13.50	10	**0930710005**
EA-RING MS/M50 SC	M 50 / 1.5	111	58.10	41.30	50.70	13.50	10	**0930710006**
EA-RING MS/M63 SC	M 63 / 1.5	128.7	66.80	41.30	63.50	13.50	10	**0930710007**
EA-RING MS/M75 SC	M 75 / 1.5	141.3	73.00	41.30	76.30	13.50	10	**0930710008**

Note Other versions on request

Accessories - Shrouds - PVC

The cover shroud a cable gland before and after the installation. It also protects against external environmental influences.

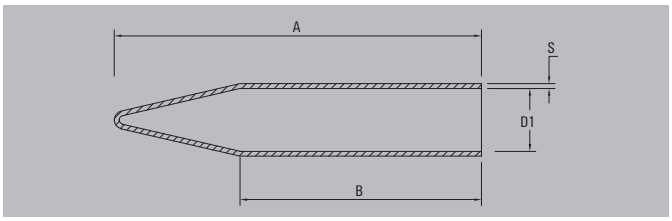

Technical data

Material / Colour	PVC / RAL 9005
Temperature range	-25 °C...70 °C
Hardness [Shore A]	65

Note

Ordering data

Typ	A	B	D1	S	Qty.	Order No.
metric						
KSP L24	120	70.00	25.00	1.50	10	**1736570000**
KSP L30	110	55.00	30.00	1.50	10	**1736580000**
KSP L38	160	60.00	37.00	1.50	10	**1736590000**
KSP L46	160	60.00	46.00	1.50	10	**1736600000**
KSP L55	160	60.00	55.00	1.50	10	**1736610000**
KSP L65	210	70.00	65.00	1.50	10	**1736620000**
KSP L80	240	90.00	80.00	1.50	10	**1736630000**
KSP L90	240	90.00	90.00	1.50	10	**1736640000**
KSP EL30*	127.5	75.00	30.00	1.50	10	**1736670000**
KSP EL38*	168	80.00	38.00	1.50	10	**1736680000**
KSP EL46*	198	95.00	46.00	1.50	10	**1076750000**
KSP EL55*	210	105.00	55.00	1.50	10	**1076760000**
KSP EL65*	250	115.00	65.00	1.50	10	**1076770000**
KSP EL80*	270	115.00	80.00	2.00	10	**1076780000**
KSP EL90*	285	120.00	90.00	2.00	10	**1076790000**

Note *These shrouds have been specially designed for the Klippon® KDSU and Klippon® KUB cable glands.

Accessories - Shrouds - Silicone

The cover shroud a cable gland before and after the installation. It also protects against external environmental influences.

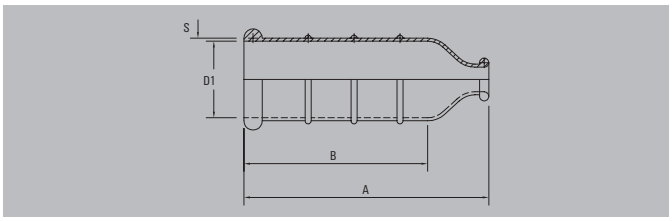

Technical data

Material / Colour	Silicone / RAL 5015
Temperature range	-60 °C...200 °C
Hardness [IRHD]	65

Note

Ordering data

Typ	A	B	D1	S	Qty.	Order No.
metric						
KSP L24 S	80	60.00	25.00	1.50	10	**0930700001**
KSP L30 S	80	60.00	30.00	1.50	10	**0930700002**
KSP L38 S	85	65.00	37.00	1.50	10	**0930700003**
KSP L46 S	95	70.00	46.00	1.50	10	**0930700004**
KSP L55 S	95	70.00	55.00	1.50	10	**0930700005**
KSP L65 S	110	80.00	65.00	1.50	10	**0930700006**
KSP L80 S	120	90.00	80.00	1.50	10	**0930700007**
KSP L90 S	140	110.00	90.00	1.50	10	**0930700008**
KSP L 104 S	160	130.00	104.00	1.50	10	**1193940000**
KSP L114 S	180	150.00	114.00	1.50	10	**1192790000**

Note

Accessories - Serrated washers, Stainless steel

Serrated stainless steel washers to prevent mounted cable glands from loosening.

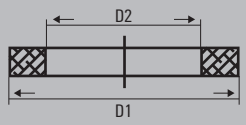

Technical data

Material	Stainless steel 1.4404 (316L)

Note

Ordering data

Typ	Thread	D1	D2	Qty.	Order No.
metric					
SZS M16	M 16 / 1.5	25.50	17.30	50	**1736300000**
SZS M20	M 20 / 1.5	32.40	21.30	10	**1736310000**
SZS M25	M 25 / 1.5	37.40	25.30	10	**1736320000**
SZS M32	M 32 / 1.5	48.00	33.00	20	**1736330000**
SZS M40	M 40 / 1.5	60.00	41.00	5	**1736340000**
SZS M50	M 50 / 1.5	71.00	51.00	5	**1736350000**
SZS M63	M 63 / 1.5	87.00	64.00	5	**1736360000**

Note

Sealing plugs - Plastic

Plastic sealing plug with cross-head is used to seal surplus threaded holes and to maintain the IP protection degree.

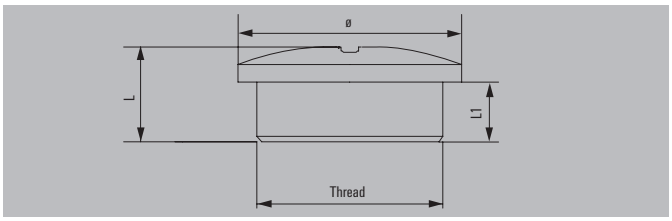

Technical data

Material / Colour	Polyamid 6 (PA6 - GF30) / RAL 7035
Temperature range	-40 °C...100 °C
Protection degree	IP 54
Flammability rating	V-2

Note	Optional sealing ring

Ordering data

Typ	Thread	L	L1	Head Ø	Qty.	Order No.
metric						
VP M12 K54	M 12 / 1.5	5.5	6	15.00	100	**1776930000**
VP M16 K54	M 16 / 1.5	5.5	7	20.00	100	**1776920000**
VP M20 K54	M 20 / 1.5	6.5	7	24.00	100	**1776910000**
VP M25 K54	M 25 / 1.5	7	10	30.00	100	**1776900000**
VP M32 K54	M 32 / 1.5	7	11	37.00	100	**1776940000**
VP M40 K54	M 40 / 1.5	7	13	46.00	50	**1776950000**
VP M50 K54	M 50 / 1.5	8.5	14	56.00	25	**1776960000**
VP M63 K54	M 63 / 1.5	8.5	15	69.50	50	**1776970000**
PG						
VP 7-K54	PG 7	8	6	15.00	50	**1719250000**
VP 9-K54	PG 9	9.5	5	19.00	100	**0294760000**
VP 11-K54	PG 11	10	6.5	22.00	100	**0294860000**
VP 13.5-K54	PG 13.5	10	5	25.00	100	**0294960000**
VP 16-K54	PG 16	10	5	27.00	100	**0295060000**
VP 21-K54	PG 21	12	8	33.00	100	**0295160000**
VP 29-K54	PG 29	11.5	8	44.00	50	**0501160000**
VP 36-K54	PG 36	14	10	55.00	25	**0501260000**
VP 42-K54	PG 42	14	10	62.00	10	**0501360000**
VP 48-K54	PG 48	16	12	69.00	5	**1719260000**

Note	Other versions available on request. The sealing plugs must be tightened „hand-tight" with the screwdriver.

Sealing plugs - Brass - Nickel-plated

Brass sealing plug with cross-head is used to seal surplus threaded holes and to maintain the IP protection degree.

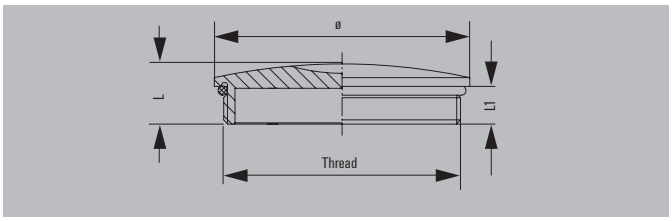

Technical data

Material	Brass, nickel-plated
O-Ring	NBR
Temperature range	-40 °C...100 °C
Protection degree	IP 68

Note

Ordering data

Typ	Thread	L	L1	Head Ø	Qty.	Order No.
metric						
VP M12-MS65	M 12 / 1.5	5	5	14.00	100	**1777720000**
VP M16-MS65	M 16 / 1.5	8	5	18.00	100	**1777730000**
VP M20-MS65	M 20 / 1.5	9.5	6.5	22.00	100	**1777740000**
VP M25-MS65	M 25 / 1.5	11	7	28.00	100	**1777750000**
VP M32-MS65	M 32 / 1.5	12	8	35.00	50	**1777760000**
VP M40-MS65	M 40 / 1.5	13	8	44.00	50	**1777770000**
VP M50-MS65	M 50 / 1.5	15	9	54.00	25	**1777780000**
VP M63-MS65	M 63 / 1.5	16	10	67.00	10	**1777790000**
PG						
VP 7-MS65	PG 7	7.5	5	15.00	100	**0521600000**
VP 9-MS65	PG 9	8	5	18.00	100	**0294700000**
VP 11-MS65	PG 11	8	5	22.00	100	**0294800000**
VP 13.5-MS65	PG 13.5	9	6	24.00	100	**0294900000**
VP 16-MS65	PG 16	9	6	26.00	100	**0295000000**
VP 21-MS65	PG 21	10	6	32.00	100	**0295100000**
VP 29-MS65	PG 29	12	8	40.00	50	**0501100000**
VP 36-MS65	PG 36	15	9	50.00	25	**0501200000**
VP 42-MS65	PG 42	16	10	57.00	10	**0501300000**
VP 48-MS65	PG 48	16	10	64.00	5	**1719270000**

Note Other versions available on request. The sealing plugs must be tightened „hand-tight" with the screwdriver.

Sealing plugs - Plastic - Ex e

Sealing plug with cross-head is used to seal surplus threaded holes and to maintain the IP protection degree – especially for Ex-e Ex applications.

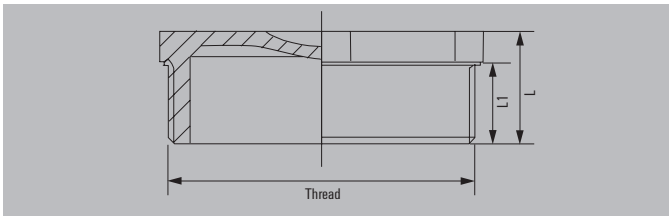

Technical data

Material / Colour	Polyamide / RAL 9005
Temperature range	-20 °C...80 °C
Protection degree	IP 66
Protection degree with GWDR	IP 68
UL 94 flammability rating	V-2
Approval	II 2 GD, Ex d IIC, Ex e II, Ex tD

Note Optional sealing ring

Ordering data

Typ	Thread	L	L1	SW	Qty.	Order No.
metric						
VP M16-EXE SW	M 16 / 1.5	19	15	19	50	**1737070000**
VP M20-EXE SW	M 20 / 1.5	19	15	23	50	**1737080000**
VP M25-EXE SW	M 25 / 1.5	20	15	28	100	**1737090000**
VP M32-EXE SW	M 32 / 1.5	20.5	15	36	20	**1737100000**
VP M40-EXE SW	M 40 / 1.5	20.5	15	44	10	**1737110000**
VP M50-EXE SW	M 50 / 1.5	21	15	54	5	**1737120000**
VP M63-EXE SW	M 63 / 1.5	23.5	15	67	5	**1737130000**

Note Refer to the enclosed installation instructions for the tightening torque.

Sealing plugs - Brass - Ex e, Ex d

Sealing plug is used for sealing surplus threaded holes to ensure the IP protection degree - especially for Ex-e and Ex-d applications.

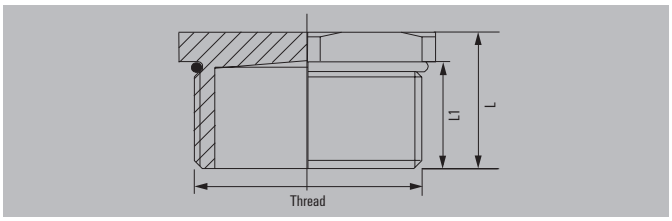

Technical data

Material	Brass, nickel-plated
O-Ring	NBR
Temperature range	-40 °C...100 °C
Protection degree	IP 68
Approval	II 2 GD, Ex d IIC, Ex e II, Ex tD

Note

Ordering data

Typ	Thread	L	L1	SW	Qty.	Order No.
metric						
VP M16 EXE MS	M 16 / 1.5	15	12	17	50	**1210890000**
VP M20 EXE MS	M 20 / 1.5	15	12	23	50	**1210900000**
VP M25 EXE MS	M 25 / 1.5	15.5	12	29	25	**1210910000**
VP M32 EXE MS	M 32 / 1.5	16	12	39	10	**1210920000**
VP M40 EXE MS	M 40 / 1.5	19	15	45	10	**1210930000**
VP M50 EXE MS	M 50 / 1.5	20	15	58	5	**1210940000**
VP M63 EXE MS	M 63 / 1.5	26	19	70	5	**1210950000**

Note Refer to the enclosed installation instructions for the tightening torque.

Sealing plugs - Brass - Ex e, Ex d, IP 54

Sealing plug with accessible hexagon recess. It is used to seal unused threaded holes so that cable glands can be connected in the future. Approved for use with the pressure-resistant Ex d encapsulation.

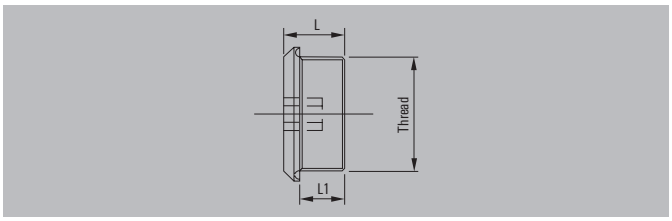

Technical data

Material	Brass, nickel-plated
Temperature range	-50 °C...180 °C
Protection degree	IP 54
Approval	ATEX I M2 II 2 GD Ex d I/IIC Mb Gb Ex tb IIIDb IP6X, IECEx Ex d I/IIC & Ex e I/IIC MbGb Ex tb IIC Db IP6X

Note

Ordering data

Typ	Thread	L1	Qty.	Order No.
metric				
KSPA M16 BNI	M 16	16	20	**0887490000**
KSPA M20 BNI	M 20	16	20	**0886670000**
KSPA M25 BNI	M 25	16	20	**0886680000**
KSPA M32 BNI	M 32	16	10	**0886690000**
KSPA M40 BNI	M 40	16	10	**0886700000**
KSPA M50 BNI	M 50	16	1	**0886710000**
KSPA M63 BNI	M 63	16	1	**1075370000**
KSPA M75 BNI	M 75	16	1	**1075380000**

Note

Sealing plugs - Brass and Stainless steel - Ex e, Ex d, IP 66 / IP 68

Dome head sealing plug with accessible hexagon recess. It is used to seal unused threaded holes so that cable glands can be connected in the future. Available in brass and stainless steel. Approved for use with the pressure-resistant Ex d encapsulation and increased safety Ex e.

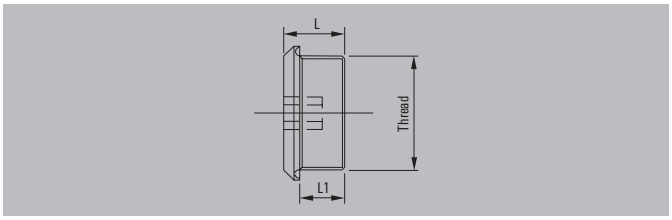

Technical data

O-Ring	NBR
Temperature range	-30 °C...100 °C
Protection degree	IP 66, IP 68
Approval	ATEX I M2 II 2 GD Ex dI/IIC Mb Gb Ex e I/IIC Mb Gb Ex tb IIIC Db IP6X, IECEx Ex d I/IIC & Ex e I/IIC MbGb Ex tb IIC Db IP6X

Note

Ordering data

Typ	Thread	L	L1	Qty.	Order No.
Stainless steel					
KSPM M16 SSC	M 16	21.5	16	20	**0887500000**
KSPM M20 SSC	M 20	21.5	16	20	**0886720000**
KSPM M25 SSC	M 25	21.5	16	20	**0886730000**
KSPM M32 SSC	M 32	21.5	16	10	**0886740000**
KSPM M40 SSC	M 40	21.5	16	10	**0886750000**
KSPM M50 SSC	M 50	21.5	16	1	**1075510000**
KSPM M63 SSC	M 63	21.5	16	1	**1075520000**
KSPM M75 SSC	M 75	21.5	16	1	**1075530000**
brass					
KSPM M16 BSC	M 16	21.5	16	20	**0887480000**
KSPM M20 BSC	M 20	21.5	16	20	**0885410000**
KSPM M25 BSC	M 25	21.5	16	20	**0885420000**
KSPM M32 BSC	M 32	21.5	16	10	**0885430000**
KSPM M40 BSC	M 40	21.5	16	10	**0885440000**
KSPM M50 BSC	M 50	21.5	16	1	**0885450000**
KSPM M63 BSC	M 63	21.5	16	1	**1075480000**
KSPM M75 BSC	M 75	21.5	16	1	**1075490000**

Note

Sealing plugs - Plastic - Ex e, IP 66

Sealing plugs with accessible hexagon recess, made from glass-fibre-reinforced nylon. They are used to seal unused threaded holes so that cable glands can be connected in the future – also recommended for Ex applications.

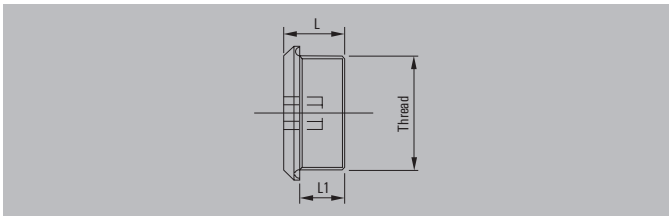

Technical data

Material	Nylon
O-Ring	NBR
Temperature range	-20 °C...40 °C
Protection degree	IP 66
Approval	II 2 GD, Ex e IIC Gb, Ex tb IIIC Db, IP6X

Note

Ordering data

Typ	Thread	L	L1	Qty.	Order No.
metric					
KSPM M16 PL	M 16 / 1.5	21.5	16	20	**1209890000**
KSPM M20 PL	M 20 / 1.5	21.5	16	20	**1209910000**
KSPM M25 PL	M 25 / 1.5	21.5	16	20	**1209920000**
KSPM M32 PL	M 32 / 1.5	21.5	16	10	**1209930000**
KSPM M40 PL	M 40 / 1.5	21.5	16	10	**1209940000**
KSPM M50 PL	M 50 / 1.5	21.5	16	1	**1209950000**

Note

Adaptors with NPT male threads

Adaptors can be used to connect threaded holes and cable glands of different thread sizes and types.

Technical data

Material	Brass, nickel-plated
Temperature range	-40 °C...100 °C
Protection degree	IP 54
Approval	II 2 GD, Ex d IIC, Ex e II, Ex tD

Ordering data

External thread	1/2" NPT	3/4" NPT	1" NPT	1 1/4" NPT	1 1/2" NPT	2" NPT	2 1/2" NPT	3" NPT
Inner thread	Order No.	Order No.	Order No.	Order No.	Order No.	Order No.	Order No.	Order No.
M16	1737490000					1737440000	1737430000	1737420000
M20	1737650000	1737640000	1737630000			1737600000	1737590000	1737580000
M25	1737810000	1737800000	1737790000			1737760000	1737750000	1737740000
M32		1737950000				1737910000	1737900000	1737890000
M40			1738070000			1738040000	1738030000	1738020000
M50						1738150000	1738140000	1738130000
M63						1738240000	1738230000	1738220000
M75						1738310000	1738300000	1738290000
1/2" NPT	1738410000	1738400000	1738390000	1738380000	1738370000	1738360000	1738350000	1738340000
3/4" NPT	1738570000	1738560000	1738550000	1738540000	1738530000	1738520000	1738510000	1738500000
1" NPT			1738700000	1738690000	1738680000	1738670000	1738660000	1738650000
1 1/4" NPT			1738820000	1738810000	1738800000	1738790000	1738780000	1738770000
1 1/2" NPT				1738920000	1738910000	1738900000	1738890000	1738880000
2" NPT						1738990000	1738980000	1738970000
2 1/2" NPT						1739060000	1739050000	1739040000
3" NPT							1739100000	1739090000

Note Qty. = 1

Adaptors with metric male threads

Adaptors can be used to connect threaded holes and cable glands of different thread sizes and types.

Technical data

Material	Brass, nickel-plated
Temperature range	-40 °C...100 °C
Protection degree	IP 54
Approval	II 2 GD, Ex d IIC, Ex e II, Ex tD

Ordering data

External thread	M 16	M 20	M 25	M 32	M 40	M 50	M 63	M 75
Inner thread	Order No.	Order No.	Order No.	Order No.	Order No.	Order No.	Order No.	Order No.
M16		1737560000	1737550000	1737540000	1737530000	1737520000	1737510000	1737500000
M20	1737730000	1737720000	1737710000	1737700000	1737690000	1737680000	1737670000	1737660000
M25		1737880000		1737860000	1737850000	1737840000	1737830000	1737820000
M32			1738010000		1737990000	1737980000	1737970000	1737960000
M40				1738120000	1738110000	1738100000	1738090000	1738080000
M50					1738210000		1738190000	1738180000
M75						1738280000	1738330000	1738260000
1/2" NPT		1738480000		1738460000	1738450000	1738440000	1738430000	1738420000
3/4" NPT		1738640000	1738630000		1738610000	1738600000	1738590000	1738580000
1" NPT			1738760000	1738750000	1738740000	1738730000	1738720000	1738710000
1 1/4" NPT				1738870000		1738850000	1738840000	1738830000
1 1/2" NPT							1738940000	1738930000
2" NPT								1739010000
2 1/2" NPT							1739080000	1739070000
3" NPT								1739110000

Note Qty. = 1

Compensation elements - Plastic - DAE

The DAE pressure-compensation element provides good ventilation for the enclosure and prevents moisture build-up. At the same time it maintains the high IP 69k protection level. The membrane repels water and oil.

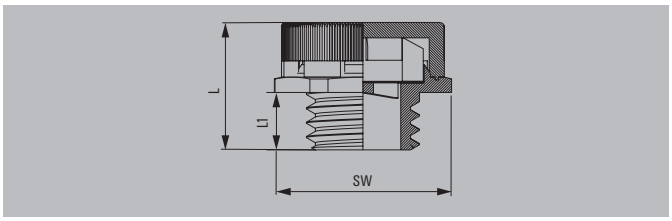

Technical data

Material / Colour	Polyamide 6 / RAL 9005
O-Ring	NBR
Temperature range	-40 °C...105 °C
Protection degree	IP 66, IP 68, IP 69K
Air flow	0.8 l/min at 0.1 bar ΔP, up to 7.6 l/min at 1bar ΔP
Wasser inlet point	> 1.5 bar
UL 94 flammability rating	V-2

Note

Ordering data

Typ	Thread	L	L1	SW	Qty.	Order No.
metric						
DAE M12 PA long	M 12 / 1.5	17.4	10	17	10	**1868570000**
DAE M12 PA short	M 12 / 1.5	13.4	6	17	10	**1868560000**

Note Light grey version - RAL 7035 - on request

Compensation elements - Stainless steel - DAE

The DAE pressure-compensation element provides good ventilation for the enclosure and prevents moisture build-up. At the same time it maintains the high IP 69k protection level. The membrane repels water and oil.

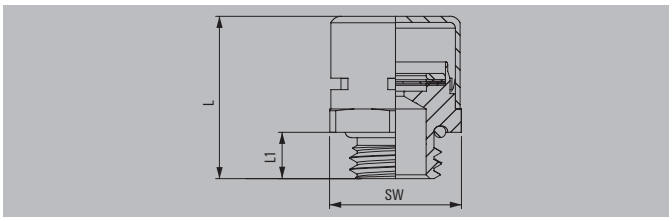

Technical data

Material	Stainless steel
O-Ring	NBR
Temperature range	-40 °C...105 °C
Protection degree	IP 66, IP 68, IP 69K
Air flow	0.8 l/min at 0.1 bar ΔP, up to 7.6 l/min at 1bar ΔP
Wasser inlet point	> 1.5 bar

Note

Ordering data

Typ	Thread	L	L1	SW	Qty.	Order No.
metric						
DAE M12 SS	M 12 / 1.5	21.1	10	17	10	**1868550000**
Note						

Compensation elements - BD 1

The BD1 compensation element can be used for enclosure ventilation and to prevent moisture build-up. It is specially designed for Ex applications.

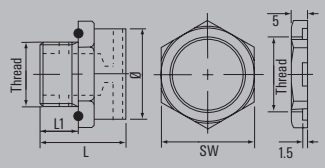

Technical data

O-Ring	NBR
Temperature range	-30 °C...85 °C
Protection degree	IP 66
Filter	HDPE insert
Approval	Ex e II, II 2 GD

Note

Ordering data

Typ	Thread	L	L1	SW	Qty.	Order No.
metric, brass						
BD 1 brass	M 20 / 1.5	25	10	29	1	**3080760000**
metric, stainless steel 1.4404 316L						
BD 1 ss	M 20 / 1.5	25	10	29	1	**3080770000**

Note

Compensation elements - EWS

We recommend using the EWS drainage plug in order to drain moisture out of the enclosure. This component is not suitable for providing ventilation to the enclosure.

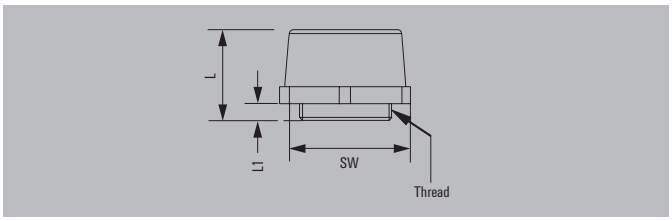

Technical data

Material / Colour	Polyamide / RAL 9005
Temperature range	-20 °C...40 °C
Protection degree	IP 54
Flammability rating	V-2
Approval	Ex e II, II 2 GD

Note	Installed at the lowest point from the bottom in the wall of the enclosure Minimum enclosure wall thickness of 4 mm must be maintained.

Ordering data

Typ	Thread	L	L1	SW	Qty.	Order No.
metric						
EWS M 25X1.5	M 25 / 1.5	23	5	30	20	**1719740000**
Note						

Breather drains – Klippon® BDX

The BDX compensating element is used for ventilating the enclosure and preventing a build up of moisture, particularly in Ex applications.

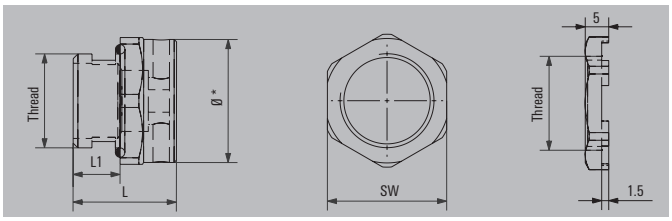

Technical data

Material	Stainless steel 1.4404 (316L) or brass CuZnPb (CZ121)
IP class	IP 66
Impact resistance	20 J
Filter	sintered bronze
Flow rate	0.25 Litres per hour
Sealing ring	silicone O-ring
Temperature range	-60 °C to +200 °C
Plating	natural
Torque	10 Nm

Note
- The breather-drain is only to be fitted on the bottom side of the enclosure, aligned vertically with the thread upwards, and at the lowest point to permit proper drainage.
- Fully assembly instructions are supplied with the breather drain. The instructions must be read prior to installation and adhered to in full.
- The water flow rate has been tested by a water filled empty enclosure (no pressure or heat producing internal components). The water flow rate can slightly differ by influences from operational parameter and environmental conditions.

Ordering data

Type	Material	Thread	L/L1	SW	Diameter Ø*	Order No.
KLIPPON BDX M20 B	brass	M20 x 1.5	22/10	27	26.2	**1292540000**
KLIPPON BDX M20 S	stainless steel	M20 x 1.5	22/10	27	26.2	**1292530000**
KLIPPON BDX M20X15 S	stainless steel	M20 x 1.5	27/15	27	26.2	**1344630000**
Note			Dimensions in mm			

Cable entry system

Cable entry system	Cable entry system	D.2
	Cable grommets	D.3
	Cable entry strips and panels	D.4
	Strain-relief strips	D.9
	Separable cable gland	D.10

Would you prefer to connect a pre-assembled cable to an installation enclosure or cabinet, or install it later, without having to dismantle the plug or cut it from the cable?
If so, you can save time and money by using our modular Cabtite cable entry system. These systems are a combination of splittable cable entry strips or cable glands connected with clamping grommets.

The use of split, captive grommets allows different diameters to be fed into the enclosure whilst simultaneously guaranteeing IP 54 protection and strain relief. Thanks to the fact that they have the same design and dimensions, the modular components and grommets can be used in cable entry strips as well as in cable glands. The system is found particularly in measurement, power, computer lines or field bus systems in the areas of:

- Control engineering
- Switchgear cabinet manufacture
- Motor vehicle manufacture
- Systems engineering
- Mechanical engineering
- Electrical installation

Cabtite KEL SNAP frame

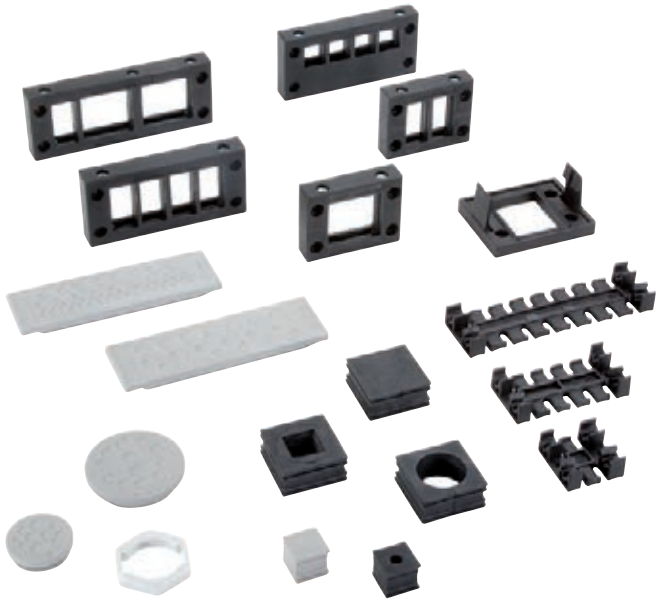

Separable cable gland Cabtite KVT

Cabtite sample set

Get a feel for the Cabtite system with our Cabtite sample set. It contains cable entry frames, snap frames, separable cable glands as well as diverse cable grommets.

Ordering data

Type	Qty.	Order No.
Cabtite Sample Kit	1	1849780000

HDC KT – Cable grommets, small

Cable grommets
for ASI cables

HDC KT – Cable grommets, large

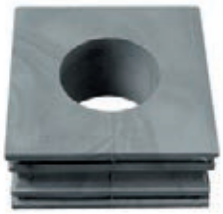

Blanking plugs

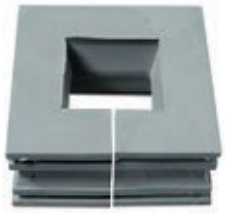

Adapter grommet

Technical data

Material, grey	Elastomers, free from halogens and silicone
Material, black	Elastomers with very high chemical resistance
Temperature range, grey	-40 °C to +90 °C (static)
Temperature range, black	-30 °C to +90 °C (static)
UL 94 flammability rating	V0 grey, HB black

Ordering data

Type	Clamping range [mm]	Qty.	Order No. grey	Order No. black
HDC KT 3	3-4	10	1826460000	1827790000
HDC KT 4	4-5	10	1826470000	1827800000
HDC KT 5	5-6	10	1826480000	1827810000
HDC KT 6	6-7	10	1826490000	1827830000
HDC KT 7	7-8	10	1826500000	1827840000
HDC KT 8	8-9	10	1826510000	1827850000
HDC KT 9	9-10	10	1826520000	1827860000
HDC KT 10	10-11	10	1826530000	1827870000
HDC KT 11	11-12	10	1826540000	1827880000
HDC KT 12	12-13	10	1826550000	1827890000
HDC KT 13	13-14	10	1826560000	1827900000
HDC KT 14	14-15	10	1826570000	1827910000
HDC KT 15	15-16	10	1826580000	1827920000
HDC KTS 16	16-17	10	1826590000	1827930000
HDC KTS 17	17-18	10	1826600000	1827940000
for ASI cables				
HDC KT-ASI		10	1826610000	1828120000
2 or 4 openings				
HDC KT 2/4	2 x 4	10	1826620000	1828130000
HDC KT 2/5	2 x 5	10	1826630000	1828140000
HDC KT 2/6	2 x 6	10	1826640000	1828150000
HDC KT 4/5	4 x 5	10	1826650000	1828160000
Blanking plugs, small				
HDC BTK		10	1828170000	1828200000

Technical data

Material, grey	Elastomers, free from halogens and silicone
Material, black	Elastomers with very high chemical resistance
Temperature range, grey	-40 °C to +90 °C (static)
Temperature range, black	-30 °C to +90 °C (static)
UL 94 flammability rating	V0 grey, HB black

Ordering data

Type	Clamping range [mm]	Qty.	Order No. grey	Order No. black
HDC KT 16	16-17	10	1825950000	1827950000
HDC KT 17	17-18	10	1826300000	1827960000
HDC KT 18	18-19	10	1826310000	1827970000
HDC KT 19	19-20	10	1826320000	1827980000
HDC KT 20	20-21	10	1826330000	1827990000
HDC KT 21	21-22	10	1826340000	1828000000
HDC KT 22	22-23	10	1826350000	1828010000
HDC KT 23	23-24	10	1826360000	1828020000
HDC KT 24	24-25	10	1826370000	1828030000
HDC KT 25	25-26	10	1826380000	1828040000
HDC KT 26	26-27	10	1826390000	1828050000
HDC KT 27	27-28	10	1826400000	1828060000
HDC KT 28	28-29	10	1826410000	1828070000
HDC KT 29	29-30	10	1826420000	1828080000
HDC KT 30	31-32	10	1826430000	1828090000
HDC KT 32	32-33	10	1826440000	1828100000
HDC KT 34	33-34	10	1826450000	1828110000
Adapter grommet, large (for small cable grommets)				
HDC ATG		10	1828190000	1828220000
Blanking plugs, large				
HDC BTG		10	1828180000	1828210000

Cabtite KEL

Cabtite KEL
The rectangular panel cutout frames fit exactly into the standard cutout for heavy-duty connectors. This makes it possible to accommodate up to 40 connectors in a very confined space.

- Feeds through prefabricated wiring in confined spaces.
- Two-piece, two-tier system
- Fast and easy mounting
- Standard panel cutout frames for 16 and 24 pole industrial plug-in connectors
- The predefined gap achieves a minimum class of protection of IP 54
- Large numbers of cables in very confined spaces
- Retrofitting of prefabricated wiring also possible
- The manufacturer's guarantee covering the prefabricated cables remains valid
- Integral strain relief to VDE 0619
- Locknuts ensure that working "overhead" is safe and simple

Cabtite KEL SNAP frame
Snap frame for mounting the cable entry frame in the switchgear cabinet.

- The KEL can be fitted quickly without tools
- The KEL need not be fitted or removed to add or remove individual cables
- The drilling pattern is identical with that of the KEL
- Seals are already integrated on both sides
- Switchgear cabinets can be fitted with KEL SNAP in advance
- KEL Snap is available for KEL 16, KEL 24 and KEL B4.

Cabtite KEL-DP
The Cabtite KEL-DP feed-through plate system offers an affordable alternative to standard cable glands. It is ideal when multiple cables must be connected within an installation enclosure and when IP 54 protection is adequate. Weidmüller offers this system with round and rectangular entry plates. The entry plates are simply pressed into the standard cut-outs. The position of the system is centred by means of integrated spring-loaded pins.

The advantages of this system are clear:

- High packing density
- Affordable
- Simple, tool free installation in seconds
- Very low profile

Operating mode

1. The grommet is fitted around the cable.
   Important:
   Choose an appropriately sized grommet for the diameter of the cable!

2. Press the grommet with the cable into the open cable entry frame..
   Important:
   The flat side of the grommet must face upwards!

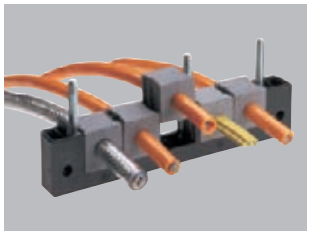

3. Assemble the two halves of the cable entry frame using the M5x50 Allen screws supplied. This achieves integral strain relief in accordance with VDE 0619 (VDE = German Association for Electrical, Electronic and Information Technologies).

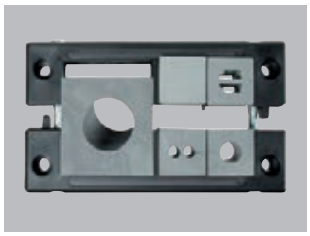

4. Finally, the rubber seal is glued around the cabinet panel cutout and the cable entry frame is secured with 4 screws. The cable entry is now complete, and has a protection class of IP 54!

Advantage: The panel cutout frames are the same as those used for heavy-duty connectors. They are supplied by the switchgear cabinet manufacturers. You do not require a new punching die!

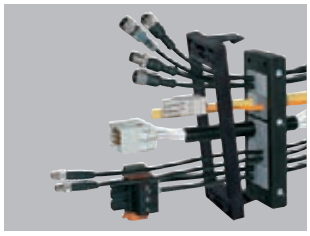

HDC KEL 16

Size equivalent to 16-pole HE inserts

KEL 16/8 with 8 small grommets

KEL 16/4 closed half-shell and
4 small grommets

Snap frame
KEL 16 SNAP

Technical data

Material	Polyamide, free from halogens and silicone
Colour	black
Temperatur range	-40 °C to +140 °C (static)
Class of protection	IP 54, when the correct cable grommet is selected
UL 94 flammability rating	V0

Ordering data

Type	Number of grommet positions		Qty.	Order No.
	small	large		
HDC KEL 16/2	–	2	10	**1825860000**
HDC KEL 16/4	4	– *)	10	**1825900000**
HDC KEL 16/5	4	1	10	**1849770000**
HDC KEL 16/8	8	–	10	**1825910000**
Snap frame				
HDC KEL 16 SNAP			10	**1827770000**

*) with closed half shell

Dimensions

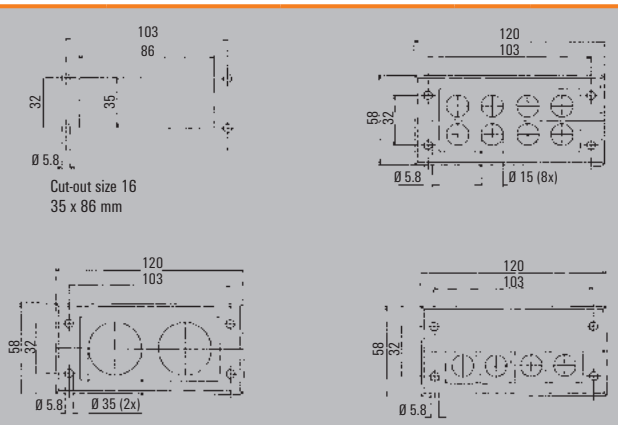

HDC KEL 24

Size equivalent to 24-pole HE inserts

KEL 24/10 with 10 small grommets

KEL 24/7 with 1 large and
6 small grommets

Snap frame
KEL 24 SNAP

Technical data

Material	Polyamide, free from halogens and silicone
Colour	black
Temperatur range	-40 °C to +140 °C (static)
Class of protection	IP 54, when the correct cable grommet is selected
UL 94 flammability rating	V0

Ordering data

Type	Number of grommet positions		Qty.	Order No.
	small	large		
HDC KEL 24/4	2	2	10	**1825930000**
HDC KEL 24/5	5	– *)	10	**1825940000**
HDC KEL 24/7	6	1	10	**1849760000**
HDC KEL 24/10	10	–	10	**1827760000**
Snap frame				
HDC KEL 24 SNAP			10	**1827780000**

*) with closed half shell

Dimensions

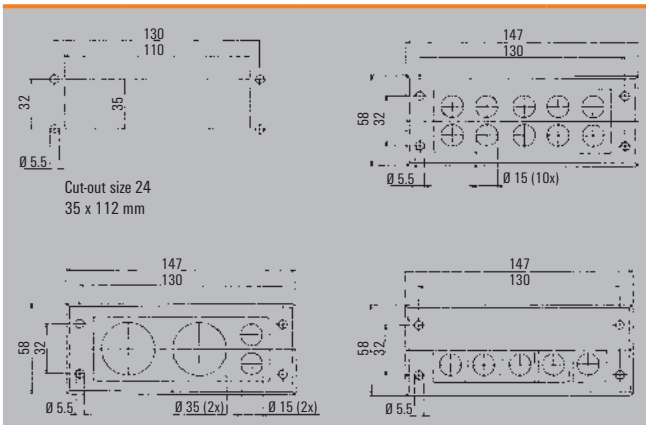

HDC KEL B

KEL B 1 with 1 large grommet

KEL B 4 with 4 small grommets

Snap frame KEL.SNAP B4

Technical data

Material	Polyamide, free from halogens and silicone
Colour	black
Temperatur range	-40 °C to +140 °C (static)
Class of protection	IP 54, when the correct cable grommet is selected
UL 94 flammability rating	V0

Ordering data

Type	Number of grommet positions small	Number of grommet positions large	Qty.	Order No.
HDC KEL-B1	-	1	10	**1048170000**
HDC KEL-B4	4	-	10	**1048180000**
Snap frame				
HDC KEL-SNAP B4			10	**1048190000**

Dimensions

HDC KEL-B1

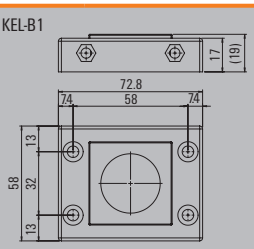

HDC KEL-B4

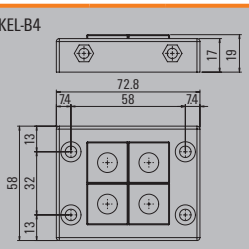

HDC KEL-SNAP B4

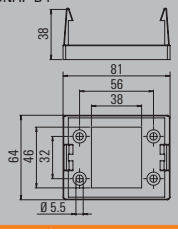

HDC KEL DP - Rectangular version

Rectangular cable entry plates (112 x 36 mm)

CABTITE KEL-DP 24/14

CABTITE KEL-DP 24/17

CABTITE KEL-DP 24/19

CABTITE KEL-DP 24/26

CABTITE KEL-DP 24/48

CABTITE KEL-DP 24/50

HDC KEL DP - Round version

Round cable entry plates

CABTITE KEL-DP 32/10

CABTITE KEL-DP 50/9

CABTITE KEL-DP 50/12

CABTITE KEL-DP 50/16

CABTITE KEL-DP 50/18

CABTITE KEL-DP 50/20

Technical data

Material	Elastomers, free from halogens and silicone
Colour	grey
Temperatur range	-40 °C to +90 °C (static)
Class of protection	IP 64
UL 94 flammability rating	V0

Technical data

Material	Elastomers, free from halogens and silicone
Colour	grey
Temperatur range	-40 °C to +90 °C (static)
Class of protection	IP 65
UL 94 flammability rating	V0

Ordering data

Rectangular version (112 x 36 mm)

Type	Number of lines with maximum diameter (in mm)	Qty.	Order No.
CABTITE KEL-DP 24/14	14 x max. 12.1mm	1	**1039850000**
CABTITE KEL-DP 24/17	12 x max. 12.6 mm 5 x max. 10.5 mm	1	**1039870000**
CABTITE KEL-DP 24/19	7 x max. 12.1 mm 12 x max. 6.5 mm	1	**1039890000**
CABTITE KEL-DP 24/26	2 x ASI cables 16 x max. 6.5 mm 4 x max. 12.1 mm 4 x max. 16.1 mm	1	**1039930000**
CABTITE KEL-DP 24/48	48 x max. 6.5 mm	1	**1039940000**
CABTITE KEL-DP 24/50	33 x max. 5.3 mm 9 x max. 6.4 mm 8 x max. 8.3 mm	1	**1039950000**

Ordering data

Round version

Type	Number of lines with maximum diameter (in mm)	Qty.	Order No. for sheet thickness of 1.5-2.5 mm	Order No. for sheet thickness of 2.8-4.0 mm
CABTITE KEL-DP 32/10	6 x max. 5.2 mm 2 x max. 6.4 mm 2 x max. 9.4 mm	1	**1040120000**	**1040310000**
CABTITE KEL-DP 50/9	5 x max. 7.0 mm 4 x max. 18.0 mm	1	**1040130000**	**1040320000**
CABTITE KEL-DP 50/12	10 x max. 9.2 mm 2 x max. 11.2 mm	1	**1040160000**	**1040330000**
CABTITE KEL-DP 50/16	4 x max. 5.3 mm 5 x max. 6.3 mm 3 x max. 9.5 mm 4 x max. 11.3 mm	1	**1040180000**	**1040350000**
CABTITE KEL-DP 50/18	5 x max. 11.5 mm 5 x max. 9.0 mm 4 x max. 6.5 mm 2 x max. 5.5 mm 2 x max. 4.0 mm	1	**1040210000**	**1040360000**
CABTITE KEL-DP 50/20	16 x max. 6.3 mm 4 x max. 9.3 mm	1	**1040240000**	**1040370000**

Dimensions

Cut-out size KEL-DP 24
112 x 36 mm
1.5 - 4.0 mm sheet thickness

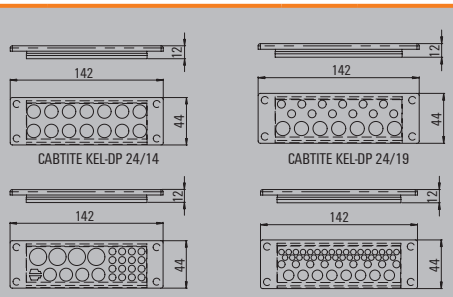

Dimensions

2.8 to 4.0 mm sheet thickness

1.5 to 2.5 mm sheet thickness

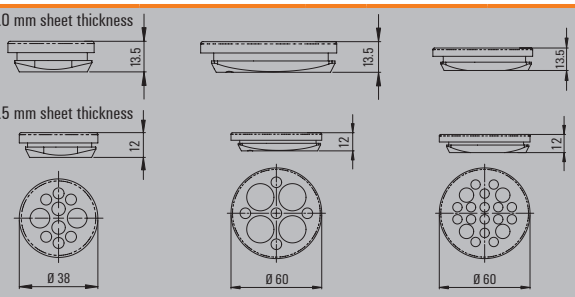

Cable clamping rail Cabtite KEL-EMV

Provides electromagnetic protection for prefabricated cable without interrupting shielding.

Advantages:

- Direct, simple and quick contact with the enclosure
- Two-tier version saves space with up to 10 cables
- Strain relief without cable ties in accordance with VDE 0619
- No EMC cable glands necessary for mains-generated interference sources
- Low-impedance shielding contact
- Seals using outer sheath and not the shield = higher class of protection!
- Trouble-free retrofitting

Technical data

Material	Stainless steel

Ordering data

Type		for	Qty.	Order No.
	HDC KEL EMV 16/4	KEL 16	10	**1825750000**
	HDC KEL EMV 24/5	KEL 24	10	**1825760000**

Strain-relief strips

The Cabtite KZL strain-relief strips are used when routing various types of cables to machines and electrical cabinets. A secure grip is ensured by the undercut on the comb-shaped profile. Cable ties provide strain relief for the cables. Undercuts in the teeth of the KZL prevent the cable tie from slipping out.

HDC KZL

CABTITE KZL 140

CABTITE KZL 80

CABTITE KZL 39

Technical data

Material	Polyamide, free from halogens and silicone
Colour	black
Temperatur range	-40 °C to +140 °C (static)
UL 94 flammability rating	V0

Ordering data

Type	Length	Qty.	Order No. for 35 mm DIN mounting rail	Order No. for C profile rail
CABTITE KZL 39	39 mm	10	1039990000	1040080000
CABTITE KZL 80	80 mm	10	1039970000	1040060000
CABTITE KZL 140	140 mm	10	1039960000	1040030000

Dimensions

CABTITE KZL 39 for 35 mm DIN rail

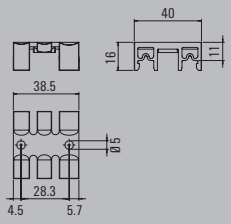

CABTITE KZL 80 for 35 mm DIN rail

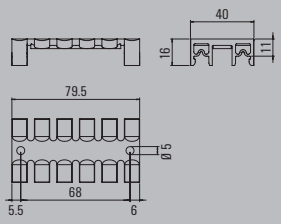

CABTITE KZL 140 for 35 mm DIN rail

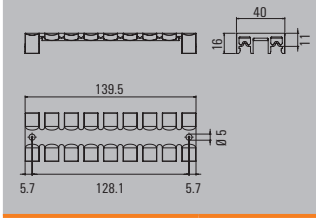

Cabtite KVT

KVTs are used to feed through prefabricated cables when space is tight or only a few cables are required. As is the case with its big brother, the KEL, this product is also a two-piece system for easy assembly using the same cable grommets. The preassembled KVT32 can be used for hole diameters up to 35 mm, the KVT63 for hole diameters up to 65 mm. A sealing ring is also included.

- This two-piece system means that the size of the plug-in connector to be fed through is limited only by the size of the hole diameter.
- Two-piece two-tier system
- Fast and easy mounting
- The predefined gap achieves a minimum class of protection of IP54
- Large numbers of cables in very confined spaces
- Retrofitting of prefabricated wiring also possible
- The manufacturer's guarantee covering the prefabricated cables remains valid
- Integral strain relief to VDE 0619

Operating mode

1. The grommet is fitted around the cable.
   Important:
   Choose an appropriately sized grommet for the diameter of the cable!

2. Press the grommet with the cable into the open cable gland. The flat sides of the grommet must face upwards when fitting the KVT 63/4!

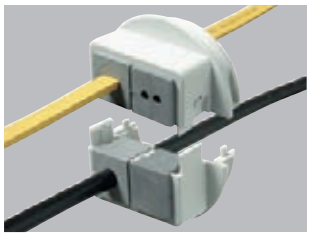

3. Squeeze the two halves of the cable gland together until they lock together with an audible "click".

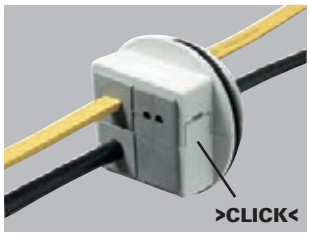

4. Place the seal, which is also supplied, over the thread. Then fit the cable gland into the hole and, if necessary, secure it with a locknut.

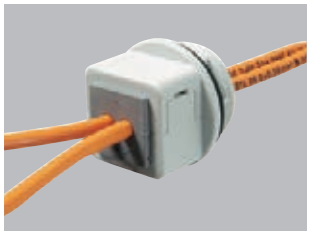

Technical data

Material	Polycarbonate, free from halogens and silicone
Colour	grey, similar to RAL 7035
Temperatur range	IP54, when the correct cable grommet is selected
Class of protection	-30 °C to +100 °C (static)
UL 94 flammability rating	V0

Ordering data

Type		Thread	No. of grommet positions small	large	Qty.	Order No.
	HDC KVT 25	M 25 x 1.5	1	-	10	**1826660000**
	HDC KVT 32	M 32 x 1.5	1	-	10	**1826670000**
	HDC KVT 63-4	M 63 x 1.5	4	-	5	**1828230000**
	HDC KVT 63-1	M 63 x 1.5	-	1	5	**1828240000**
Locknut for D-Sub 9						
	KGM-SUB-D9	M 32 x 1.5	1	-	10	**1828250000**

Note: HDC KVT 63-x types are supplied with a locknut.

Dimensions

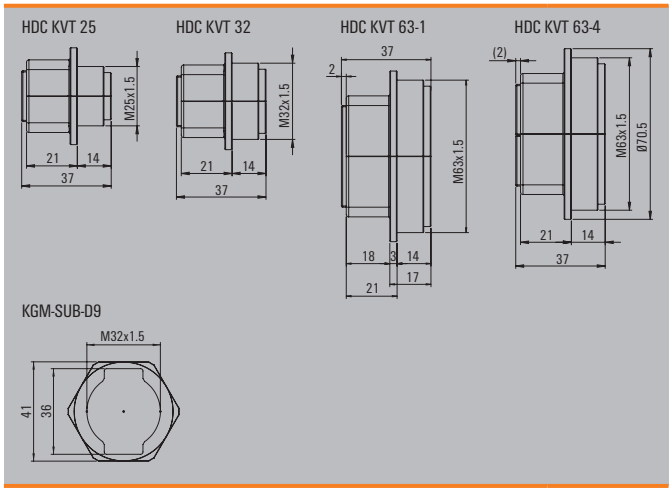

Tools

Tools	Introduction	E.2
	Hole punch	E.4
	Screwdrivers	E.8
	Torque screwdrivers	E.10
	Uninsulated torque screwdriver	E.11
	VDE-insulated torque screwdriver	E.12
	Cable gland tools	E.13
	Screwdrivers	E.14
	VDE-insulated screwdriver	E.15
	Uninsulated screwdriver	E.17
	Weidmüller wrench set	E.19
	Pin and electrical cabinet key	E.22

Tools

Weidmüller´s professional tools are the result of an intensive development process that has been specifically focussed on the requirements of their use in practice. It is only possible to develop the perfect tool if you fully understand the applicat ing their products and tools. At Weidmüller, everything fits together. Weidmüller offers a variety of useful tools that will assist you in working safely and precisely and in the best possible way when processing and working with enclosures. Weidmüller offers a large range of screwdrivers, for example, using the DMS Manual range you can always make sure you reach the correct torque for mounting rails, gland plates or lid screws.

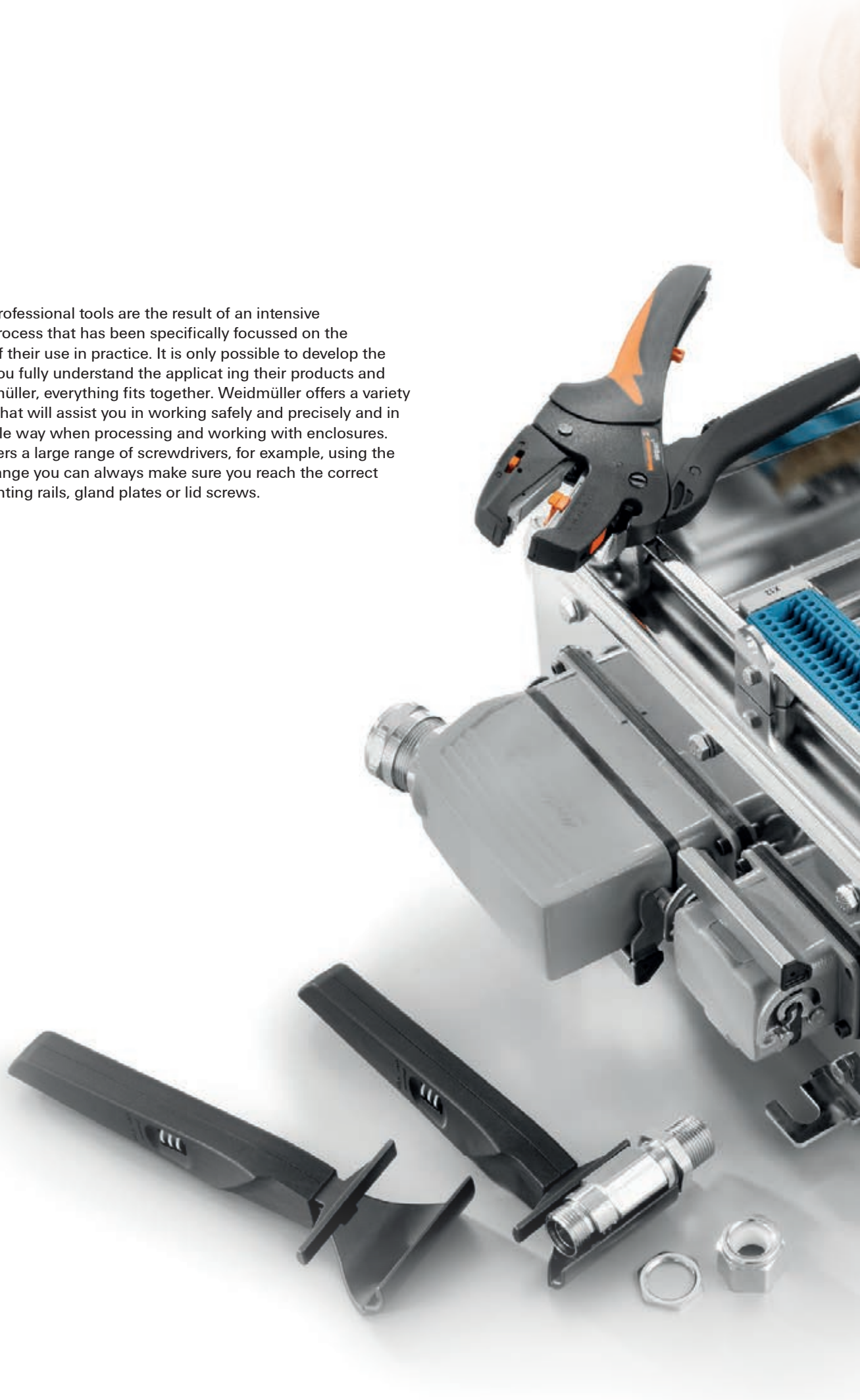

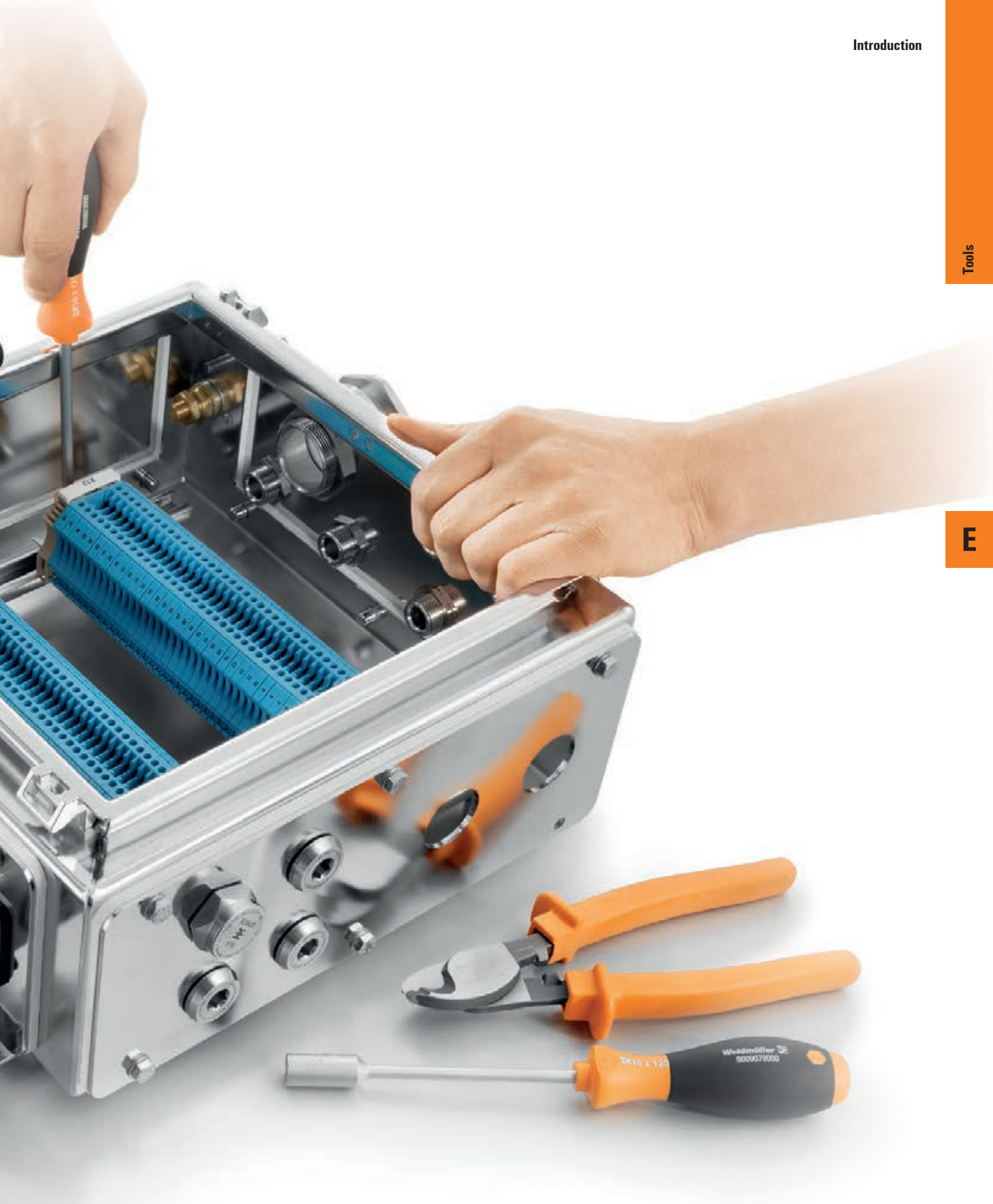
Weidmüller
9000070000

Hydraulic hole puncher

The IP protection classes for enclosures, cable glands, heavy-duty connectors and Industrial Ethernet connectors can only be maintained under two conditions: the sheet metal must not be bent during the punching process and the size of the punched-out holes must correspond precisely with the specifications. The IE-KO-HAT hydraulic sheet metal hole puncher, together with its accessories, guarantees you the highest quality workmanship available. It ensures that the connector fits precisely with the punched-out holes so that you can fulfill the proper IP protection class requirements.

The hydraulic hole puncher punches out precise holes for accommodating metric and PG cable glands.

Automatic centre punching at the drill points when punching out holes for heavy-duty connectors.

Punching out holes for a variety of industrial Ethernet connectors.

The table below lists the round splitting stamps and their corresponding tension screws – for manual use and for use with the hydraulic screws

Typee	Descriptions	Dimension	Order No.	Tension screw Ø x l in mm	Order No.	Hydraulic screw (tension bolt) Ø in mm	Order No.
KOS M 16	Round splitting stamp for M16 cable glands	Ø 16.2 mm	**9204880000**	9.5 x 50	**9205030000**	19 x 9.5	**9205000000**
KOS M 20	Round splitting stamp for M20 cable glands	Ø 20.4 mm	**9204950000**	9.5 x 50	**9205030000**	19 x 9.5	**9205000000**
KOS M 25	Round splitting stamp for M25 cable glands	Ø 25.4 mm	**9204900000**	9.5 x 50	**9205030000**	19 x 9.5	**9205000000**
KOS M 32	Round splitting stamp for M32 cable glands	Ø 32.5 mm	**9204910000**	19.0 x 55	**9205040000**	19	**9205010000**
KOS M 40	Round splitting stamp for M40 cable glands	Ø 40.5 mm	**9204920000**	19.0 x 75	**9204780000**	19	**9205010000**
KOS PG 9	Round splitting stamp for PG9 cable glands	Ø 15.2 mm	**9204930000**	9.5 x 50	**9205030000**	19 x 9.5	**9205000000**
KOS PG 11	Round splitting stamp for PG11 cable glands	Ø 18.6 mm	**9204940000**	9.5 x 50	**9205030000**	19 x 9.5	**9205000000**
KOS PG 13	Round splitting stamp for PG13 cable glands	Ø 20.4 mm	**9204950000**	9.5 x 50	**9205030000**	19 x 9.5	**9205000000**
KOS PG 16	Round splitting stamp for PG16 cable glands	Ø 22.5 mm	**9204960000**	9.5 x 50	**9205030000**	19 x 9.5	**9205000000**
KOS PG 21	Round splitting stamp for PG21 cable glands	Ø 28.3 mm	**9204970000**	9.5 x 50	**9205030000**	19 x 9.5	**9205000000**
KOS PG 29	Round splitting stamp for PG29 cable glands	Ø 37.0 mm	**9204980000**	19.0 x 55	**9205040000**	19	**9205010000**
KOS PG 36	Round splitting stamp for PG36 cable glands	Ø 47.0 mm	**9204990000**	19.0 x 75	**9204780000**	19	**9205010000**

Note: Hydraulic screw included in the IE-KO-HAT set.
Tension screws only used for manual operation.

Hydraulic hole puncher

Incl. accessories:
- 1 hydraulic screw Ø 19 mm
- 1 hydraulic screw Ø 19 x 9.5 mm
- 1 HSS pre-drill Ø 10 mm
- 1 spacer nut set (3-part)
- 1 bridge

IE-KO-HAT

- Overpressure valve protects against overloading
- Cylinder head angled 90°
- Angled head can be rotated through 360°
- Ergonomic handle springs back automatically
- The piece of waste no longer becomes jammed thanks to 3-fold cleaving
- Hydraulic punch manufactured from high-strength aluminium (approx. 40 % less weight)

Technical data

Maximum steel-sheet punching performance		IE-KO-HAT
Round holes from 1 to Ø 85 mm	-	2.0 mm F = 370 N/mm²
Round holes from 2 to Ø 64 mm		3.0 mm F = 370 N/mm²
Square holes up to	-	68 x 68 mm; 2.0 mm F = 370 N/mm²
Rectangular holes up to	-	36 x 112 mm; 2.0 mm F = 370 N/mm²
Maximum stainless steel sheet punching performance		
Round holes from 3 to Ø 64 mm		2.5 mm F = 600 N/mm²
Tool data		
Length x width x height	mm	290 / 120 / 70
Weight	kg	1.9
Punching force	kN	75
Max. operating pressure	bar	650
Note		

Ordering data

Version	Type	Qty.	Order No.
	IE-KO-HAT	1	1966810000
Note			

Accessories

	Type	Qty.	Order No.
	KOHS 19	1	9205010000
	KOHS 9.5+19	1	9205000000
	KOPD 10.0	1	9205020000
Note	Splitting stamp on the next page		

Hole punch

Custom stamp for Industrial Ethernet connections

Type	Description	Dimensions	Qty.	Order No.
IE-KOK-V1	Custom shape for Bajonet 01 metal	Ø 27 mm x 1-sided 25.9 mm	1	1966780000
IE-KOK-V4	Custom shape for Push Pull V04 plastic	Ø 23.2 mm x 2-sided 20.2 mm	1	1966790000
IE-KOK-V5	Custom shape for RockStar® V05 metal	22.0 x 22.0 mm	1	9204790000
IE-KOK-V14	Custom shape for V14 flange	22.0 x 18.5 mm	1	1135240000

Rectangular splitting stamp for heavy-duty connectors

Type	Description	Dimensions	Size	Qty.	Order No.
KOK 52 x 36	Splitting stamp for 6-pole heavy-duty connectors	52.0 x 36 mm	3	1	9204820000
KOK 65 x 36	Splitting stamp for 10-pole heavy-duty connectors	65.0 x 36 mm	4	1	9204830000
KOK 86 x 36	Splitting stamp for 16-pole heavy-duty connectors	86.0 x 36 mm	6	1	9204850000
KOK 91 x 36	Splitting stamp for 16-pole heavy-duty connectors	91.0 x 36 mm		1	9204860000
KOK 112 x 36	Splitting stamp for 24-pole heavy-duty connectors	112.0 x 36 mm	8	1	9204870000

Rectangular splitting stamp for switches

Type	Description	Dimensions	Qty.	Order No.
KOK 46 x 46	Rectangular splitting stamp for switches	46.0 x 46.0 mm	1	9204810000
KOK 68 x 68	Rectangular splitting stamp for switches	68.0 x 68.0 mm	1	9204840000

Round splitting stamp for metric cable glands

Type	Description	Dimensions	Qty.	Order No.
KOS M 16	Round splitting stamp for M16 cable glands	Ø 16.2 mm	1	9204880000
KOS M 20	Round splitting stamp for M20 cable glands	Ø 20.4 mm	1	9204950000
KOS M 25	Round splitting stamp for M25 cable glands	Ø 25.4 mm	1	9204900000
KOS M 32	Round splitting stamp for M32 cable glands	Ø 32.5 mm	1	9204910000
KOS M 40	Round splitting stamp for M40 cable glands	Ø 40.5 mm	1	9204920000

Round splitting stamp for high-strength cable glands

Type	Description	Dimensions	Qty.	Order No.
KOS PG 9	Round splitting stamp for PG9 Cable glands	Ø 15.2 mm	1	9204930000
KOS PG 11	Round splitting stamp for PG11 Cable glands	Ø 18.6 mm	1	9204940000
KOS PG 13	Round splitting stamp for PG13 Cable glands	Ø 20.4 mm	1	9204950000
KOS PG 16	Round splitting stamp for PG16 Cable glands	Ø 22.5 mm	1	9204960000
KOS PG 21	Round splitting stamp for PG21 Cable glands	Ø 28.3 mm	1	9204970000
KOS PG 29	Round splitting stamp for PG29 Cable glands	Ø 37.0 mm	1	9204980000
KOS PG 36	Round splitting stamp for PG36 Cable glands	Ø 47.0 mm	1	9204990000

Tension screw

Type	Description	Dimensions	Qty.	Order No.
KOBBS	Tension screw	9.5 x 50 mm	1	9205030000
KOBBS	Tension screw	19 x 55 mm	1	9205040000
KOBBS	Tension screw	19 x 75 mm	1	9204780000

Screwdrivers

Precisely the proper torque! It's indispensable when you require your work to be precise, effective and repeatable: for example when screwing in sensitive or expensive components, during assembly, final testing, or during quality inspection. This is the ideal job for Weidmüller's manual torque screwdriver with its ergonomic grip and its unique interchangeable bit system.

The Weidmüller screwdriver assortment is the perfect solution; it features the ergonomic design and versatility required for demanding professional applications. Weidmüller safeguards your safety, health, comfort and efficiency with our ergonomic design.

In order to establish secure manual screw connections, all Weidmüller screwdrivers and manual torque screwdrivers feature an advanced geometry, slip protection and a special SoftFinish® area. These qualities enable optimal handling and ensure electrical safety and hand protection even when working on the most critical and potentially dangerous applications.

Weidmüller offers a wide variety of electric screwdrivers, standard bits and innovative quick-change holders – the perfect additions to the manual torque screwdriver. They are the ideal tool for achieving a high level of repetitive accuracy, which is made possible through their ergonomic design and integrated automatic torque control which comes as standard.

Weidmüller also offers innovative solutions for special applications such as cable glands or the fastening of sensor cables.

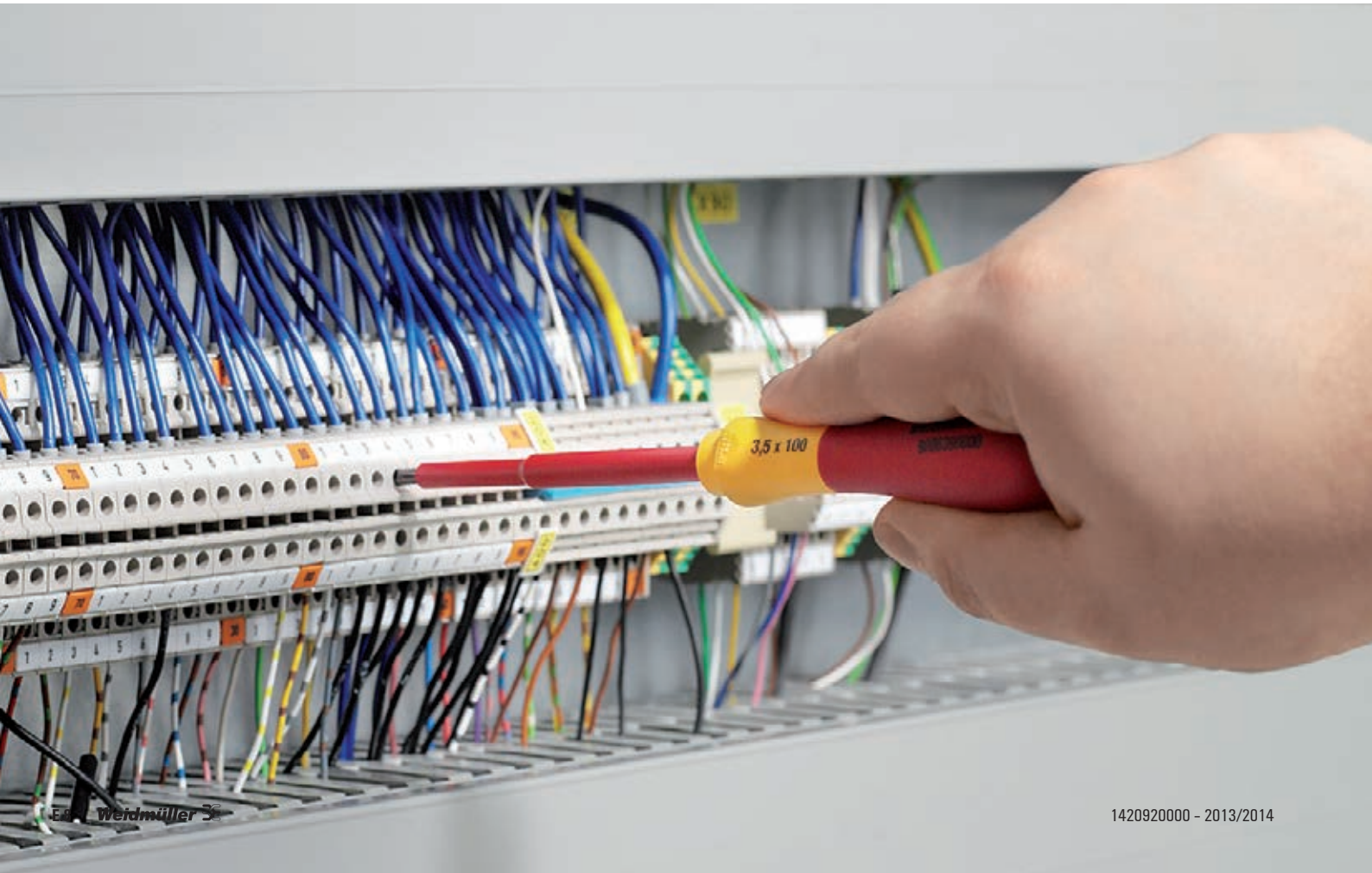

DMS manual / DMSI manual

Torque screwdrivers with insulation up to 1,000 V (VDE) DMSI manual

The „ DMSI manual“ with an integral window scale, combined with a Weidmüller 1,000 V insulated (VDE) interchangeable blade, ensures controlled tightening of screws and maximum reliability in electrical applications.

Every 1,000 V insulated (VDE) handle and blade is tested and provides the necessary safety up to 1,000 V AC / 1,500 V DC.

Torque screwdrivers DMS manual

This is a versatile tool suitable for a variety of jobs, with an integral scale for easy reading of the torque value and a Weidmüller interchangeable blade.

Scale

Each model is available with two torque ranges:
- 0.5 to 1.7 Nm
- 2.0 to 8.0 Nm
- setting tool included

Setting tool

Advantages:
- Compact and especially lightweight design
- Torque set with special tool (included) to ensure the right setting
- Ergonomic handle size to match the torque range
- Every tool checked and given an ID No., 100 % quality control with verification and product reference
- Audible, unmistakable click upon reaching the torque, no unnecessary effort
- Interchangeable blade made from high-quality wear-resistant tool steel
- All tools comply with the accuracy stipulations of: EN ISO 6798, BS EN 26789, ASME B107.14M
- Operating accuracy: ±6 % of set scale value

Uninsulated torque screwdriver

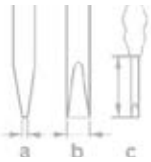

DMS manual

Torque screwdriver
EN ISO 6798, BS EN 26789, ASME B107.14M

Type	Size / AF	a	b	c	Order No.
DMS MANUELL 0,5-1,7	0.5 - 1.7 Nm				9918370000
DMS MANUELL 2,0-8,0	2.0 - 8.0 Nm				9918380000

WK K S

Interchangeable bits for torque screwdriver
output acc. to DIN 5264, ISO 2380/1

WK S 0,4x2,5	max. 0.4 Nm	0.4	2.5	175	9918520000
WK S 0,5x3,0	max. 0.6 Nm	0.5	3	175	9918530000
WK S 0,6x3,5	max. 1.1 Nm	0.6	3.5	175	9918540000
WK S 0,8x4,0	max. 2.5 Nm	0.8	4	175	9918550000
WK S 1,0x5,5	max. 3.8 Nm	1	5.5	175	9918560000

WK K PZ

Interchangeable bits for torque screwdriver
output acc. to DIN 5260-PZ, ISO 8764/1-PZ

WK K PZ0	max. 0.9 Nm			175	9918600000
WK K PZ1	max. 3.8 Nm			175	9918610000
WK K PZ2	max. 5.5 Nm			175	9918620000

WK K PH

Interchangeable bits for torque screwdriver
output acc. to DIN 5260-PH, ISO 8764/1-PH

WK K PH0	max. 0.9 Nm			175	9918570000
WK K PH1	max. 3.8 Nm			175	9918580000
WK K PH2	max. 5.5 Nm			175	9918590000

WGK 1/4 C6.3 E6.3

Interchangeable bit with bit holder for torque screwdrivers
Drive: 1/4" C6.3 and 1/4" E6.3

WK 1/4" C6,3 E6,3					9202510000

VDE-insulated torque screwdriver

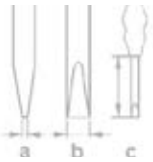

DMSI manual

VDE-insulated torque screwdriver
EN ISO 6798, BS EN 26789, ASME B107.14M

Type	Size / AF	a	b	c	Order No.
DMSI MANUELL 0,5-1,7	0.5 - 1.7 Nm				9918390000
DMSI MANUELL 2,0-8,0	2.0 - 8.0 Nm				9918400000

WK SI

VDE-insulated interchangeable bits for VDE-insulated torque screwdriver; output acc. to DIN 5264, ISO 2380/1

WK SI 0,4x2,5	max. 0.4 Nm	0.4	2.5	200	9918410000
WK SI 0,5x3,0	max. 0.6 Nm	0.5	3	200	9918420000
WK SI 0,6x3,5	max. 1.1 Nm	0.6	3.5	200	9918430000
WK SI 0,8x4,0	max. 2.5 Nm	0.8	4	200	9918440000
WK SI 1,0x5,5	max. 3.8 Nm	1	5.5	200	9918450000

WK IK PH

VDE-insulated interchangeable bits for VDE-insulated torque screwdriver; output acc. to DIN 5260-PH, ISO 8764/1-PH

WK IK PH0	max. 0.9 Nm	200	9918460000
WK IK PH1	max. 3.8 Nm	200	9918470000
WK IK PH2	max. 5.5 Nm	200	9918480000

WK IK PZ

VDE-insulated interchangeable bits for VDE-insulated torque screwdriver; output acc. to DIN 5260-PZ, ISO 8764/1-PZ

WK IK PZ0	max. 0.9 Nm	200	9918490000
WK IK PZ1	max. 3.8 Nm	200	9918500000
WK IK PZ2	max. 5.5 Nm	200	9918510000

WK IK SL/PH

VDE-insulated interchangeable bits for VDE-insulated torque screwdriver

WK IK SL/PH1	1318130000
WK IK SL/PH2	1318140000

Cable gland tools

Screwing tool for all types of cable glands.

- Can tighten or loosen several rows of cable glands
- No deforming of the cable glands

FleCaFix 11/24

Cable gland tool

- Spanner size: 11 to 24 AF
- Infinite adjustment of spanner size
- Ratchet function: not necessary to remove tool between turns
- Authentic one-hand tool

FleCaFix 24/36

Cable gland tool

- Spanner size: 24 to 36 AF
- Infinite adjustment of spanner size
- Ratchet function: not necessary to remove tool between turns
- Authentic one-hand tool

Technical data

Tool data			
Length / Width / Height	mm	190 / 30 / 60	204 / 30 / 60
Weight	g	190	240
AF size	-	11...24 mm	24...36 mm
Note			

Ordering data

Version	Type	Qty.	Order No.	Type	Qty.	Order No.
	FLECAFIX 11/24	1	**9015900000**	FLECAFIX 24/36	1	**9015980000**
Note						

Screwdrivers

Weidmüller screwdrivers come in four different grip sizes, and are the result of a consistent grip concept which takes into account both the human hand and the different work requirements and conditions.

- Perfect handling with all grip sizes
- Maximum torques
- Optimum transmission of axial force
- Complete range including all commercial sizes

SoftFinish® grip

Weidmüller's SoftFinish® grip zone for use in dry conditions and for general applications offers customers a complete range of screwdrivers that enables far higher torques as well as substantially more comfort due to the soft material of the grip.

Product benefits:

- Made of an especially soft material, which is kind to the skin, the SoftFinish® zone enables maximum torques
- Perfect ergonomic grip design for comfortable screw driving and optimum handling
- You can choose from long-life extremely stressable blades in standard sizes
- ChromTop blade tip offers maximum corrosion protection and greatest possible dimensional accuracy of the blade geometry in the screw head over many years

SoftFinish® electric

VDE-insulated screwdriver according to DIN EN 60900, IEC 900 for work on live equipment

Product benefits:

- The protective insulation moulded directly on the screwdriver blade ensures electrical safety, even in critical applications
- Safe for working at up to 1,500 volts DC and 1,000 volts AC
- Each screwdriver is individually tested in a water bath at 10,000 volts according to DIN EN 60900
- Perfect ergonomic grip design for comfortable screw driving and optimum handling
- Made of special soft material which is kind to the skin, the SoftFinish® zone prevents slipping in critical situations and at the same time enables maximum torques

VDE-insulated screwdriver

VDE-insulated screwdriver, for working on live parts up to 1.000 V AC and 1.500 V DC.
DIN EN 60900, IEC 900,
Each piece „GS Safety" tested. Bit made from fully hardened, high-alloy chromiumvanadium-molybdenum steel, gun-metal finish.

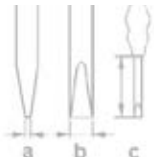

SDI S

VDE insulated slot-head screwdriver, SDI DIN 7437, ISO 2380/2, drive output acc. to DIN 5264, ISO 2380/1. SoftFinish® grip

Type	Blade type	Size / AF	a	b	c	Order No.
SDIS 0.4X2.0X60	A		0.4	2	60	9205690000
SDIS 0.4X2.5X75	A		0.4	2.5	75	9008370000
SDIS 0.5X3.0X100	B		0.5	3	100	9008380000
SDIS 0.6X3.5X100	B		0.6	3.5	100	9008390000
SDIS 0.8X4.0X100	B		0.8	4	100	9008400000
SDIS 1.0X4.5X125	B		1	4.5	125	9008910000
SDIS 1.0X4.5X175	B		1	4.5	175	9205700000
SDIS 1.0X5.5X125	B		1	5.5	125	9008410000
SDIS 1.0X5.5X175	B		1	5.5	175	9205710000
SDIS 1.2X6.5X150	B		1.2	6.5	150	9008420000
SDIS 1.6X8.0X175	B		1.6	8	175	9008430000

SDIK PH

VDE-insulated crosshead screwdriver Pozidrive type, SDIK PZ DIN 7438, ISO 8764/2-PZ, output acc. to ISO 8764-PZ, SoftFinish® grip

SDIK PH0		0.00			60	9008560000
SDIK PH1		1.00			80	9008570000
SDIK PH2		2.00			100	9008580000
SDIK PH3		3.00			150	9008590000

SDIK PZ

VDE-insulated crosshead screwdriver Pozidrive type, SDIK PZ DIN 7438, ISO 8764/2-PZ, output acc. to ISO 8764-PZ, SoftFinish® grip

SDIK PZ1		1.00			80	9008900000
SDIK PZ2		2.00			100	9008890000

SDI SL / PH

VDE-insulated plus-minus screwdriver, Phillips, SDI SL/PH SoftFinish® handle

SDI SL/PH 1		size PH1				1318330000
SDI SL/PH 2		size PH2				1318340000

SDIZ

VDE insulated slot-head screwdriver, SDI DIN 7437, ISO 2380/2, drive output acc. to DIN 5264, ISO 2380/1. SoftFinish® grip

SDIZ 0.6X3.5X100			0.6	3.5	100	9008450000
SDIZ 0.8X4.0X100			0.8	4	100	9008460000
SDIZ 0,8X5,5 150/248			0.8	5.5	150	9008640000

VDE-insulated screwdriver

VDE-insulated screwdrivers, for working on live parts up to 1.000 V AC and 1.500 V DC, DIN EN 60900, IEC 900. Each piece „GS Safety" tested. Blade made from throughhardened, high-alloy chromium-vanadium-molybdenum steel, gun-metal black-oxide finish.

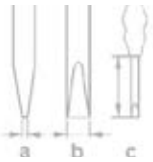

SDIS 2.5-5.5/PH/1/2

6-part set: VDE insulated slotted and crosshead PH screwdriver set

Type	Blade type	Size / AF	a	b	c	Order No.
SDIS 0.4X2.5X75	A		0.4	2.5	75	
SDIS 0.5X3.0X100	B		0.5	3	100	
SDIS 0.8X4.0X100	B		0.8	4	100	
SDIS 1.0X5.5X125	B		1	5.5	125	
SDIK PH1		1.00			80	
SDIK PH2		2.00			100	
SDI Set S2.5-5.5/PH1/2						**9009730000**

SDIS 2.5-5.5/PZ/1/2

SDIS 0.4X2.5X75	A		0.4	2.5	75	
SDIS 0.5X3.0X100	B		0.5	3	100	
SDIS 0.8X4.0X100	B		0.8	4	100	
SDIS 1.0X5.5X125	B		1	5.5	125	
SDIK PZ1		1.00			80	
SDIK PZ2		2.00			100	
SDI Set S2.5-5.5/PZ1/2					1	**1128540000**

SDIS 2.0-5.5

6-part set: VDE-insulated slotted screwdriver set

SDIS 0.4X2.0X60	A		0.4	2	60	
SDIS 0.4X2.5X75	A		0.4	2.5	75	
SDIS 0.5X3.0X100	B		0.5	3	100	
SDIS 0.6X3.5X100	B		0.6	3.5	100	
SDIS 0.8X4.0X100	B		0.8	4	100	
SDIS 1.0X5.5X125	B		1	5.5	125	
SDI Set S2.0-5.5					1	**9205550000**

Uninsulated screwdriver

Weidmüller SoftFinish® screwdriver for general applications.
Blade made from through-hardened, high-alloy chromium-vanadium-molybdenum steel, matt chrome-plated.

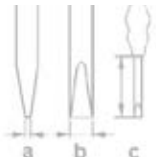

SD S

Slotted screwdriver with rounded blade SD DIN 5265, ISO 2380/2, output to DIN 5264, ISO 2380/1. ChromTop tip, SoftFinish® grip

Type	Blade type	Size / AF	a	b	c	Order No.
SDS 0.4X2.0X60	B		0.4	2	60	9037160000
SDS 0.4X2.5X75	A		0.4	2.5	75	9009030000
SDS 0.5X3.0X80	A		0.5	3	80	9008320000
SDS 0.6X3.5X100	A		0.6	3.5	100	9008330000
SDS 0.6X3.5X200	A		0.6	3.5	200	9010110000
SDS 0.8X4.0X100	A		0.8	4	100	9008340000
SDS 0.8X4.0X125	A		0.8	4.5	125	9009020000
SDS 1.0X5.5X150	A		1	5.5	150	9008350000
SDS 1.2X6.5X150	A		1.2	6.5	150	9009010000

SDK PH

Crosshead screwdriver, Phillips, SDK PH DIN 5262, ISO 8764/2-PH, ouput to ISO 8764-PH, ChromTop tip, SoftFinish® grip

SDK PH0		0.00			60	9008470000
SDK PH1		1.00			80	9008480000
SDK PH2		2.00			100	9008490000
SDK PH3		3.00			150	9008500000

SDK PZ

Crosshead screwdriver, Pozidriv, SDK PZ DIN 5262, ISO 8764/2-PZ, ouput to ISO 8764/1-PZ, ChromTop tip, SoftFinish® grip

SDK PZ1		1.00			80	9008530000
SDK PZ2		2.00			100	9008540000
SDK PZ3		3.00			150	9008550000

SD TH

Torx® TH screwdriver with hole in tip of blade (tamper-resistant), SD TH for screwing Torx® and Torx®-TH security screws (pin in centre of Torx® recess), ChromTop tip, SoftFinish® grip

SD TH10			10		80	9009180000
SD TH15			15		80	9009170000
SD TH20			20		100	9009160000

SK

Hexagon socket wrench SK DIN 3125, ouput to DIN 3125, SoftFinish® grip

SK 10,0x125						9009070000

Uninsulated screwdriver

Weidmüller SoftFinish® screwdriver for general applications.
Blade made from through-hardened, high-alloy chromium-vanadium-molybdenum steel, matt chrome-plated.

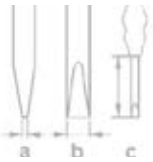

Set S 2.5/3.0/4.0/5.5/PH 1/2

6-part set: slotted and crosshead PH screwdriver set with circular blades

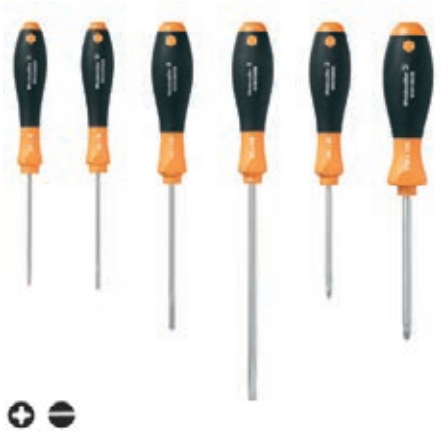

Type	Blade type	Size / AF	a	b	c	Order No.
SDS 0.4X2.5X75	A		0.4	2.5	75	
SDS 0.5X3.0X80	A		0.5	3	80	
SDS 0.8X4.0X100	A		0.8	4	100	
SDS 1.0X5.5X150	A		1	5.5	150	
SDK PH1		1.00			80	
SDK PH2		2.00			100	
SD Set S2.5-5.5/PH1/2						**9009740000**

Set S 2.0/2.5/3.0/3.5/4.0/5.5

6-part set: slotted screwdriver set

SDS 0.4X2.0X60	B		0.4	2	60	
SDS 0.4X2.5X75	A		0.4	2.5	75	
SDS 0.5X3.0X80	A		0.5	3	80	
SDS 0.6X3.5X100	A		0.6	3.5	100	
SDS 0.8X4.0X100	A		0.8	4	100	
SDS 1.0X5.5X150	A		1	5.5	150	
SD Set S2.0-5.5					1	**9205560000**

SD TO 0,6x3,0

Angled slotted screwdriver with round handle, SoftFinish® handle

SD TO 0,6X3,0	A		0.6	3	70	**1323880000**

Weidmüller wrench set

Socket wrench manufactured from through-hardened chromium-vanadium steel, manufactured according to DIN ISO 2936 L (DIN 911), high-quality finished surface.

Type	Size / AF	a	b	c	Order No.
SK WSD S					
	1.5				
	2				
	2.5				
	3				
	4				
	5				
	6				
	8				
	10				
SK WSD-S 1,5-10,0					9008850000
SK S					
SKS 2,0-8,0					9008860000
SK S MR					
SKS 2,0-8,0 MR					9008870000
TH S					
TH-S 9-40					9008880000

SK WSD S

9-piece offset screwdriver set in the Prostar, with MagicRing:
tightly holds standard screws in any position thanks to its spring steel ring (up to size 3), with ball head for screwing up to an angle of 25°.

SK S

7-piece Allen key set

SK S MR

7-piece Allen key set with ball head and MagicRing: holds standard screws (size 3 and larger) in any position thanks to its spring steel ring, with ball head for screwing up to an angle of 25°.

TH S

8-piece Torx®-TH socket wrench set with hole in the bit tip (tamper-resistant), for screwing Torx® and Torx®-TH safety screws (centre pin in the profile)

Weidmüller wrench set

Weidmüller SoftFinish® screwdriver for general applications.
Blade made from through-hardened, high-alloy chromium-vanadium-molybdenum steel, matt chrome-plated.

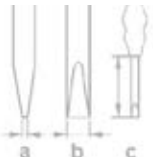

System 11+1 S-PH-PZ-SK

12-piece set with interchangeable bits for slotted, cross-head PH/PZ and hexagon head screws, SoftFinish® handle

Type	Size / AF	a	b	c	Order No.
SD					
SD					
SD					
SD					
PH 1					
PH 2					
PZ 1					
PZ 2					
SK					
SK					
SK					
SYSTEM 11+1				140	**9009750000**

IS 4 / IS 6 / IS 8

Wrench with pegged pilot tip

Hexagon screwdriver with cross-grip made from highquality plastic

- Nickel-plated surface
- Made from hardened chromium-vanadium steel
- Manufactured according to DIN 6911
- Designed for screws acc. to DIN 6912

Technical data

	IS4	IS6	IS8
c	60 mm	80 mm	90 mm
Weight	27 g	61 g	89 g

Ordering data

Type	Qty.	Order No.
IS 4 DIN 6911	1	0485100000
IS 6 DIN 6911	1	0407900000
IS 8 DIN 6911	1	0235000000

IS 2 KG / IS 3 KG / IS 4 KG

Socket wrench

Hexagon screwdriver with cross-grip made from highquality plastic

- Nickel-plated surface
- Made from hardened chromium-vanadium steel
- Manufactured according to DIN 6911
- Designed for screws acc. to DIN 6912

Technical data

	IS 2 KG	IS 3 KG	IS 4 KG
c	100 mm	100 mm	100 mm
Weight	32 g	32 g	32 g

Ordering data

Type	Qty.	Order No.
IS 2 KG	1	1806630000
IS 3 KG	1	1806650000
IS 4 KG	1	1806660000

SDQ T15 / SDQ T20 / SDQ T40

Socket wrench, Torx®

Torx® screwdriver with cross-grip made from high-quality plastic

- Matt-chrome surface finish
- Made from hardened chromium-vanadium steel

Technical data

	SDQ T15	SDQ T20	SDQ T40
c	100 mm	100 mm	100 mm
Weight	32 g	32 g	32 g

Ordering data

Type	Qty.	Order No.
SDQ T15	1	1318390000
SDQ T20	1	1318400000
SDQ T40	1	1318410000

Cross-Key Master

Universal key

1.0 x 7 mm PH 2

5 mm
7 mm 12 mm
9 mm 13.5 mm
8 mm 13.5 mm
4 mm 10 mm

- With bit holder and reversible bit (drives - refer to symbols)
- Material: diecast zinc
- Dimensions: 62 x 90 mm

Application: For almost all technical locking systems in buildings including: doors, window handles, radiator bleed valves, sanitary installations, HVAC, gas and water supply

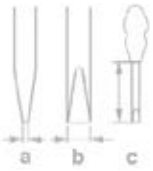

Technical data

Ordering data

Type	Qty.	Order No.
CROSS-KEY MASTER	1	9918150000

Cross-Key Universal

Universal electrical cabinet key

1.0 x 7 mm PH 2

5 mm
6 mm 11.5 mm
9 mm 13.5 mm
7-8 mm 13.5 mm
3-5 mm 9 mm

- With bit holder and reversible bit (drives - refer to symbols)
- Material: diecast zinc
- Dimensions: 72 x 72 mm

Application: For locking systems used in electrical engineering, fits all standard electrical cabinet locks.

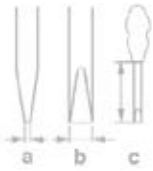

Technical data

Ordering data

Type	Qty.	Order No.
CROSS-KEY UNIVERSAL	1	9918130000

Cross-Key Universal S

Universal mini electrical cabinet key

1.0 x 7 mm PH 2

6 mm 11.5 mm
9 mm 13.5 mm
8 mm 13.5 mm
5 mm 9 mm

- With bit holder and reversible bit (drives - refer to symbols)
- Material: diecast zinc
- Dimensions: 42 x 42 mm

Application: For locking systems used in electrical engineering, fits all standard electrical cabinet locks.

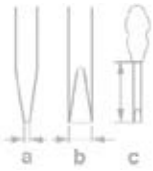

Technical data

Ordering data

Type	Qty.	Order No.
CROSS-KEY UNIVERSAL S	1	9918140000

Weidmüller Solutions & Services

Weidmüller Solutions & Service	Customer specific solutions: best advice, best solutions	V.2
	Digital support: RailDesigner®, Product Assistant for Distribution Boxes, Online product catalogue, M-Print® PRO label designer	V.8

Application specific solutions – Your requirements are our motivation

Each industry has its own requirements calling for more and more individual solutions aside from standard products. Your new product might have to contend with severe conditions. Many applications are subjected to high mechanical strains – through vibration or directly applied forces. Extreme temperature conditions or an application in hazardous areas are further factors your product must be able to comply with. We can offer you highly competent expertise to support you in the selection of ideal products, whatever your application. Feel free to contact us!

From custom product development, customer-specific assembly or application-specific products that are ready for use - we can help you to optimise your working processes and ensure your company's sustained efficiency, today, as well as for the future.

Individual product development
Working closely with you, we can develop individual and future-proof products using the latest technologies and which are specifically tailored to your application.

Customer-specific assembly
Our highly-skilled production expertise and broad product portfolio means that we can deliver superior solutions to meet and exceed your specification requirements.

Application-specific products
Our cross-industrial solutions set standards: Set up for your application, instantly ready for use and available from stock.

Individual product development for your success

We have a passion for simple, innovative solutions
Working with you, we can develop innovative and future-oriented products tailored to your application.
Our philosophy is "one customer - one product". It is not the product that is the starting point, but you, your technical specifications and your requirements.

A connecting partnership
The development of individual products means making the most of the experience and competencies available in the partnership. Our project management provides a professional and quality approach - from concept and design through to development, implementation and production.
Our extensive knowledge of electrical connectivity, enclosure and sealing technology, as well as signal conditioning are all at your disposal.

Benefit from a reliable partner:

- **Increase the efficiency of your development and production processes**
  Outsourcing the development and production of your components will shorten your time-to-market. In addition, you have more time to concentrate on your core competencies.
- **Take advantage of our applications and production expeience and expertise**
  You can draw on the accumulated knowledge of our applications engineers and our specialists in the fields of connection technology, enclosure and surface technology, as well as metal and plastic processing, which is second to none.
- **Feel safe with the professional approach of our project management**
  Through innovation workshops, feasability studies and profitability analyses we define a requirement profile forming the basis for the further development process.
  In this way, you can be sure of the best possible products for your needs.

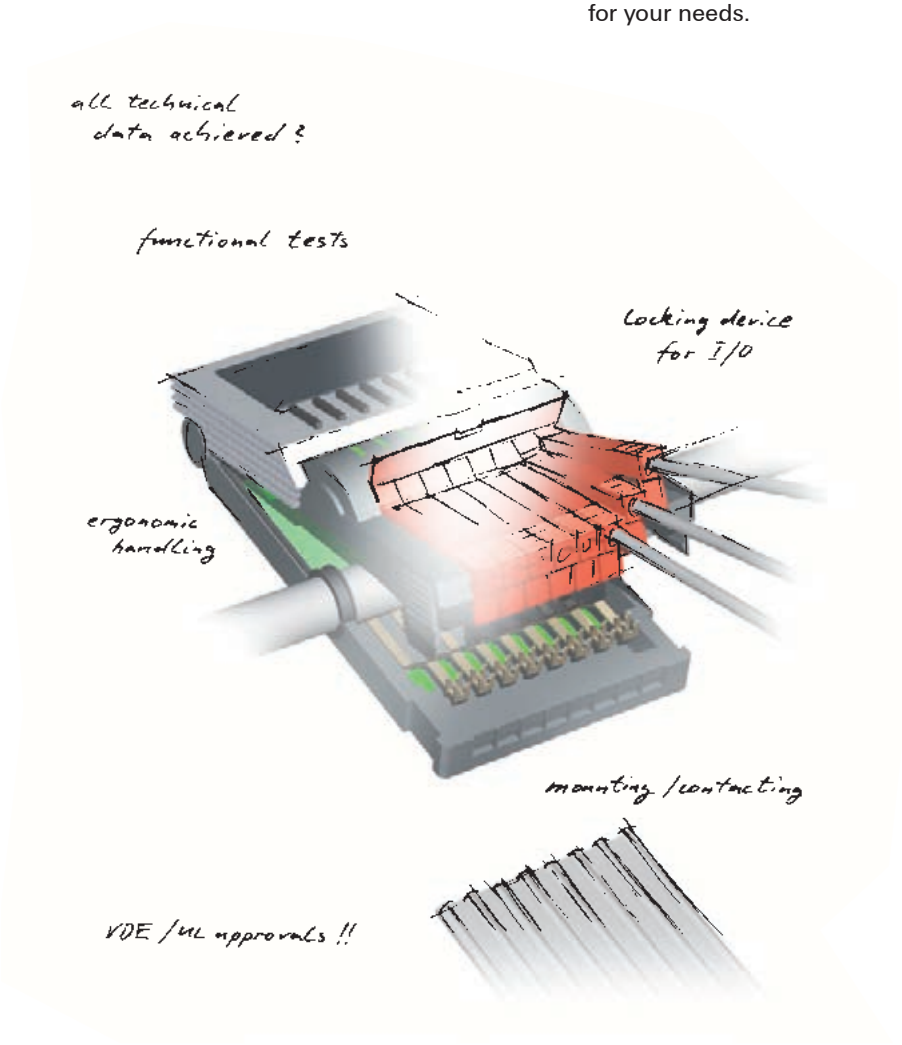

Application specific products – solutions for industries and markets

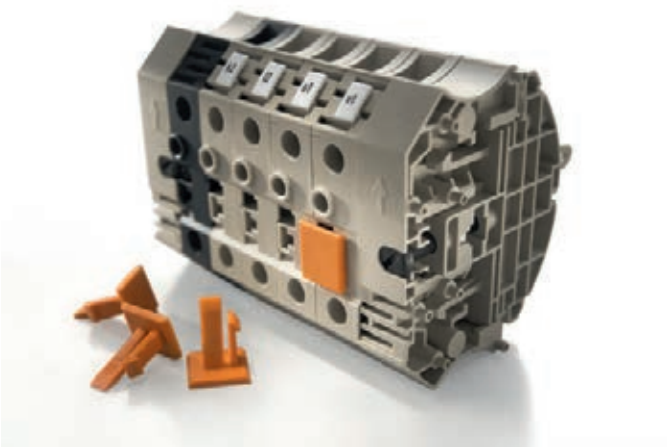

Industries and applications often have similar or even identical requirements for products or product assemblies. Application specific products that are based on earlier realised solutions are now directly available from stock.

Your advantage: You quickly get a suitable and cost-efficient solution.

Cross industrial solutions as standard
It is our aim to develop solutions that offer the additional advantage of a truly flexible design. Although this may mean an application-specific product may have an additional input or terminal you don't need, it can still be much cheaper than having a custom-made solution. Therefore, you not only save time, but money!

Reap multiple benefits:

- **High availability**
  Application specific products are available from stock without delay. So you can rely on the delivery of your products when you need them.
- **Advice from application engineers**
  Using the expertise of our applications engineers means that you can develop the solutions that are not only right, but which deliver added value to your applications.
- **Supportive software**
  Project planning and evaluation is made easy with our software solutions such as NetCalc, RailDesigner® or Softclinic.
- **Worldwide application centres**
  We stay in constant dialogue with our worldwide application centres, ensuring that our own application knowledge is shared, kept up to date and at your disposal anywhere you need us.

Customer specific assembly, tailored configuration

You may be looking to bring costs down and increase your efficiency. It may be that you would like more time to focus on your core competencies. You could be looking for a partner who will sent up intelligent solutions for you, that you can trust to deliver your specific requirements. Here at Weidmüller, we have a wealth of expertise, capability, and capacity to deliver custom solutions that are flexible, economically advantageous and on time.

We offer to work closely with you, providing support and advice, and in putting together the job specification. Furthermore, our broad product portfolio means that we can jointly work together on the selection of the best components to make up your custom solution.

Highest levels of professional production
You have complete access to our highly-skilled project management team and our production expertise, for example, in the ATEX area. We can offer you a comprehensive portfolio of customer-specific assemblies, from simple assembly to the modification of existing electronics products.

Our services include:
- Adaptation and assembly of enclosures for all IP protection classes
- ATEX solutions for hazardous areas
- Assembly of heavy duty connectors
- Assembly of terminal strips
- Customer specific electronics solutions
- Cable assembly

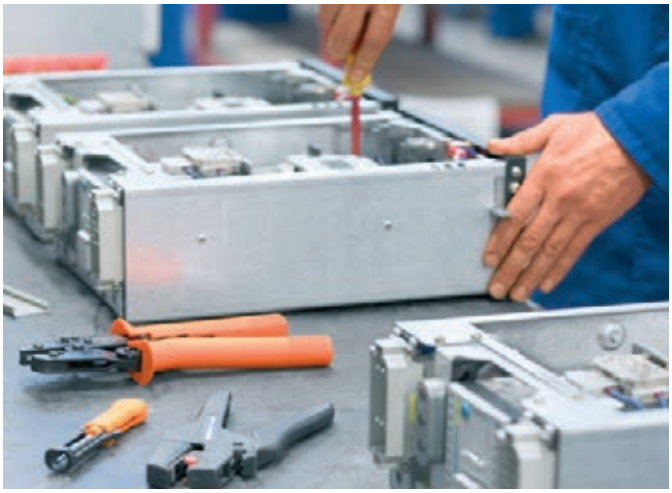

Take advantage of:
- **Simple ordering and stockholding information**
  One solution – one item number! It will no longer be necessary to order single components. Article variety and stockholding will be reduced.
- **Professional assembly**
  All individual components will be pre-assembled, reducing your own assembly time and costs.
- **Less costs for documentation**
  Our RailDesigner® software will facilitate the generation of parts lists or drawings.
- **Modern processing of enclosures**
  Our CNC processing centres can adapt the enclosures to suit your tailored solution.

Customer specific assembly – consultation, product, development and production – all from a single source

Our application and manufacturing expertise influences decisions on all areas of modern connection technology. They therefore play an integral part of every solution.

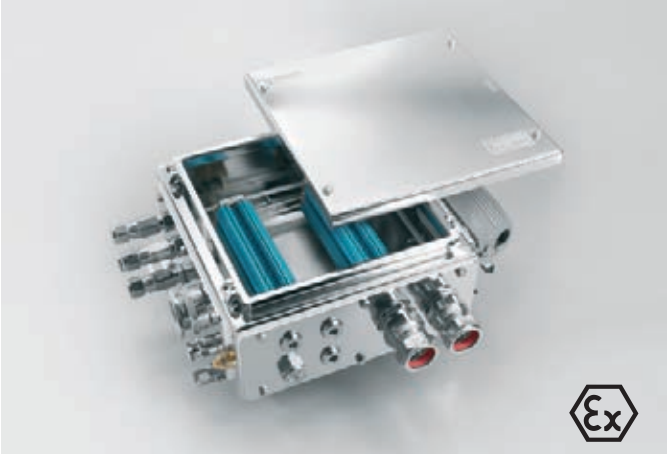

Enclosures
Perfect protection and safety
- Enclosures for all IP protection classes
- ATEX enclosures for hazardous areas
- Placement of inspection glasses, drill holes and threads
- Elaborate machining operations like the milling of contours
- Class C5 welding, according to DIN 6700, for stainless steel and sheet steel enclosures
- Surface coating as and when required
- Individual device and system markers

Heavy duty connectors
Perfect connection with system
- Placement of drill holes and cable glands
- Equipped with plug-and-play components
- Wiring of subassemblies
- Cable assembly
- All housings are available with individual laser marking

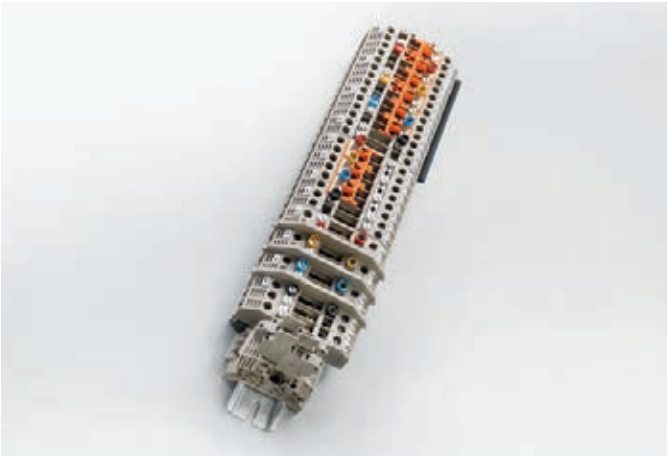

Terminal strips
Configuration made to measure
- Machining of mounting rails
- Snapping components onto terminal rails
- Placement of cross connections
- Mounting of standard wires
- Marking of terminals, devices, wires and cables

Electronics

Individual solution from the beginning

- Modular terminal blocks, component plugs, snap on bases, enclosures for electronics: integration of relevant electronic components
- Snap-on base: Component carrier design or simple wiring of the modules
- Interface units
- Modification of existing electronic products: Modification of the circuitry or specific calibration
- Combination of components: Relays or optocouplers in combination with other components

Cable assembly

Our special service

- Pre cutting of wires and cables
- Installation of
  - Heavy duty connectors
  - PCB connectors or DIN connectors
- Conditioning of wire ends
- Mounting of wire end ferrules and cable lugs
- Connection of wires to terminal rails

RailDesigner®
A faster way to configure and order terminal strips

These days, time and cost efficiency are of the essence when it comes to working in planning and production. RailDesigner®, our free configuration and purchasing software, uses its virtual assembly of mounting rails (assembled or unassembled) to help you with the design of your own completely personal solution.

RailDesigner® brings you substantial benefits:

Less time required
It speeds up the process of acquiring quotations and placing orders because, for example, all processes can be initiated directly from the software. You configure your projects and the rest virtually takes care of itself!

User friendly operation
Any potential errors are prevented by automatic installation tips and clear project processing and management. So that you can plan your project realistically, RailDesigner® offers both 2D and 3D displays.

Wide selection from the current product portfolio
"You can easily download software updates for RailDesigner® from the internet.
This means that you will always have access to the latest version of our product database."

Project planning that is compatible with your software
Plan and design your projects easily using your usual CAE software. With the integrated interface, transferring data from your CAE system has never been so simple. You can export component lists and terminal strip designs in various formats. Marking data is automatically transferred to the M-Print® Pro labelling software.

Simple purchasing of terminal strips
Once you have completed the planning stages of your projects in RailDesigner®, you can choose to send all of your data to us by email. Then we take over the assembly and deliver the required configuration to you, along with anything else that you still require for your project.

Download the software for free and discover the advantages to using RailDesigner® at **www.raildesigner.de**

Product assistant for distribution boxes and assemblies – The perfect solution, in the shortest time

You can easily and quickly select, combine and purchase the required components, all with the help of the Weidmüller product assistant for distribution boxes and assemblies. This means that you can rapidly obtain your individual enclosure solutions which may include the following components:

Empty enclosures without holes
Empty enclosures in various sizes of the Klippon® K and Klippon® POK series (aluminium and plastic) with matching mounting rails.

Empty enclosures with pre-threaded holes
Empty enclosures in different sizes from the Klippon® K and Klippon® POK series (aluminium and plastic), that are already equipped with metric threaded holes.

Mounting rails
Exactly tailored mounting rails for the enclosure sizes on offer.

Terminal strips
Mounting rails, which also perfectly match the offered enclosure sizes and are pre-fitted with terminals, optionally with screw or tension clamp connection.

Distribution boxes with Ex-protection
Enclosures that are already assembled with a terminal strip and already equipped with metric threaded holes.

Numerous possible combinations
Enclosures with Ex-protection are supplied exclusively with terminal strips that are already fitted. The product assistant offers you various approaches for industry variants so that you can create the right enclosure variant.

You can start off with any of the listed components and then add further components to the combination. This means that, for example, you can select the required terminal strip and the product assistant will then offer the matching enclosure variants.
Or, you can start with the enclosure, and matching terminal strips or mounting rails will then be chosen. The selected products can then be directly included in the query list.

Provision of all relevant data
During the selection, you can choose filters for the terminal strips, such as length, connection technology or dimensional cross-section and, for the enclosure, you can choose material, size, holes etc. If a product is then selected and combined, the user can view all of the relevant data, including drawings and pictures. This means that you can extensively plan how the enclosure will be integrated into the customer's application.
The product assistant is available at
http://galaxy.weidmueller.com

Online product catalogue

If you have questions about the specifications and details of our products, perhaps even outside normal business hours, then our online catalogue at
http://catalog.weidmueller.com
is opened 24 hours a day, 365 days a year and is the perfect source for information. Besides product features and part numbers, it contains extensive additional information on all product groups.

For further information, offers and your personal contact, simply consult the Weidmüller website at

www.weidmueller.com

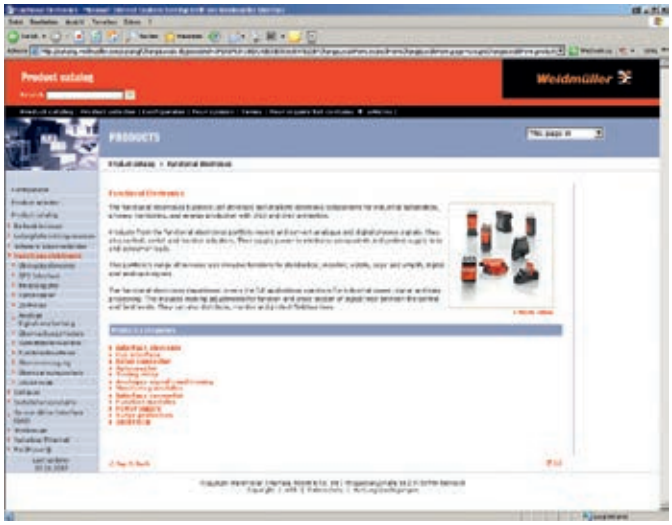

With one click selection for the product data sheet of your choice.

M-Print® PRO label designer

The comprehensive range of Weidmüller services includes the M-Print® PRO software. This is a professional standard, Windows®-based program for printing and ordering labels and markers that is coordinated with our current printing systems and marking materials.

M-Print® PRO enables you to design your labelling materials professionally and quickly. Texts, borders, lines, graphics, barcodes, serial numbers and photographs are all possible. The interface to RailDesigner® or your CAE system enables the transfer of all your configured data.

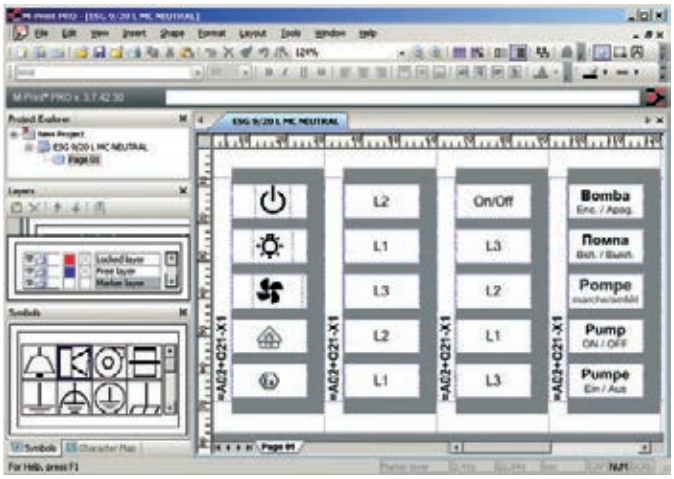

Technical appendix

Technical appendix	ATEX directive 1999/92/EC	W.2
	ATEX directive 94/9/EC	W.4
	IECEx scheme	W.5
	Classification of explosive groups in gas Ex protection	W.6
	Classification of zones and equipment categories	W.6
	Ratings plate of an empty enclosure	W.7
	IP class of protection	W.8

ATEX directive 1999/92/EC

Article 137 of the European Community Formation Treaty set out the minimum standards in order to improve workers' health and safety, this can also be put at risk by explosive atmospheres. An explosive atmosphere is a mixture of air and flammable gasses, vapours, mists or dust under atmospheric conditions where, following successful ignition, the burning process will propagate throughout the whole unburned mixture.

The ATEX directive 1999/92/EC was transferred into national law. Compliance with the minimum standards contained in this directive does not guarantee that all relevant national laws are met. It is possible for local regulators to introduce more stringent requirements.

The employer is required, according to the ATEX directive 1999/92/EC, to take measures to ensure the health and safety of the employees. One measure is the division of the area into zones where explosive atmospheres could be present.

Unless the risk analysis conducted by the employer indicates otherwise, all areas where an explosive atmosphere may be present must be equipped with devices and protective systems that meet the relevant category of the ATEX directive 94/9/EC.
In particular in these zones the following categories of equipment should be used, as long as they are suitable for use with gases, vapours, mists or dusts:

- In Zone 0 or Zone 20: category 1 devices,
- In Zone 1 or Zone 21: category 1 or category 2 devices,
- In Zone 2 or Zone 22: category 1, category 2 or category 3 devices.

Zoning according to the ATEX directive 1999/92/EC

Zone 0
An area which has a potentially explosive atmosphere that is a mixture of air and **flammable gases, vapours or mists**. The mixture is either permanently present or frequently present over long periods of time.

Zone 1
An area in which during normal operations a potentially explosive atmosphere of air and **flammable gases, vapours or mists** can occasionally form.

Zone 2
An area for which during normal operations there is at most only a short-term occurrence of a potentially explosive atmosphere of mixtures of air and **flammables gases, vapours or mists**.

Zone 20
An area where a potentially explosive atmosphere is present in the form of a **flammable dust** cloud in the air. This cloud is either permanently present or frequently present over long periods of time.

Zone 21
An area where, during normal operations, a potentially explosive atmosphere in the form of a **flammable dust** cloud in the air can occasionally form.

Zone 22
An area where, during normal operations, a potentially explosive atmosphere in the form of a **flammable dust** cloud in the air is not normally present or only present for a short time.

For the risk assessment and as well as the zoning concept described above, Ex devices themselves can be considered in an alternative process which uses the equipment protection level (EPL). These protective levels determine the internal ignition risk of a device where the sort of applied protection does not play a role.

The system of EPL classifications (Equipment Protection Level) is shown below.

Firedamp (methane) risk mines (Group I)

EPL Ma
Equipment for installation in mining applications, offering a „very high" level of protection and which do not constitute a source of ignition during normal operation, or in the event of rarely occurring faults.

EPL Mb
Equipment for installation in a mine with a high level of rotection. Has sufficient safety to ensure that there is no source of ignition in the period of time between the outbreak of gas and the time the equipment is switched off.

Gases (Group II)

EPL Ga
Equipment for explosive-risk gas atmospheres with a very high level of protection. No source of ignition is present during normal operation or when errors occur that cannot be necessarily expected on a regular basis.

EPL Gb
Equipment for explosive-risk gas atmospheres with a high level of protection. No source of ignition is present during normal operation or when errors occur that cannot be necessarily expected on a regular basis.

EPL Gc
Equipment for explosive-risk gas atmospheres with an elevated level of protection. No source of ignition is present during normal operation and it can have additional safeguards to ensure that none is present during faults which happen regularly (e. g. failure of a lamp).

Dust (Group III)

EPL Da
Equipment for combustible dust atmospheres with a very high level of protection. No source of ignition is present during normal operation or in very rare faults.

EPL Db
Equipment for combustible dust atmospheres with a high level of protection. No source of ignition is present during normal operation or when errors occur that cannot be necessarily expected on a regular basis.

EPL Dc
Equipment for combustible dust atmospheres with an elevated level of protection. No source of ignition is present during normal operation and it can have additional safeguards to ensure that none is present during faults which happen regularly (e. g. failure of a lamp).

ATEX directive 94/9/EC

Article 95 of the European Community Formation Treaty deals with the equalization of laws of the Member States. The ATEX directive 94/9/EC sets out the basic requirements for health and safety protection as a directive following the new concept. It is aimed at manufacturers of equipment and components designed for used in potentially explosive atmosphere areas.

This directive had to be adopted without deviation into national law.
In Germany, this was implemented through the enactment of the Explosion Protection Regulation (11 ExVO) of the Equipment and Product Safety Law (GPSGV). It applies to all industrial potentially explosive areas, including mines, and also covers protection from dust-ignited explosions.

This directive sets out the requirements for the products depending on their equipment group and category. This is the category as set down by the ATEX directive 1999/92/EC applicable for each appropriate zone.

To prove conformity with the basic health and safety regulations, harmonised standards are used. If the requirements as laid out in the Official Journal of the EU are met, then it will be in compliance with the standard requirements for conformity (presumption of conformity). Various, mostly equivalent, protection types have been standardised harmoniously.

This conformity assessment process of the directives sets out different procedures. For device category 3, the manufacturer can perform the conformity assessment itself. For devices of categories 1 and 2, this conformity check must be carried out at a notified body in the form of a EC type-examination. In addition, quality assurance must be monitored for the devices of categories 1, 2 and 3.

Weidmüller has devices and components in its product range. Empty enclosures are components and are certified at the factory as such. Installing certified components does not create a certified equipment. To do this, additional tests must be carried out.

Weidmüller offers customer-specific devices available as certified solutions. The production of assembled enclosures is monitored by a notified body.

IECEx scheme

The IECEx scheme is an international certification scheme for products which meet the requirements of the international standards, e.g. the technical committee TC31's IEC standards.

The certificates awarded in this scheme are published on the IECEx website (www.iecex.com) as an electronic certificate. They can be viewed online and printed out.

A Certificate of Conformity (CoC) refers to a test report (Ex Test Report ExTR) and on an assessment of the quality assessment report from the manufacturer (QAR).

The standards used for the production of the test report correspond almost entirely to the harmonised standards in Europe. Recent EN standards were initially adopted as IEC standards.

Protection concepts

The zoning described above provides the basis for the selection of the type of ignition protection. So, as an example, in the ATEX applicable areas, only ignition protection devices meeting Ex ia for Zone 0 (highest probability of an explosive atmosphere being present) are allowed.

Increased safety Ex e
No sparks and a surface temperature limited to a safe level

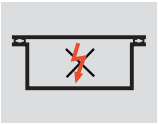

Increased safety is for products where there are no sparks produced during normal operation or in case of a failure. The surface temperature of the relevant parts is limited to a value below the ignition temperature. Increased safety is achieved by reducing the current load and raising the isolation properties and by maintaining clearance and creepage distances above the value in an industrial application. The highest voltage permitted for this protection scheme is 11 kV (D.C. or A.C. rms).

This protection scheme is usually used for distribution cabinets..

Intrinsically safe Ex i
Limited to a safe level of ignition energy

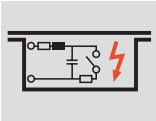

Intrinsic safety is for products where electrical energy which flows into the product, or is stored in the product, is not sufficient to ignite the surrounding explosive atmosphere. This also applies in fault conditions. The methods that achieve intrinsic safety mean that it is important that not only the devices installed in direct contact with the explosive atmosphere are constructed correctly, but also the electrical devices to which they are connected.

Intrinsically safe equipment and intrinsically safe parts of the associated equipment are divided into protection levels: ia (for zones 0, 1, and 2), ib (for zones 1 and 2), and ic (only for zone 2).

A typical application area are control and display circuits with low voltage and current.

Pressure-resistant Ex d encapsulation
Limits the explosion to the inside of the enclosure

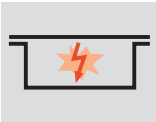

Pressure-resistant encapsulated enclosures are designed for devices where sparks are generated or which have hot surfaces which are a source of ignition during normal operation. Similarly, industrial components for use in potentially explosive atmospheres are often made suitable by encapsulating them in a pressure-resistant enclosure which otherwise could not be used.

The surrounding possibly explosive atmosphere can enter the enclosure and will produce an internal explosion during the equipment's lifespan.

The enclosure must therefore be stable enough to ensure that it is not deformed or destroyed by the pressure created. All connections of the enclosure are sized so that they cannot transmit an explosion from inside to the surrounding atmosphere. These connections are known as ignition gaps.

For this sort of ignition protection the explosion groups apply (IIA, IIB, IIC). Devices using this protection principle may not be installed in Zone 0.

Classification of explosive groups in gas Ex protection

Flammable gases, vapours or mists are divided according to their ignition resistance capacity into the explosive groups IIA, IIB and IIC. This classification is based on the respective maximum experimental safe gap (MESG) and the minimum ignition current of the gases. The lower this value, the higher the danger presented by the gases. The danger of the gas increases from IIA to IIC so that all equipment certified for use in IIC areas may also be used in IIA and IIB areas.

Explosion group	Maximum experimental safe gap (MESG)	Minimum ignition current
IIA	> 0.9 mm	> 0.8
IIB	0.5 mm to 0.9 mm	0.45 to 0.8
IIC	< 0.9 mm	< 0.45

Definition of dust ignition protection

Dust refers to solid particles contained in the atmosphere, which eventually settle due to their own weight, but which for a time are present in the atmosphere as a dust-air mixture.

Classification of zones and equipment categories

Combustible ingredients	Explosive atmospheres	Zone division	Identification	
			Equipment group	Device category
Gas, mist, vapours/fumes (G / Gas)	permanent, long-term	Zone 0	II	1G
	occasionally	Zone 1	II	2G
	unlikely, short-term	Zone 2	II	3G
Dusts (D / Dust)	permanent, long-term	Zone 20	II	1D
	occasionally	Zone 21	II	2D
	unlikely, short-term	Zone 22	II	3D

Ratings plate of an Ex-certified empty enclosure

1 Number of the notified body

2 Part No.

3 Part designation

4 Ex marking

5 Equipment group

6 Device category

7 • G Gas (gas)
• D flammable dust

8 Explosion protection type

9 IP ingress protection class (DIN EN 60529)

10 EC type-examination certificate

11 Year of manufacture

12 Name and address of manufacturer

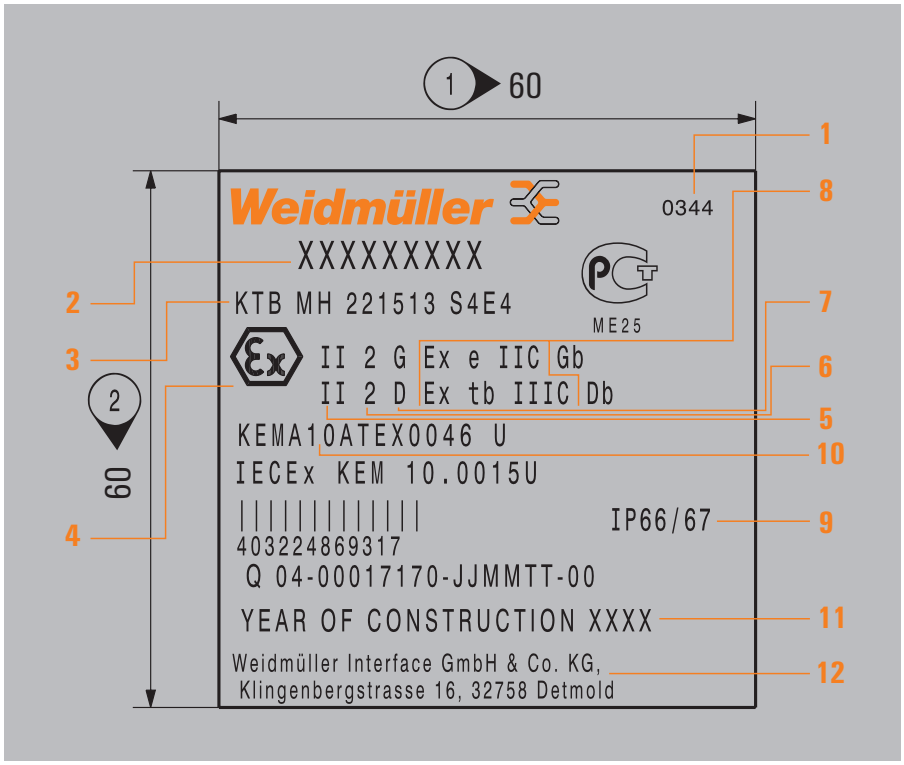

IP class of protection to DIN EN 60529

The ingress protection class or IP rating is indicated by a code consisting of the two letters IP and two digits representing the class of protection.

Example: **I P 6 5**

2nd digit: protection from liquids
1st digit: protection from solid bodies

Protection against intrusion of external particle matter (1st digit)

Code digit		
0	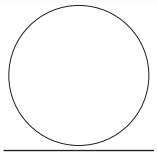	No protection
1		Protection against ingress of large solid bodies with diameter > 50 mm. (Protection to prevent dangerous parts being touched with the back of the hand.)
2		Protection against ingress of large solid bodies with diameter > 12.5 mm. (Protection to prevent dangerous parts being touched with the fingers.)
3		Protection against ingress of large solid bodies with diameter > 2.5 mm. (Protection to prevent dangerous parts being touched with a tool.)
4		Protection against ingress of large solid bodies with diameter > 1 mm. (Protection to prevent dangerous parts being touched with a piece of wire.)
5		Protection against harmful deposits of dust, which cannot enter in an amount sufficient to interfere with satisfactory operation.
6		Complete protection against ingress of dust.

Protection against penetration of liquids (2nd digit)

Code digit		
0	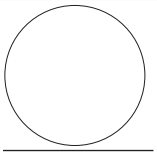	No protection
1	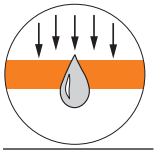	Protection against drops of condensed water falling vertically.
2	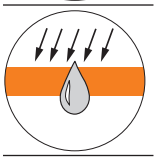	Protection against drops of liquid falling at an angle of 15° with respect to the vertical.
3	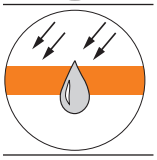	Protection against drops of liquid falling at an angle of 60° with respect to the vertical.
4	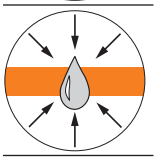	Protection against liquids splashed from any direction.
5	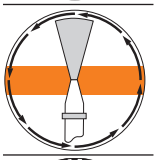	Protection against water jets projected by a nozzle from any direction.
6		Protection against water from heavy sea on ships'decks.
7	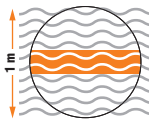	Protection against immersion in water under defined conditions of pressure and time.
8	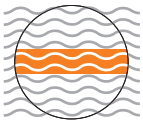	Protection against indefinite immersion in water under defined conditions of pressure (which must be agreed between manufacturer and user and must be more adverse than number 7).

Definition of the protection degrees according to NEMA, UL and CSA

Type	NEMA	UL	CSA
Designation	National Electrical Manufacturers Association NEMA 250-1991	Underwriters Laboratories Inc. UL 50 und UL 508	Canadian Standards Association CSA-C22.2 No. 94-M91
Type 1	Enclosure predominately for indoor use. Protection against penetration by solid foreign bodies.	Enclosure predominately for indoor use. Protection against penetration by solid foreign bodies.	Enclosure for general use. Protection against accidental contact with live components.
Type 2	Enclosure predominately for indoor use. Protection against penetration by solid foreign bodies and water.	Enclosure predominately for indoor use. Protection against penetration by solid foreign bodies and water.	Enclosure for indoor use. Protection against non-corrosive drops/splashes of liquid and foreign bodies.
Type 3	Enclosure predominately for indoor use. Protection against penetration by rainfall and dust as well as damage due to ice formation.	Enclosure predominately for indoor use. Protection against penetration by rainfall and dust as well as damage due to ice formation.	Enclosure for indoor or outdoor use. Protection against penetration by rainfall and snow as well as damage due to ice formation.
Type 3R	Enclosure predominately for indoor use. Protection against rain and snow as damage due to ice-formation.	Enclosure predominately for indoor use. Protection against rain and snow as damage due to ice-formation.	Enclosure for indoor or outdoor use. Protection against penetration by rainfall and snow as well as damage due to ice formation.
Type 3S	Enclosure predominately for indoor use. Protection against rain, snow and foreign bodies. External mechanisms can be operated despite ice accumulation.	Enclosure predominately for indoor use. Protection against rain, snow and foreign bodies. External mechanisms can be operated despite ice accumulation.	Enclosure for indoor or outdoor use. Protection against rain, snow and foreign bodies. External mechanisms can be operated despite ice accumulation.
Type 4	Enclosure for indoor or outdoor use. Protection against rain, foreign bodies, splashing water and hose water as well as damage due to ice-formation on the outside of the enclosure.	Enclosure for indoor or outdoor use. Protection against rain, foreign bodies, splashing water and hose water as well as damage due to ice-formation on the outside of the enclosure.	Enclosure for indoor or outdoor use. Protection against rain, snow, foreign bodies, splashing water and hose water as well as damage due to ice-formation on the outside of the enclosure.
Type 4X	Enclosure for indoor or outdoor use. Protection against corrosion, rain, foreign bodies, splashing water and hose water as well as damage due to ice-formation on the outside of the enclosure.	Enclosure for indoor or outdoor use. Protection against corrosion, rain, foreign bodies, splashing water and hose water as well as damage due to ice-formation on the outside of the enclosure.	Enclosure for indoor or outdoor use. Protection against rain, foreign bodies, splashing water and hose water as well as damage due to ice-formation on the outside of the enclosure.
Type 6	Enclosure for indoor or outdoor use. Protection against hose water as well as against penetration by water during immersion; protection damage due to ice formation on the outside of the enclosure.	Enclosure for indoor or outdoor use. Protection against hose water as well as against penetration by water during immersion; protection damage due to ice formation on the outside of the enclosure.	Enclosure for indoor or outdoor use. Protection against penetration by water during immersion; protection damage due to ice formation on the outside of the enclosure.
Type 12	Enclosure for indoor use. Protection against dust accumulation, foreign bodies and non-corrosive drops of liquids.	Enclosure for indoor use. Protection against dust accumulation, foreign bodies and non-corrosive drops of liquids.	Enclosure for indoor or outdoor use. Protection against a build-up of dust, fibres and foreign bodies as well as against non-corrosive liquid drips, without pre-formed openings.
Type 13	Enclosure for indoor use. Protection against dust build-up, splashing water, oil, and non-corrosive coolants.	Enclosure for indoor use. Protection against dust build-up, splashing water, oil, and non-corrosive coolants.	Enclosure for indoor or outdoor use. Protection against a build-up of dust, fibres and foreign bodies as well as against non-corrosive liquid sprays including oil and coolants.

Index

Index	Index Type	X.2
	Index Order No.	X.8
	Addresses worldwide	X.16

Type	Order No.	Page
A		
ADAP EX 1 1/2-1 1/2NPT	1738910000	C.67
ADAP EX 1 1/2NPT-1 1/4	1738800000	C.67
ADAP EX 1 1/2NPT-1/2NPT	1738370000	C.67
ADAP EX 1 1/2NPT-1NPT	1738680000	C.67
ADAP EX 1 1/2NPT-3/4NPT	1738530000	C.67
ADAP EX 1 1/4-1 1/4NPT	1738810000	C.67
ADAP EX 1 1/4NPT-1 1/2	1738920000	C.67
ADAP EX 1 1/4NPT-1/2NPT	1738380000	C.67
ADAP EX 1 1/4NPT-1NPT	1738690000	C.67
ADAP EX 1 1/4NPT-3/4NPT	1738540000	C.67
ADAP EX 1/2NPT-3/4NPT	1738570000	C.67
ADAP EX 1/2NPT-M16	1737490000	C.67
ADAP EX 1/2NPT-M20	1737650000	C.67
ADAP EX 1/2NPT-M25	1737810000	C.67
ADAP EX 1NPT-1 1/4NPT	1738820000	C.67
ADAP EX 1NPT-1/2NPT	1738390000	C.67
ADAP EX 1NPT-1NPT	1738700000	C.67
ADAP EX 1NPT-3/4NPT	1738550000	C.67
ADAP EX 1NPT-M20	1737630000	C.67
ADAP EX 1NPT-M25	1737790000	C.67
ADAP EX 1NPT-M40	1738070000	C.67
ADAP EX 2 1/2-2 1/2NPT	1739050000	C.67
ADAP EX 2 1/2NPT-1 1/2	1738890000	C.67
ADAP EX 2 1/2NPT-1 1/4	1738780000	C.67
ADAP EX 2 1/2NPT-1/2	1738350000	C.67
ADAP EX 2 1/2NPT-1NPT	1738660000	C.67
ADAP EX 2 1/2NPT-2NPT	1738980000	C.67
ADAP EX 2 1/2NPT-3/4NPT	1738510000	C.67
ADAP EX 2 1/2NPT-3NPT	1739100000	C.67
ADAP EX 2 1/2NPT-M16	1737430000	C.67
ADAP EX 2 1/2NPT-M20	1737590000	C.67
ADAP EX 2 1/2NPT-M25	1737750000	C.67
ADAP EX 2 1/2NPT-M32	1737900000	C.67
ADAP EX 2 1/2NPT-M40	1738030000	C.67
ADAP EX 2 1/2NPT-M50	1738140000	C.67
ADAP EX 2 1/2NPT-M63	1738230000	C.67
ADAP EX 2 1/2NPT-M75	1738300000	C.67
ADAP EX 2NPT-1 1/2NPT	1738900000	C.67
ADAP EX 2NPT-1 1/4NPT	1738790000	C.67
ADAP EX 2NPT-1/2NPT	1738360000	C.67
ADAP EX 2NPT-1NPT	1738670000	C.67
ADAP EX 2NPT-2 1/2NPT	1739060000	C.67
ADAP EX 2NPT-2NPT	1738990000	C.67
ADAP EX 2NPT-3/4NPT	1738520000	C.67
ADAP EX 2NPT-M16	1737440000	C.67
ADAP EX 2NPT-M20	1737600000	C.67
ADAP EX 2NPT-M25	1737760000	C.67
ADAP EX 2NPT-M32	1737910000	C.67
ADAP EX 2NPT-M40	1738040000	C.67
ADAP EX 2NPT-M50	1738150000	C.67
ADAP EX 2NPT-M63	1738240000	C.67
ADAP EX 2NPT-M75	1738310000	C.67
ADAP EX 3/4NPT-1/2NPT	1738400000	C.67
ADAP EX 3/4NPT-3/4NPT	1738560000	C.67
ADAP EX 3/4NPT-M20	1737640000	C.67
ADAP EX 3/4NPT-M25	1737800000	C.67
ADAP EX 3/4NPT-M32	1737950000	C.67
ADAP EX 3NPT-1 1/2NPT	1738880000	C.67
ADAP EX 3NPT-1 1/4NPT	1738770000	C.67
ADAP EX 3NPT-1/2NPT	1738340000	C.67
ADAP EX 3NPT-1NPT	1738650000	C.67
ADAP EX 3NPT-2 1/2NPT	1739040000	C.67
ADAP EX 3NPT-2NPT	1738970000	C.67
ADAP EX 3NPT-3/4NPT	1738500000	C.67
ADAP EX 3NPT-3NPT	1739090000	C.67
ADAP EX 3NPT-M16	1737420000	C.67
ADAP EX 3NPT-M20	1737580000	C.67
ADAP EX 3NPT-M25	1737740000	C.67
ADAP EX 3NPT-M32	1737890000	C.67
ADAP EX 3NPT-M40	1738020000	C.67
ADAP EX 3NPT-M50	1738130000	C.67
ADAP EX 3NPT-M63	1738220000	C.67
ADAP EX 3NPT-M75	1738290000	C.67
ADAP EX M16-M20	1737730000	C.68
ADAP EX M20-1/2NPT	1738480000	C.68
ADAP EX M20-3/4NPT	1738640000	C.68
ADAP EX M20-M16	1737560000	B.154
ADAP EX M20-M20	1737720000	C.68
ADAP EX M20-M25	1737880000	C.68
ADAP EX M25-1NPT	1738760000	C.68
ADAP EX M25-3/4NPT	1738630000	C.68
ADAP EX M25-M16	1737550000	C.68
ADAP EX M25-M20	1737710000	C.68
ADAP EX M25-M32	1738010000	C.68
ADAP EX M32-1 1/4NPT	1738870000	C.68
ADAP EX M32-1/2NPT	1738460000	C.68
ADAP EX M32-1NPT	1738750000	C.68
ADAP EX M32-M16	1737540000	C.68
ADAP EX M32-M20	1737700000	C.68
ADAP EX M32-M25	1737860000	C.68
ADAP EX M32-M40	1738120000	C.68
ADAP EX M40-1/2NPT	1738450000	C.68
ADAP EX M40-1NPT	1738740000	C.68
ADAP EX M40-3/4NPT	1738610000	C.68
ADAP EX M40-M16	1737530000	C.68
ADAP EX M40-M20	1737690000	C.68
ADAP EX M40-M25	1737850000	C.68
ADAP EX M40-M32	1737990000	C.68
ADAP EX M40-M40	1738110000	C.68
ADAP EX M40-M50	1738210000	C.68
ADAP EX M50-1 1/4NPT	1738850000	C.68
ADAP EX M50-1/2NPT	1738440000	C.68
ADAP EX M50-1NPT	1738730000	C.68
ADAP EX M50-3/4NPT	1738600000	C.68
ADAP EX M50-M16	1737520000	C.68
ADAP EX M50-M20	1737680000	C.68
ADAP EX M50-M25	1737840000	C.68
ADAP EX M50-M32	1737980000	C.68
ADAP EX M50-M40	1738100000	C.68
ADAP EX M50-M63	1738280000	C.68
ADAP EX M63-1 1/2NPT	1738940000	C.68
ADAP EX M63-1 1/4NPT	1738840000	C.68
ADAP EX M63-1/2NPT	1738430000	C.68
ADAP EX M63-1NPT	1738720000	C.68
ADAP EX M63-2 1/2NPT	1739080000	C.68
ADAP EX M63-3/4NPT	1738590000	C.68
ADAP EX M63-M16	1737510000	C.68
ADAP EX M63-M20	1737670000	C.68
ADAP EX M63-M25	1737830000	C.68
ADAP EX M63-M32	1737970000	C.68
ADAP EX M63-M40	1738090000	C.68
ADAP EX M63-M50	1738190000	C.68
ADAP EX M63-M75	1738330000	C.68
ADAP EX M75-1 1/2NPT	1738930000	C.68
ADAP EX M75-1 1/4NPT	1738830000	C.68
ADAP EX M75-1/2NPT	1738420000	C.68
ADAP EX M75-1NPT	1738710000	C.68
ADAP EX M75-2 1/2NPT	1739070000	C.68
ADAP EX M75-2NPT	1739010000	C.68
ADAP EX M75-3/4NPT	1738580000	C.68
ADAP EX M75-3NPT	1739110000	C.68
ADAP EX M75-M16	1737500000	C.68
ADAP EX M75-M20	1737660000	C.68
ADAP EX M75-M25	1737820000	C.68
ADAP EX M75-M32	1737960000	C.68
ADAP EX M75-M40	1738080000	C.68
ADAP EX M75-M50	1738180000	C.68
ADAP EX M75-M63	1738260000	C.68
ADAPAP EX 1/2NPT-1/2NPT	1738410000	C.67
B		
BD 1 brass	3080760000	C.71
BD 1 ss	3080770000	C.71
BK 4/E	7906080000	B.150
C		
CABTITE KEL 16/2	1825860000	D.5
CABTITE KEL 16/4	1825900000	D.5
CABTITE KEL 16/4 EMV	1825750000	D.8
CABTITE KEL 16/5	1849770000	D.5
CABTITE KEL 16/8	1825910000	D.5
CABTITE KEL 24/10	1827760000	D.5
CABTITE KEL 24/4	1825930000	D.5
CABTITE KEL 24/5	1825940000	D.5
CABTITE KEL 24/5 EMV	1825760000	D.8
CABTITE KEL 24/7	1849760000	D.5
CABTITE KEL B1	1048170000	D.6
CABTITE KEL B4	1048180000	D.6
CABTITE KEL SNAP 16	1827770000	D.5
CABTITE KEL SNAP 24	1827780000	D.5
CABTITE KEL SNAP B4	1048190000	D.6
CABTITE KEL-DP 24/14	1039850000	D.7
CABTITE KEL-DP 24/17	1039870000	D.7
CABTITE KEL-DP 24/19	1039890000	D.7
CABTITE KEL-DP 24/26	1039930000	D.7
CABTITE KEL-DP 24/48	1039940000	D.7
CABTITE KEL-DP 24/50	1039950000	D.7
CABTITE KEL-DP 32/10	1040310000	D.7
CABTITE KEL-DP 32/10/2	1040120000	D.7
CABTITE KEL-DP 50/12	1040330000	D.7
CABTITE KEL-DP 50/12/2	1040160000	D.7
CABTITE KEL-DP 50/16	1040350000	D.7
CABTITE KEL-DP 50/16/2	1040180000	D.7
CABTITE KEL-DP 50/18	1040360000	D.7
CABTITE KEL-DP 50/18/2	1040210000	D.7
CABTITE KEL-DP 50/20	1040370000	D.7
CABTITE KEL-DP 50/20/2	1040240000	D.7
CABTITE KEL-DP 50/9	1040320000	D.7
CABTITE KEL-DP 50/9/2	1040130000	D.7
CABTITE KT 10	1826530000	D.3
CABTITE KT 10 b	1827870000	D.3
CABTITE KT 11	1826540000	D.3
CABTITE KT 11 b	1827880000	D.3
CABTITE KT 12	1826550000	D.3
CABTITE KT 12 b	1827890000	D.3
CABTITE KT 13	1826560000	D.3
CABTITE KT 13 b	1827900000	D.3
CABTITE KT 14	1826570000	D.3
CABTITE KT 14 b	1827910000	D.3
CABTITE KT 15	1826580000	D.3
CABTITE KT 15 b	1827920000	D.3
CABTITE KT 16	1825950000	D.3
CABTITE KT 16 b	1827950000	D.3
CABTITE KT 17	1826300000	D.3
CABTITE KT 17 b	1827960000	D.3
CABTITE KT 18	1826310000	D.3
CABTITE KT 18 b	1827970000	D.3
CABTITE KT 19	1826320000	D.3
CABTITE KT 19 b	1827980000	D.3
CABTITE KT 2/4	1826620000	D.3
CABTITE KT 2/4 b	1828130000	D.3
CABTITE KT 2/5	1826630000	D.3
CABTITE KT 2/5 b	1828140000	D.3
CABTITE KT 2/6	1826640000	D.3
CABTITE KT 2/6 b	1828150000	D.3
CABTITE KT 20	1826330000	D.3
CABTITE KT 20 b	1827990000	D.3
CABTITE KT 21	1826340000	D.3
CABTITE KT 21 b	1828000000	D.3
CABTITE KT 22	1826350000	D.3
CABTITE KT 22 b	1828010000	D.3
CABTITE KT 23	1826360000	D.3
CABTITE KT 23 b	1828020000	D.3
CABTITE KT 24	1826370000	D.3
CABTITE KT 24 b	1828030000	D.3
CABTITE KT 25	1826380000	D.3
CABTITE KT 25 b	1828040000	D.3
CABTITE KT 26	1826390000	D.3
CABTITE KT 26 b	1828050000	D.3
CABTITE KT 27	1826400000	D.3
CABTITE KT 27 b	1828060000	D.3
CABTITE KT 28	1826410000	D.3
CABTITE KT 28 b	1828070000	D.3
CABTITE KT 29	1826420000	D.3
CABTITE KT 29 b	1828080000	D.3
CABTITE KT 3	1826460000	D.3
CABTITE KT 3 b	1827790000	D.3
CABTITE KT 30	1826430000	D.3
CABTITE KT 30 b	1828090000	D.3
CABTITE KT 32	1826440000	D.3
CABTITE KT 32 b	1828100000	D.3
CABTITE KT 34	1826450000	D.3
CABTITE KT 34 b	1828110000	D.3
CABTITE KT 4	1826470000	D.3
CABTITE KT 4 b	1827800000	D.3
CABTITE KT 4/5	1826650000	D.3
CABTITE KT 4/5 b	1828160000	D.3
CABTITE KT 5	1826480000	D.3
CABTITE KT 5 b	1827810000	D.3
CABTITE KT 6	1826490000	D.3
CABTITE KT 6 b	1827830000	D.3
CABTITE KT 7	1826500000	D.3
CABTITE KT 7 b	1827840000	D.3
CABTITE KT 8	1826510000	D.3
CABTITE KT 8 b	1827850000	D.3
CABTITE KT 9	1826520000	D.3
CABTITE KT 9 b	1827860000	D.3
CABTITE KT ASI	1826610000	D.3
CABTITE KT ASI b	1828120000	D.3
CABTITE KT ATG	1828190000	D.3
CABTITE KT ATG b	1828220000	D.3
CABTITE KT BTG	1828180000	D.3
CABTITE KT BTG b	1828210000	D.3
CABTITE KT BTK	1828170000	D.3
CABTITE KT BTK b	1828200000	D.3
CABTITE KTs 16	1826590000	D.3
CABTITE KTs 16 b	1827930000	D.3
CABTITE KTs 17	1826600000	D.3
CABTITE KTs 17 b	1827940000	D.3
CABTITE KV T 25	1826660000	D.10
CABTITE KV T 32	1826670000	D.10
CABTITE KV T 63-1	1828240000	D.10
CABTITE KV T 63-4	1828230000	D.10
CABTITE KZL 140 C	1040030000	D.9
CABTITE KZL 140 TS39	1039960000	D.9
CABTITE KZL 39 C	1040080000	D.9
CABTITE KZL 39 TS35	1039990000	D.9
CABTITE KZL 80 C	1040060000	D.9
CABTITE KZL 80 TS35	1039970000	D.9
Cabtite Sample Kit	1849780000	D.2
CABTITE SUBD9	1828250000	D.10
CROSS-KEY MASTER	9918150000	E.23
CROSS-KEY UNIVERSAL	9918130000	E.23
CROSS-KEY UNIVERSAL S	9918140000	E.23
D		
DAE M12 PA long	1868570000	C.69
DAE M12 PA short	1868560000	C.69
DAE M12 SS	1868550000	C.70
DESC M6X14 KTB SET	1253230000	B.15
DMS MANUELL 0,5-1,7	9918370000	E.11
DMS MANUELL 2,0-8,0	9918380000	E.11
DMSI MANUELL 0,5-1,7	9918390000	E.12
DMSI MANUELL 2,0-8,0	9918400000	E.12
DOHA KTB A4 S2 R	1252730000	B.26
DOHA KTB A5 S2 R	1252750000	B.24
DOHA KTB A6 S2 R	1252780000	B.16
E		
EA-RING MS/M 16	1736480000	C.55
EA-RING MS/M 20	1736490000	C.55
EA-RING MS/M 25	1736500000	C.55
EA-RING MS/M 32	1736510000	C.55
EA-RING MS/M 40	1736520000	C.55
EA-RING MS/M 50	1736530000	C.55
EA-RING MS/M 63	1736540000	C.55
EA-RING MS/M 75	1736550000	C.55
EA-RING MS/M16 SC	0930710001	C.56
EA-RING MS/M20 SC	0930710002	C.56
EA-RING MS/M25 SC	0930710003	C.56
EA-RING MS/M32 SC	0930710004	C.56
EA-RING MS/M40 SC	0930710005	C.56
EA-RING MS/M50 SC	0930710006	C.56
EA-RING MS/M63 SC	0930710007	C.56
EA-RING MS/M75 SC	0930710008	C.56
EB K51/POK5	9511210000	B.143
EB K52/POK	9511220000	B.144
EB K61/POK6	9511230000	B.146
EB K71/POK10	9511190000	B.148
EF TBF 19/15	9502930000	B.194
EF TBF 30/30	9502950000	B.195
EF TBF 37/30	9502960000	B.195
EF TBF 60/30	9502990000	B.197
EF TBF 60/37	9503000000	B.198
EF TBF 60/60	9503010000	B.198
ES TBF M10 brass	9502710000	B.194
ES TBF M10 ss	9500870000	B.194
ES TBF M6 brass	9502700000	B.194
ES TBF M6 ss	9505240000	B.194
EWS M 25X1,5	1719740000	C.72
F		
FKSC M6X8 D9/SW3	0642600000	B.15
FLECAFIX 11/24	9015900000	E.13
FLECAFIX 24/36	9015980000	E.13
FPC 20/20/13 7035	9535690000	B.209
FPC 20/20/13 trsp	9535680000	B.209
FPC 20/30/13 7035	9535710000	B.209
FPC 20/30/13 trsp	9535700000	B.209
FPC 20/40/13 7035	9535730000	B.210
FPC 20/40/13 trsp	9535720000	B.210
FPC 30/30/13 7035	9535750000	B.210
FPC 30/30/13 trsp	9535740000	B.210
FPC 30/40/13 7035	9535770000	B.211
FPC 30/40/13 trsp	9535760000	B.211
FPC 40/60/13 7035	9535810000	B.211
FPC 40/60/13 trsp	9535820000	B.211
G		
GFSC M5x10 TX20 SET	1274150000	B.15
GWDR M12-NP	1913320000	C.52
GWDR M12-PO	1777920000	C.51
GWDR M16-NP	1736230000	C.52
GWDR M16-PO	1777930000	C.51
GWDR M20-NP	1736240000	C.52
GWDR M20-PO	1777940000	C.51
GWDR M25-NP	1736250000	C.52
GWDR M25-PO	1777950000	C.51
GWDR M32-NP	1736260000	C.52
GWDR M32-PO	1777960000	C.51
GWDR M40-NP	1736270000	C.52
GWDR M40-PO	1777970000	C.51
GWDR M50-NP	1736280000	C.52
GWDR M50-PO	1777980000	C.51
GWDR M63-NP	1736290000	C.52
GWDR M63-PO	1777990000	C.51
GWDR PG11-NP	1719560000	C.52
GWDR PG11-PO	1719460000	C.51
GWDR PG13,5-NP	1719570000	C.52
GWDR PG13,5-PO	1719470000	C.51
GWDR PG16-NP	1719580000	C.52
GWDR PG16-PO	1719480000	C.51
GWDR PG21-NP	1719590000	C.52
GWDR PG21-PO	1719490000	C.51
GWDR PG29-NP	1719600000	C.52
GWDR PG29-PO	1719500000	C.51
GWDR PG36-NP	1719610000	C.52
GWDR PG36-PO	1719510000	C.51
GWDR PG42-NP	1719620000	C.52
GWDR PG42-PO	1719520000	C.51
GWDR PG48-NP	1719630000	C.52
GWDR PG48-PO	1719530000	C.51
GWDR PG7-NP	1719540000	C.52
GWDR PG7-PO	1719440000	C.51
GWDR PG9-NP	1719550000	C.52
GWDR PG9-PO	1719450000	C.51
H		
HG FPC	9535990000	B.209
HG K+POK	1580360000	B.134
HG MPC	9535590000	B.202
I		
IE-KO-HAT	1966810000	E.5
IE-KOK-V1	1966780000	E.6
IE-KOK-V14	1135240000	E.6

Type	Order No.	Page
IE-KOK-V4	1966790000	E.6
IE-KOK-V5	9204790000	E.6
IS 2 KG	1806630000	E.22
IS 3 KG	1806650000	E.22
IS 4 DIN 6911	0485100000	E.22
IS 4 KG	1806660000	E.22
IS 6 DIN 6911	0407900000	E.22
IS 8 DIN 6911	0235000000	E.22

K

Type	Order No.	Page
KDSU M20 BN O NI 1 G16	1083280000	C.31
KDSU M20 BN O NI 1 G20	1083320000	C.31
KDSU M20 BN O NI 1 G20S	1083290000	C.31
KDSU M20 BN O NI 2 G16	1911380000	C.31
KDSU M20 BN O NI 2 G20	1911400000	C.31
KDSU M20 BN O NI 2 G20S	1911390000	C.31
KDSU M20 BN O SC 1 G16	1076120000	C.30
KDSU M20 BN O SC 1 G20	1076140000	C.30
KDSU M20 BN O SC 1 G20S	1076130000	C.30
KDSU M20 BN O SC 2 G16	1909260000	C.30
KDSU M20 BN O SC 2 G20	1909300000	C.30
KDSU M20 BN O SC 2 G20S	1909290000	C.30
KDSU M20 BS O NI 1 G16	0930001221	C.33
KDSU M20 BS O NI 1 G20	0930021221	C.33
KDSU M20 BS O NI 1 G20S	0930011223	C.33
KDSU M20 BS O NI 2 G16	0930001222	C.33
KDSU M20 BS O NI 2 G20	0930021222	C.33
KDSU M20 BS O NI 2 G20S	0930011224	C.33
KDSU M20 BS O SC 1 G16	0930001211	C.32
KDSU M20 BS O SC 1 G20	0930021211	C.32
KDSU M20 BS O SC 1 G20S	0930011213	C.32
KDSU M20 BS O SC 2 G16	0930001212	C.32
KDSU M20 BS O SC 2 G20	0930021212	C.32
KDSU M20 BS O SC 2 G20S	0930011214	C.32
KDSU M25 BN O NI 1 G25	1083330000	C.31
KDSU M25 BN O NI 2 G25	1911420000	C.31
KDSU M25 BN O SC 1 G25	1076150000	C.30
KDSU M25 BN O SC 2 G25	1909310000	C.30
KDSU M25 BS O NI 1 G25	0930031221	C.33
KDSU M25 BS O NI 2 G25	0930031222	C.33
KDSU M25 BS O SC 1 G25	0930031211	C.32
KDSU M25 BS O SC 2 G25	0930031212	C.32
KDSU M32 BN O NI 1 G32	1083340000	C.31
KDSU M32 BN O NI 2 G32	1911430000	C.31
KDSU M32 BN O SC 1 G32	1076160000	C.30
KDSU M32 BN O SC 2 G32	1909320000	C.30
KDSU M32 BS O NI 1 G32	0930041221	C.33
KDSU M32 BS O NI 2 G32	0930041222	C.33
KDSU M32 BS O SC 1 G32	0930041211	C.32
KDSU M32 BS O SC 2 G32	0930041212	C.32
KDSU M40 BN O NI 1 G40	1083350000	C.31
KDSU M40 BN O NI 2 G40	1911440000	C.31
KDSU M40 BN O SC 1 G40	1076170000	C.30
KDSU M40 BN O SC 2 G40	1909330000	C.30
KDSU M40 BS O NI 1 G40	1136990000	C.33
KDSU M40 BS O NI 2 G40	0930051222	C.33
KDSU M40 BS O SC 1 G40	1136870000	C.32
KDSU M40 BS O SC 2 G40	0930051212	C.32
KDSU M50 BN O NI 1 G50	1083370000	C.31
KDSU M50 BN O NI 1 G50S	1083360000	C.31
KDSU M50 BN O NI 2 G50	1911460000	C.31
KDSU M50 BN O NI 2 G50S	1911450000	C.31
KDSU M50 BN O SC 1 G50	1076190000	C.30
KDSU M50 BN O SC 1 G50S	1076180000	C.30
KDSU M50 BN O SC 2 G50	1909350000	C.30
KDSU M50 BN O SC 2 G50S	1909340000	C.30
KDSU M50 BS O NI 1 G50	1137010000	C.33
KDSU M50 BS O NI 1 G50S	1137000000	C.33
KDSU M50 BS O NI 2 G50	1137020000	C.33
KDSU M50 BS O NI 2 G50S	0930061224	C.33
KDSU M50 BS O SC 1 G50	1136890000	C.32
KDSU M50 BS O SC 1 G50S	0930061213	C.32
KDSU M50 BS O SC 2 G50	1136910000	C.32
KDSU M50 BS O SC 2 G50S	1136880000	C.32
KDSU M63 BN O NI 1 G63	1083390000	C.31
KDSU M63 BN O NI 1 G63S	1083380000	C.31
KDSU M63 BN O NI 2 G63	1911490000	C.31
KDSU M63 BN O NI 2 G63S	1911480000	C.31
KDSU M63 BN O SC 1 G63	1076210000	C.30
KDSU M63 BN O SC 1 G63S	1076200000	C.30
KDSU M63 BN O SC 2 G63	1909370000	C.30
KDSU M63 BN O SC 2 G63S	1909360000	C.30
KDSU M63 BS O NI 1 G63	1137050000	C.33
KDSU M63 BS O NI 1 G63S	1137030000	C.33
KDSU M63 BS O NI 2 G63	0930091222	C.33
KDSU M63 BS O NI 2 G63S	1137040000	C.33
KDSU M63 BS O SC 1 G63	1136940000	C.32
KDSU M63 BS O SC 1 G63S	1136920000	C.32
KDSU M63 BS O SC 2 G63	1136950000	C.32
KDSU M63 BS O SC 2 G63S	1136930000	C.32
KDSU M75 BN O NI 1 G75	1083420000	C.31
KDSU M75 BN O NI 1 G75S	1083400000	C.31
KDSU M75 BN O NI 2 G75	1083430000	C.31
KDSU M75 BN O NI 2 G75S	1083410000	C.31
KDSU M75 BN O SC 1 G75	1076240000	C.30
KDSU M75 BN O SC 1 G75S	1076220000	C.30
KDSU M75 BN O SC 2 G75	1076260000	C.30
KDSU M75 BN O SC 2 G75S	1076230000	C.30
KDSU M75 BS O NI 1 G75	1137080000	C.33
KDSU M75 BS O NI 1 G75S	1137060000	C.33
KDSU M75 BS O NI 2 G75	1137090000	C.33
KDSU M75 BS O NI 2 G75S	1137070000	C.33
KDSU M75 BS O SC 1 G75	1136980000	C.32
KDSU M75 BS O SC 1 G75S	1136960000	C.32
KDSU M75 BS O SC 2 G75	0930111212	C.32
KDSU M75 BS O SC 2 G75S	1136970000	C.32
KDSW M20 BN L NI 1 G16	1074660000	C.39
KDSW M20 BN L NI 1 G20	1074760000	C.39
KDSW M20 BN L NI 1 G20S	1074720000	C.39
KDSW M20 BN L NI 2 G16	1074690000	C.39
KDSW M20 BN L NI 2 G20	1074780000	C.39
KDSW M20 BN L NI 2 G20S	1074740000	C.39
KDSW M20 BN L SC 1 G16	1076250000	C.38
KDSW M20 BN L SC 1 G20	1076300000	C.38
KDSW M20 BN L SC 1 G20S	1076280000	C.38
KDSW M20 BN L SC 2 G16	1076270000	C.38
KDSW M20 BN L SC 2 G20	1076310000	C.38
KDSW M20 BN L SC 2 G20S	1076290000	C.38
KDSW M20 BN O NI 1 G16	1075030000	C.35
KDSW M20 BN O NI 1 G20	1075070000	C.35
KDSW M20 BN O NI 1 G20S	1075050000	C.35
KDSW M20 BN O NI 2 G16	1075040000	C.35
KDSW M20 BN O NI 2 G20	1075080000	C.35
KDSW M20 BN O NI 2 G20S	1075060000	C.35
KDSW M20 BN O SC 1 G16	1074480000	C.34
KDSW M20 BN O SC 1 G20	1074520000	C.34
KDSW M20 BN O SC 1 G20S	1074500000	C.34
KDSW M20 BN O SC 2 G20	1074530000	C.34
KDSW M20 BN O SC 2 G20S	1074510000	C.34
KDSW M20 BS O NI 1 G16	1136410000	C.37
KDSW M20 BS O NI 1 G20	1136450000	C.37
KDSW M20 BS O NI 1 G20S	1136430000	C.37
KDSW M20 BS O NI 2 G16	1136420000	C.37
KDSW M20 BS O NI 2 G20	1136460000	C.37
KDSW M20 BS O NI 2 G20S	1136440000	C.37
KDSW M20 BS O SC 1 G16	1136160000	C.36
KDSW M20 BS O SC 1 G20	1136200000	C.36
KDSW M20 BS O SC 1 G20S	1136180000	C.36
KDSW M20 BS O SC 2 G16	1136170000	C.36
KDSW M20 BS O SC 2 G20	1136210000	C.36
KDSW M20 BS O SC 2 G20S	1136190000	C.36
KDSW M20BN O SC 2 G16	1074490000	C.34
KDSW M25 BN L NI 1 G25	1074810000	C.39
KDSW M25 BN L NI 2 G25	1074830000	C.39
KDSW M25 BN L SC 1 G25	1076320000	C.38
KDSW M25 BN L SC 2 G25	1076330000	C.38
KDSW M25 BN O NI 1 G25	1075090000	C.35
KDSW M25 BN O NI 2 G25	1075110000	C.35
KDSW M25 BN O SC 1 G25	1074540000	C.34
KDSW M25 BN O SC 2 G25	1074550000	C.34
KDSW M25 BS O NI 1 G25	1136470000	C.37
KDSW M25 BS O NI 2 G25	1136480000	C.37
KDSW M25 BS O SC 1 G25	1136220000	C.36
KDSW M25 BS O SC 2 G25	1136230000	C.36
KDSW M32 BN L NI 1 G32	1074850000	C.39
KDSW M32 BN L NI 2 G32	1074860000	C.39
KDSW M32 BN L SC 1 G32	1076340000	C.38
KDSW M32 BN L SC 2 G32	1076350000	C.38
KDSW M32 BN O NI 1 G32	1075120000	C.35
KDSW M32 BN O NI 2 G32	1075130000	C.35
KDSW M32 BN O SC 1 G32	1074570000	C.34
KDSW M32 BN O SC 2 G32	1074580000	C.34
KDSW M32 BS O NI 1 G32	1136490000	C.37
KDSW M32 BS O NI 2 G32	1136510000	C.37
KDSW M32 BS O SC 1 G32	1136240000	C.36
KDSW M32 BS O SC 2 G32	1136250000	C.36
KDSW M40 BN L NI 1 G40	1074870000	C.39
KDSW M40 BN L NI 2 G40	1074880000	C.39
KDSW M40 BN L SC 1 G40	1076360000	C.38
KDSW M40 BN L SC 2 G40	1076370000	C.38
KDSW M40 BN O NI 1 G40	1075140000	C.35
KDSW M40 BN O NI 2 G40	1075150000	C.35
KDSW M40 BN O SC 1 G40	1074590000	C.34
KDSW M40 BN O SC 2 G40	1074610000	C.34
KDSW M40 BS O NI 1 G40	1136520000	C.37
KDSW M40 BS O NI 2 G40	1136530000	C.37
KDSW M40 BS O SC 1 G40	1136260000	C.36
KDSW M40 BS O SC 2 G40	1136270000	C.36
KDSW M50 BN L NI 1 G50	1074920000	C.39
KDSW M50 BN L NI 1 G50S	1074890000	C.39
KDSW M50 BN L NI 2 G50	1074930000	C.39
KDSW M50 BN L NI 2 G50S	1074910000	C.39
KDSW M50 BN L SC 1 G50	1076400000	C.38
KDSW M50 BN L SC 1 G50S	1076380000	C.38
KDSW M50 BN L SC 2 G50	1076410000	C.38
KDSW M50 BN L SC 2 G50S	1076390000	C.38
KDSW M50 BN O NI 1 G50	1075180000	C.35
KDSW M50 BN O NI 1 G50S	1075160000	C.35
KDSW M50 BN O NI 2 G50	1075190000	C.35
KDSW M50 BN O NI 2 G50S	1075170000	C.35
KDSW M50 BN O SC 1 G50	1074640000	C.34
KDSW M50 BN O SC 1 G50S	1074620000	C.34
KDSW M50 BN O SC 2 G50	1074650000	C.34
KDSW M50 BN O SC 2 G50S	1074630000	C.34
KDSW M50 BS O NI 1 G50	1136560000	C.37
KDSW M50 BS O NI 1 G50S	1136540000	C.37
KDSW M50 BS O NI 2 G50	1136570000	C.37
KDSW M50 BS O NI 2 G50S	1136550000	C.37
KDSW M50 BS O SC 1 G50	1136310000	C.36
KDSW M50 BS O SC 1 G50S	1136280000	C.36
KDSW M50 BS O SC 2 G50	1136320000	C.36
KDSW M50 BS O SC 2 G50S	1136290000	C.36
KDSW M63 BN L NI 1 G63	1074960000	C.39
KDSW M63 BN L NI 1 G63S	1074940000	C.39
KDSW M63 BN L NI 2 G63	1074970000	C.39
KDSW M63 BN L NI 2 G63S	1074950000	C.39
KDSW M63 BN L SC 1 G63	1076440000	C.38
KDSW M63 BN L SC 1 G63S	1076420000	C.38
KDSW M63 BN L SC 2 G63	1076450000	C.38
KDSW M63 BN L SC 2 G63S	1076430000	C.38
KDSW M63 BN O NI 1 G63	1075230000	C.35
KDSW M63 BN O NI 1 G63S	1075210000	C.35
KDSW M63 BN O NI 2 G63	1075240000	C.35
KDSW M63 BN O NI 2 G63S	1075220000	C.35
KDSW M63 BN O SC 1 G63	1074730000	C.34
KDSW M63 BN O SC 1 G63S	1074670000	C.34
KDSW M63 BN O SC 2 G63	1074750000	C.34
KDSW M63 BN O SC 2 G63S	1074710000	C.34
KDSW M63 BS O NI 1 G63	1136600000	C.37
KDSW M63 BS O NI 1 G63S	1136580000	C.37
KDSW M63 BS O NI 2 G63	1136610000	C.37
KDSW M63 BS O NI 2 G63S	1136590000	C.37
KDSW M63 BS O SC 1 G63	1136350000	C.36
KDSW M63 BS O SC 1 G63S	1136330000	C.36
KDSW M63 BS O SC 2 G63	1136360000	C.36
KDSW M63 BS O SC 2 G63S	1136340000	C.36
KDSW M75 BN L NI 1 G75	1075010000	C.39
KDSW M75 BN L NI 1 G75S	1074980000	C.39
KDSW M75 BN L NI 2 G75	1075020000	C.39
KDSW M75 BN L NI 2 G75S	1074990000	C.39
KDSW M75 BN L SC 1 G75	1076480000	C.38
KDSW M75 BN L SC 1 G75S	1076460000	C.38
KDSW M75 BN L SC 2 G75	1076490000	C.38
KDSW M75 BN L SC 2 G75S	1076470000	C.38
KDSW M75 BN O NI 1 G75	1075270000	C.35
KDSW M75 BN O NI 1 G75S	1075250000	C.35
KDSW M75 BN O NI 2 G75	1075280000	C.35
KDSW M75 BN O NI 2 G75S	1075260000	C.35
KDSW M75 BN O SC 1 G75	1074820000	C.34
KDSW M75 BN O SC 1 G75S	1074770000	C.34
KDSW M75 BN O SC 2 G75	1074840000	C.34
KDSW M75 BN O SC 2 G75S	1074790000	C.34
KDSW M75 BS O NI 1 G75	1136640000	C.37
KDSW M75 BS O NI 1 G75S	1136620000	C.37
KDSW M75 BS O NI 2 G75	1136650000	C.37
KDSW M75 BS O NI 2 G75S	1136630000	C.37
KDSW M75 BS O SC 1 G75	1136390000	C.36
KDSW M75 BS O SC 1 G75S	1136370000	C.36
KDSW M75 BS O SC 2 G75	1136400000	C.36
KDSW M75 BS O SC 2 G75S	1136380000	C.36
KDSX M20 BS O NI 1 G16	1135910000	C.41
KDSX M20 BS O NI 1 G20	1135950000	C.41
KDSX M20 BS O NI 1 G20S	1135930000	C.41
KDSX M20 BS O NI 2 G16	1135920000	C.41
KDSX M20 BS O NI 2 G20	1135960000	C.41
KDSX M20 BS O NI 2 G20S	1135940000	C.41
KDSX M20 BS O SC 1 G16	1135650000	C.40
KDSX M20 BS O SC 1 G20	1135690000	C.40
KDSX M20 BS O SC 1 G20S	1135670000	C.40
KDSX M20 BS O SC 2 G16	1135660000	C.40
KDSX M20 BS O SC 2 G20	1135710000	C.40
KDSX M20 BS O SC 2 G20S	1135680000	C.40
KDSX M25 BS O NI 1 G25	1135970000	C.41
KDSX M25 BS O NI 2 G25	1135980000	C.41
KDSX M25 BS O SC 1 G25	1135720000	C.40
KDSX M25 BS O SC 2 G25	1135730000	C.40
KDSX M32 BS O NI 1 G32	1135990000	C.41
KDSX M32 BS O NI 2 G32	1136000000	C.41
KDSX M32 BS O SC 1 G32	1135740000	C.40
KDSX M32 BS O SC 2 G32	1135750000	C.40
KDSX M40 BS O NI 1 G40	1136010000	C.41
KDSX M40 BS O NI 2 G40	1136020000	C.41
KDSX M40 BS O SC 1 G40	1135760000	C.40
KDSX M40 BS O SC 2 G40	1135770000	C.40
KDSX M50 BS O NI 1 G50	1136050000	C.41
KDSX M50 BS O NI 1 G50S	1136030000	C.41
KDSX M50 BS O NI 2 G50	1136060000	C.41
KDSX M50 BS O NI 2 G50S	1136040000	C.41
KDSX M50 BS O SC 1 G50	1135800000	C.40
KDSX M50 BS O SC 1 G50S	1135780000	C.40
KDSX M50 BS O SC 2 G50	1135810000	C.40
KDSX M50 BS O SC 2 G50S	1135790000	C.40
KDSX M63 BS O NI 1 G63	1136090000	C.41
KDSX M63 BS O NI 1 G63S	1136070000	C.41
KDSX M63 BS O NI 2 G63	1136110000	C.41
KDSX M63 BS O NI 2 G63S	1136080000	C.41
KDSX M63 BS O SC 1 G63	1135840000	C.40
KDSX M63 BS O SC 1 G63S	1135820000	C.40
KDSX M63 BS O SC 2 G63	1135850000	C.40
KDSX M63 BS O SC 2 G63S	1135830000	C.40
KDSX M75 BS O NI 1 G75	1136140000	C.41
KDSX M75 BS O NI 1 G75S	1136120000	C.41
KDSX M75 BS O NI 2 G75	1136150000	C.41
KDSX M75 BS O NI 2 G75S	1136130000	C.41
KDSX M75 BS O SC 1 G75	1135880000	C.40
KDSX M75 BS O SC 1 G75S	1135860000	C.40
KDSX M75 BS O SC 2 G75	1135890000	C.40
KDSX M75 BS O SC 2 G75S	1135870000	C.40
KL SET 10A4 S	8000004145	B.184
KL SET 10A4 S	8000004145	B.187
KL SET 12W4 S	8000003444	B.150
KL SET 13A4 S	8000004134	B.156
KL SET 14Z2.5 S	8000004133	B.156
KL SET 15Z4 S	8000004141	B.161
KL SET 18A4 S	8000004146	B.184
KL SET 18A4 S	8000004146	B.188
KL SET 18W4 S	8000004140	B.161
KL SET 21A4 S	8000004137	B.158
KL SET 24Z2.5 S	8000004136	B.158
KL SET 32W4 S	8000004142	B.150
KL SET 38Z2.5 S	8000004143	B.162
KL SET 38Z2.5 S	8000004143	B.184
KL SET 38Z2.5 S	8000004143	B.190
KL SET 4Z4 S	8000004139	B.159
KL SET 5A4 S	8000004131	B.154
KL SET 5W4 S	8000004138	B.159
KL SET 5Z2.5 S	8000004130	B.154
KL SET 6A4 S	8000004144	B.184
KL SET 6A4 S	8000004144	B.186
KL SET 9Z4 S	8000003445	B.150
KL SET KLIPPON POK1 BK4	8000004365	B.184
KL SET KLIPPON POK1 BK4	8000004365	B.186
KL SET KLIPPON POK2 BK6	8000004366	B.184
KL SET KLIPPON POK2 BK6	8000004366	B.187
KL SET KLIPPON POK3BK12	8000004367	B.184
KL SET KLIPPON POK3BK12	8000004367	B.188
KLIPPON BDX M20 B	1292540000	C.73
KLIPPON BDX M20 S	1292530000	C.73
KLIPPON BDX M20X15 S	1344630000	C.73
KLIPPON COPL 080806	1390910000	B.166
KLIPPON COPL 081106	1390920000	B.167
KLIPPON COPL 081606	1390930000	B.168
KLIPPON COPL 081906	1390940000	B.169
KLIPPON COPL 082306	1390950000	B.170
KLIPPON COPL 121209	1390970000	B.171
KLIPPON COPL 122209	1390980000	B.172
KLIPPON COPL 161609	1390990000	B.173
KLIPPON COPL 162609	1391000000	B.174
KLIPPON COPL 163609	1391010000	B.175
KLIPPON COPL 165609	1391020000	B.176
KLIPPON COPL 252512/16	1391030000	B.177
KLIPPON COPL 252512/16	1391030000	B.181
KLIPPON COPL 254012/16	1391040000	B.178
KLIPPON COPL 254012/16	1391040000	B.182
KLIPPON COPL 256012	1391050000	B.179
KLIPPON COPL 404012	1391070000	B.180
KLIPPON K MF KIT 16	9529080000	B.142
KLIPPON K MF KIT 25	9527590000	B.141
KLIPPON K0	0573200000	B.130
KLIPPON K0 RAL7001	9529090000	B.130
KLIPPON K0 VMQ RAL7001	1937920000	B.130
KLIPPON K01	1565240000	B.131
KLIPPON K01	1565240000	B.150
KLIPPON K01 1M16AB CSS	8000004184	B.152
KLIPPON K01 RAL7001	9529100000	B.131
KLIPPON K01 VMQ RAL7001	1937850000	B.131
KLIPPON K02	1565250000	B.132
KLIPPON K02 RAL7001	9529110000	B.132
KLIPPON K02 VMQ RAL7001	1937840000	B.132
KLIPPON K1	0342000000	B.133
KLIPPON K1 1,5M16AB CSS	8000004147	B.153
KLIPPON K1 1M20AB CSS	8000004148	B.153
KLIPPON K1 EX	9526840000	B.133
KLIPPON K1 M16BCSS EX	8000004202	B.153
KLIPPON K1 M20BCSS EX	8000004203	B.153
KLIPPON K1 RAL7001	9529120000	B.133
KLIPPON K1 VMQ RAL7001	1937630000	B.133
KLIPPON K11	0573300000	B.134
KLIPPON K11 2M16AB CSS	8000004149	B.154
KLIPPON K11 2M20AB CSS	8000004150	B.154
KLIPPON K11 EX	9526850000	B.134
KLIPPON K11 M16ACSS EX	8000004207	B.154
KLIPPON K11 M16ZCSS EX	8000004204	B.154
KLIPPON K11 M20ACSS EX	8000004209	B.154
KLIPPON K11 M20ZCSS EX	8000004208	B.154
KLIPPON K11 RAL7001	9529130000	B.134
KLIPPON K11 VMQ RAL7001	1937910000	B.134
KLIPPON K2	0342100000	B.135
KLIPPON K2 2M20AB CSS	8000004151	B.155
KLIPPON K2 EX	9526860000	B.135
KLIPPON K2 M20BCSS EX	8000004210	B.155
KLIPPON K2 RAL7001	9529140000	B.135
KLIPPON K2 VMQ RAL7001	1937930000	B.135
KLIPPON K21	0573400000	B.136
KLIPPON K21 3M16AB CSS	8000004152	B.156
KLIPPON K21 EX	9526870000	B.136
KLIPPON K21 M16ACSS EX	8000004212	B.156
KLIPPON K21 M16ZCSS EX	8000004211	B.156
KLIPPON K21 RAL7001	9529150000	B.136
KLIPPON K21 VMQ RAL7001	1937830000	B.136
KLIPPON K3	0342200000	B.137
KLIPPON K3 4M20AB CSS	8000004153	B.157
KLIPPON K3 EX	9526880000	B.137
KLIPPON K3 M20BCSS EX	8000004213	B.157
KLIPPON K3 RAL7001	9529160000	B.137

Type	Order No.	Page
KLIPPON K3 VMQ RAL7001	1937900000	B.137
KLIPPON K31	0573500000	B.138
KLIPPON K31 4M20AB CSS	8000004154	B.158
KLIPPON K31 EX	9526890000	B.138
KLIPPON K31 M20ACSS EX	8000004215	B.158
KLIPPON K31 M20ZCSS EX	8000004214	B.158
KLIPPON K31 RAL7001	9529170000	B.138
KLIPPON K31 VMQ RAL7001	1937820000	B.138
KLIPPON K32	1565260000	B.139
KLIPPON K32 EX	9526900000	B.139
KLIPPON K32 RAL7001	9529180000	B.139
KLIPPON K32 VMQ RAL7001	1937810000	B.139
KLIPPON K4	0342300000	B.140
KLIPPON K4 2M20AB CSS	8000004155	B.159
KLIPPON K4 EX	9526910000	B.140
KLIPPON K4 M20WCSS EX	8000004216	B.159
KLIPPON K4 M20ZCSS EX	8000004217	B.159
KLIPPON K4 RAL7001	9529190000	B.140
KLIPPON K4 VMQ RAL7001	1937890000	B.140
KLIPPON K41	1565270000	B.141
KLIPPON K41	1565270000	B.150
KLIPPON K41 2M25AB CSS	8000003446	B.160
KLIPPON K41 3M20AB CSS	8000003447	B.160
KLIPPON K41 EX	9526920000	B.141
KLIPPON K41 M20WCSS EX	8000003591	B.160
KLIPPON K41 M20ZCSS EX	8000003592	B.160
KLIPPON K41 M25WCSS EX	8000003589	B.160
KLIPPON K41 M25ZCSS EX	8000003590	B.160
KLIPPON K41 RAL7001	9529200000	B.141
KLIPPON K41 VMQ RAL7001	1937800000	B.141
KLIPPON K5	0342400000	B.142
KLIPPON K5 4M20AB CSS	8000004158	B.161
KLIPPON K5 4M20WCSS EX	8000004218	B.161
KLIPPON K5 4M20ZCSS EX	8000004219	B.161
KLIPPON K5 EX	9526930000	B.142
KLIPPON K5 RAL7001	9529210000	B.142
KLIPPON K5 VMQ RAL7001	1937860000	B.142
KLIPPON K51	1565280000	B.143
KLIPPON K51 EX	9526940000	B.143
KLIPPON K51 RAL7001	9529220000	B.143
KLIPPON K51 VMQ RAL7001	1937750000	B.143
KLIPPON K52	1565290000	B.144
KLIPPON K52	1565290000	B.150
KLIPPON K52 4M20AB CSS	8000004159	B.162
KLIPPON K52 EX	9526950000	B.144
KLIPPON K52 M20WCSS EX	8000004220	B.162
KLIPPON K52 M20ZCSS EX	8000004221	B.162
KLIPPON K52 RAL7001	9529230000	B.144
KLIPPON K52 VMQ RAL7001	1937740000	B.144
KLIPPON K6	0342500000	B.145
KLIPPON K6 EX	9526960000	B.145
KLIPPON K6 RAL7001	9529240000	B.145
KLIPPON K6 VMQ RAL7001	1937870000	B.145
KLIPPON K61	0573600000	B.146
KLIPPON K61 EX	9526970000	B.146
KLIPPON K61 RAL7001	9529250000	B.146
KLIPPON K61 VMQ RAL7001	1937730000	B.146
KLIPPON K7	0342600000	B.147
KLIPPON K7 EX	9526980000	B.147
KLIPPON K7 RAL7001	9529260000	B.147
KLIPPON K7 VMQ RAL7001	1937880000	B.147
KLIPPON K71	0573700000	B.148
KLIPPON K71 EX	9526990000	B.148
KLIPPON K71 RAL7001	9529270000	B.148
KLIPPON K71 VMQ RAL7001	1937720000	B.148
Klippon POK 1	1277200000	B.166
Klippon POK 1 Ex	9510210000	B.166
Klippon POK 10	1565440000	B.180
Klippon POK 10 Ex	9510310000	B.180
Klippon POK 11	9510530000	B.181
Klippon POK 11 Ex	9510360000	B.181
Klippon POK 12	9510540000	B.182
Klippon POK 12 Ex	9510370000	B.182
Klippon POK 2	1277300000	B.167
Klippon POK 2 Ex	9510220000	B.167
Klippon POK 3	1277400000	B.168
Klippon POK 3 Ex	9510320000	B.168
Klippon POK 31 Ex	9510330000	B.169
Klippon POK 32	9510510000	B.170
Klippon POK 32 Ex	9510340000	B.170
Klippon POK 4	1277500000	B.171
Klippon POK 4 Ex	9510230000	B.171
Klippon POK 5	1277600000	B.172
Klippon POK 5 Ex	9510240000	B.172
Klippon POK 51	1565410000	B.173
Klippon POK 51	1565410000	B.184
Klippon POK 51 Ex	9510250000	B.173
Klippon POK 6	1277700000	B.174
Klippon POK 6 Ex	9510260000	B.174
Klippon POK 7	1277800000	B.175
Klippon POK 7 Ex	9510270000	B.175
Klippon POK 71	9510520000	B.176
Klippon POK 71 Ex	9510350000	B.176
Klippon POK 8	1565420000	B.177
Klippon POK 8 Ex	9510280000	B.177
Klippon POK 9	1565430000	B.178
Klippon POK 9 Ex	9510290000	B.178
Klippon POK 91	9510470000	B.179
Klippon POK 91 Ex	9510300000	B.179

Type	Order No.	Page
KLIPPON POK1 2M16AB CSS	8000004160	B.184
KLIPPON POK1 2M16AB CSS	8000004160	B.186
KLIPPON POK1 M16ACSS EX	8000004223	B.184
KLIPPON POK1 M16ACSS EX	8000004223	B.186
KLIPPON POK1 M16BCSS EX	8000004222	B.184
KLIPPON POK1 M16BCSS EX	8000004222	B.186
KLIPPON POK2 2M20AB CSS	8000004161	B.184
KLIPPON POK2 2M20AB CSS	8000004161	B.187
KLIPPON POK2 M20ACSS EX	8000004225	B.184
KLIPPON POK2 M20ACSS EX	8000004225	B.187
KLIPPON POK2 M20BCSS EX	8000004224	B.184
KLIPPON POK2 M20BCSS EX	8000004224	B.187
KLIPPON POK3 4M20AB CSS	8000004162	B.184
KLIPPON POK3 4M20AB CSS	8000004162	B.188
KLIPPON POK3 M20ACSS EX	8000004228	B.184
KLIPPON POK3 M20ACSS EX	8000004228	B.188
KLIPPON POK3 M20BCSS EX	8000004226	B.184
KLIPPON POK3 M20BCSS EX	8000004226	B.188
Klippon POK31	1565400000	B.169
KLIPPON POK4 3M20AB CSS	8000003448	B.184
KLIPPON POK4 3M20AB CSS	8000003448	B.189
KLIPPON POK4 M20WCSS EX	8000003593	B.184
KLIPPON POK4 M20WCSS EX	8000003593	B.189
KLIPPON POK4 M20ZCSS EX	8000003594	B.184
KLIPPON POK4 M20ZCSS EX	8000003594	B.189
KLIPPON POK51 4M20ABCSS	8000004164	B.184
KLIPPON POK51 4M20ABCSS	8000004164	B.190
KLIPPON POK51 M20WCSS E	8000004229	B.184
KLIPPON POK51 M20WCSS E	8000004229	B.190
KLIPPON POK51 M20ZCSS E	8000004230	B.184
KLIPPON POK51 M20ZCSS E	8000004230	B.190
KLIPPON STB 1 MS HT	1024970000	B.120
KLIPPON STB 1 SS	1002690000	B.120
KLIPPON STB 1 SS E	1058810000	B.120
KLIPPON STB 1.1 MS HT	1024980000	B.121
KLIPPON STB 1.1 SS	1002750000	B.121
KLIPPON STB 1.1 SS E	1058820000	B.121
KLIPPON STB 2 MS HT	1024990000	B.122
KLIPPON STB 2 SS	1002740000	B.122
KLIPPON STB 2 SS E	1058830000	B.122
KLIPPON STB 2.1 MS HT	1025010000	B.123
KLIPPON STB 2.1 SS	1002730000	B.123
KLIPPON STB 2.1 SS E	1058840000	B.123
KLIPPON STB 3 MS HT	1025020000	B.124
KLIPPON STB 3 SS	1002720000	B.124
KLIPPON STB 3 SS E	1058850000	B.124
KLIPPON STB 4 MS HT	1025030000	B.125
KLIPPON STB 4 SS	1002710000	B.125
KLIPPON STB 4 SS E	1058860000	B.125
KLIPPON STB 5 MS HT	1025040000	B.126
KLIPPON STB 5 SS	1002700000	B.126
KLIPPON STB 5 SS E	1058880000	B.126
KLIPPON STB 6 MS HT	1025050000	B.127
KLIPPON STB 6 SS	1002760000	B.127
KLIPPON STB 6 SS E	1058870000	B.127
KOBBS 19X55	9205040000	E.4
KOBBS 19X75	9204780000	E.4
KOBBS 9.5X50	9205030000	E.4
KOHS 19	9205010000	E.4
KOHS 9.5+19	9205000000	E.4
KOK-112X36	9204870000	E.6
KOK-46X46	9204810000	E.6
KOK-52X36	9204820000	E.6
KOK-65X36	9204830000	E.6
KOK-68X68	9204840000	E.6
KOK-86X36	9204850000	E.6
KOK-91X36	9204860000	E.6
KOPD 10.0	9205020000	E.5
KOS PG 13/M20	9204950000	E.4
KOS-M16	9204880000	E.4
KOS-M25	9204900000	E.4
KOS-M32	9204910000	E.4
KOS-M40	9204920000	E.4
KOS-PG11	9204940000	E.4
KOS-PG16	9204960000	E.4
KOS-PG21	9204970000	E.4
KOS-PG29	9204980000	E.4
KOS-PG36	9204990000	E.4
KOS-PG9	9204930000	E.4
KSG M20 BN O NI 2 G16	1911510000	C.42
KSG M20 BN O NI 2 G20	1911560000	C.42
KSG M20 BN O NI 2 G20S	1911540000	C.42
KSG M20 BN O SC 2 G16	1909380000	C.42
KSG M20 BN O SC 2 G20	1909410000	C.42
KSG M20 BN O SC 2 G20S	1909400000	C.42
KSG M20 BS O NI 2 G16	0930481222	C.43
KSG M20 BS O NI 2 G20	0930501222	C.43
KSG M20 BS O NI 2 G20S	0930491224	C.43
KSG M20 BS O SC 2 G16	0930481212	C.43
KSG M20 BS O SC 2 G20	0930501212	C.43
KSG M20 BS O SC 2 G20S	1136720000	C.43
KSG M25 BN O NI 2 G25	1911570000	C.42
KSG M25 BN O SC 2 G25	1909420000	C.42
KSG M25 BS O NI 2 G25	0930511222	C.43
KSG M25 BS O SC 2 G25	0930511212	C.43
KSG M32 BN O NI 2 G32	1911580000	C.42
KSG M32 BN O SC 2 G32	1909430000	C.42
KSG M32 BS O NI 2 G32	0930521222	C.43
KSG M32 BS O SC 2 G32	0930521212	C.43

Type	Order No.	Page
KSG M40 BN O NI 2 G40	1911590000	C.42
KSG M40 BN O SC 2 G40	1909440000	C.42
KSG M40 BS O NI 2 G40	0930531222	C.43
KSG M40 BS O SC 2 G40	0930531212	C.43
KSG M50 BN O NI 2 G50	1911610000	C.42
KSG M50 BN O NI 2 G50S	1911600000	C.42
KSG M50 BN O SC 2 G50	1909460000	C.42
KSG M50 BN O SC 2 G50S	1909450000	C.42
KSG M50 BS O NI 2 G50	1136670000	C.43
KSG M50 BS O NI 2 G50S	1136660000	C.43
KSG M50 BS O SC 2 G50	0930551212	C.43
KSG M50 BS O SC 2 G50S	1136730000	C.43
KSG M63 BN O NI 2 G63	1911630000	C.42
KSG M63 BN O NI 2 G63S	1911620000	C.42
KSG M63 BN O SC 2 G63	1909480000	C.42
KSG M63 BN O SC 2 G63S	1909470000	C.42
KSG M63 BS O NI 2 G63	1136690000	C.43
KSG M63 BS O NI 2 G63S	1136680000	C.43
KSG M63 BS O SC 2 G63	1136750000	C.43
KSG M63 BS O SC 2 G63S	1136740000	C.43
KSG M75 BN O NI 2 G75	1075360000	C.42
KSG M75 BN O NI 2 G75S	1075350000	C.42
KSG M75 BN O SC 2 G75	1075340000	C.42
KSG M75 BN O SC 2 G75S	1075330000	C.42
KSG M75 BS O NI 2 G75	1136710000	C.43
KSG M75 BS O NI 2 G75S	1136700000	C.43
KSG M75 BS O SC 2 G75	1136770000	C.43
KSG M75 BS O SC 2 G75S	1136760000	C.43
KSP EL30	1736670000	C.57
KSP EL38	1736680000	C.57
KSP EL46	1076750000	C.57
KSP EL55	1076760000	C.57
KSP EL65	1076770000	C.57
KSP EL80	1076780000	C.57
KSP EL90	1076790000	C.57
KSP L 104 S	1193940000	C.58
KSP L114 S	1192790000	C.58
KSP L24	1736570000	C.57
KSP L24 S	0930700001	C.58
KSP L30	1736580000	C.57
KSP L30 S	0930700002	C.58
KSP L38	1736590000	C.57
KSP L38 S	0930700003	C.58
KSP L46	1736600000	C.57
KSP L46 S	0930700004	C.58
KSP L55	1736610000	C.57
KSP L55 S	0930700005	C.58
KSP L65	1736620000	C.57
KSP L65 S	0930700006	C.58
KSP L80	1736630000	C.57
KSP L80 S	0930700007	C.58
KSP L90	1736640000	C.57
KSP L90 S	0930700008	C.58
KSPA M16 BNI	0887490000	C.64
KSPA M20 BNI	0886670000	C.64
KSPA M25 BNI	0886680000	C.64
KSPA M32 BNI	0886690000	C.64
KSPA M40 BNI	0886700000	C.64
KSPA M50 BNI	0886710000	C.64
KSPA M63 BNI	1075370000	C.64
KSPA M75 BNI	1075380000	C.64
KSPM M16 BSC	0887480000	C.65
KSPM M16 PL	1209890000	C.66
KSPM M16 SSC	0887500000	C.65
KSPM M20 BSC	0885410000	C.65
KSPM M20 PL	1209910000	C.66
KSPM M20 SSC	0886720000	C.65
KSPM M25 BSC	0885420000	C.65
KSPM M25 PL	1209920000	C.66
KSPM M25 SSC	0886730000	C.65
KSPM M32 BSC	0885430000	C.65
KSPM M32 PL	1209930000	C.66
KSPM M32 SSC	0886740000	C.65
KSPM M40 BSC	0885440000	C.65
KSPM M40 PL	1209940000	C.66
KSPM M40 SSC	0886750000	C.65
KSPM M50 BSC	0885450000	C.65
KSPM M50 PL	1209950000	C.66
KSPM M50 SSC	1075510000	C.65
KSPM M63 BSC	1075480000	C.65
KSPM M63 SSC	1075520000	C.65
KSPM M75 BSC	1075490000	C.65
KSPM M75 SSC	1075530000	C.65
KSWF M16	1076680000	C.54
KSWF M20	0899750000	C.54
KSWF M25	0899770000	C.54
KSWF M32	1076690000	C.54
KSWF M40	1076710000	C.54
KSWF M50	1076720000	C.54
KSWF M63	1076730000	C.54
KSWF M75	1076740000	C.54
KSWF M90	1192820000	C.54
KSWN M16	1076630000	C.53
KSWN M20	0930730002	C.53
KSWN M25	1076640000	C.53
KSWN M32	1076650000	C.53
KSWN M40	0899780000	C.53
KSWN M50	0900660000	C.53
KSWN M63	1076660000	C.53

Type	Order No.	Page
KSWN M75	1076670000	C.53
KTB FS 221513 S4E1	1195660000	B.67
KTB FS 221513 S4E2	1195670000	B.67
KTB FS 221513 S4E3	1195680000	B.67
KTB FS 221513 S4E4	1195690000	B.67
KTB FS 262615 S4E1	1195710000	B.68
KTB FS 262615 S4E2	1195720000	B.68
KTB FS 262615 S4E3	1195730000	B.68
KTB FS 262615 S4E4	1195740000	B.68
KTB FS 262620 S4E1	1195760000	B.69
KTB FS 262620 S4E2	1195770000	B.69
KTB FS 262620 S4E3	1195780000	B.69
KTB FS 262620 S4E4	1195790000	B.69
KTB FS 303015 S4E1	1195810000	B.70
KTB FS 303015 S4E2	1195820000	B.70
KTB FS 303015 S4E3	1195830000	B.70
KTB FS 303015 S4E4	1195840000	B.70
KTB FS 303020 S4E1	1195860000	B.71
KTB FS 303020 S4E2	1195870000	B.71
KTB FS 303020 S4E3	1195880000	B.71
KTB FS 303020 S4E4	1195890000	B.71
KTB FS 352615 S4E1	1195910000	B.72
KTB FS 352615 S4E2	1195920000	B.72
KTB FS 352615 S4E3	1195930000	B.72
KTB FS 352615 S4E4	1195940000	B.72
KTB FS 352620 S4E1	1195960000	B.73
KTB FS 352620 S4E2	1195970000	B.73
KTB FS 352620 S4E3	1195980000	B.73
KTB FS 352620 S4E4	1195990000	B.73
KTB FS 403015 S4E1	1196010000	B.74
KTB FS 403015 S4E2	1196020000	B.74
KTB FS 403015 S4E3	1196030000	B.74
KTB FS 403015 S4E4	1196040000	B.74
KTB FS 403020 S4E1	1196060000	B.75
KTB FS 403020 S4E2	1196070000	B.75
KTB FS 403020 S4E3	1196080000	B.75
KTB FS 403020 S4E4	1196090000	B.75
KTB FS 453815 S4E1	1196110000	B.76
KTB FS 453815 S4E2	1196120000	B.76
KTB FS 453815 S4E3	1196130000	B.76
KTB FS 453815 S4E4	1196140000	B.76
KTB FS 453820 S4E1	1196160000	B.77
KTB FS 453820 S4E2	1196170000	B.77
KTB FS 453820 S4E3	1196180000	B.77
KTB FS 453820 S4E4	1196190000	B.77
KTB FS 484815 S4E1	1196210000	B.78
KTB FS 484815 S4E2	1196220000	B.78
KTB FS 484815 S4E3	1196230000	B.78
KTB FS 484815 S4E4	1196240000	B.78
KTB FS 484820 S4E1	1196260000	B.79
KTB FS 484820 S4E2	1196270000	B.79
KTB FS 484820 S4E3	1196280000	B.79
KTB FS 484820 S4E4	1196290000	B.79
KTB FS 553515 S4E1	1196310000	B.80
KTB FS 553515 S4E2	1196320000	B.80
KTB FS 553515 S4E3	1196330000	B.80
KTB FS 553515 S4E4	1196340000	B.80
KTB FS 553520 S4E1	1196360000	B.81
KTB FS 553520 S4E2	1196370000	B.81
KTB FS 553520 S4E3	1196380000	B.81
KTB FS 553520 S4E4	1196390000	B.81
KTB FS 624515 S4E1	1196410000	B.82
KTB FS 624515 S4E2	1196420000	B.82
KTB FS 624515 S4E3	1196430000	B.82
KTB FS 624515 S4E4	1196440000	B.82
KTB FS 624520 S4E1	1196460000	B.83
KTB FS 624520 S4E2	1196470000	B.83
KTB FS 624520 S4E3	1196480000	B.83
KTB FS 624520 S4E4	1196490000	B.83
KTB FS 765015 S4E1	1196510000	B.84
KTB FS 765015 S4E2	1196520000	B.84
KTB FS 765015 S4E3	1196530000	B.84
KTB FS 765015 S4E4	1196540000	B.84
KTB FS 765020 S4E1	1196560000	B.85
KTB FS 765020 S4E2	1196570000	B.85
KTB FS 765020 S4E3	1196580000	B.85
KTB FS 765020 S4E4	1196590000	B.85
KTB FS 916115 S4E1	1196610000	B.86
KTB FS 916115 S4E2	1196620000	B.86
KTB FS 916115 S4E3	1196630000	B.86
KTB FS 916115 S4E4	1196640000	B.86
KTB FS 916120 S4E1	1196660000	B.87
KTB FS 916120 S4E2	1196670000	B.87
KTB FS 916120 S4E3	1196680000	B.87
KTB FS 916120 S4E4	1196690000	B.87
KTB FS 987420 S4E1	1196710000	B.88
KTB FS 987420 S4E2	1196720000	B.88
KTB FS 987420 S4E3	1196730000	B.88
KTB FS 987420 S4E4	1196740000	B.88
KTB GP 221513 AB S4 6MM	1256270000	B.15
KTB GP 221513 CD S4 6MM	1256280000	B.15
KTB GP 262615 AB S4 6MM	1256290000	B.16
KTB GP 262615 CD S4 6MM	1256310000	B.16
KTB GP 262620 AB S4 6MM	1256320000	B.17
KTB GP 262620 CD S4 6MM	1256330000	B.17
KTB GP 303015 AB S4 6MM	1256340000	B.18
KTB GP 303015 CD S4 6MM	1256350000	B.18
KTB GP 303020 AB S4 6MM	1256360000	B.19
KTB GP 303020 CD S4 6MM	1256370000	B.19

Type	Order No.	Page
KTB GP 352615 AB S4 6MM	1256380000	B.20
KTB GP 352615 CD S4 6MM	1256390000	B.20
KTB GP 352620 AB S4 6MM	1256410000	B.21
KTB GP 352620 CD S4 6MM	1256420000	B.21
KTB GP 403015 AB S4 6MM	1256430000	B.22
KTB GP 403015 CD S4 6MM	1256440000	B.22
KTB GP 403020 AB S4 6MM	1256450000	B.23
KTB GP 403020 CD S4 6MM	1256470000	B.23
KTB GP 453815 AB S4 6MM	1256480000	B.24
KTB GP 453815 CD S4 6MM	1256490000	B.24
KTB GP 453820 AB S4 6MM	1256510000	B.25
KTB GP 453820 CD S4 6MM	1256520000	B.25
KTB GP 484815 AB S4 6MM	1256530000	B.26
KTB GP 484815 CD S4 6MM	1256540000	B.26
KTB GP 484820 AB S4 6MM	1256550000	B.27
KTB GP 484820 CD S4 6MM	1256560000	B.27
KTB GP 553515 AB S4 6MM	1256570000	B.28
KTB GP 553515 CD S4 6MM	1256580000	B.28
KTB GP 553520 AB S4 6MM	1256590000	B.29
KTB GP 553520 CD S4 6MM	1256610000	B.29
KTB GP 624515 AB S4 6MM	1256620000	B.30
KTB GP 624515 CD S4 6MM	1256630000	B.30
KTB GP 624520 AB S4 6MM	1256640000	B.31
KTB GP 624520 CD S4 6MM	1256650000	B.31
KTB GP 765015 AB S4 6MM	1256660000	B.32
KTB GP 765015 CD S4 6MM	1256670000	B.32
KTB GP 765020 AB S4 6MM	1256680000	B.33
KTB GP 765020 CD S4 6MM	1256690000	B.33
KTB GP 916115 AB S4 6MM	1256710000	B.34
KTB GP 916115 CD S4 6MM	1256720000	B.34
KTB GP 916120 AB S4 6MM	1256730000	B.35
KTB GP 916120 CD S4 6MM	1256740000	B.35
KTB GP 987420 AB S4 6MM	1256750000	B.36
KTB GP 987420 CD S4 6MM	1256760000	B.36
KTB MH 221513 S4E1	1194560000	B.15
KTB MH 221513 S4E2	1194570000	B.15
KTB MH 221513 S4E3	1194580000	B.15
KTB MH 221513 S4E4	1194590000	B.15
KTB MH 262615 S4E1	1194610000	B.16
KTB MH 262615 S4E2	1194620000	B.16
KTB MH 262615 S4E3	1194630000	B.16
KTB MH 262615 S4E4	1194640000	B.16
KTB MH 262620 S4E1	1194660000	B.17
KTB MH 262620 S4E2	1194670000	B.17
KTB MH 262620 S4E3	1194680000	B.17
KTB MH 262620 S4E4	1194690000	B.17
KTB MH 303015 S4E1	1194710000	B.18
KTB MH 303015 S4E2	1194720000	B.18
KTB MH 303015 S4E3	1194730000	B.18
KTB MH 303015 S4E4	1194740000	B.18
KTB MH 303020 S4E1	1194760000	B.19
KTB MH 303020 S4E2	1194770000	B.19
KTB MH 303020 S4E3	1194780000	B.19
KTB MH 303020 S4E4	1194790000	B.19
KTB MH 352615 S4E1	1194810000	B.20
KTB MH 352615 S4E2	1194820000	B.20
KTB MH 352615 S4E3	1194830000	B.20
KTB MH 352615 S4E4	1194840000	B.20
KTB MH 352620 S4E1	1194860000	B.21
KTB MH 352620 S4E2	1194870000	B.21
KTB MH 352620 S4E3	1194880000	B.21
KTB MH 352620 S4E4	1194890000	B.21
KTB MH 403015 S4E1	1194910000	B.22
KTB MH 403015 S4E2	1194920000	B.22
KTB MH 403015 S4E3	1194930000	B.22
KTB MH 403015 S4E4	1194940000	B.22
KTB MH 403020 S4E1	1194960000	B.23
KTB MH 403020 S4E2	1194970000	B.23
KTB MH 403020 S4E3	1194980000	B.23
KTB MH 403020 S4E4	1194990000	B.23
KTB MH 453815 S4E1	1195010000	B.24
KTB MH 453815 S4E2	1195020000	B.24
KTB MH 453815 S4E3	1195030000	B.24
KTB MH 453815 S4E4	1195040000	B.24
KTB MH 453820 S4E1	1195060000	B.25
KTB MH 453820 S4E2	1195070000	B.25
KTB MH 453820 S4E3	1195080000	B.25
KTB MH 453820 S4E4	1195090000	B.25
KTB MH 484815 S4E1	1195110000	B.26
KTB MH 484815 S4E2	1195120000	B.26
KTB MH 484815 S4E3	1195130000	B.26
KTB MH 484815 S4E4	1195140000	B.26
KTB MH 484820 S4E1	1195160000	B.27
KTB MH 484820 S4E2	1195170000	B.27
KTB MH 484820 S4E3	1195180000	B.27
KTB MH 484820 S4E4	1195190000	B.27
KTB MH 553515 S4E1	1195210000	B.28
KTB MH 553515 S4E2	1195220000	B.28
KTB MH 553515 S4E3	1195230000	B.28
KTB MH 553515 S4E4	1195240000	B.28
KTB MH 553520 S4E1	1195260000	B.29
KTB MH 553520 S4E2	1195270000	B.29
KTB MH 553520 S4E3	1195280000	B.29
KTB MH 553520 S4E4	1195290000	B.29
KTB MH 624515 S4E1	1195310000	B.30
KTB MH 624515 S4E2	1195320000	B.30
KTB MH 624515 S4E3	1195330000	B.30
KTB MH 624515 S4E4	1195340000	B.30
KTB MH 624520 S4E1	1195360000	B.31
KTB MH 624520 S4E2	1195370000	B.31
KTB MH 624520 S4E3	1195380000	B.31
KTB MH 624520 S4E4	1195390000	B.31
KTB MH 765015 S4E1	1195410000	B.32
KTB MH 765015 S4E2	1195420000	B.32
KTB MH 765015 S4E3	1195430000	B.32
KTB MH 765015 S4E4	1195440000	B.32
KTB MH 765020 S4E1	1195460000	B.33
KTB MH 765020 S4E2	1195470000	B.33
KTB MH 765020 S4E3	1195480000	B.33
KTB MH 765020 S4E4	1195490000	B.33
KTB MH 916115 S4E1	1195510000	B.34
KTB MH 916115 S4E2	1195520000	B.34
KTB MH 916115 S4E3	1195530000	B.34
KTB MH 916115 S4E4	1195540000	B.34
KTB MH 916120 S4E1	1195560000	B.35
KTB MH 916120 S4E2	1195570000	B.35
KTB MH 916120 S4E3	1195580000	B.35
KTB MH 916120 S4E4	1195590000	B.35
KTB MH 987420 S4E1	1195610000	B.36
KTB MH 987420 S4E2	1195620000	B.36
KTB MH 987420 S4E3	1195630000	B.36
KTB MH 987420 S4E4	1195640000	B.36
KTB MOPL 2215 MSZN	1193930000	B.15
KTB MOPL 2215 S2N	1193810000	B.15
KTB MOPL 2215 S2N H	1257650000	B.15
KTB MOPL 2626 MSZN	1193950000	B.16
KTB MOPL 2626 S2N	1193820000	B.16
KTB MOPL 2626 S2N H	1257660000	B.16
KTB MOPL 3030 MSZN	1193960000	B.18
KTB MOPL 3030 S2N	1193830000	B.18
KTB MOPL 3030 S2N H	1257670000	B.18
KTB MOPL 3526 MSZN	1193970000	B.20
KTB MOPL 3526 S2N	1193840000	B.20
KTB MOPL 3526 S2N H	1257680000	B.20
KTB MOPL 4030 MSZN	1193980000	B.22
KTB MOPL 4030 S2N	1193850000	B.22
KTB MOPL 4030 S2N H	1257690000	B.22
KTB MOPL 4538 MSZN	1193990000	B.24
KTB MOPL 4538 S2N	1193860000	B.24
KTB MOPL 4538 S2N H	1257700000	B.24
KTB MOPL 4848 MSZN	1194000000	B.26
KTB MOPL 4848 S2N	1193870000	B.26
KTB MOPL 4848 S2N H	1257710000	B.26
KTB MOPL 5535 MSZN	1194010000	B.28
KTB MOPL 5535 S2N	1193880000	B.28
KTB MOPL 5535 S2N H	1257720000	B.28
KTB MOPL 6245 MSZN	1194020000	B.30
KTB MOPL 6245 S2N	1193890000	B.30
KTB MOPL 6245 S2N H	1257740000	B.30
KTB MOPL 7650 MSZN	1194030000	B.32
KTB MOPL 7650 S2N	1193900000	B.32
KTB MOPL 7650 S2N H	1257750000	B.32
KTB MOPL 9161 MSZN	1194040000	B.34
KTB MOPL 9161 S2N	1193910000	B.34
KTB MOPL 9161 S2N H	1257760000	B.34
KTB MOPL 9874 MSZN	1194050000	B.36
KTB MOPL 9874 S2N	1193920000	B.36
KTB MOPL 9874 S2N H	1257770000	B.36
KTB QL 221513 S4E1	1199860000	B.41
KTB QL 221513 S4E2	1199870000	B.41
KTB QL 221513 S4E3	1199880000	B.41
KTB QL 221513 S4E4	1199890000	B.41
KTB QL 262615 S4E1	1199910000	B.42
KTB QL 262615 S4E2	1199920000	B.42
KTB QL 262615 S4E3	1199930000	B.42
KTB QL 262615 S4E4	1199940000	B.42
KTB QL 262620 S4E1	1199960000	B.43
KTB QL 262620 S4E2	1199970000	B.43
KTB QL 262620 S4E3	1199980000	B.43
KTB QL 262620 S4E4	1199990000	B.43
KTB QL 303015 S4E1	1200020000	B.44
KTB QL 303015 S4E2	1200030000	B.44
KTB QL 303015 S4E3	1200040000	B.44
KTB QL 303015 S4E4	1200050000	B.44
KTB QL 303020 S4E1	1200070000	B.45
KTB QL 303020 S4E2	1200080000	B.45
KTB QL 303020 S4E3	1200090000	B.45
KTB QL 303020 S4E4	1200100000	B.45
KTB QL 352615 S4E1	1200120000	B.46
KTB QL 352615 S4E2	1200130000	B.46
KTB QL 352615 S4E3	1200140000	B.46
KTB QL 352615 S4E4	1200150000	B.46
KTB QL 352620 S4E1	1200170000	B.47
KTB QL 352620 S4E2	1200180000	B.47
KTB QL 352620 S4E3	1200190000	B.47
KTB QL 352620 S4E4	1200210000	B.47
KTB QL 403015 S4E1	1200230000	B.48
KTB QL 403015 S4E2	1200240000	B.48
KTB QL 403015 S4E3	1200250000	B.48
KTB QL 403015 S4E4	1200260000	B.48
KTB QL 403020 S4E1	1200280000	B.49
KTB QL 403020 S4E2	1200290000	B.49
KTB QL 403020 S4E3	1200310000	B.49
KTB QL 403020 S4E4	1200320000	B.49
KTB QL 453815 S4E1	1200340000	B.50
KTB QL 453815 S4E2	1200350000	B.50
KTB QL 453815 S4E3	1200360000	B.50
KTB QL 453815 S4E4	1200370000	B.50
KTB QL 453820 S4E1	1200390000	B.51
KTB QL 453820 S4E2	1200410000	B.51
KTB QL 453820 S4E3	1200420000	B.51
KTB QL 453820 S4E4	1200430000	B.51
KTB QL 484815 S4E1	1200450000	B.52
KTB QL 484815 S4E2	1200460000	B.52
KTB QL 484815 S4E3	1200470000	B.52
KTB QL 484815 S4E4	1200480000	B.52
KTB QL 484820 S4E1	1200510000	B.53
KTB QL 484820 S4E2	1200520000	B.53
KTB QL 484820 S4E3	1200530000	B.53
KTB QL 484820 S4E4	1200540000	B.53
KTB QL 553515 S4E1	1200560000	B.54
KTB QL 553515 S4E2	1200570000	B.54
KTB QL 553515 S4E3	1200580000	B.54
KTB QL 553515 S4E4	1200590000	B.54
KTB QL 553520 S4E1	1200620000	B.55
KTB QL 553520 S4E2	1200630000	B.55
KTB QL 553520 S4E3	1200640000	B.55
KTB QL 553520 S4E4	1200650000	B.55
KTB QL 624515 S4E1	1200670000	B.56
KTB QL 624515 S4E2	1200680000	B.56
KTB QL 624515 S4E3	1200690000	B.56
KTB QL 624515 S4E4	1200710000	B.56
KTB QL 624520 S4E1	1200730000	B.57
KTB QL 624520 S4E2	1200740000	B.57
KTB QL 624520 S4E3	1200750000	B.57
KTB QL 624520 S4E4	1200760000	B.57
KTB QL 765015 S4E1	1200780000	B.58
KTB QL 765015 S4E2	1200790000	B.58
KTB QL 765015 S4E3	1200810000	B.58
KTB QL 765015 S4E4	1200820000	B.58
KTB QL 765020 S4E1	1200840000	B.59
KTB QL 765020 S4E2	1200850000	B.59
KTB QL 765020 S4E3	1200860000	B.59
KTB QL 765020 S4E4	1200870000	B.59
KTB QL 916115 S4E1	1200890000	B.60
KTB QL 916115 S4E2	1200910000	B.60
KTB QL 916115 S4E3	1200920000	B.60
KTB QL 916115 S4E4	1200930000	B.60
KTB QL 916120 S4E1	1200950000	B.61
KTB QL 916120 S4E2	1200960000	B.61
KTB QL 916120 S4E3	1200970000	B.61
KTB QL 916120 S4E4	1200980000	B.61
KTB QL 987420 S4E1	1201010000	B.62
KTB QL 987420 S4E2	1201020000	B.62
KTB QL 987420 S4E3	1201030000	B.62
KTB QL 987420 S4E4	1201040000	B.62
KTB QLL S2 DB3	1191590000	B.93
KTB QLL S2 SLS	1191600000	B.93
KTB RNHD 221513 R	1281360000	B.15
KTB RNHD 221513 R	1281360000	B.41
KTB RNHD 262615 R	1281370000	B.16
KTB RNHD 262615 R	1281370000	B.42
KTB RNHD 262620 R	1281380000	B.17
KTB RNHD 262620 R	1281380000	B.43
KTB RNHD 303015 R	1281390000	B.18
KTB RNHD 303015 R	1281390000	B.44
KTB RNHD 303020 R	1281400000	B.19
KTB RNHD 303020 R	1281400000	B.45
KTB RNHD 352615 R	1281410000	B.20
KTB RNHD 352615 R	1281410000	B.46
KTB RNHD 352620 R	1281420000	B.21
KTB RNHD 352620 R	1281420000	B.47
KTB RNHD 403015 R	1281430000	B.22
KTB RNHD 403015 R	1281430000	B.48
KTB RNHD 403020 R	1281440000	B.23
KTB RNHD 403020 R	1281440000	B.49
KTB RNHD 453815 R	1281450000	B.24
KTB RNHD 453815 R	1281450000	B.50
KTB RNHD 453820 R	1281460000	B.25
KTB RNHD 453820 R	1281460000	B.51
KTB RNHD 484815 R	1281470000	B.26
KTB RNHD 484815 R	1281470000	B.52
KTB RNHD 484820 R	1281480000	B.27
KTB RNHD 484820 R	1281480000	B.53
KTB RNHD 553515 R	1281490000	B.28
KTB RNHD 553515 R	1281490000	B.54
KTB RNHD 553520 R	1281500000	B.29
KTB RNHD 553520 R	1281500000	B.55
KTB RNHD 624515 R	1281510000	B.30
KTB RNHD 624515 R	1281510000	B.56
KTB RNHD 624520 R	1281520000	B.31
KTB RNHD 624520 R	1281520000	B.57
KTB RNHD 765015 R	1281530000	B.32
KTB RNHD 765015 R	1281530000	B.58
KTB RNHD 765020 R	1281540000	B.33
KTB RNHD 765020 R	1281540000	B.59
KTB RNHD 916115 R	1281550000	B.34
KTB RNHD 916115 R	1281550000	B.60
KTB RNHD 916120 R	1281570000	B.35
KTB RNHD 916120 R	1281570000	B.61
KTB RNHD 987420 R	1281580000	B.36
KTB RNHD 987420 R	1281580000	B.62
KTBI FS 302015 S2E0	1197200000	B.107
KTBI FS 302015 S2E1	1197210000	B.107
KTBI FS 303015 S2E0	1197220000	B.108
KTBI FS 303015 S2E1	1197230000	B.108
KTBI FS 303022 S2E0	1197240000	B.109
KTBI FS 303022 S2E1	1197250000	B.109
KTBI FS 403015 S2E0	1197260000	B.110
KTBI FS 403015 S2E1	1197270000	B.110
KTBI FS 403022 S2E0	1197280000	B.111
KTBI FS 403022 S2E1	1197290000	B.111
KTBI FS 404022 S2E0	1197300000	B.112
KTBI FS 404022 S2E1	1197310000	B.112
KTBI FS 504022 S2E0	1197320000	B.113
KTBI FS 504022 S2E1	1197330000	B.113
KTBI FS 505022 S2E0	1197340000	B.114
KTBI FS 505022 S2E1	1197350000	B.114
KTBI FS 604022 S2E0	1197360000	B.115
KTBI FS 604022 S2E1	1197370000	B.115
KTBI FS 606022 S2E0	1197380000	B.116
KTBI FS 606022 S2E1	1197390000	B.116
KTBI FS 806022 S2E0	1197400000	B.117
KTBI FS 806022 S2E1	1197410000	B.117
KTBI MF S2 SET	1289180000	B.93
KTBI MOPL 3020 MSZN	1309690000	B.93
KTBI MOPL 3020 MSZN	1309690000	B.107
KTBI MOPL 3020 S2N	1309700000	B.93
KTBI MOPL 3020 S2N	1309700000	B.107
KTBI MOPL 3030 MSZN	1310410000	B.94
KTBI MOPL 3030 S2N	1310320000	B.94
KTBI MOPL 3030 S2N	1310320000	B.95
KTBI MOPL 3030 S2N	1310320000	B.108
KTBI MOPL 3030 S2N	1310320000	B.109
KTBI MOPL 4030 MSZN	1310420000	B.96
KTBI MOPL 4030 S2N	1310330000	B.96
KTBI MOPL 4030 S2N	1310330000	B.97
KTBI MOPL 4030 S2N	1310330000	B.110
KTBI MOPL 4030 S2N	1310330000	B.111
KTBI MOPL 4040 MSZN	1310430000	B.98
KTBI MOPL 4040 MSZN	1310430000	B.112
KTBI MOPL 4040 S2N	1310340000	B.98
KTBI MOPL 4040 S2N	1310340000	B.112
KTBI MOPL 5040 MSZN	1310440000	B.99
KTBI MOPL 5040 MSZN	1310440000	B.113
KTBI MOPL 5040 S2N	1310350000	B.99
KTBI MOPL 5040 S2N	1310350000	B.113
KTBI MOPL 5050 MSZN	1310450000	B.100
KTBI MOPL 5050 MSZN	1310450000	B.114
KTBI MOPL 5050 S2N	1310360000	B.100
KTBI MOPL 5050 S2N	1310360000	B.114
KTBI MOPL 6040 MSZN	1310460000	B.101
KTBI MOPL 6040 MSZN	1310460000	B.115
KTBI MOPL 6040 S2N	1310370000	B.101
KTBI MOPL 6040 S2N	1310370000	B.115
KTBI MOPL 6060 MSZN	1310470000	B.102
KTBI MOPL 6060 MSZN	1310470000	B.116
KTBI MOPL 6060 S2N	1310380000	B.102
KTBI MOPL 6060 S2N	1310380000	B.116
KTBI MOPL 8060 MSZN	1310480000	B.103
KTBI MOPL 8060 MSZN	1310480000	B.117
KTBI MOPL 8060 S2N	1310390000	B.103
KTBI MOPL 8060 S2N	1310390000	B.117
KTBI QL 302015 S2E0	1197430000	B.93
KTBI QL 302015 S2E1	1197440000	B.93
KTBI QL 303015 S2E0	1197450000	B.94
KTBI QL 303015 S2E1	1197460000	B.94
KTBI QL 303022 S2E0	1197470000	B.95
KTBI QL 303022 S2E1	1197480000	B.95
KTBI QL 403015 S2E0	1197490000	B.96
KTBI QL 403015 S2E1	1197500000	B.96
KTBI QL 403022 S2E0	1197510000	B.97
KTBI QL 403022 S2E1	1197520000	B.97
KTBI QL 404022 S2E0	1197530000	B.98
KTBI QL 404022 S2E1	1197540000	B.98
KTBI QL 504022 S2E0	1197550000	B.99
KTBI QL 504022 S2E1	1197560000	B.99
KTBI QL 505022 S2E0	1197570000	B.100
KTBI QL 505022 S2E1	1197580000	B.100
KTBI QL 604022 S2E0	1197590000	B.101
KTBI QL 604022 S2E1	1197600000	B.101
KTBI QL 606022 S2E0	1197610000	B.102
KTBI QL 606022 S2E1	1197620000	B.102
KTBI QL 806022 S2E0	1197630000	B.103
KTBI QL 806022 S2E1	1197640000	B.103
KUB M20 BS 0 NI 1 G16	1095100000	C.45
KUB M20 BS 0 NI 1 G20	1095140000	C.45
KUB M20 BS 0 NI 1 G20S	1095120000	C.45
KUB M20 BS 0 NI 2 G16	1095110000	C.45
KUB M20 BS 0 NI 2 G20	1095150000	C.45
KUB M20 BS 0 NI 2 G20S	1095130000	C.45
KUB M20 BS 0 SC 1 G16	1095340000	C.44
KUB M20 BS 0 SC 1 G20	1095380000	C.44
KUB M20 BS 0 SC 1 G20S	1095360000	C.44
KUB M20 BS 0 SC 2 G16	1095350000	C.44
KUB M20 BS 0 SC 2 G20	1095390000	C.44
KUB M20 BS 0 SC 2 G20S	1095370000	C.44
KUB M25 BS 0 NI 1 G25	1095160000	C.45
KUB M25 BS 0 NI 2 G25	1095170000	C.45
KUB M25 BS 0 SC 1 G25	1095400000	C.44
KUB M25 BS 0 SC 2 G25	1095410000	C.44
KUB M32 BS 0 NI 1 G32	1095180000	C.45
KUB M32 BS 0 NI 2 G32	1095190000	C.45
KUB M32 BS 0 SC 1 G32	1095420000	C.44
KUB M32 BS 0 SC 2 G32	1095430000	C.44
KUB M40 BS 0 NI 1 G40	1095200000	C.45

Type	Order No.	Page
KUB M40 BS O NI 2 G40	1095210000	C.45
KUB M40 BS O SC 1 G40	1095440000	C.44
KUB M40 BS O SC 2 G40	1095450000	C.44
KUB M50 BN O NI 2 G50	1095250000	C.45
KUB M50 BS O NI 1 G50	1095240000	C.45
KUB M50 BS O NI 1 G50S	1095220000	C.45
KUB M50 BS O NI 2 G50S	1095230000	C.45
KUB M50 BS O SC 1 G50	1095480000	C.44
KUB M50 BS O SC 1 G50S	1095460000	C.44
KUB M50 BS O SC 2 G50	1095490000	C.44
KUB M50 BS O SC 2 G50S	1095470000	C.44
KUB M63 BS O NI 1 G63	1095280000	C.45
KUB M63 BS O NI 1 G63S	1095260000	C.45
KUB M63 BS O NI 2 G63	1095290000	C.45
KUB M63 BS O NI 2 G63S	1095270000	C.45
KUB M63 BS O SC 1 G63	1095520000	C.44
KUB M63 BS O SC 1 G63S	1095500000	C.44
KUB M63 BS O SC 2 G63	1095530000	C.44
KUB M63 BS O SC 2 G63S	1095510000	C.44
KUB M75 BS O NI 1 G75	1095320000	C.45
KUB M75 BS O NI 1 G75S	1095300000	C.45
KUB M75 BS O NI 2 G75	1095330000	C.45
KUB M75 BS O NI 2 G75S	1095310000	C.45
KUB M75 BS O SC 1 G75	1095560000	C.44
KUB M75 BS O SC 1 G75S	1095540000	C.44
KUB M75 BS O SC 2 G75	1095570000	C.44
KUB M75 BS O SC 2 G75S	1095550000	C.44
KV 11-M	1656390000	C.14
KV 13-M	1656400000	C.14
KV 16-M	1656410000	C.14
KV 21-M	1656420000	C.14
KV 29-M	1656430000	C.14

M

Type	Order No.	Page
MF FPC	9536040000	B.209
MF MPC	9535600000	B.202
MF POK big	9510910000	B.171
MF POK small	9510900000	B.166
MF TBF	0360800000	B.194
MOPL K1 BKVARIO SET	8000004495	B.153
MOPL K1 N FE	1905280000	B.133
MOPL K11 STAHL	3073000000	B.134
MOPL K2 BKVARIO SET	8000004496	B.155
MOPL K2 N FE	1905270000	B.135
MOPL K21 STAHL	3073020000	B.136
MOPL K3 BKVARIO SET	8000004497	B.157
MOPL K3 N FE	1898210000	B.137
MOPL K3 NT FE	1899630000	B.137
MOPL K31 STAHL	3073040000	B.138
MOPL K32 STAHL	3073050000	B.139
MOPL K4 STAHL	3073060000	B.140
MOPL K41 STAHL	3073070000	B.141
MOPL K5 STAHL	3073080000	B.142
MOPL K51 STAHL	3073090000	B.143
MOPL K52 STAHL	3073100000	B.144
MOPL K6 STAHL	3073110000	B.145
MOPL K61 STAHL	3073120000	B.146
MOPL K7 STAHL	3073130000	B.147
MOPL K71 STAHL	3073140000	B.148
MOPL SET BK12 S	8000004135	B.157
MOPL SET BK4 S	8000004129	B.153
MOPL SET BK6 S	8000004132	B.155
MP FPC 20/20	9535920000	B.209
MP FPC 20/30	9535930000	B.209
MP FPC 20/40	9535940000	B.210
MP FPC 30/30	9535950000	B.210
MP FPC 30/40	9535960000	B.211
MP FPC 40/60	9535980000	B.211
MP MPC 07/12	9535540000	B.202
MP MPC 12/12	9535550000	B.203
MP MPC 12/17	9535560000	B.203
MP MPC 17/17	9535570000	B.205
MP MPC 17/25	9535580000	B.206
MP POK 32	9510700000	B.170
MP TBF 19/15	9502720000	B.194
MP TBF 30/19	3018950000	B.194
MP TBF 30/30	9502730000	B.195
MP TBF 37/30	9502740000	B.195
MP TBF 49/30	9500960000	B.196
MP TBF 56/30	9500950000	B.196
MP TBF 60/30	9502750000	B.197
MP TBF 60/37	9502910000	B.198
MP TBF 60/60	9502920000	B.198
MPC 07/12/07 7035	9535170000	B.202
MPC 07/12/07 trsp	9535180000	B.202
MPC 07/12/12 7035	9535210000	B.202
MPC 07/12/12 trsp	9535220000	B.202
MPC 12/12/07 7035	9535230000	B.203
MPC 12/12/07 trsp	9535240000	B.203
MPC 12/17/07 7035	9535290000	B.203
MPC 12/17/07 trsp	9535300000	B.203
MPC 12/17/10 7035	9535310000	B.204
MPC 12/17/10 trsp	9535320000	B.204
MPC 12/17/12 7035	9535330000	B.204
MPC 12/17/12 trsp	9535340000	B.204
MPC 17/17/07 7035	9535370000	B.205
MPC 17/17/07 trsp	9535380000	B.205
MPC 17/17/15 7035	9535430000	B.206
MPC 17/17/15 trsp	9535440000	B.206
MPC 17/25/10 7035	9535470000	B.206
MPC 17/25/10 trsp	9535480000	B.206

P

Type	Order No.	Page
PADLOCK KLIPPON TB SS	0905680000	B.15
PEBZ M10 KTB S4 SET	1192690000	B.15
POK MOPL 0808	9510570000	B.166
POK MOPL 0811	9510580000	B.167
POK MOPL 0816	9510680000	B.168
POK MOPL 0819	9510690000	B.169
POK MOPL 1212	9510590000	B.171
POK MOPL 1222	9510600000	B.172
POK MOPL 1616	9510610000	B.173
POK MOPL 1626	9510620000	B.174
POK MOPL 1636	9510630000	B.175
POK MOPL 1656	9510710000	B.176
POK MOPL 2525	9510640000	B.181
POK MOPL 2540	9510650000	B.182
POK MOPL 2560	9510660000	B.179
POK MOPL 4040	9510670000	B.180

S

Type	Order No.	Page
SD FIXING SET	1285200000	B.15
SD Set S2.0-5.5	9205560000	E.18
SD Set S2.5-5.5/PH1/2	9009740000	E.18
SD TH10	9009180000	E.17
SD TH15	9009170000	E.17
SD TH20	9009160000	B.130
SD TO 0,6X3,0	1323880000	E.18
SDI Set S2.0-5.5	9205550000	E.16
SDI Set S2.5-5.5/PH1/2	9009730000	E.16
SDI Set S2.5-5.5/PZ1/2	1128540000	E.16
SDI SL/PH 1	1318330000	E.15
SDI SL/PH 2	1318340000	E.15
SDIK PH0	9008560000	E.15
SDIK PH1	9008570000	E.15
SDIK PH2	9008580000	E.15
SDIK PH3	9008590000	E.15
SDIK PZ1	9008900000	E.15
SDIK PZ2	9008890000	E.15
SDIS 0.4X2.0X60	9205690000	E.15
SDIS 0.4X2.5X75	9008370000	E.15
SDIS 0.5X3.0X100	9008380000	E.15
SDIS 0.6X3.5X100	9008390000	E.15
SDIS 0.8X4.0X100	9008400000	E.15
SDIS 1.0X4.5X125	9008910000	E.15
SDIS 1.0X4.5X175	9205700000	E.15
SDIS 1.0X5.5X125	9008410000	E.15
SDIS 1.0X5.5X175	9205710000	E.15
SDIS 1.2X6.5X150	9008420000	E.15
SDIS 1.6X8.0X175	9008430000	E.15
SDIZ 0,8X5,5 150/248	9008640000	E.15
SDIZ 0.6X3.5X100	9008450000	E.15
SDIZ 0.8X4.0X100	9008460000	E.15
SDK PH0	9008470000	E.17
SDK PH1	9008480000	E.17
SDK PH2	9008490000	E.17
SDK PH3	9008500000	E.17
SDK PZ1	9008530000	E.17
SDK PZ2	9008540000	E.17
SDK PZ3	9008550000	E.17
SDQ T15	1318390000	E.22
SDQ T20	1318400000	E.22
SDQ T40	1318410000	E.22
SDS 0.4X2.0X60	9037160000	E.17
SDS 0.4X2.5X75	9009030000	E.17
SDS 0.5X3.0X80	9008320000	E.17
SDS 0.6X3.5X100	9008330000	E.17
SDS 0.6X3.5X200	9010110000	E.17
SDS 0.8X4.0X100	9008340000	E.17
SDS 0.8X4.0X125	9009020000	E.17
SDS 1.0X5.5X150	9008350000	E.17
SDS 1.2X6.5X150	9009010000	E.17
SFNS5 VKMU M5 SW15	0433500000	B.120
SK 10,0x125	9009070000	B.120
SK WSD-S 1,5-10,0	9008850000	E.19
SKMU EMV M12	1777610000	C.50
SKMU EMV M16	1777620000	C.50
SKMU EMV M20	1777630000	C.50
SKMU EMV M25	1777640000	C.50
SKMU EMV M32	1777650000	C.50
SKMU EMV M40	1777660000	C.50
SKMU EMV M50	1777670000	C.50
SKMU EMV M63	1777680000	C.50
SKMU EMV PG 36	1777710000	C.50
SKMU EMV PG 42	1777700000	C.50
SKMU EMV PG 48	1777690000	C.50
SKMU EMV PG11	1718920000	C.50
SKMU EMV PG13,5	1718930000	C.50
SKMU EMV PG16	1718940000	C.50
SKMU EMV PG21	1718950000	C.50
SKMU EMV PG29	1718960000	C.50
SKMU EMV PG7	1718900000	C.50
SKMU EMV PG9	1718910000	C.50
SKMU M12 - K GR	1772440000	C.46
SKMU M12 - MS	1772360000	C.48
SKMU M12-K SW	1806540000	C.47
SKMU M16 - K GR	1772450000	C.46
SKMU M16 K SW	1736920000	C.47
SKMU M16 MS	1736990000	C.48
SKMU M16 MS SC	0930640001	C.49
SKMU M20 - K GR	1772460000	C.46
SKMU M20 K SW	1736930000	C.47
SKMU M20 MS	1737000000	C.48
SKMU M20 MS SC	0930640002	C.49
SKMU M25 - K GR	1772470000	C.46
SKMU M25 K SW	1736940000	C.47
SKMU M25 MS	1737010000	C.48
SKMU M25 MS SC	0930640003	C.49
SKMU M32 - K GR	1772480000	C.46
SKMU M32 K SW	1736950000	C.47
SKMU M32 MS	1737020000	C.48
SKMU M32 MS SC	0930640004	C.49
SKMU M40 - K GR	1772490000	C.46
SKMU M40 K SW	1736960000	C.47
SKMU M40 MS	1737030000	C.48
SKMU M40 MS SC	0930640005	C.49
SKMU M50 - K GR	1772500000	C.46
SKMU M50 K SW	1736970000	C.47
SKMU M50 MS	1737040000	C.48
SKMU M50 MS SC	0930640006	C.49
SKMU M63 - K GR	1772510000	C.46
SKMU M63 K SW	1736980000	C.47
SKMU M63 MS	1737050000	C.48
SKMU M63 MS SC	0930640007	C.49
SKMU M75 MS	1737060000	C.48
SKMU M75 MS SC	0930640008	C.49
SKMU M80 MS SC	0930640009	C.49
SKMU M85 MS SC	0930640010	C.49
SKMU M90 MS SC	0930640011	C.49
SKMU PG 13,5-K GR	1697470000	C.46
SKMU PG11-K GR	1697460000	C.46
SKMU PG11-K SW	1719120000	C.47
SKMU PG11-MS	1694090000	C.48
SKMU PG13,5-K SW	1719130000	C.47
SKMU PG13,5-MS	1694100000	C.48
SKMU PG16-K GR	1697480000	C.46
SKMU PG16-K SW	1719140000	C.47
SKMU PG16-MS	1694110000	C.48
SKMU PG21-K GR	1698220000	C.46
SKMU PG21-K SW	1719150000	C.47
SKMU PG21-MS	1719200000	C.48
SKMU PG29-K GR	1698230000	C.46
SKMU PG29-K SW	1719160000	C.47
SKMU PG29-MS	1719210000	C.48
SKMU PG36-K GR	1698240000	C.46
SKMU PG36-K SW	1719170000	C.47
SKMU PG36-MS	1719220000	C.48
SKMU PG42-K GR	1698250000	C.46
SKMU PG42-K SW	1719180000	C.47
SKMU PG42-MS	1719230000	C.48
SKMU PG48-K GR	1719090000	C.46
SKMU PG48-K SW	1719190000	C.47
SKMU PG48-MS	1719240000	C.48
SKMU PG7-K GR	1697440000	C.46
SKMU PG7-K SW	1719100000	C.47
SKMU PG7-MS	1694070000	C.48
SKMU PG9-K GR	1697450000	C.46
SKMU PG9-K SW	1719110000	C.47
SKMU PG9-MS	1694080000	C.48
SKS 2,0-8,0	9008860000	E.19
SKS 2,0-8,0 MR	9008870000	E.19
SP M6 10 S2	0935110000	B.15
SP M6 15 MSZN	3896100000	B.93
SP M6 15 S2	0935120000	B.15
SP M6 20 MSZN	3896200000	B.93
SP M6 20 S2	0935130000	B.15
SP M6 30 MSZN	3896300000	B.93
SP M6 30 S2	0935140000	B.15
SYSTEM 11+1	9009750000	E.20
SZS M16	1736300000	C.59
SZS M20	1736310000	C.59
SZS M25	1736320000	C.59
SZS M32	1736330000	C.59
SZS M40	1736340000	C.59
SZS M50	1736350000	C.59
SZS M63	1736360000	C.59

T

Type	Order No.	Page
TBF 19/15/14 7035	0360100000	B.194
TBF 19/15/14 trsp	0500500000	B.194
TBF 30/19/18 7035	0360200000	B.194
TBF 30/19/18 trsp	0500600000	B.194
TBF 30/30/18 7035	0360300000	B.195
TBF 30/30/18 trsp	0500700000	B.195
TBF 37/30/18 7035	0360400000	B.195
TBF 37/30/18 trsp	0500800000	B.195
TBF 49/30/18 7035	9502800000	B.196
TBF 49/30/21 trsp	9502840000	B.196
TBF 56/30/18 7035	9502810000	B.196
TBF 56/30/21 trsp	9502850000	B.196
TBF 60/30/18 7035	0360500000	B.197
TBF 60/30/21 trsp	0500900000	B.197
TBF 60/37/18 7035	9502820000	B.198
TBF 60/37/21 trsp	9502860000	B.198
TBF 60/60/18 7035	9502830000	B.198
TBF 60/60/21 trsp	9502870000	B.198
TH-S 9-40	9008880000	E.19
TPSD FIXING SET KTB	1252190000	B.15
TPSDHA KTB 100X25 S2 2R	1257640000	B.15
TPSDHA KTB 130X50 S2 R	1283450000	B.15
TPSDHA KTB 70X70M3 S2 R	1279320000	B.15
TS15 114 Klippon K21 CSS	1910020000	B.136
TS15 147 Klippon POK3 CSS	1928080000	B.168
TS15 155 Klippon K3 CSS	1910030000	B.137
TS15 164 Klippon K31 CSS	1910040000	B.138
TS15 60 KLippon K1 CSS	1909980000	B.133
TS15 64 Klippon K11	1909990000	B.134
TS15 68 Klippon POK1 CSS	1928060000	B.166
TS15 90 KLippon K2 CSS	1910010000	B.135
TS15 98 Klippon POK2 CSS	1928070000	B.167
TS35 105 Klippon K41/POK4	1910070000	B.141
TS35 64 Klippon K4K11	1910060000	B.140
TS35 POK4 Set	1928110000	B.171
TS35 POK51 Set	1928130000	B.173
TS35/140 Klippon K52 POK51	1910100000	B.144
TS35/148 KLIPPON K5 CSS	1910080000	B.142
TS35/172 KLIPPON K6 CSS	1910110000	B.145
TS35/203 KLIPPON K51POK5	1910090000	B.143
TS35/235 KLIPPON K32 CSS	1910050000	B.139
TS35/239 KLIPPON K61POK6	1910120000	B.146
TS35/260 KLIPPON K71 CSS	1910140000	B.148
TS35/324 KLIPPON K7 CSS	1910130000	B.147

V

Type	Order No.	Page
VG 11-K68	1568990000	C.7
VG 11-K68 SKS	1720490000	C.8
VG 11-MS54	0260700000	C.9
VG 11-MS54-ZE	1718820000	C.12
VG 11-MS68	1569080000	C.11
VG 11-SS 68 KB 5-10	1009760000	C.17
VG 13,5-K68	1569000000	C.7
VG 13,5-MS54	0260800000	C.9
VG 13,5-MS54-ZE	1718830000	C.12
VG 13,5-MS68	1569090000	C.11
VG 13.5-K68 SKS	1720500000	C.8
VG 16-K68	1569010000	C.7
VG 16-K68 SKS	1720510000	C.8
VG 16-MS54	0261400000	C.9
VG 16-MS54-ZE	1718840000	C.12
VG 16-MS68	1569100000	C.11
VG 16-SS 68 KB 10-14	1009780000	C.17
VG 21-K68	1569020000	C.7
VG 21-K68 SKS	1720520000	C.8
VG 21-MS54	0260900000	C.9
VG 21-MS54-ZE	1718850000	C.12
VG 21-MS68	1569110000	C.11
VG 21-SS 68 KB 13-18	1009790000	C.17
VG 29-K68	1569030000	C.7
VG 29-MS54	0261000000	C.9
VG 29-MS54-ZE	1718860000	C.12
VG 29-MS68	1569120000	C.11
VG 29-SS 68 KB 18-25	1009800000	C.17
VG 36-K68	1569040000	C.7
VG 36-MS54	0497600000	C.9
VG 36-MS54-ZE	1718870000	C.12
VG 36-MS68	1569130000	C.11
VG 36-SS 68 KB 22-32	1009810000	C.17
VG 42-K68	1569050000	C.7
VG 42-MS54	0497700000	C.9
VG 42-MS54-ZE	1718880000	C.12
VG 42-MS68	1569140000	C.11
VG 42-SS 68 KB 30-38	1009820000	C.17
VG 48-K68	1718770000	C.7
VG 48-MS54	1718780000	C.9
VG 48-MS54-ZE	1718890000	C.12
VG 48-MS68	1718790000	C.11
VG 48-SS 68 KB 34-44	1009830000	C.17
VG 7-K68	1568970000	C.7
VG 7-MS54	0521500000	C.9
VG 7-MS54-ZE	1718800000	C.12
VG 7-MS68	1569060000	C.11
VG 7-SS 68 KB 3-6.5	1009740000	C.17
VG 9-K68	1568980000	C.7
VG 9-K68 SKS	1720480000	C.8
VG 9-MS54	0261500000	C.9
VG 9-MS54-ZE	1718810000	C.12
VG 9-MS68	1569070000	C.11
VG 9-SS 68 KB 4-8	1009750000	C.17
VG EMV M18X1,5	1706920000	C.15
VG EMV M20X1,5	1706940000	C.15
VG EMV M24X1,5	1706930000	C.15
VG EMV M25X1,5	1706950000	C.15
VG EMV PG 11	1706870000	C.15
VG EMV PG 13,5	1706880000	C.15
VG EMV PG 16 K14	1706890000	C.15
VG EMV PG 16 K18	1713880000	C.15
VG EMV PG 21 K18	1706900000	C.15
VG EMV PG 29 K26	1706910000	C.15
VG EMV PG 29 K29	1713900000	C.15
VG EMV PG 7/9	1713870000	C.15
VG EMV PG 9/11	1706860000	C.15

Type	Order No.	Page
VG EMV PG K28	1713890000	C.15
VG EMV PG36 K32-27	1770410000	C.15
VG H M20 MS	1921720000	C.14
VG H M25 MS	1921740000	C.14
VG H M32 MS	1921760000	C.14
VG H M40 MS	1921770000	C.14
VG M12 - MS 1/EMV	1909490000	C.16
VG M12 - MS 68	1772200000	C.11
VG M12-1/K68	1772280000	C.7
VG M12-K67	1909660000	C.6
VG M12-K68 SKS	1776700000	C.8
VG M16 - K 68	1772290000	C.7
VG M16 - MS 1/EMV	1909500000	C.16
VG M16 - MS 68	1772210000	C.11
VG M16-1/K68	1909860000	C.7
VG M16-1/MS68	1909910000	C.11
VG M16-K67 4-8	1909670000	C.6
VG M16-K67 5-10	1909680000	C.6
VG M16-K68 SKS	1776710000	C.8
VG M20 - MS 1/EMV	1909510000	C.16
VG M20 - MS 68	1772220000	C.11
VG M20-1/K68	1772300000	C.7
VG M20-K67 10-14	1909700000	C.6
VG M20-K67 6-12	1909690000	C.6
VG M20-K68 SKS 10-14	1776720000	C.8
VG M20-K68 SKS 6-12	1778860000	C.8
VG M20-MS54 ZR 4-13	1009560000	C.10
VG M25 - K 68	1772310000	C.7
VG M25 - MS 1/EMV	1909520000	C.16
VG M25 - MS 68	1772230000	C.11
VG M25-1/K68	1909870000	C.7
VG M25-1/MS68	1909920000	C.11
VG M25-K67	1909710000	C.6
VG M25-K68 SKS	1776730000	C.8
VG M25-MS54 ZR 8.5-18	1009570000	C.10
VG M32 - K 68	1772320000	C.7
VG M32 - MS 1/EMV	1909530000	C.16
VG M32 - MS 68	1772240000	C.11
VG M32-1/K68	1909880000	C.7
VG M32-1/MS68	1909930000	C.11
VG M32-K67	1909720000	C.6
VG M32-MS54 ZR 16-26	1009580000	C.10
VG M40 - K 68	1772330000	C.7
VG M40 - MS 1/EMV	1909540000	C.16
VG M40 - MS 68	1772250000	C.11
VG M40-1/K68	1909890000	C.7
VG M40-1/MS68	1909940000	C.11
VG M40-K67	1909730000	C.6
VG M40-MS54 ZR 23-30	1009590000	C.10
VG M50 - K 68	1772340000	C.7
VG M50 - MS 1/EMV	1909550000	C.16
VG M50 - MS 68	1772260000	C.11
VG M50-1/MS68	1909950000	C.11
VG M50-K67	1909740000	C.6
VG M50-MS54 ZR 32-40	1009600000	C.10
VG M63 - MS 1/EMV	1909560000	C.16
VG M63 - MS 68	1772270000	C.11
VG M63-1/K68	1772350000	C.7
VG M63-K67	1909750000	C.6
VG PG11-K67	1909780000	C.6
VG PG13,5-K67	1909790000	C.6
VG PG16-K67	1909800000	C.6
VG PG16-MS54 ZR 7.5-15	1009620000	C.10
VG PG21-K67	1909810000	C.6
VG PG21-MS54 ZR 10-19	1009630000	C.10
VG PG29-K67	1909820000	C.6
VG PG29-MS54 ZR 18-27	1009640000	C.10
VG PG36-K67	1909830000	C.6
VG PG36-MS54 ZR 24-33	1009650000	C.10
VG PG42-K67	1909840000	C.6
VG PG42-MS54 ZR 30-39	1009670000	C.10
VG PG48-K67	1909850000	C.6
VG PG7-K67	1909760000	C.6
VG PG9-K67	1909770000	C.6
VGM12-MS54 KB 5,0-7,0	1778410000	C.9
VGM12-MS54 KB 6,0-8,0	1778400000	C.9
VGM12-MS54 ZE 5,0-7,0	1778420000	C.12
VGM12-SS 68 KB 3-6.5	1009840000	C.17
VGM16-MS54	1778390000	C.9
VGM16-MS54 ZE	1778440000	C.12
VGM16-MS54ZE BS4-10	1005190000	C.13
VGM16-MS54ZE BS6.5-12.5	1005200000	C.13
VGM16-SS 68 KB 4-8	1009850000	C.17
VGM20-MS54 KB 10,0-12,0	1778370000	C.9
VGM20-MS54 KB 8,0-10,0	1778380000	C.9
VGM20-MS54 ZE	1778450000	C.12
VGM20-MS54 ZE 6,0-13,5	1778460000	C.12
VGM20-MS54ZE BS1	1005210000	C.13
VGM20-MS54ZE BS6.5-15	1005220000	C.13
VGM20-SS 68 KB 6-12	1009860000	C.17
VGM25-MS54 KB 12,0-14,0	1778360000	C.9
VGM25-MS54 KB 15,0-17,0	1778350000	C.9
VGM25-MS54 ZE	1778480000	C.12
VGM25-MS54ZE BS9-19	1005230000	C.13
VGM25-SS 68 KB 10-14	1009870000	C.17
VGM32-MS54	1778340000	C.9
VGM32-MS54 ZE	1778490000	C.12
VGM32-MS54ZE BS17-27	1005240000	C.13
VGM32-SS 68 KB 13-18	1009880000	C.17

Type	Order No.	Page
VGM40-MS54	1778330000	C.9
VGM40-MS54 ZE	1778500000	C.12
VGM40-SS 68 KB 18-25	1009890000	C.17
VGM50-MS54 KB 31,0-33,0	1778320000	C.9
VGM50-MS54 KB 39,0-41,0	1778310000	C.9
VGM50-MS54 ZE	1778520000	C.12
VGM50-SS 68 KB 22-32	1009900000	C.17
VGM63-MS54	1778300000	C.9
VGM63-MS54 ZE	1778530000	C.12
VGM63-SS 68 KB 34-44	1009910000	C.17
VGPG13.5-MS54ZR7.5-12.5	1009610000	C.10
VP 11-K54	0294860000	C.60
VP 11-MS65	0294800000	C.61
VP 13,5-K54	0294960000	C.60
VP 13,5-MS65	0294900000	C.61
VP 16-K54	0295060000	C.60
VP 16-MS65	0295000000	C.61
VP 21-K54	0295160000	C.60
VP 21-MS65	0295100000	C.61
VP 29-K54	0501160000	C.60
VP 29-MS65	0501100000	C.61
VP 36-K54	0501260000	C.60
VP 36-MS65	0501200000	C.61
VP 42-K54	0501360000	C.60
VP 42-MS65	0501300000	C.61
VP 48-K54	1719260000	C.60
VP 48-MS65	1719270000	C.61
VP 7-K54	1719250000	C.60
VP 7-MS65	0521600000	C.61
VP 9-K54	0294760000	C.60
VP 9-MS65	0294700000	C.61
VP M12 K54	1776930000	C.60
VP M12-MS65	1777720000	C.61
VP M16 EXE MS	1210890000	C.63
VP M16 K54	1776920000	C.60
VP M16-EXE MS	1737140000	B.152
VP M16-EXE SW	1737070000	C.62
VP M16-MS65	1777730000	C.61
VP M20 EXE MS	1210900000	C.63
VP M20 K54	1776910000	C.60
VP M20-EXE MS	1737150000	B.153
VP M20-EXE SW	1737080000	C.62
VP M20-MS65	1777740000	C.61
VP M25 EXE MS	1210910000	C.63
VP M25 K54	1776900000	C.60
VP M25-EXE SW	1737090000	C.62
VP M25-MS65	1777750000	C.61
VP M32 EXE MS	1210920000	C.63
VP M32 K54	1776940000	C.60
VP M32-EXE SW	1737100000	C.62
VP M32-MS65	1777760000	C.61
VP M40 EXE MS	1210930000	C.63
VP M40 K54	1776950000	C.60
VP M40-EXE SW	1737110000	C.62
VP M40-MS65	1777770000	C.61
VP M50 EXE MS	1210940000	C.63
VP M50 K54	1776960000	C.60
VP M50-EXE SW	1737120000	C.62
VP M50-MS65	1777780000	C.61
VP M63 EXE MS	1210950000	C.63
VP M63 K54	1776970000	C.60
VP M63-EXE SW	1737130000	C.62
VP M63-MS65	1777790000	C.61

W

WK 1/4" C6,3 E6,3	9202510000	E.11
WK IK PH0	9918460000	E.12
WK IK PH1	9918470000	E.12
WK IK PH2	9918480000	E.12
WK IK PZ0	9918490000	E.12
WK IK PZ1	9918500000	E.12
WK IK PZ2	9918510000	E.12
WK IK SL/PH1	1318130000	E.12
WK IK SL/PH2	1318140000	E.12
WK K PH0	9918570000	E.11
WK K PH1	9918580000	E.11
WK K PH2	9918590000	E.11
WK K PZ0	9918600000	E.11
WK K PZ1	9918610000	E.11
WK K PZ2	9918620000	E.11
WK S 0,4x2,5	9918520000	E.11
WK S 0,5x3,0	9918530000	E.11
WK S 0,6x3,5	9918540000	E.11
WK S 0,8x4,0	9918550000	E.11
WK S 1,0x5,5	9918560000	E.11
WK SI 0,4x2,5	9918410000	E.12
WK SI 0,5x3,0	9918420000	E.12
WK SI 0,6x3,5	9918430000	E.12
WK SI 0,8x4,0	9918440000	E.12
WK SI 1,0x5,5	9918450000	E.12

Order No.	Type	Page

0230000000

0235000000	IS 8 DIN 6911	E.22

0260000000

0260700000	VG 11-MS54	C.9
0260800000	VG 13,5-MS54	C.9
0260900000	VG 21-MS54	C.9
0261000000	VG 29-MS54	C.9
0261400000	VG 16-MS54	C.9
0261500000	VG 9-MS54	C.9

0290000000

0294700000	VP 9-MS65	C.61
0294760000	VP 9-K54	C.60
0294800000	VP 11-MS65	C.61
0294860000	VP 11-K54	C.60
0294900000	VP 13,5-MS65	C.61
0294960000	VP 13,5-K54	C.60
0295000000	VP 16-MS65	C.61
0295060000	VP 16-K54	C.60
0295100000	VP 21-MS65	C.61
0295160000	VP 21-K54	C.60

0340000000

0342000000	KLIPPON K1	B.133
0342100000	KLIPPON K2	B.135
0342200000	KLIPPON K3	B.137
0342300000	KLIPPON K4	B.140
0342400000	KLIPPON K5	B.142
0342500000	KLIPPON K6	B.145
0342600000	KLIPPON K7	B.147

0360000000

0360100000	TBF 19/15/14 7035	B.194
0360200000	TBF 30/19/18 7035	B.194
0360300000	TBF 30/30/18 7035	B.195
0360400000	TBF 37/30/18 7035	B.195
0360500000	TBF 60/30/18 7035	B.197
0360800000	MF TBF	B.194

0400000000

0407900000	IS 6 DIN 6911	E.22

0430000000

0433500000	SFNS5 VKMU M5 SW15	B.120

0480000000

0485100000	IS 4 DIN 6911	E.22

0490000000

0497600000	VG 36-MS54	C.9
0497700000	VG 42-MS54	C.9

0500000000

0500500000	TBF 19/15/14 trsp	B.194
0500600000	TBF 30/19/18 trsp	B.194
0500700000	TBF 30/30/18 trsp	B.195
0500800000	TBF 37/30/18 trsp	B.195
0500900000	TBF 60/30/21 trsp	B.197
0501100000	VP 29-MS65	C.61
0501160000	VP 29-K54	C.60
0501200000	VP 36-MS65	C.61
0501260000	VP 36-K54	C.60
0501300000	VP 42-MS65	C.61
0501360000	VP 42-K54	C.60

0520000000

0521500000	VG 7-MS54	C.9
0521600000	VP 7-MS65	C.61

0570000000

0573200000	KLIPPON K0	B.130
0573300000	KLIPPON K11	B.134
0573400000	KLIPPON K21	B.136
0573500000	KLIPPON K31	B.138
0573600000	KLIPPON K61	B.146
0573700000	KLIPPON K71	B.148

0640000000

0642600000	FKSC M6X8 D9/SW3	B.15

0880000000

0885410000	KSPM M20 BSC	C.65
0885420000	KSPM M25 BSC	C.65
0885430000	KSPM M32 BSC	C.65

Order No.	Type	Page
0885440000	KSPM M40 BSC	C.65
0885450000	KSPM M50 BSC	C.65
0886670000	KSPA M20 BNI	C.64
0886680000	KSPA M25 BNI	C.64
0886690000	KSPA M32 BNI	C.64
0886700000	KSPA M40 BNI	C.64
0886710000	KSPA M50 BNI	C.64
0886720000	KSPM M20 SSC	C.65
0886730000	KSPM M25 SSC	C.65
0886740000	KSPM M32 SSC	C.65
0886750000	KSPM M40 SSC	C.65
0887480000	KSPM M16 BSC	C.65
0887490000	KSPA M16 BNI	C.64
0887500000	KSPM M16 SSC	C.65

0890000000

0899750000	KSWF M20	C.54
0899770000	KSWF M25	C.54
0899780000	KSWN M40	C.53

0900000000

0900660000	KSWN M50	C.53
0905680000	PADLOCK KLIPPON TB SS	B.15

0930000000

0930001211	KDSU M20 BS O SC 1 G16	C.32
0930001212	KDSU M20 BS O SC 2 G16	C.32
0930001221	KDSU M20 BS O NI 1 G16	C.33
0930001222	KDSU M20 BS O NI 2 G16	C.33
0930011213	KDSU M20 BS O SC 1 G20S	C.32
0930011214	KDSU M20 BS O SC 2 G20S	C.32
0930011223	KDSU M20 BS O NI 1 G20S	C.33
0930011224	KDSU M20 BS O NI 2 G20S	C.33
0930021211	KDSU M20 BS O SC 1 G20	C.32
0930021212	KDSU M20 BS O SC 2 G20	C.32
0930021221	KDSU M20 BS O NI 1 G20	C.33
0930021222	KDSU M20 BS O NI 2 G20	C.33
0930031211	KDSU M25 BS O SC 1 G25	C.32
0930031212	KDSU M25 BS O SC 2 G25	C.32
0930031221	KDSU M25 BS O NI 1 G25	C.33
0930031222	KDSU M25 BS O NI 2 G25	C.33
0930041211	KDSU M32 BS O SC 1 G32	C.32
0930041212	KDSU M32 BS O SC 2 G32	C.32
0930041221	KDSU M32 BS O NI 1 G32	C.33
0930041222	KDSU M32 BS O NI 2 G32	C.33
0930051212	KDSU M40 BS O SC 2 G40	C.32
0930051222	KDSU M40 BS O NI 2 G40	C.33
0930061213	KDSU M50 BS O SC 1 G50S	C.32
0930061224	KDSU M50 BS O NI 2 G50S	C.33
0930091222	KDSU M63 BS O NI 2 G63	C.33
0930111212	KDSU M75 BS O SC 2 G75	C.32
0930481212	KSG M20 BS O SC 2 G16	C.43
0930481222	KSG M20 BS O NI 2 G16	C.43
0930491224	KSG M20 BS O NI 2 G20S	C.43
0930501212	KSG M20 BS O SC 2 G20	C.43
0930501222	KSG M20 BS O NI 2 G20	C.43
0930511212	KSG M25 BS O SC 2 G25	C.43
0930511222	KSG M25 BS O NI 2 G25	C.43
0930521212	KSG M32 BS O SC 2 G32	C.43
0930521222	KSG M32 BS O NI 2 G32	C.43
0930531212	KSG M40 BS O SC 2 G40	C.43
0930531222	KSG M40 BS O NI 2 G40	C.43
0930551212	KSG M50 BS O SC 2 G50	C.43
0930640001	SKMU M16 MS SC	C.49
0930640002	SKMU M20 MS SC	C.49
0930640003	SKMU M25 MS SC	C.49
0930640004	SKMU M32 MS SC	C.49
0930640005	SKMU M40 MS SC	C.49
0930640006	SKMU M50 MS SC	C.49
0930640007	SKMU M63 MS SC	C.49
0930640008	SKMU M75 MS SC	C.49
0930640009	SKMU M80 MS SC	C.49
0930640010	SKMU M85 MS SC	C.49
0930640011	SKMU M90 MS SC	C.49
0930700001	KSP L24 S	C.58
0930700002	KSP L30 S	C.58
0930700003	KSP L38 S	C.58
0930700004	KSP L46 S	C.58
0930700005	KSP L55 S	C.58
0930700006	KSP L65 S	C.58
0930700007	KSP L80 S	C.58
0930700008	KSP L90 S	C.58
0930710001	EA-RING MS/M16 SC	C.56
0930710002	EA-RING MS/M20 SC	C.56
0930710003	EA-RING MS/M25 SC	C.56
0930710004	EA-RING MS/M32 SC	C.56
0930710005	EA-RING MS/M40 SC	C.56
0930710006	EA-RING MS/M50 SC	C.56
0930710007	EA-RING MS/M63 SC	C.56
0930710008	EA-RING MS/M75 SC	C.56
0930730002	KSWN M20	C.53
0935110000	SP M6 10 S2	B.15
0935120000	SP M6 15 S2	B.15
0935130000	SP M6 20 S2	B.15
0935140000	SP M6 30 S2	B.15

Order No.	Type	Page

1000000000

1002690000	KLIPPON STB 1 SS	B.120
1002700000	KLIPPON STB 5 SS	B.126
1002710000	KLIPPON STB 4 SS	B.125
1002720000	KLIPPON STB 3 SS	B.124
1002730000	KLIPPON STB 2.1 SS	B.123
1002740000	KLIPPON STB 2 SS	B.122
1002750000	KLIPPON STB 1.1 SS	B.121
1002760000	KLIPPON STB 6 SS	B.127
1005190000	VGM16-MS54ZE BS4-10	C.13
1005200000	VGM16-MS54ZE BS6.5-12.5	C.13
1005210000	VGM20-MS54ZE BS1	C.13
1005220000	VGM20-MS54ZE BS6.5-15	C.13
1005230000	VGM25-MS54ZE BS9-19	C.13
1005240000	VGM32-MS54ZE BS17-27	C.13
1009560000	VG M20-MS54 ZR 4-13	C.10
1009570000	VG M25-MS54 ZR 8.5-18	C.10
1009580000	VG M32-MS54 ZR 16-26	C.10
1009590000	VG M40-MS54 ZR 23-30	C.10
1009600000	VG M50-MS54 ZR 32-40	C.10
1009610000	VGPG13.5-MS54ZR7.5-12.5	C.10
1009620000	VG PG16-MS54 ZR 7.5-15	C.10
1009630000	VG PG21-MS54 ZR 10-19	C.10
1009640000	VG PG29-MS54 ZR 18-27	C.10
1009650000	VG PG36-MS54 ZR 24-33	C.10
1009670000	VG PG42-MS54 ZR 30-39	C.10
1009740000	VG 7-SS 68 KB 3-6.5	C.17
1009750000	VG 9-SS 68 KB 4-8	C.17
1009760000	VG 11-SS 68 KB 5-10	C.17
1009780000	VG 16-SS 68 KB 10-14	C.17
1009790000	VG 21-SS 68 KB 13-18	C.17
1009800000	VG 29-SS 68 KB 18-25	C.17
1009810000	VG 36-SS 68 KB 22-32	C.17
1009820000	VG 42-SS 68 KB 30-38	C.17
1009830000	VG 48-SS 68 KB 34-44	C.17
1009840000	VGM12-SS 68 KB 3-6.5	C.17
1009850000	VGM16-SS 68 KB 4-8	C.17
1009860000	VGM20-SS 68 KB 6-12	C.17
1009870000	VGM25-SS 68 KB 10-14	C.17
1009880000	VGM32-SS 68 KB 13-18	C.17
1009890000	VGM40-SS 68 KB 18-25	C.17
1009900000	VGM50-SS 68 KB 22-32	C.17
1009910000	VGM63-SS 68 KB 34-44	C.17

1020000000

1024970000	KLIPPON STB 1 MS HT	B.120
1024980000	KLIPPON STB 1.1 MS HT	B.121
1024990000	KLIPPON STB 2 MS HT	B.122
1025010000	KLIPPON STB 2.1 MS HT	B.123
1025020000	KLIPPON STB 3 MS HT	B.124
1025030000	KLIPPON STB 4 MS HT	B.125
1025040000	KLIPPON STB 5 MS HT	B.126
1025050000	KLIPPON STB 6 MS HT	B.127

1030000000

1039850000	CABTITE KEL-DP 24/14	D.7
1039870000	CABTITE KEL-DP 24/17	D.7
1039890000	CABTITE KEL-DP 24/19	D.7
1039930000	CABTITE KEL-DP 24/26	D.7
1039940000	CABTITE KEL-DP 24/48	D.7
1039950000	CABTITE KEL-DP 24/50	D.7
1039960000	CABTITE KZL 140 TS39	D.9
1039970000	CABTITE KZL 80 TS35	D.9
1039990000	CABTITE KZL 39 TS35	D.9

1040000000

1040030000	CABTITE KZL 140 C	D.9
1040060000	CABTITE KZL 80 C	D.9
1040080000	CABTITE KZL 39 C	D.9
1040120000	CABTITE KEL-DP 32/10/2	D.7
1040130000	CABTITE KEL-DP 50/9/2	D.7
1040160000	CABTITE KEL-DP 50/12/2	D.7
1040180000	CABTITE KEL-DP 50/16/2	D.7
1040210000	CABTITE KEL-DP 50/18/2	D.7
1040240000	CABTITE KEL-DP 50/20/2	D.7
1040310000	CABTITE KEL-DP 32/10	D.7
1040320000	CABTITE KEL-DP 50/9	D.7
1040330000	CABTITE KEL-DP 50/12	D.7
1040350000	CABTITE KEL-DP 50/16	D.7
1040360000	CABTITE KEL-DP 50/18	D.7
1040370000	CABTITE KEL-DP 50/20	D.7
1048170000	CABTITE KEL B1	D.6
1048180000	CABTITE KEL B4	D.6
1048190000	CABTITE KEL SNAP B4	D.6

1050000000

1058810000	KLIPPON STB 1 SS E	B.120
1058820000	KLIPPON STB 1.1 SS E	B.121
1058830000	KLIPPON STB 2 SS E	B.122
1058840000	KLIPPON STB 2.1 SS E	B.123
1058850000	KLIPPON STB 3 SS E	B.124
1058860000	KLIPPON STB 4 SS E	B.125
1058870000	KLIPPON STB 6 SS E	B.127
1058880000	KLIPPON STB 5 SS E	B.126

Order No.	Type	Page

1070000000

1074480000	KDSW M20 BN O SC 1 G16	C.34
1074490000	KDSW M20BN O SC 2 G16	C.34
1074500000	KDSW M20 BN O SC 1 G20S	C.34
1074510000	KDSW M20 BN O SC 2 G20S	C.34
1074520000	KDSW M20 BN O SC 1 G20	C.34
1074530000	KDSW M20 BN O SC 2 G20	C.34
1074540000	KDSW M25 BN O SC 1 G25	C.34
1074550000	KDSW M25 BN O SC 2 G25	C.34
1074570000	KDSW M32 BN O SC 1 G32	C.34
1074580000	KDSW M32 BN O SC 2 G32	C.34
1074590000	KDSW M40 BN O SC 1 G40	C.34
1074610000	KDSW M40 BN O SC 2 G40	C.34
1074620000	KDSW M50 BN O SC 1 G50S	C.34
1074630000	KDSW M50 BN O SC 2 G50S	C.34
1074640000	KDSW M50 BN O SC 1 G50	C.34
1074650000	KDSW M50 BN O SC 2 G50	C.34
1074660000	KDSW M20 BN L NI 1 G16	C.39
1074670000	KDSW M63 BN O SC 1 G63S	C.34
1074690000	KDSW M20 BN L NI 2 G16	C.39
1074710000	KDSW M63 BN O SC 2 G63S	C.34
1074720000	KDSW M20 BN L NI 1 G20S	C.39
1074730000	KDSW M63 BN O SC 1 G63	C.34
1074740000	KDSW M20 BN L NI 2 G20S	C.39
1074750000	KDSW M63 BN O SC 2 G63	C.34
1074760000	KDSW M20 BN L NI 1 G20	C.39
1074770000	KDSW M75 BN O SC 1 G75S	C.34
1074780000	KDSW M20 BN L NI 2 G20	C.39
1074790000	KDSW M75 BN O SC 2 G75S	C.34
1074810000	KDSW M25 BN L NI 1 G25	C.39
1074820000	KDSW M75 BN O SC 1 G75	C.34
1074830000	KDSW M25 BN L NI 2 G25	C.39
1074840000	KDSW M75 BN O SC 2 G75	C.34
1074850000	KDSW M32 BN L NI 1 G32	C.39
1074860000	KDSW M32 BN L NI 2 G32	C.39
1074870000	KDSW M40 BN L NI 1 G40	C.39
1074880000	KDSW M40 BN L NI 2 G40	C.39
1074890000	KDSW M50 BN L NI 1 G50S	C.39
1074910000	KDSW M50 BN L NI 2 G50S	C.39
1074920000	KDSW M50 BN L NI 1 G50	C.39
1074930000	KDSW M50 BN L NI 2 G50	C.39
1074940000	KDSW M63 BN L NI 1 G63S	C.39
1074950000	KDSW M63 BN L NI 2 G63S	C.39
1074960000	KDSW M63 BN L NI 1 G63	C.39
1074970000	KDSW M63 BN L NI 2 G63	C.39
1074980000	KDSW M75 BN L NI 1 G75S	C.39
1074990000	KDSW M75 BN L NI 2 G75S	C.39
1075010000	KDSW M75 BN L NI 1 G75	C.39
1075020000	KDSW M75 BN L NI 2 G75	C.39
1075030000	KDSW M20 BN O NI 1 G16	C.35
1075040000	KDSW M20 BN O NI 2 G16	C.35
1075050000	KDSW M20 BN O NI 1 G20S	C.35
1075060000	KDSW M20 BN O NI 2 G20S	C.35
1075070000	KDSW M20 BN O NI 1 G20	C.35
1075080000	KDSW M20 BN O NI 2 G20	C.35
1075090000	KDSW M25 BN O NI 1 G25	C.35
1075110000	KDSW M25 BN O NI 2 G25	C.35
1075120000	KDSW M32 BN O NI 1 G32	C.35
1075130000	KDSW M32 BN O NI 2 G32	C.35
1075140000	KDSW M40 BN O NI 1 G40	C.35
1075150000	KDSW M40 BN O NI 2 G40	C.35
1075160000	KDSW M50 BN O NI 1 G50S	C.35
1075170000	KDSW M50 BN O NI 2 G50S	C.35
1075180000	KDSW M50 BN O NI 1 G50	C.35
1075190000	KDSW M50 BN O NI 2 G50	C.35
1075210000	KDSW M63 BN O NI 1 G63S	C.35
1075220000	KDSW M63 BN O NI 2 G63S	C.35
1075230000	KDSW M63 BN O NI 1 G63	C.35
1075240000	KDSW M63 BN O NI 2 G63	C.35
1075250000	KDSW M75 BN O NI 1 G75S	C.35
1075260000	KDSW M75 BN O NI 2 G75S	C.35
1075270000	KDSW M75 BN O NI 1 G75	C.35
1075280000	KDSW M75 BN O NI 2 G75	C.35
1075330000	KSG M75 BN O SC 2 G75S	C.42
1075340000	KSG M75 BN O SC 2 G75	C.42
1075350000	KSG M75 BN O NI 2 G75S	C.42
1075360000	KSG M75 BN O NI 2 G75	C.42
1075370000	KSPA M63 BNI	C.64
1075380000	KSPA M75 BNI	C.64
1075480000	KSPM M63 BSC	C.65
1075490000	KSPM M75 BSC	C.65
1075510000	KSPM M50 SSC	C.65
1075520000	KSPM M63 SSC	C.65
1075530000	KSPM M75 SSC	C.65
1076120000	KDSU M20 BN O SC 1 G16	C.30
1076130000	KDSU M20 BN O SC 1 G20S	C.30
1076140000	KDSU M20 BN O SC 1 G20	C.30
1076150000	KDSU M25 BN O SC 1 G25	C.30
1076160000	KDSU M32 BN O SC 1 G32	C.30
1076170000	KDSU M40 BN O SC 1 G40	C.30
1076180000	KDSU M50 BN O SC 1 G50S	C.30
1076190000	KDSU M50 BN O SC 1 G50	C.30
1076200000	KDSU M63 BN O SC 1 G63S	C.30
1076210000	KDSU M63 BN O SC 1 G63	C.30
1076220000	KDSU M75 BN O SC 1 G75S	C.30
1076230000	KDSU M75 BN O SC 2 G75S	C.30
1076240000	KDSU M75 BN O SC 1 G75	C.30
1076250000	KDSW M20 BN L SC 1 G16	C.38

Order No.	Type	Page
1076260000	KDSU M75 BN O SC 2 G75	C.30
1076270000	KDSW M20 BN L SC 2 G16	C.38
1076280000	KDSW M20 BN L SC 1 G20S	C.38
1076290000	KDSW M20 BN L SC 2 G20S	C.38
1076300000	KDSW M20 BN L SC 1 G20	C.38
1076310000	KDSW M20 BN L SC 2 G20	C.38
1076320000	KDSW M25 BN L SC 1 G25	C.38
1076330000	KDSW M25 BN L SC 2 G25	C.38
1076340000	KDSW M32 BN L SC 1 G32	C.38
1076350000	KDSW M32 BN L SC 2 G32	C.38
1076360000	KDSW M40 BN L SC 1 G40	C.38
1076370000	KDSW M40 BN L SC 2 G40	C.38
1076380000	KDSW M50 BN L SC 1 G50S	C.38
1076390000	KDSW M50 BN L SC 2 G50S	C.38
1076400000	KDSW M50 BN L SC 1 G50	C.38
1076410000	KDSW M50 BN L SC 2 G50	C.38
1076420000	KDSW M63 BN L SC 1 G63S	C.38
1076430000	KDSW M63 BN L SC 2 G63S	C.38
1076440000	KDSW M63 BN L SC 1 G63	C.38
1076450000	KDSW M63 BN L SC 2 G63	C.38
1076460000	KDSW M75 BN L SC 1 G75S	C.38
1076470000	KDSW M75 BN L SC 2 G75S	C.38
1076480000	KDSW M75 BN L SC 1 G75	C.38
1076490000	KDSW M75 BN L SC 2 G75	C.38
1076630000	KSWN M16	C.53
1076640000	KSWN M25	C.53
1076650000	KSWN M32	C.53
1076660000	KSWN M63	C.53
1076670000	KSWN M75	C.53
1076680000	KSWF M16	C.54
1076690000	KSWF M32	C.54
1076710000	KSWF M40	C.54
1076720000	KSWF M50	C.54
1076730000	KSWF M63	C.54
1076740000	KSWF M75	C.54
1076750000	KSP EL46	C.57
1076760000	KSP EL55	C.57
1076770000	KSP EL65	C.57
1076780000	KSP EL80	C.57
1076790000	KSP EL90	C.57

1080000000

1083280000	KDSU M20 BN O NI 1 G16	C.31
1083290000	KDSU M20 BN O NI 1 G20S	C.31
1083320000	KDSU M20 BN O NI 1 G20	C.31
1083330000	KDSU M25 BN O NI 1 G25	C.31
1083340000	KDSU M32 BN O NI 1 G32	C.31
1083350000	KDSU M40 BN O NI 1 G40	C.31
1083360000	KDSU M50 BN O NI 1 G50S	C.31
1083370000	KDSU M50 BN O NI 1 G50	C.31
1083380000	KDSU M63 BN O NI 1 G63S	C.31
1083390000	KDSU M63 BN O NI 1 G63	C.31
1083400000	KDSU M75 BN O NI 1 G75S	C.31
1083410000	KDSU M75 BN O NI 2 G75S	C.31
1083420000	KDSU M75 BN O NI 1 G75	C.31
1083430000	KDSU M75 BN O NI 2 G75	C.31

1090000000

1095100000	KUB M20 BS O NI 1 G16	C.45
1095110000	KUB M20 BS O NI 2 G16	C.45
1095120000	KUB M20 BS O NI 1 G20S	C.45
1095130000	KUB M20 BS O NI 2 G20S	C.45
1095140000	KUB M20 BS O NI 1 G20	C.45
1095150000	KUB M20 BS O NI 2 G20	C.45
1095160000	KUB M25 BS O NI 1 G25	C.45
1095170000	KUB M25 BS O NI 2 G25	C.45
1095180000	KUB M32 BS O NI 1 G32	C.45
1095190000	KUB M32 BS O NI 2 G32	C.45
1095200000	KUB M40 BS O NI 1 G40	C.45
1095210000	KUB M40 BS O NI 2 G40	C.45
1095220000	KUB M50 BS O NI 1 G50S	C.45
1095230000	KUB M50 BS O NI 2 G50S	C.45
1095240000	KUB M50 BS O NI 1 G50	C.45
1095250000	KUB M50 BN O NI 2 G50	C.45
1095260000	KUB M63 BS O NI 1 G63S	C.45
1095270000	KUB M63 BS O NI 2 G63S	C.45
1095280000	KUB M63 BS O NI 1 G63	C.45
1095290000	KUB M63 BS O NI 2 G63	C.45
1095300000	KUB M75 BS O NI 1 G75S	C.45
1095310000	KUB M75 BS O NI 2 G75S	C.45
1095320000	KUB M75 BS O NI 1 G75	C.45
1095330000	KUB M75 BS O NI 2 G75	C.45
1095340000	KUB M20 BS O SC 1 G16	C.44
1095350000	KUB M20 BS O SC 2 G16	C.44
1095360000	KUB M20 BS O SC 1 G20S	C.44
1095370000	KUB M20 BS O SC 2 G20S	C.44
1095380000	KUB M20 BS O SC 1 G20	C.44
1095390000	KUB M20 BS O SC 2 G20	C.44
1095400000	KUB M25 BS O SC 1 G25	C.44
1095410000	KUB M25 BS O SC 2 G25	C.44
1095420000	KUB M32 BS O SC 1 G32	C.44
1095430000	KUB M32 BS O SC 2 G32	C.44
1095440000	KUB M40 BS O SC 1 G40	C.44
1095450000	KUB M40 BS O SC 2 G40	C.44
1095460000	KUB M50 BS O SC 1 G50S	C.44
1095470000	KUB M50 BS O SC 2 G50S	C.44
1095480000	KUB M50 BS O SC 1 G50	C.44
1095490000	KUB M50 BS O SC 2 G50	C.44
1095500000	KUB M63 BS O SC 1 G63S	C.44
1095510000	KUB M63 BS O SC 2 G63S	C.44
1095520000	KUB M63 BS O SC 1 G63	C.44
1095530000	KUB M63 BS O SC 2 G63	C.44
1095540000	KUB M75 BS O SC 1 G75S	C.44
1095550000	KUB M75 BS O SC 2 G75S	C.44
1095560000	KUB M75 BS O SC 1 G75	C.44
1095570000	KUB M75 BS O SC 2 G75	C.44

1120000000

1128540000	SDI Set S2.5-5.5/PZ1/2	E.16

1130000000

1135240000	IE-KOK-V14	E.6
1135650000	KDSX M20 BS O SC 1 G16	C.40
1135660000	KDSX M20 BS O SC 2 G16	C.40
1135670000	KDSX M20 BS O SC 1 G20S	C.40
1135680000	KDSX M20 BS O SC 2 G20S	C.40
1135690000	KDSX M20 BS O SC 1 G20	C.40
1135710000	KDSX M20 BS O SC 2 G20	C.40
1135720000	KDSX M25 BS O SC 1 G25	C.40
1135730000	KDSX M25 BS O SC 2 G25	C.40
1135740000	KDSX M32 BS O SC 1 G32	C.40
1135750000	KDSX M32 BS O SC 2 G32	C.40
1135760000	KDSX M40 BS O SC 1 G40	C.40
1135770000	KDSX M40 BS O SC 2 G40	C.40
1135780000	KDSX M50 BS O SC 1 G50S	C.40
1135790000	KDSX M50 BS O SC 2 G50S	C.40
1135800000	KDSX M50 BS O SC 1 G50	C.40
1135810000	KDSX M50 BS O SC 2 G50	C.40
1135820000	KDSX M63 BS O SC 1 G63S	C.40
1135830000	KDSX M63 BS O SC 2 G63S	C.40
1135840000	KDSX M63 BS O SC 1 G63	C.40
1135850000	KDSX M63 BS O SC 2 G63	C.40
1135860000	KDSX M75 BS O SC 1 G75S	C.40
1135870000	KDSX M75 BS O SC 2 G75S	C.40
1135880000	KDSX M75 BS O SC 1 G75	C.40
1135890000	KDSX M75 BS O SC 2 G75	C.40
1135910000	KDSX M20 BS O NI 1 G16	C.41
1135920000	KDSX M20 BS O NI 2 G16	C.41
1135930000	KDSX M20 BS O NI 1 G20S	C.41
1135940000	KDSX M20 BS O NI 2 G20S	C.41
1135950000	KDSX M20 BS O NI 1 G20	C.41
1135960000	KDSX M20 BS O NI 2 G20	C.41
1135970000	KDSX M25 BS O NI 1 G25	C.41
1135980000	KDSX M25 BS O NI 2 G25	C.41
1135990000	KDSX M32 BS O NI 1 G32	C.41
1136000000	KDSX M32 BS O NI 2 G32	C.41
1136010000	KDSX M40 BS O NI 1 G40	C.41
1136020000	KDSX M40 BS O NI 2 G40	C.41
1136030000	KDSX M50 BS O NI 1 G50S	C.41
1136040000	KDSX M50 BS O NI 2 G50S	C.41
1136050000	KDSX M50 BS O NI 1 G50	C.41
1136060000	KDSX M50 BS O NI 2 G50	C.41
1136070000	KDSX M63 BS O NI 1 G63S	C.41
1136080000	KDSX M63 BS O NI 2 G63S	C.41
1136090000	KDSX M63 BS O NI 1 G63	C.41
1136110000	KDSX M63 BS O NI 2 G63	C.41
1136120000	KDSX M75 BS O NI 1 G75S	C.41
1136130000	KDSX M75 BS O NI 2 G75S	C.41
1136140000	KDSX M75 BS O NI 1 G75	C.41
1136150000	KDSX M75 BS O NI 2 G75	C.41
1136160000	KDSW M20 BS O SC 1 G16	C.36
1136170000	KDSW M20 BS O SC 2 G16	C.36
1136180000	KDSW M20 BS O SC 1 G20S	C.36
1136190000	KDSW M20 BS O SC 2 G20S	C.36
1136200000	KDSW M20 BS O SC 1 G20	C.36
1136210000	KDSW M20 BS O SC 2 G20	C.36
1136220000	KDSW M25 BS O SC 1 G25	C.36
1136230000	KDSW M25 BS O SC 2 G25	C.36
1136240000	KDSW M32 BS O SC 1 G32	C.36
1136250000	KDSW M32 BS O SC 2 G32	C.36
1136260000	KDSW M40 BS O SC 1 G40	C.36
1136270000	KDSW M40 BS O SC 2 G40	C.36
1136280000	KDSW M50 BS O SC 1 G50S	C.36
1136290000	KDSW M50 BS O SC 2 G50S	C.36
1136310000	KDSW M50 BS O SC 1 G50	C.36
1136320000	KDSW M50 BS O SC 2 G50	C.36
1136330000	KDSW M63 BS O SC 1 G63S	C.36
1136340000	KDSW M63 BS O SC 2 G63S	C.36
1136350000	KDSW M63 BS O SC 1 G63	C.36
1136360000	KDSW M63 BS O SC 2 G63	C.36
1136370000	KDSW M75 BS O SC 1 G75S	C.36
1136380000	KDSW M75 BS O SC 2 G75S	C.36
1136390000	KDSW M75 BS O SC 1 G75	C.36
1136400000	KDSW M75 BS O SC 2 G75	C.36
1136410000	KDSW M20 BS O NI 1 G16	C.37
1136420000	KDSW M20 BS O NI 2 G16	C.37
1136430000	KDSW M20 BS O NI 1 G20S	C.37
1136440000	KDSW M20 BS O NI 2 G20S	C.37
1136450000	KDSW M20 BS O NI 1 G20	C.37
1136460000	KDSW M20 BS O NI 2 G20	C.37
1136470000	KDSW M25 BS O NI 1 G25	C.37
1136480000	KDSW M25 BS O NI 2 G25	C.37
1136490000	KDSW M32 BS O NI 1 G32	C.37
1136510000	KDSW M32 BS O NI 2 G32	C.37
1136520000	KDSW M40 BS O NI 1 G40	C.37
1136530000	KDSW M40 BS O NI 2 G40	C.37
1136540000	KDSW M50 BS O NI 1 G50S	C.37
1136550000	KDSW M50 BS O NI 2 G50S	C.37
1136560000	KDSW M50 BS O NI 1 G50	C.37
1136570000	KDSW M50 BS O NI 2 G50	C.37
1136580000	KDSW M63 BS O NI 1 G63S	C.37
1136590000	KDSW M63 BS O NI 2 G63S	C.37
1136600000	KDSW M63 BS O NI 1 G63	C.37
1136610000	KDSW M63 BS O NI 2 G63	C.37
1136620000	KDSW M75 BS O NI 1 G75S	C.37
1136630000	KDSW M75 BS O NI 2 G75S	C.37
1136640000	KDSW M75 BS O NI 1 G75	C.37
1136650000	KDSW M75 BS O NI 2 G75	C.37
1136660000	KSG M50 BS O NI 2 G50S	C.43
1136670000	KSG M50 BS O NI 2 G50	C.43
1136680000	KSG M63 BS O NI 2 G63S	C.43
1136690000	KSG M63 BS O NI 2 G63	C.43
1136700000	KSG M75 BS O NI 2 G75S	C.43
1136710000	KSG M75 BS O NI 2 G75	C.43
1136720000	KSG M20 BS O SC 2 G20S	C.43
1136730000	KSG M50 BS O SC 2 G50S	C.43
1136740000	KSG M63 BS O SC 2 G63S	C.43
1136750000	KSG M63 BS O SC 2 G63	C.43
1136760000	KSG M75 BS O SC 2 G75S	C.43
1136770000	KSG M75 BS O SC 2 G75	C.43
1136870000	KDSU M40 BS O SC 1 G40	C.32
1136880000	KDSU M50 BS O SC 2 G50S	C.32
1136890000	KDSU M50 BS O SC 1 G50	C.32
1136910000	KDSU M50 BS O SC 2 G50	C.32
1136920000	KDSU M63 BS O SC 1 G63S	C.32
1136930000	KDSU M63 BS O SC 2 G63S	C.32
1136940000	KDSU M63 BS O SC 1 G63	C.32
1136950000	KDSU M63 BS O SC 2 G63	C.32
1136960000	KDSU M75 BS O SC 1 G75S	C.32
1136970000	KDSU M75 BS O SC 2 G75S	C.32
1136980000	KDSU M75 BS O SC 1 G75	C.32
1136990000	KDSU M40 BS O NI 1 G40	C.33
1137000000	KDSU M50 BS O NI 1 G50S	C.33
1137010000	KDSU M50 BS O NI 1 G50	C.33
1137020000	KDSU M50 BS O NI 2 G50	C.33
1137030000	KDSU M63 BS O NI 1 G63S	C.33
1137040000	KDSU M63 BS O NI 2 G63S	C.33
1137050000	KDSU M63 BS O NI 1 G63	C.33
1137060000	KDSU M75 BS O NI 1 G75S	C.33
1137070000	KDSU M75 BS O NI 2 G75S	C.33
1137080000	KDSU M75 BS O NI 1 G75	C.33
1137090000	KDSU M75 BS O NI 2 G75	C.33

1190000000

1191590000	KTB QLL S2 DB3	B.93
1191600000	KTB QLL S2 SLS	B.93
1192690000	PEBZ M10 KTB S4 SET	B.15
1192790000	KSP L114 S	C.58
1192820000	KSWF M90	C.54
1193810000	KTB MOPL 2215 S2N	B.15
1193820000	KTB MOPL 2626 S2N	B.16
1193830000	KTB MOPL 3030 S2N	B.18
1193840000	KTB MOPL 3526 S2N	B.20
1193850000	KTB MOPL 4030 S2N	B.22
1193860000	KTB MOPL 4538 S2N	B.24
1193870000	KTB MOPL 4848 S2N	B.26
1193880000	KTB MOPL 5535 S2N	B.28
1193890000	KTB MOPL 6245 S2N	B.30
1193900000	KTB MOPL 7650 S2N	B.32
1193910000	KTB MOPL 9161 S2N	B.34
1193920000	KTB MOPL 9874 S2N	B.36
1193930000	KTB MOPL 2215 MSZN	B.15
1193940000	KSP L 104 S	C.58
1193950000	KTB MOPL 2626 MSZN	B.16
1193960000	KTB MOPL 3030 MSZN	B.18
1193970000	KTB MOPL 3526 MSZN	B.20
1193980000	KTB MOPL 4030 MSZN	B.22
1193990000	KTB MOPL 4538 MSZN	B.24
1194000000	KTB MOPL 4848 MSZN	B.26
1194010000	KTB MOPL 5535 MSZN	B.28
1194020000	KTB MOPL 6245 MSZN	B.30
1194030000	KTB MOPL 7650 MSZN	B.32
1194040000	KTB MOPL 9161 MSZN	B.34
1194050000	KTB MOPL 9874 MSZN	B.36
1194560000	KTB MH 221513 S4E1	B.15
1194570000	KTB MH 221513 S4E2	B.15
1194580000	KTB MH 221513 S4E3	B.15
1194590000	KTB MH 221513 S4E4	B.15
1194610000	KTB MH 262615 S4E1	B.16
1194620000	KTB MH 262615 S4E2	B.16
1194630000	KTB MH 262615 S4E3	B.16
1194640000	KTB MH 262615 S4E4	B.16
1194660000	KTB MH 262620 S4E1	B.17
1194670000	KTB MH 262620 S4E2	B.17
1194680000	KTB MH 262620 S4E3	B.17
1194690000	KTB MH 262620 S4E4	B.17
1194710000	KTB MH 303015 S4E1	B.18
1194720000	KTB MH 303015 S4E2	B.18
1194730000	KTB MH 303015 S4E3	B.18
1194740000	KTB MH 303015 S4E4	B.18
1194760000	KTB MH 303020 S4E1	B.19
1194770000	KTB MH 303020 S4E2	B.19
1194780000	KTB MH 303020 S4E3	B.19
1194790000	KTB MH 303020 S4E4	B.19
1194810000	KTB MH 352615 S4E1	B.20
1194820000	KTB MH 352615 S4E2	B.20
1194830000	KTB MH 352615 S4E3	B.20
1194840000	KTB MH 352615 S4E4	B.20
1194860000	KTB MH 352620 S4E1	B.21
1194870000	KTB MH 352620 S4E2	B.21
1194880000	KTB MH 352620 S4E3	B.21
1194890000	KTB MH 352620 S4E4	B.21
1194910000	KTB MH 403015 S4E1	B.22
1194920000	KTB MH 403015 S4E2	B.22
1194930000	KTB MH 403015 S4E3	B.22
1194940000	KTB MH 403015 S4E4	B.22
1194960000	KTB MH 403020 S4E1	B.23
1194970000	KTB MH 403020 S4E2	B.23
1194980000	KTB MH 403020 S4E3	B.23
1194990000	KTB MH 403020 S4E4	B.23
1195010000	KTB MH 453815 S4E1	B.24
1195020000	KTB MH 453815 S4E2	B.24
1195030000	KTB MH 453815 S4E3	B.24
1195040000	KTB MH 453815 S4E4	B.24
1195060000	KTB MH 453820 S4E1	B.25
1195070000	KTB MH 453820 S4E2	B.25
1195080000	KTB MH 453820 S4E3	B.25
1195090000	KTB MH 453820 S4E4	B.25
1195110000	KTB MH 484815 S4E1	B.26
1195120000	KTB MH 484815 S4E2	B.26
1195130000	KTB MH 484815 S4E3	B.26
1195140000	KTB MH 484815 S4E4	B.26
1195160000	KTB MH 484820 S4E1	B.27
1195170000	KTB MH 484820 S4E2	B.27
1195180000	KTB MH 484820 S4E3	B.27
1195190000	KTB MH 484820 S4E4	B.27
1195210000	KTB MH 553515 S4E1	B.28
1195220000	KTB MH 553515 S4E2	B.28
1195230000	KTB MH 553515 S4E3	B.28
1195240000	KTB MH 553515 S4E4	B.28
1195260000	KTB MH 553520 S4E1	B.29
1195270000	KTB MH 553520 S4E2	B.29
1195280000	KTB MH 553520 S4E3	B.29
1195290000	KTB MH 553520 S4E4	B.29
1195310000	KTB MH 624515 S4E1	B.30
1195320000	KTB MH 624515 S4E2	B.30
1195330000	KTB MH 624515 S4E3	B.30
1195340000	KTB MH 624515 S4E4	B.30
1195360000	KTB MH 624520 S4E1	B.31
1195370000	KTB MH 624520 S4E2	B.31
1195380000	KTB MH 624520 S4E3	B.31
1195390000	KTB MH 624520 S4E4	B.31
1195410000	KTB MH 765015 S4E1	B.32
1195420000	KTB MH 765015 S4E2	B.32
1195430000	KTB MH 765015 S4E3	B.32
1195440000	KTB MH 765015 S4E4	B.32
1195460000	KTB MH 765020 S4E1	B.33
1195470000	KTB MH 765020 S4E2	B.33
1195480000	KTB MH 765020 S4E3	B.33
1195490000	KTB MH 765020 S4E4	B.33
1195510000	KTB MH 916115 S4E1	B.34
1195520000	KTB MH 916115 S4E2	B.34
1195530000	KTB MH 916115 S4E3	B.34
1195540000	KTB MH 916115 S4E4	B.34
1195560000	KTB MH 916120 S4E1	B.35
1195570000	KTB MH 916120 S4E2	B.35
1195580000	KTB MH 916120 S4E3	B.35
1195590000	KTB MH 916120 S4E4	B.35
1195610000	KTB MH 987420 S4E1	B.36
1195620000	KTB MH 987420 S4E2	B.36
1195630000	KTB MH 987420 S4E3	B.36
1195640000	KTB MH 987420 S4E4	B.36
1195660000	KTB FS 221513 S4E1	B.67
1195670000	KTB FS 221513 S4E2	B.67
1195680000	KTB FS 221513 S4E3	B.67
1195690000	KTB FS 221513 S4E4	B.67
1195710000	KTB FS 262615 S4E1	B.68
1195720000	KTB FS 262615 S4E2	B.68
1195730000	KTB FS 262615 S4E3	B.68
1195740000	KTB FS 262615 S4E4	B.68
1195760000	KTB FS 262620 S4E1	B.69
1195770000	KTB FS 262620 S4E2	B.69
1195780000	KTB FS 262620 S4E3	B.69
1195790000	KTB FS 262620 S4E4	B.69
1195810000	KTB FS 303015 S4E1	B.70
1195820000	KTB FS 303015 S4E2	B.70
1195830000	KTB FS 303015 S4E3	B.70
1195840000	KTB FS 303015 S4E4	B.70
1195860000	KTB FS 303020 S4E1	B.71
1195870000	KTB FS 303020 S4E2	B.71
1195880000	KTB FS 303020 S4E3	B.71
1195890000	KTB FS 303020 S4E4	B.71
1195910000	KTB FS 352615 S4E1	B.72
1195920000	KTB FS 352615 S4E2	B.72
1195930000	KTB FS 352615 S4E3	B.72
1195940000	KTB FS 352615 S4E4	B.72
1195960000	KTB FS 352620 S4E1	B.73
1195970000	KTB FS 352620 S4E2	B.73
1195980000	KTB FS 352620 S4E3	B.73
1195990000	KTB FS 352620 S4E4	B.73
1196010000	KTB FS 403015 S4E1	B.74

Order No.	Type	Page
1196020000	KTB FS 403015 S4E2	B.74
1196030000	KTB FS 403015 S4E3	B.74
1196040000	KTB FS 403015 S4E4	B.74
1196060000	KTB FS 403020 S4E1	B.75
1196070000	KTB FS 403020 S4E2	B.75
1196080000	KTB FS 403020 S4E3	B.75
1196090000	KTB FS 403020 S4E4	B.75
1196110000	KTB FS 453815 S4E1	B.76
1196120000	KTB FS 453815 S4E2	B.76
1196130000	KTB FS 453815 S4E3	B.76
1196140000	KTB FS 453815 S4E4	B.76
1196160000	KTB FS 453820 S4E1	B.77
1196170000	KTB FS 453820 S4E2	B.77
1196180000	KTB FS 453820 S4E3	B.77
1196190000	KTB FS 453820 S4E4	B.77
1196210000	KTB FS 484815 S4E1	B.78
1196220000	KTB FS 484815 S4E2	B.78
1196230000	KTB FS 484815 S4E3	B.78
1196240000	KTB FS 484815 S4E4	B.78
1196260000	KTB FS 484820 S4E1	B.79
1196270000	KTB FS 484820 S4E2	B.79
1196280000	KTB FS 484820 S4E3	B.79
1196290000	KTB FS 484820 S4E4	B.79
1196310000	KTB FS 553515 S4E1	B.80
1196320000	KTB FS 553515 S4E2	B.80
1196330000	KTB FS 553515 S4E3	B.80
1196340000	KTB FS 553515 S4E4	B.80
1196360000	KTB FS 553520 S4E1	B.81
1196370000	KTB FS 553520 S4E2	B.81
1196380000	KTB FS 553520 S4E3	B.81
1196390000	KTB FS 553520 S4E4	B.81
1196410000	KTB FS 624515 S4E1	B.82
1196420000	KTB FS 624515 S4E2	B.82
1196430000	KTB FS 624515 S4E3	B.82
1196440000	KTB FS 624515 S4E4	B.82
1196460000	KTB FS 624520 S4E1	B.83
1196470000	KTB FS 624520 S4E2	B.83
1196480000	KTB FS 624520 S4E3	B.83
1196490000	KTB FS 624520 S4E4	B.83
1196510000	KTB FS 765015 S4E1	B.84
1196520000	KTB FS 765015 S4E2	B.84
1196530000	KTB FS 765015 S4E3	B.84
1196540000	KTB FS 765015 S4E4	B.84
1196560000	KTB FS 765020 S4E1	B.85
1196570000	KTB FS 765020 S4E2	B.85
1196580000	KTB FS 765020 S4E3	B.85
1196590000	KTB FS 765020 S4E4	B.85
1196610000	KTB FS 916115 S4E1	B.86
1196620000	KTB FS 916115 S4E2	B.86
1196630000	KTB FS 916115 S4E3	B.86
1196640000	KTB FS 916115 S4E4	B.86
1196660000	KTB FS 916120 S4E1	B.87
1196670000	KTB FS 916120 S4E2	B.87
1196680000	KTB FS 916120 S4E3	B.87
1196690000	KTB FS 916120 S4E4	B.87
1196710000	KTB FS 987420 S4E1	B.88
1196720000	KTB FS 987420 S4E2	B.88
1196730000	KTB FS 987420 S4E3	B.88
1196740000	KTB FS 987420 S4E4	B.88
1197200000	KTBI FS 302015 S2E0	B.107
1197210000	KTBI FS 302015 S2E1	B.107
1197220000	KTBI FS 303015 S2E0	B.108
1197230000	KTBI FS 303015 S2E1	B.108
1197240000	KTBI FS 303022 S2E0	B.109
1197250000	KTBI FS 303022 S2E1	B.109
1197260000	KTBI FS 403015 S2E0	B.110
1197270000	KTBI FS 403015 S2E1	B.110
1197280000	KTBI FS 403022 S2E0	B.111
1197290000	KTBI FS 403022 S2E1	B.111
1197300000	KTBI FS 404022 S2E0	B.112
1197310000	KTBI FS 404022 S2E1	B.112
1197320000	KTBI FS 504022 S2E0	B.113
1197330000	KTBI FS 504022 S2E1	B.113
1197340000	KTBI FS 505022 S2E0	B.114
1197350000	KTBI FS 505022 S2E1	B.114
1197360000	KTBI FS 604022 S2E0	B.115
1197370000	KTBI FS 604022 S2E1	B.115
1197380000	KTBI FS 606022 S2E0	B.116
1197390000	KTBI FS 606022 S2E1	B.116
1197400000	KTBI FS 806022 S2E0	B.117
1197410000	KTBI FS 806022 S2E1	B.117
1197430000	KTBI QL 302015 S2E0	B.93
1197440000	KTBI QL 302015 S2E1	B.93
1197450000	KTBI QL 303015 S2E0	B.94
1197460000	KTBI QL 303015 S2E1	B.94
1197470000	KTBI QL 303022 S2E0	B.95
1197480000	KTBI QL 303022 S2E1	B.95
1197490000	KTBI QL 403015 S2E0	B.96
1197500000	KTBI QL 403015 S2E1	B.96
1197510000	KTBI QL 403022 S2E0	B.97
1197520000	KTBI QL 403022 S2E1	B.97
1197530000	KTBI QL 404022 S2E0	B.98
1197540000	KTBI QL 404022 S2E1	B.98
1197550000	KTBI QL 504022 S2E0	B.99
1197560000	KTBI QL 504022 S2E1	B.99
1197570000	KTBI QL 505022 S2E0	B.100
1197580000	KTBI QL 505022 S2E1	B.100
1197590000	KTBI QL 604022 S2E0	B.101
1197600000	KTBI QL 604022 S2E1	B.101

Order No.	Type	Page
1197610000	KTBI QL 606022 S2E0	B.102
1197620000	KTBI QL 606022 S2E1	B.102
1197630000	KTBI QL 806022 S2E0	B.103
1197640000	KTBI QL 806022 S2E1	B.103
1199860000	KTB QL 221513 S4E1	B.41
1199870000	KTB QL 221513 S4E2	B.41
1199880000	KTB QL 221513 S4E3	B.41
1199890000	KTB QL 221513 S4E4	B.41
1199910000	KTB QL 262615 S4E1	B.42
1199920000	KTB QL 262615 S4E2	B.42
1199930000	KTB QL 262615 S4E3	B.42
1199940000	KTB QL 262615 S4E4	B.42
1199960000	KTB QL 262620 S4E1	B.43
1199970000	KTB QL 262620 S4E2	B.43
1199980000	KTB QL 262620 S4E3	B.43
1199990000	KTB QL 262620 S4E4	B.43

1200000000

1200020000	KTB QL 303015 S4E1	B.44
1200030000	KTB QL 303015 S4E2	B.44
1200040000	KTB QL 303015 S4E3	B.44
1200050000	KTB QL 303015 S4E4	B.44
1200070000	KTB QL 303020 S4E1	B.45
1200080000	KTB QL 303020 S4E2	B.45
1200090000	KTB QL 303020 S4E3	B.45
1200100000	KTB QL 303020 S4E4	B.45
1200120000	KTB QL 352615 S4E1	B.46
1200130000	KTB QL 352615 S4E2	B.46
1200140000	KTB QL 352615 S4E3	B.46
1200150000	KTB QL 352615 S4E4	B.46
1200170000	KTB QL 352620 S4E1	B.47
1200180000	KTB QL 352620 S4E2	B.47
1200190000	KTB QL 352620 S4E3	B.47
1200210000	KTB QL 352620 S4E4	B.47
1200230000	KTB QL 403015 S4E1	B.48
1200240000	KTB QL 403015 S4E2	B.48
1200250000	KTB QL 403015 S4E3	B.48
1200260000	KTB QL 403015 S4E4	B.48
1200280000	KTB QL 403020 S4E1	B.49
1200290000	KTB QL 403020 S4E2	B.49
1200310000	KTB QL 403020 S4E3	B.49
1200320000	KTB QL 403020 S4E4	B.49
1200340000	KTB QL 453815 S4E1	B.50
1200350000	KTB QL 453815 S4E2	B.50
1200360000	KTB QL 453815 S4E3	B.50
1200370000	KTB QL 453815 S4E4	B.50
1200390000	KTB QL 453820 S4E1	B.51
1200410000	KTB QL 453820 S4E2	B.51
1200420000	KTB QL 453820 S4E3	B.51
1200430000	KTB QL 453820 S4E4	B.51
1200450000	KTB QL 484815 S4E1	B.52
1200460000	KTB QL 484815 S4E2	B.52
1200470000	KTB QL 484815 S4E3	B.52
1200480000	KTB QL 484815 S4E4	B.52
1200510000	KTB QL 484820 S4E1	B.53
1200520000	KTB QL 484820 S4E2	B.53
1200530000	KTB QL 484820 S4E3	B.53
1200540000	KTB QL 484820 S4E4	B.53
1200560000	KTB QL 553515 S4E1	B.54
1200570000	KTB QL 553515 S4E2	B.54
1200580000	KTB QL 553515 S4E3	B.54
1200590000	KTB QL 553515 S4E4	B.54
1200620000	KTB QL 553520 S4E1	B.55
1200630000	KTB QL 553520 S4E2	B.55
1200640000	KTB QL 553520 S4E3	B.55
1200650000	KTB QL 553520 S4E4	B.55
1200670000	KTB QL 624515 S4E1	B.56
1200680000	KTB QL 624515 S4E2	B.56
1200690000	KTB QL 624515 S4E3	B.56
1200710000	KTB QL 624515 S4E4	B.56
1200730000	KTB QL 624520 S4E1	B.57
1200740000	KTB QL 624520 S4E2	B.57
1200750000	KTB QL 624520 S4E3	B.57
1200760000	KTB QL 624520 S4E4	B.57
1200780000	KTB QL 765015 S4E1	B.58
1200790000	KTB QL 765015 S4E2	B.58
1200810000	KTB QL 765015 S4E3	B.58
1200820000	KTB QL 765015 S4E4	B.58
1200840000	KTB QL 765020 S4E1	B.59
1200850000	KTB QL 765020 S4E2	B.59
1200860000	KTB QL 765020 S4E3	B.59
1200870000	KTB QL 765020 S4E4	B.59
1200890000	KTB QL 916115 S4E1	B.60
1200910000	KTB QL 916115 S4E2	B.60
1200920000	KTB QL 916115 S4E3	B.60
1200930000	KTB QL 916115 S4E4	B.60
1200950000	KTB QL 916120 S4E1	B.61
1200960000	KTB QL 916120 S4E2	B.61
1200970000	KTB QL 916120 S4E3	B.61
1200980000	KTB QL 916120 S4E4	B.61
1201010000	KTB QL 987420 S4E1	B.62
1201020000	KTB QL 987420 S4E2	B.62
1201030000	KTB QL 987420 S4E3	B.62
1201040000	KTB QL 987420 S4E4	B.62
1209890000	KSPM M16 PL	C.66
1209910000	KSPM M20 PL	C.66
1209920000	KSPM M25 PL	C.66
1209930000	KSPM M32 PL	C.66

Order No.	Type	Page
1209940000	KSPM M40 PL	C.66
1209950000	KSPM M50 PL	C.66

1210000000

1210890000	VP M16 EXE MS	C.63
1210900000	VP M20 EXE MS	C.63
1210910000	VP M25 EXE MS	C.63
1210920000	VP M32 EXE MS	C.63
1210930000	VP M40 EXE MS	C.63
1210940000	VP M50 EXE MS	C.63
1210950000	VP M63 EXE MS	C.63

1250000000

1252190000	TPSD FIXING SET KTB	B.15
1252730000	DOHA KTB A4 S2 R	B.26
1252750000	DOHA KTB A5 S2 R	B.24
1252780000	DOHA KTB A6 S2 R	B.16
1253230000	DESC M6X14 KTB SET	B.15
1256270000	KTB GP 221513 AB S4 6MM	B.15
1256280000	KTB GP 221513 CD S4 6MM	B.15
1256290000	KTB GP 262615 AB S4 6MM	B.16
1256310000	KTB GP 262615 CD S4 6MM	B.16
1256320000	KTB GP 262620 AB S4 6MM	B.17
1256330000	KTB GP 262620 CD S4 6MM	B.17
1256340000	KTB GP 303015 AB S4 6MM	B.18
1256350000	KTB GP 303015 CD S4 6MM	B.18
1256360000	KTB GP 303020 AB S4 6MM	B.19
1256370000	KTB GP 303020 CD S4 6MM	B.19
1256380000	KTB GP 352615 AB S4 6MM	B.20
1256390000	KTB GP 352615 CD S4 6MM	B.20
1256410000	KTB GP 352620 AB S4 6MM	B.21
1256420000	KTB GP 352620 CD S4 6MM	B.21
1256430000	KTB GP 403015 AB S4 6MM	B.22
1256440000	KTB GP 403015 CD S4 6MM	B.22
1256450000	KTB GP 403020 AB S4 6MM	B.23
1256470000	KTB GP 403020 CD S4 6MM	B.23
1256480000	KTB GP 453815 AB S4 6MM	B.24
1256490000	KTB GP 453815 CD S4 6MM	B.24
1256510000	KTB GP 453820 AB S4 6MM	B.25
1256520000	KTB GP 453820 CD S4 6MM	B.25
1256530000	KTB GP 484815 AB S4 6MM	B.26
1256540000	KTB GP 484815 CD S4 6MM	B.26
1256550000	KTB GP 484820 AB S4 6MM	B.27
1256560000	KTB GP 484820 CD S4 6MM	B.27
1256570000	KTB GP 553515 AB S4 6MM	B.28
1256580000	KTB GP 553515 CD S4 6MM	B.28
1256590000	KTB GP 553520 AB S4 6MM	B.29
1256610000	KTB GP 553520 CD S4 6MM	B.29
1256620000	KTB GP 624515 AB S4 6MM	B.30
1256630000	KTB GP 624515 CD S4 6MM	B.30
1256640000	KTB GP 624520 AB S4 6MM	B.31
1256650000	KTB GP 624520 CD S4 6MM	B.31
1256660000	KTB GP 765015 AB S4 6MM	B.32
1256670000	KTB GP 765015 CD S4 6MM	B.32
1256680000	KTB GP 765020 AB S4 6MM	B.33
1256690000	KTB GP 765020 CD S4 6MM	B.33
1256710000	KTB GP 916115 AB S4 6MM	B.34
1256720000	KTB GP 916115 CD S4 6MM	B.34
1256730000	KTB GP 916120 AB S4 6MM	B.35
1256740000	KTB GP 916120 CD S4 6MM	B.35
1256750000	KTB GP 987420 AB S4 6MM	B.36
1256760000	KTB GP 987420 CD S4 6MM	B.36
1257640000	TPSDHA KTB 100X25 S2 2R	B.15
1257650000	KTB MOPL 2215 S2N H	B.15
1257660000	KTB MOPL 2626 S2N H	B.16
1257670000	KTB MOPL 3030 S2N H	B.18
1257680000	KTB MOPL 3526 S2N H	B.20
1257690000	KTB MOPL 4030 S2N H	B.22
1257700000	KTB MOPL 4538 S2N H	B.24
1257710000	KTB MOPL 4848 S2N H	B.26
1257720000	KTB MOPL 5535 S2N H	B.28
1257740000	KTB MOPL 6245 S2N H	B.30
1257750000	KTB MOPL 7650 S2N H	B.32
1257760000	KTB MOPL 9161 S2N H	B.34
1257770000	KTB MOPL 9874 S2N H	B.36

1270000000

1274150000	GFSC M5x10 TX20 SET	B.15
1277200000	Klippon POK 1	B.166
1277300000	Klippon POK 2	B.167
1277400000	Klippon POK 3	B.168
1277500000	Klippon POK 4	B.171
1277600000	Klippon POK 5	B.172
1277700000	Klippon POK 6	B.174
1277800000	Klippon POK 7	B.175
1279320000	TPSDHA KTB 70X70M3 S2 R	B.15

1280000000

1281360000	KTB RNHD 221513 R	B.15
1281360000	KTB RNHD 221513 R	B.41
1281370000	KTB RNHD 262615 R	B.16
1281370000	KTB RNHD 262615 R	B.42
1281380000	KTB RNHD 262620 R	B.17
1281380000	KTB RNHD 262620 R	B.43
1281390000	KTB RNHD 303015 R	B.18

Order No.	Type	Page
1281390000	KTB RNHD 303015 R	B.44
1281400000	KTB RNHD 303020 R	B.19
1281400000	KTB RNHD 303020 R	B.45
1281410000	KTB RNHD 352615 R	B.20
1281410000	KTB RNHD 352615 R	B.46
1281420000	KTB RNHD 352620 R	B.21
1281420000	KTB RNHD 352620 R	B.47
1281430000	KTB RNHD 403015 R	B.22
1281430000	KTB RNHD 403015 R	B.48
1281440000	KTB RNHD 403020 R	B.23
1281440000	KTB RNHD 403020 R	B.49
1281450000	KTB RNHD 453815 R	B.24
1281450000	KTB RNHD 453815 R	B.50
1281460000	KTB RNHD 453820 R	B.25
1281460000	KTB RNHD 453820 R	B.51
1281470000	KTB RNHD 484815 R	B.26
1281470000	KTB RNHD 484815 R	B.52
1281480000	KTB RNHD 484820 R	B.27
1281480000	KTB RNHD 484820 R	B.53
1281490000	KTB RNHD 553515 R	B.28
1281490000	KTB RNHD 553515 R	B.54
1281500000	KTB RNHD 553520 R	B.29
1281500000	KTB RNHD 553520 R	B.55
1281510000	KTB RNHD 624515 R	B.30
1281510000	KTB RNHD 624515 R	B.56
1281520000	KTB RNHD 624520 R	B.31
1281520000	KTB RNHD 624520 R	B.57
1281530000	KTB RNHD 765015 R	B.32
1281530000	KTB RNHD 765015 R	B.58
1281540000	KTB RNHD 765020 R	B.33
1281540000	KTB RNHD 765020 R	B.59
1281550000	KTB RNHD 916115 R	B.34
1281550000	KTB RNHD 916115 R	B.60
1281570000	KTB RNHD 916120 R	B.35
1281570000	KTB RNHD 916120 R	B.61
1281580000	KTB RNHD 987420 R	B.36
1281580000	KTB RNHD 987420 R	B.62
1283450000	TPSDHA KTB 130X50 S2 R	B.15
1285200000	SD FIXING SET	B.15
1289180000	KTBI MF S2 SET	B.93

1290000000

1292530000	KLIPPON BDX M20 S	C.73
1292540000	KLIPPON BDX M20 B	C.73

1300000000

1309690000	KTBI MOPL 3020 MSZN	B.93
1309690000	KTBI MOPL 3020 MSZN	B.107
1309700000	KTBI MOPL 3020 S2N	B.93
1309700000	KTBI MOPL 3020 S2N	B.107

1310000000

1310320000	KTBI MOPL 3030 S2N	B.94
1310320000	KTBI MOPL 3030 S2N	B.95
1310320000	KTBI MOPL 3030 S2N	B.108
1310320000	KTBI MOPL 3030 S2N	B.109
1310330000	KTBI MOPL 4030 S2N	B.96
1310330000	KTBI MOPL 4030 S2N	B.97
1310330000	KTBI MOPL 4030 S2N	B.110
1310330000	KTBI MOPL 4030 S2N	B.111
1310340000	KTBI MOPL 4040 S2N	B.98
1310340000	KTBI MOPL 4040 S2N	B.112
1310350000	KTBI MOPL 5040 S2N	B.99
1310350000	KTBI MOPL 5040 S2N	B.113
1310360000	KTBI MOPL 5050 S2N	B.100
1310360000	KTBI MOPL 5050 S2N	B.114
1310370000	KTBI MOPL 6040 S2N	B.101
1310370000	KTBI MOPL 6040 S2N	B.115
1310380000	KTBI MOPL 6060 S2N	B.102
1310380000	KTBI MOPL 6060 S2N	B.116
1310390000	KTBI MOPL 8060 S2N	B.103
1310390000	KTBI MOPL 8060 S2N	B.117
1310410000	KTBI MOPL 3030 MSZN	B.94
1310420000	KTBI MOPL 4030 MSZN	B.96
1310430000	KTBI MOPL 4040 MSZN	B.98
1310430000	KTBI MOPL 4040 MSZN	B.112
1310440000	KTBI MOPL 5040 MSZN	B.99
1310440000	KTBI MOPL 5040 MSZN	B.113
1310450000	KTBI MOPL 5050 MSZN	B.100
1310450000	KTBI MOPL 5050 MSZN	B.114
1310460000	KTBI MOPL 6040 MSZN	B.101
1310460000	KTBI MOPL 6040 MSZN	B.115
1310470000	KTBI MOPL 6060 MSZN	B.102
1310470000	KTBI MOPL 6060 MSZN	B.116
1310480000	KTBI MOPL 8060 MSZN	B.103
1310480000	KTBI MOPL 8060 MSZN	B.117
1318130000	WK IK SL/PH1	E.12
1318140000	WK IK SL/PH2	E.12
1318330000	SDI SL/PH 1	E.15
1318340000	SDI SL/PH 2	E.15
1318390000	SDQ T15	E.22
1318400000	SDQ T20	E.22
1318410000	SDQ T40	E.22

Order No.	Type	Page

1320000000

1323880000	SD TO 0,6X3,0	E.18

1340000000

1344630000	KLIPPON BDX M20X15 S	C.73

1390000000

1390910000	KLIPPON COPL 080806	B.166
1390920000	KLIPPON COPL 081106	B.167
1390930000	KLIPPON COPL 081606	B.168
1390940000	KLIPPON COPL 081906	B.169
1390950000	KLIPPON COPL 082306	B.170
1390970000	KLIPPON COPL 121209	B.171
1390980000	KLIPPON COPL 122209	B.172
1390990000	KLIPPON COPL 161609	B.173
1391000000	KLIPPON COPL 162609	B.174
1391010000	KLIPPON COPL 163609	B.175
1391020000	KLIPPON COPL 165609	B.176
1391030000	KLIPPON COPL 252512/16	B.177
1391030000	KLIPPON COPL 252512/16	B.181
1391040000	KLIPPON COPL 254012/16	B.178
1391040000	KLIPPON COPL 254012/16	B.182
1391050000	KLIPPON COPL 256012	B.179
1391070000	KLIPPON COPL 404012	B.180

1560000000

1565240000	KLIPPON K01	B.131
1565240000	KLIPPON K01	B.150
1565250000	KLIPPON K02	B.132
1565260000	KLIPPON K32	B.139
1565270000	KLIPPON K41	B.141
1565270000	KLIPPON K41	B.150
1565280000	KLIPPON K51	B.143
1565290000	KLIPPON K52	B.144
1565290000	KLIPPON K52	B.150
1565400000	Klippon POK31	B.169
1565410000	Klippon POK 51	B.173
1565410000	Klippon POK 51	B.184
1565420000	Klippon POK 8	B.177
1565430000	Klippon POK 9	B.178
1565440000	Klippon POK 10	B.180
1568970000	VG 7-K68	C.7
1568980000	VG 9-K68	C.7
1568990000	VG 11-K68	C.7
1569000000	VG 13,5-K68	C.7
1569010000	VG 16-K68	C.7
1569020000	VG 21-K68	C.7
1569030000	VG 29-K68	C.7
1569040000	VG 36-K68	C.7
1569050000	VG 42-K68	C.7
1569060000	VG 7-MS68	C.11
1569070000	VG 9-MS68	C.11
1569080000	VG 11-MS68	C.11
1569090000	VG 13,5-MS68	C.11
1569100000	VG 16-MS68	C.11
1569110000	VG 21-MS68	C.11
1569120000	VG 29-MS68	C.11
1569130000	VG 36-MS68	C.11
1569140000	VG 42-MS68	C.11

1580000000

1580360000	HG K+POK	B.134

1650000000

1656390000	KV 11-M	C.14
1656400000	KV 13-M	C.14
1656410000	KV 16-M	C.14
1656420000	KV 21-M	C.14
1656430000	KV 29-M	C.14

1690000000

1694070000	SKMU PG7-MS	C.48
1694080000	SKMU PG9-MS	C.48
1694090000	SKMU PG11-MS	C.48
1694100000	SKMU PG13,5-MS	C.48
1694110000	SKMU PG16-MS	C.48
1697440000	SKMU PG7-K GR	C.46
1697450000	SKMU PG9-K GR	C.46
1697460000	SKMU PG11-K GR	C.46
1697470000	SKMU PG 13,5-K GR	C.46
1697480000	SKMU PG16-K GR	C.46
1698220000	SKMU PG21-K GR	C.46
1698230000	SKMU PG29-K GR	C.46
1698240000	SKMU PG36-K GR	C.46
1698250000	SKMU PG42-K GR	C.46

1700000000

1706860000	VG EMV PG 9/11	C.15
1706870000	VG EMV PG 11	C.15
1706880000	VG EMV PG 13,5	C.15
1706890000	VG EMV PG 16 K14	C.15
1706900000	VG EMV PG 21 K18	C.15
1706910000	VG EMV PG 29 K26	C.15
1706920000	VG EMV M18X1,5	C.15
1706930000	VG EMV M24X1,5	C.15
1706940000	VG EMV M20X1,5	C.15
1706950000	VG EMV M25X1,5	C.15

1710000000

1713870000	VG EMV PG 7/9	C.15
1713880000	VG EMV PG 16 K18	C.15
1713890000	VG EMV PG K28	C.15
1713900000	VG EMV PG 29 K29	C.15
1718770000	VG 48-K68	C.7
1718780000	VG 48-MS54	C.9
1718790000	VG 48-MS68	C.11
1718800000	VG 7-MS54-ZE	C.12
1718810000	VG 9-MS54-ZE	C.12
1718820000	VG 11-MS54-ZE	C.12
1718830000	VG 13,5-MS54-ZE	C.12
1718840000	VG 16-MS54-ZE	C.12
1718850000	VG 21-MS54-ZE	C.12
1718860000	VG 29-MS54-ZE	C.12
1718870000	VG 36-MS54-ZE	C.12
1718880000	VG 42-MS54-ZE	C.12
1718890000	VG 48-MS54-ZE	C.12
1718900000	SKMU EMV PG7	C.50
1718910000	SKMU EMV PG9	C.50
1718920000	SKMU EMV PG11	C.50
1718930000	SKMU EMV PG13,5	C.50
1718940000	SKMU EMV PG16	C.50
1718950000	SKMU EMV PG21	C.50
1718960000	SKMU EMV PG29	C.50
1719090000	SKMU PG48-K GR	C.46
1719100000	SKMU PG7-K SW	C.47
1719110000	SKMU PG9-K SW	C.47
1719120000	SKMU PG11-K SW	C.47
1719130000	SKMU PG13,5-K SW	C.47
1719140000	SKMU PG16-K SW	C.47
1719150000	SKMU PG21-K SW	C.47
1719160000	SKMU PG29-K SW	C.47
1719170000	SKMU PG36-K SW	C.47
1719180000	SKMU PG42-K SW	C.47
1719190000	SKMU PG48-K SW	C.47
1719200000	SKMU PG21-MS	C.48
1719210000	SKMU PG29-MS	C.48
1719220000	SKMU PG36-MS	C.48
1719230000	SKMU PG42-MS	C.48
1719240000	SKMU PG48-MS	C.48
1719250000	VP 7-K54	C.60
1719260000	VP 48-K54	C.60
1719270000	VP 48-MS65	C.61
1719440000	GWDR PG7-PO	C.51
1719450000	GWDR PG9-PO	C.51
1719460000	GWDR PG11-PO	C.51
1719470000	GWDR PG13,5-PO	C.51
1719480000	GWDR PG16-PO	C.51
1719490000	GWDR PG21-PO	C.51
1719500000	GWDR PG29-PO	C.51
1719510000	GWDR PG36-PO	C.51
1719520000	GWDR PG42-PO	C.51
1719530000	GWDR PG48-PO	C.51
1719540000	GWDR PG7-NP	C.52
1719550000	GWDR PG9-NP	C.52
1719560000	GWDR PG11-NP	C.52
1719570000	GWDR PG13,5-NP	C.52
1719580000	GWDR PG16-NP	C.52
1719590000	GWDR PG21-NP	C.52
1719600000	GWDR PG29-NP	C.52
1719610000	GWDR PG36-NP	C.52
1719620000	GWDR PG42-NP	C.52
1719630000	GWDR PG48-NP	C.52
1719740000	EWS M 25X1,5	C.72

1720000000

1720480000	VG 9-K68 SKS	C.8
1720490000	VG 11-K68 SKS	C.8
1720500000	VG 13.5-K68 SKS	C.8
1720510000	VG 16-K68 SKS	C.8
1720520000	VG 21-K68 SKS	C.8

1730000000

1736230000	GWDR M16-NP	C.52
1736240000	GWDR M20-NP	C.52
1736250000	GWDR M25-NP	C.52
1736260000	GWDR M32-NP	C.52
1736270000	GWDR M40-NP	C.52
1736280000	GWDR M50-NP	C.52
1736290000	GWDR M63-NP	C.52
1736300000	SZS M16	C.59
1736310000	SZS M20	C.59
1736320000	SZS M25	C.59
1736330000	SZS M32	C.59
1736340000	SZS M40	C.59
1736350000	SZS M50	C.59
1736360000	SZS M63	C.59
1736480000	EA-RING MS/M 16	C.55
1736490000	EA-RING MS/M 20	C.55
1736500000	EA-RING MS/M 25	C.55
1736510000	EA-RING MS/M 32	C.55
1736520000	EA-RING MS/M 40	C.55
1736530000	EA-RING MS/M 50	C.55
1736540000	EA-RING MS/M 63	C.55
1736550000	EA-RING MS/M 75	C.55
1736570000	KSP L24	C.57
1736580000	KSP L30	C.57
1736590000	KSP L38	C.57
1736600000	KSP L46	C.57
1736610000	KSP L55	C.57
1736620000	KSP L65	C.57
1736630000	KSP L80	C.57
1736640000	KSP L90	C.57
1736670000	KSP EL30	C.57
1736680000	KSP EL38	C.57
1736920000	SKMU M16 K SW	C.47
1736930000	SKMU M20 K SW	C.47
1736940000	SKMU M25 K SW	C.47
1736950000	SKMU M32 K SW	C.47
1736960000	SKMU M40 K SW	C.47
1736970000	SKMU M50 K SW	C.47
1736980000	SKMU M63 K SW	C.47
1736990000	SKMU M16 MS	C.48
1737000000	SKMU M20 MS	C.48
1737010000	SKMU M25 MS	C.48
1737020000	SKMU M32 MS	C.48
1737030000	SKMU M40 MS	C.48
1737040000	SKMU M50 MS	C.48
1737050000	SKMU M63 MS	C.48
1737060000	SKMU M75 MS	C.48
1737070000	VP M16-EXE SW	C.62
1737080000	VP M20-EXE SW	C.62
1737090000	VP M25-EXE SW	C.62
1737100000	VP M32-EXE SW	C.62
1737110000	VP M40-EXE SW	C.62
1737120000	VP M50-EXE SW	C.62
1737130000	VP M63-EXE SW	C.62
1737140000	VP M16-EXE MS	B.152
1737150000	VP M20-EXE MS	B.153
1737420000	ADAP EX 3NPT-M16	C.67
1737430000	ADAP EX 2 1/2NPT-M16	C.67
1737440000	ADAP EX 2NPT-M16	C.67
1737490000	ADAP EX 1/2NPT-M16	C.67
1737500000	ADAP EX M75-M16	C.68
1737510000	ADAP EX M63-M16	C.68
1737520000	ADAP EX M50-M16	C.68
1737530000	ADAP EX M40-M16	C.68
1737540000	ADAP EX M32-M16	C.68
1737550000	ADAP EX M25-M16	C.68
1737560000	ADAP EX M20-M16	B.154
1737580000	ADAP EX 3NPT-M20	C.67
1737590000	ADAP EX 2 1/2NPT-M20	C.67
1737600000	ADAP EX 2NPT-M20	C.67
1737630000	ADAP EX 1NPT-M20	C.67
1737640000	ADAP EX 3/4NPT-M20	C.67
1737650000	ADAP EX 1/2NPT-M20	C.67
1737660000	ADAP EX M75-M20	C.68
1737670000	ADAP EX M63-M20	C.68
1737680000	ADAP EX M50-M20	C.68
1737690000	ADAP EX M40-M20	C.68
1737700000	ADAP EX M32-M20	C.68
1737710000	ADAP EX M25-M20	C.68
1737720000	ADAP EX M20-M20	C.68
1737730000	ADAP EX M16-M20	C.68
1737740000	ADAP EX 3NPT-M25	C.67
1737750000	ADAP EX 2 1/2NPT-M25	C.67
1737760000	ADAP EX 2NPT-M25	C.67
1737790000	ADAP EX 1NPT-M25	C.67
1737800000	ADAP EX 3/4NPT-M25	C.67
1737810000	ADAP EX 1/2NPT-M25	C.67
1737820000	ADAP EX M75-M25	C.68
1737830000	ADAP EX M63-M25	C.68
1737840000	ADAP EX M50-M25	C.68
1737850000	ADAP EX M40-M25	C.68
1737860000	ADAP EX M32-M25	C.68
1737880000	ADAP EX M20-M25	C.68
1737890000	ADAP EX 3NPT-M32	C.67
1737900000	ADAP EX 2 1/2NPT-M32	C.67
1737910000	ADAP EX 2NPT-M32	C.67
1737950000	ADAP EX 3/4NPT-M32	C.67
1737960000	ADAP EX M75-M32	C.68
1737970000	ADAP EX M63-M32	C.68
1737980000	ADAP EX M50-M32	C.68
1737990000	ADAP EX M40-M32	C.68
1738010000	ADAP EX M25-M32	C.68
1738020000	ADAP EX 3NPT-M40	C.67
1738030000	ADAP EX 2 1/2NPT-M40	C.67
1738040000	ADAP EX 2NPT-M40	C.67
1738070000	ADAP EX 1NPT-M40	C.67
1738080000	ADAP EX M75-M40	C.68
1738090000	ADAP EX M63-M40	C.68
1738100000	ADAP EX M50-M40	C.68
1738110000	ADAP EX M40-M40	C.68
1738120000	ADAP EX M32-M40	C.68
1738130000	ADAP EX 3NPT-M50	C.67
1738140000	ADAP EX 2 1/2NPT-M50	C.67
1738150000	ADAP EX 2NPT-M50	C.67
1738180000	ADAP EX M75-M50	C.68
1738190000	ADAP EX M63-M50	C.68
1738210000	ADAP EX M40-M50	C.68
1738220000	ADAP EX 3NPT-M63	C.67
1738230000	ADAP EX 2 1/2NPT-M63	C.67
1738240000	ADAP EX 2NPT-M63	C.67
1738260000	ADAP EX M75-M63	C.68
1738280000	ADAP EX M50-M63	C.68
1738290000	ADAP EX 3NPT-M75	C.67
1738300000	ADAP EX 2 1/2NPT-M75	C.67
1738310000	ADAP EX 2NPT-M75	C.67
1738330000	ADAP EX M63-M75	C.68
1738340000	ADAP EX 3NPT-1/2NPT	C.67
1738350000	ADAP EX 2 1/2NPT-1/2	C.67
1738360000	ADAP EX 2NPT-1/2NPT	C.67
1738370000	ADAP EX 1 1/2NPT-1/2NPT	C.67
1738380000	ADAP EX 1 1/4NPT-1/2NPT	C.67
1738390000	ADAP EX 1NPT-1/2NPT	C.67
1738400000	ADAP EX 3/4NPT-1/2NPT	C.67
1738410000	ADAPAP EX 1/2NPT-1/2NPT	C.67
1738420000	ADAP EX M75-1/2NPT	C.68
1738430000	ADAP EX M63-1/2NPT	C.68
1738440000	ADAP EX M50-1/2NPT	C.68
1738450000	ADAP EX M40-1/2NPT	C.68
1738460000	ADAP EX M32-1/2NPT	C.68
1738480000	ADAP EX M20-1/2NPT	C.68
1738500000	ADAP EX 3NPT-3/4NPT	C.67
1738510000	ADAP EX 2 1/2NPT-3/4NPT	C.67
1738520000	ADAP EX 2NPT-3/4NPT	C.67
1738530000	ADAP EX 1 1/2NPT-3/4NPT	C.67
1738540000	ADAP EX 1 1/4NPT-3/4NPT	C.67
1738550000	ADAP EX 1NPT-3/4NPT	C.67
1738560000	ADAP EX 3/4NPT-3/4NPT	C.67
1738570000	ADAP EX 1/2NPT-3/4NPT	C.67
1738580000	ADAP EX M75-3/4NPT	C.68
1738590000	ADAP EX M63-3/4NPT	C.68
1738600000	ADAP EX M50-3/4NPT	C.68
1738610000	ADAP EX M40-3/4NPT	C.68
1738630000	ADAP EX M25-3/4NPT	C.68
1738640000	ADAP EX M20-3/4NPT	C.68
1738650000	ADAP EX 3NPT-1NPT	C.67
1738660000	ADAP EX 2 1/2NPT-1NPT	C.67
1738670000	ADAP EX 2NPT-1NPT	C.67
1738680000	ADAP EX 1 1/2NPT-1NPT	C.67
1738690000	ADAP EX 1 1/4NPT-1NPT	C.67
1738700000	ADAP EX 1NPT-1NPT	C.67
1738710000	ADAP EX M75-1NPT	C.68
1738720000	ADAP EX M63-1NPT	C.68
1738730000	ADAP EX M50-1NPT	C.68
1738740000	ADAP EX M40-1NPT	C.68
1738750000	ADAP EX M32-1NPT	C.68
1738760000	ADAP EX M25-1NPT	C.68
1738770000	ADAP EX 3NPT-1 1/4NPT	C.67
1738780000	ADAP EX 2 1/2NPT-1 1/4	C.67
1738790000	ADAP EX 2NPT-1 1/4NPT	C.67
1738800000	ADAP EX 1 1/2NPT-1 1/4	C.67
1738810000	ADAP EX 1 1/4-1 1/4NPT	C.67
1738820000	ADAP EX 1NPT-1 1/4NPT	C.67
1738830000	ADAP EX M75-1 1/4NPT	C.68
1738840000	ADAP EX M63-1 1/4NPT	C.68
1738850000	ADAP EX M50-1 1/4NPT	C.68
1738870000	ADAP EX M32-1 1/4NPT	C.68
1738880000	ADAP EX 3NPT-1 1/2NPT	C.67
1738890000	ADAP EX 2 1/2NPT-1 1/2	C.67
1738900000	ADAP EX 2NPT-1 1/2NPT	C.67
1738910000	ADAP EX 1 1/2-1 1/2NPT	C.67
1738920000	ADAP EX 1 1/4NPT-1 1/2	C.67
1738930000	ADAP EX M75-1 1/2NPT	C.68
1738940000	ADAP EX M63-1 1/2NPT	C.68
1738970000	ADAP EX 3NPT-2NPT	C.67
1738980000	ADAP EX 2 1/2NPT-2NPT	C.67
1738990000	ADAP EX 2NPT-2NPT	C.67
1739010000	ADAP EX M75-2NPT	C.68
1739040000	ADAP EX 3NPT-2 1/2NPT	C.67
1739050000	ADAP EX 2 1/2-2 1/2NPT	C.67
1739060000	ADAP EX 2NPT-2 1/2NPT	C.67
1739070000	ADAP EX M75-2 1/2NPT	C.68
1739080000	ADAP EX M63-2 1/2NPT	C.68
1739090000	ADAP EX 3NPT-3NPT	C.67
1739100000	ADAP EX 2 1/2NPT-3NPT	C.67
1739110000	ADAP EX M75-3NPT	C.68

1770000000

1770410000	VG EMV PG36 K32-27	C.15
1772200000	VG M12 - MS 68	C.11
1772210000	VG M16 - MS 68	C.11
1772220000	VG M20 - MS 68	C.11
1772230000	VG M25 - MS 68	C.11
1772240000	VG M32 - MS 68	C.11
1772250000	VG M40 - MS 68	C.11
1772260000	VG M50 - MS 68	C.11
1772270000	VG M63 - MS 68	C.11
1772280000	VG M12-1/K68	C.7
1772290000	VG M16 - K 68	C.7
1772300000	VG M20-1/K68	C.7
1772310000	VG M25 - K 68	C.7
1772320000	VG M32 - K 68	C.7
1772330000	VG M40 - K 68	C.7

Order No.	Type	Page
1772340000	VG M50 - K 68	C.7
1772350000	VG M63-1/K68	C.7
1772360000	SKMU M12 - MS	C.48
1772440000	SKMU M12 - K GR	C.46
1772450000	SKMU M16 - K GR	C.46
1772460000	SKMU M20 - K GR	C.46
1772470000	SKMU M25 - K GR	C.46
1772480000	SKMU M32 - K GR	C.46
1772490000	SKMU M40 - K GR	C.46
1772500000	SKMU M50 - K GR	C.46
1772510000	SKMU M63 - K GR	C.46
1776700000	VG M12-K68 SKS	C.8
1776710000	VG M16-K68 SKS	C.8
1776720000	VG M20-K68 SKS 10-14	C.8
1776730000	VG M25-K68 SKS	C.8
1776900000	VP M25 K54	C.60
1776910000	VP M20 K54	C.60
1776920000	VP M16 K54	C.60
1776930000	VP M12 K54	C.60
1776940000	VP M32 K54	C.60
1776950000	VP M40 K54	C.60
1776960000	VP M50 K54	C.60
1776970000	VP M63 K54	C.60
1777610000	SKMU EMV M12	C.50
1777620000	SKMU EMV M16	C.50
1777630000	SKMU EMV M20	C.50
1777640000	SKMU EMV M25	C.50
1777650000	SKMU EMV M32	C.50
1777660000	SKMU EMV M40	C.50
1777670000	SKMU EMV M50	C.50
1777680000	SKMU EMV M63	C.50
1777690000	SKMU EMV PG 48	C.50
1777700000	SKMU EMV PG 42	C.50
1777710000	SKMU EMV PG 36	C.50
1777720000	VP M12-MS65	C.61
1777730000	VP M16-MS65	C.61
1777740000	VP M20-MS65	C.61
1777750000	VP M25-MS65	C.61
1777760000	VP M32-MS65	C.61
1777770000	VP M40-MS65	C.61
1777780000	VP M50-MS65	C.61
1777790000	VP M63-MS65	C.61
1777920000	GWDR M12-P0	C.51
1777930000	GWDR M16-P0	C.51
1777940000	GWDR M20-P0	C.51
1777950000	GWDR M25-P0	C.51
1777960000	GWDR M32-P0	C.51
1777970000	GWDR M40-P0	C.51
1777980000	GWDR M50-P0	C.51
1777990000	GWDR M63-P0	C.51
1778300000	VGM63-MS54	C.9
1778310000	VGM50-MS54 KB 39,0-41,0	C.9
1778320000	VGM50-MS54 KB 31,0-33,0	C.9
1778330000	VGM40-MS54	C.9
1778340000	VGM32-MS54	C.9
1778350000	VGM25-MS54 KB 15,0-17,0	C.9
1778360000	VGM25-MS54 KB 12,0-14,0	C.9
1778370000	VGM20-MS54 KB 10,0-12,0	C.9
1778380000	VGM20-MS54 KB 8,0-10,0	C.9
1778390000	VGM16-MS54	C.9
1778400000	VGM12-MS54 KB 6,0-8,0	C.9
1778410000	VGM12-MS54 KB 5,0-7,0	C.9
1778420000	VGM12-MS54 ZE 5,0-7,0	C.12
1778440000	VGM16-MS54 ZE	C.12
1778450000	VGM20-MS54 ZE	C.12
1778460000	VGM20-MS54 ZE 6,0-13,5	C.12
1778480000	VGM25-MS54 ZE	C.12
1778490000	VGM32-MS54 ZE	C.12
1778500000	VGM40-MS54 ZE	C.12
1778520000	VGM50-MS54 ZE	C.12
1778530000	VGM63-MS54 ZE	C.12
1778860000	VG M20-K68 SKS 6-12	C.8

1800000000

1806540000	SKMU M12-K SW	C.47
1806630000	IS 2 KG	E.22
1806650000	IS 3 KG	E.22
1806660000	IS 4 KG	E.22

1820000000

1825750000	CABTITE KEL 16/4 EMV	D.8
1825760000	CABTITE KEL 24/5 EMV	D.8
1825860000	CABTITE KEL 16/2	D.5
1825900000	CABTITE KEL 16/4	D.5
1825910000	CABTITE KEL 16/8	D.5
1825930000	CABTITE KEL 24/4	D.5
1825940000	CABTITE KEL 24/5	D.5
1825950000	CABTITE KT 16	D.3
1826300000	CABTITE KT 17	D.3
1826310000	CABTITE KT 18	D.3
1826320000	CABTITE KT 19	D.3
1826330000	CABTITE KT 20	D.3
1826340000	CABTITE KT 21	D.3
1826350000	CABTITE KT 22	D.3
1826360000	CABTITE KT 23	D.3
1826370000	CABTITE KT 24	D.3
1826380000	CABTITE KT 25	D.3

Order No.	Type	Page
1826390000	CABTITE KT 26	D.3
1826400000	CABTITE KT 27	D.3
1826410000	CABTITE KT 28	D.3
1826420000	CABTITE KT 29	D.3
1826430000	CABTITE KT 30	D.3
1826440000	CABTITE KT 32	D.3
1826450000	CABTITE KT 34	D.3
1826460000	CABTITE KT 3	D.3
1826470000	CABTITE KT 4	D.3
1826480000	CABTITE KT 5	D.3
1826490000	CABTITE KT 6	D.3
1826500000	CABTITE KT 7	D.3
1826510000	CABTITE KT 8	D.3
1826520000	CABTITE KT 9	D.3
1826530000	CABTITE KT 10	D.3
1826540000	CABTITE KT 11	D.3
1826550000	CABTITE KT 12	D.3
1826560000	CABTITE KT 13	D.3
1826570000	CABTITE KT 14	D.3
1826580000	CABTITE KT 15	D.3
1826590000	CABTITE KTs 16	D.3
1826600000	CABTITE KTs 17	D.3
1826610000	CABTITE KT ASI	D.3
1826620000	CABTITE KT 2/4	D.3
1826630000	CABTITE KT 2/5	D.3
1826640000	CABTITE KT 2/6	D.3
1826650000	CABTITE KT 4/5	D.3
1826660000	CABTITE KV T 25	D.10
1826670000	CABTITE KV T 32	D.10
1827760000	CABTITE KEL 24/10	D.5
1827770000	CABTITE KEL SNAP 16	D.5
1827780000	CABTITE KEL SNAP 24	D.5
1827790000	CABTITE KT 3 b	D.3
1827800000	CABTITE KT 4 b	D.3
1827810000	CABTITE KT 5 b	D.3
1827830000	CABTITE KT 6 b	D.3
1827840000	CABTITE KT 7 b	D.3
1827850000	CABTITE KT 8 b	D.3
1827860000	CABTITE KT 9 b	D.3
1827870000	CABTITE KT 10 b	D.3
1827880000	CABTITE KT 11 b	D.3
1827890000	CABTITE KT 12 b	D.3
1827900000	CABTITE KT 13 b	D.3
1827910000	CABTITE KT 14 b	D.3
1827920000	CABTITE KT 15 b	D.3
1827930000	CABTITE KTs 16 b	D.3
1827940000	CABTITE KTs 17 b	D.3
1827950000	CABTITE KT 16 b	D.3
1827960000	CABTITE KT 17 b	D.3
1827970000	CABTITE KT 18 b	D.3
1827980000	CABTITE KT 19 b	D.3
1827990000	CABTITE KT 20 b	D.3
1828000000	CABTITE KT 21 b	D.3
1828010000	CABTITE KT 22 b	D.3
1828020000	CABTITE KT 23 b	D.3
1828030000	CABTITE KT 24 b	D.3
1828040000	CABTITE KT 25 b	D.3
1828050000	CABTITE KT 26 b	D.3
1828060000	CABTITE KT 27 b	D.3
1828070000	CABTITE KT 28 b	D.3
1828080000	CABTITE KT 29 b	D.3
1828090000	CABTITE KT 30 b	D.3
1828100000	CABTITE KT 32 b	D.3
1828110000	CABTITE KT 34 b	D.3
1828120000	CABTITE KT ASI b	D.3
1828130000	CABTITE KT 2/4 b	D.3
1828140000	CABTITE KT 2/5 b	D.3
1828150000	CABTITE KT 2/6 b	D.3
1828160000	CABTITE KT 4/5 b	D.3
1828170000	CABTITE KT BTK	D.3
1828180000	CABTITE KT BTG	D.3
1828190000	CABTITE KT ATG	D.3
1828200000	CABTITE KT BTK b	D.3
1828210000	CABTITE KT BTG b	D.3
1828220000	CABTITE KT ATG b	D.3
1828230000	CABTITE KV T 63-4	D.10
1828240000	CABTITE KV T 63-1	D.10
1828250000	CABTITE SUBD9	D.10

1840000000

1849760000	CABTITE KEL 24/7	D.5
1849770000	CABTITE KEL 16/5	D.5
1849780000	Cabtite Sample Kit	D.2

1860000000

1868550000	DAE M12 SS	C.70
1868560000	DAE M12 PA short	C.69
1868570000	DAE M12 PA long	C.69

1890000000

1898210000	MOPL K3 N FE	B.137
1899630000	MOPL K3 NT FE	B.137

1900000000

1905270000	MOPL K2 N FE	B.135

Order No.	Type	Page
1905280000	MOPL K1 N FE	B.133
1909260000	KDSU M20 BN O SC 2 G16	C.30
1909290000	KDSU M20 BN O SC 2 G20S	C.30
1909300000	KDSU M20 BN O SC 2 G20	C.30
1909310000	KDSU M25 BN O SC 2 G25	C.30
1909320000	KDSU M32 BN O SC 2 G32	C.30
1909330000	KDSU M40 BN O SC 2 G40	C.30
1909340000	KDSU M50 BN O SC 2 G50S	C.30
1909350000	KDSU M50 BN O SC 2 G50	C.30
1909360000	KDSU M63 BN O SC 2 G63S	C.30
1909370000	KDSU M63 BN O SC 2 G63	C.30
1909380000	KSG M20 BN O SC 2 G16	C.42
1909400000	KSG M20 BN O SC 2 G20S	C.42
1909410000	KSG M20 BN O SC 2 G20	C.42
1909420000	KSG M25 BN O SC 2 G25	C.42
1909430000	KSG M32 BN O SC 2 G32	C.42
1909440000	KSG M40 BN O SC 2 G40	C.42
1909450000	KSG M50 BN O SC 2 G50S	C.42
1909460000	KSG M50 BN O SC 2 G50	C.42
1909470000	KSG M63 BN O SC 2 G63S	C.42
1909480000	KSG M63 BN O SC 2 G63	C.42
1909490000	VG M12 - MS 1/EMV	C.16
1909500000	VG M16 - MS 1/EMV	C.16
1909510000	VG M20 - MS 1/EMV	C.16
1909520000	VG M25 - MS 1/EMV	C.16
1909530000	VG M32 - MS 1/EMV	C.16
1909540000	VG M40 - MS 1/EMV	C.16
1909550000	VG M50 - MS 1/EMV	C.16
1909560000	VG M63 - MS 1/EMV	C.16
1909660000	VG M12-K67	C.6
1909670000	VG M16-K67 4-8	C.6
1909680000	VG M16-K67 5-10	C.6
1909690000	VG M20-K67 6-12	C.6
1909700000	VG M20-K67 10-14	C.6
1909710000	VG M25-K67	C.6
1909720000	VG M32-K67	C.6
1909730000	VG M40-K67	C.6
1909740000	VG M50-K67	C.6
1909750000	VG M63-K67	C.6
1909760000	VG PG7-K67	C.6
1909770000	VG PG9-K67	C.6
1909780000	VG PG11-K67	C.6
1909790000	VG PG13,5-K67	C.6
1909800000	VG PG16-K67	C.6
1909810000	VG PG21-K67	C.6
1909820000	VG PG29-K67	C.6
1909830000	VG PG36-K67	C.6
1909840000	VG PG42-K67	C.6
1909850000	VG PG48-K67	C.6
1909860000	VG M16-1/K68	C.7
1909870000	VG M25-1/K68	C.7
1909880000	VG M32-1/K68	C.7
1909890000	VG M40-1/K68	C.7
1909910000	VG M16-1/MS68	C.11
1909920000	VG M25-1/MS68	C.11
1909930000	VG M32-1/MS68	C.11
1909940000	VG M40-1/MS68	C.11
1909950000	VG M50-1/MS68	C.11
1909980000	TS15 60 KLippon K1 CSS	B.133
1909990000	TS15 64 Klippon K11	B.134

1910000000

1910010000	TS15 90 KLippon K2 CSS	B.135
1910020000	TS15 114 Klippon K21 CSS	B.136
1910030000	TS15 155 Klippon K3 CSS	B.137
1910040000	TS15 164 Klippon K31 CSS	B.138
1910050000	TS35/235 KLIPPON K32 CSS	B.139
1910060000	TS35 64 Klippon K4K11	B.140
1910070000	TS35 105 Klippon K41/POK4	B.141
1910080000	TS35/148 KLIPPON K5 CSS	B.142
1910090000	TS35/203 KLIPPON K51POK5	B.143
1910100000	TS35/140 Klippon K52 POK51	B.144
1910110000	TS35/172 KLIPPON K6 CSS	B.145
1910120000	TS35/239 KLIPPON K61POK6	B.146
1910130000	TS35/324 KLIPPON K7 CSS	B.147
1910140000	TS35/260 KLIPPON K71 CSS	B.148
1911380000	KDSU M20 BN O NI 2 G16	C.31
1911390000	KDSU M20 BN O NI 2 G20S	C.31
1911400000	KDSU M20 BN O NI 2 G20	C.31
1911420000	KDSU M25 BN O NI 2 G25	C.31
1911430000	KDSU M32 BN O NI 2 G32	C.31
1911440000	KDSU M40 BN O NI 2 G40	C.31
1911450000	KDSU M50 BN O NI 2 G50S	C.31
1911460000	KDSU M50 BN O NI 2 G50	C.31
1911480000	KDSU M63 BN O NI 2 G63S	C.31
1911490000	KDSU M63 BN O NI 2 G63	C.31
1911510000	KSG M20 BN O NI 2 G16	C.42
1911540000	KSG M20 BN O NI 2 G20S	C.42
1911560000	KSG M20 BN O NI 2 G20	C.42
1911570000	KSG M25 BN O NI 2 G25	C.42
1911580000	KSG M32 BN O NI 2 G32	C.42
1911590000	KSG M40 BN O NI 2 G40	C.42
1911600000	KSG M50 BN O NI 2 G50S	C.42
1911610000	KSG M50 BN O NI 2 G50	C.42
1911620000	KSG M63 BN O NI 2 G63S	C.42
1911630000	KSG M63 BN O NI 2 G63	C.42
1913320000	GWDR M12-NP	C.52

Order No.	Type	Page

1920000000

1921720000	VG H M20 MS	C.14
1921740000	VG H M25 MS	C.14
1921760000	VG H M32 MS	C.14
1921770000	VG H M40 MS	C.14
1928060000	TS15 68 Klippon POK1 CSS	B.166
1928070000	TS15 98 Klippon POK2 CSS	B.167
1928080000	TS15 147 Klippon POK3 CSS	B.168
1928110000	TS35 POK4 Set	B.171
1928130000	TS35 POK51 Set	B.173

1930000000

1937630000	KLIPPON K1 VMQ RAL7001	B.133
1937720000	KLIPPON K71 VMQ RAL7001	B.148
1937730000	KLIPPON K61 VMQ RAL7001	B.146
1937740000	KLIPPON K52 VMQ RAL7001	B.144
1937750000	KLIPPON K51 VMQ RAL7001	B.143
1937800000	KLIPPON K41 VMQ RAL7001	B.141
1937810000	KLIPPON K32 VMQ RAL7001	B.139
1937820000	KLIPPON K31 VMQ RAL7001	B.138
1937830000	KLIPPON K21 VMQ RAL7001	B.136
1937840000	KLIPPON K02 VMQ RAL7001	B.132
1937850000	KLIPPON K01 VMQ RAL7001	B.131
1937860000	KLIPPON K5 VMQ RAL7001	B.142
1937870000	KLIPPON K6 VMQ RAL7001	B.145
1937880000	KLIPPON K7 VMQ RAL7001	B.147
1937890000	KLIPPON K4 VMQ RAL7001	B.140
1937900000	KLIPPON K3 VMQ RAL7001	B.137
1937910000	KLIPPON K11 VMQ RAL7001	B.134
1937920000	KLIPPON K0 VMQ RAL7001	B.130
1937930000	KLIPPON K2 VMQ RAL7001	B.135

1960000000

1966780000	IE-KOK-V1	E.6
1966790000	IE-KOK-V4	E.6
1966810000	IE-KO-HAT	E.5

3010000000

3018950000	MP TBF 30/19	B.194

3070000000

3073000000	MOPL K11 STAHL	B.134
3073020000	MOPL K21 STAHL	B.136
3073040000	MOPL K31 STAHL	B.138
3073050000	MOPL K32 STAHL	B.139
3073060000	MOPL K4 STAHL	B.140
3073070000	MOPL K41 STAHL	B.141
3073080000	MOPL K5 STAHL	B.142
3073090000	MOPL K51 STAHL	B.143
3073100000	MOPL K52 STAHL	B.144
3073110000	MOPL K6 STAHL	B.145
3073120000	MOPL K61 STAHL	B.146
3073130000	MOPL K7 STAHL	B.147
3073140000	MOPL K71 STAHL	B.148

3080000000

3080760000	BD 1 brass	C.71
3080770000	BD 1 ss	C.71

3890000000

3896100000	SP M6 15 MSZN	B.93
3896200000	SP M6 20 MSZN	B.93
3896300000	SP M6 30 MSZN	B.93

7900000000

7906080000	BK 4/E	B.150

8000000000

8000003444	KL SET 12W4 S	B.150
8000003445	KL SET 9Z4 S	B.150
8000003446	KLIPPON K41 2M25AB CSS	B.160
8000003447	KLIPPON K41 3M20AB CSS	B.160
8000003448	KLIPPON POK4 3M20AB CSS	B.184
8000003448	KLIPPON POK4 3M20AB CSS	B.189
8000003589	KLIPPON K41 M25WCSS EX	B.160
8000003590	KLIPPON K41 M25ZCSS EX	B.160
8000003591	KLIPPON K41 M20WCSS EX	B.160
8000003592	KLIPPON K41 M20ZCSS EX	B.160
8000003593	KLIPPON POK4 M20WCSS EX	B.184
8000003593	KLIPPON POK4 M20WCSS EX	B.189
8000003594	KLIPPON POK4 M20ZCSS EX	B.184
8000003594	KLIPPON POK4 M20ZCSS EX	B.189
8000004129	MOPL SET BK4 S	B.153
8000004130	KL SET 5Z2.5 S	B.154
8000004131	KL SET 5A4 S	B.154
8000004132	MOPL SET BK6 S	B.155
8000004133	KL SET 14Z2.5 S	B.156
8000004134	KL SET 13A4 S	B.156
8000004135	MOPL SET BK12 S	B.157
8000004136	KL SET 24Z2.5 S	B.158

Order No.	Type	Page
8000004137	KL SET 21A4 S	B.158
8000004138	KL SET 5W4 S	B.159
8000004139	KL SET 4Z4 S	B.159
8000004140	KL SET 18W4 S	B.161
8000004141	KL SET 15Z4 S	B.161
8000004142	KL SET 32W4 S	B.150
8000004143	KL SET 38Z2.5 S	B.162
8000004143	KL SET 38Z2.5 S	B.184
8000004143	KL SET 38Z2.5 S	B.190
8000004144	KL SET 6A4 S	B.184
8000004144	KL SET 6A4 S	B.186
8000004145	KL SET 10A4 S	B.184
8000004145	KL SET 10A4 S	B.187
8000004146	KL SET 18A4 S	B.184
8000004146	KL SET 18A4 S	B.188
8000004147	KLIPPON K1 1,5M16AB CSS	B.153
8000004148	KLIPPON K1 1M20AB CSS	B.153
8000004149	KLIPPON K11 2M16AB CSS	B.154
8000004150	KLIPPON K11 2M20AB CSS	B.154
8000004151	KLIPPON K2 2M20AB CSS	B.155
8000004152	KLIPPON K21 3M16AB CSS	B.156
8000004153	KLIPPON K3 4M20AB CSS	B.157
8000004154	KLIPPON K31 4M20AB CSS	B.158
8000004155	KLIPPON K4 2M20AB CSS	B.159
8000004158	KLIPPON K5 4M20AB CSS	B.161
8000004159	KLIPPON K52 4M20AB CSS	B.162
8000004160	KLIPPON P0K1 2M16AB CSS	B.184
8000004160	KLIPPON P0K1 2M16AB CSS	B.186
8000004161	KLIPPON P0K2 2M20AB CSS	B.184
8000004161	KLIPPON P0K2 2M20AB CSS	B.187
8000004162	KLIPPON P0K3 4M20AB CSS	B.184
8000004162	KLIPPON P0K3 4M20AB CSS	B.188
8000004164	KLIPPON P0K51 4M20ABCSS	B.184
8000004164	KLIPPON P0K51 4M20ABCSS	B.190
8000004184	KLIPPON K01 1M16AB CSS	B.152
8000004202	KLIPPON K1 M16BCSS EX	B.153
8000004203	KLIPPON K1 M20BCSS EX	B.153
8000004204	KLIPPON K11 M16ZCSS EX	B.154
8000004207	KLIPPON K11 M16ACSS EX	B.154
8000004208	KLIPPON K11 M20ZCSS EX	B.154
8000004209	KLIPPON K11 M20ACSS EX	B.154
8000004210	KLIPPON K2 M20BCSS EX	B.155
8000004211	KLIPPON K21 M16ZCSS EX	B.156
8000004212	KLIPPON K21 M16ACSS EX	B.156
8000004213	KLIPPON K3 M20BCSS EX	B.157
8000004214	KLIPPON K31 M20ZCSS EX	B.158
8000004215	KLIPPON K31 M20ACSS EX	B.158
8000004216	KLIPPON K4 M20WCSS EX	B.159
8000004217	KLIPPON K4 M20ZCSS EX	B.159
8000004218	KLIPPON K5 4M20WCSS EX	B.161
8000004219	KLIPPON K5 4M20ZCSS EX	B.161
8000004220	KLIPPON K52 M20WCSS EX	B.162
8000004221	KLIPPON K52 M20ZCSS EX	B.162
8000004222	KLIPPON P0K1 M16BCSS EX	B.184
8000004222	KLIPPON P0K1 M16BCSS EX	B.186
8000004223	KLIPPON P0K1 M16ACSS EX	B.184
8000004223	KLIPPON P0K1 M16ACSS EX	B.186
8000004224	KLIPPON P0K2 M20BCSS EX	B.184
8000004224	KLIPPON P0K2 M20BCSS EX	B.187
8000004225	KLIPPON P0K2 M20ACSS EX	B.184
8000004225	KLIPPON P0K2 M20ACSS EX	B.187
8000004226	KLIPPON P0K3 M20BCSS EX	B.184
8000004226	KLIPPON P0K3 M20BCSS EX	B.188
8000004228	KLIPPON P0K3 M20ACSS EX	B.184
8000004228	KLIPPON P0K3 M20ACSS EX	B.188
8000004229	KLIPPON P0K51 M20WCSS E	B.184
8000004229	KLIPPON P0K51 M20WCSS E	B.190
8000004230	KLIPPON P0K51 M20ZCSS E	B.184
8000004230	KLIPPON P0K51 M20ZCSS E	B.190
8000004365	KL SET KLIPPON P0K1 BK4	B.184
8000004365	KL SET KLIPPON P0K1 BK4	B.186
8000004366	KL SET KLIPPON P0K2 BK6	B.184
8000004366	KL SET KLIPPON P0K2 BK6	B.187
8000004367	KL SET KLIPPON P0K3BK12	B.184
8000004367	KL SET KLIPPON P0K3BK12	B.188
8000004495	MOPL K1 BKVARIO SET	B.153
8000004496	MOPL K2 BKVARIO SET	B.155
8000004497	MOPL K3 BKVARIO SET	B.157

9000000000

Order No.	Type	Page
9008320000	SDS 0.5X3.0X80	E.17
9008330000	SDS 0.6X3.5X100	E.17
9008340000	SDS 0.8X4.0X100	E.17
9008350000	SDS 1.0X5.5X150	E.17
9008370000	SDIS 0.4X2.5X75	E.15
9008380000	SDIS 0.5X3.0X100	E.15
9008390000	SDIS 0.6X3.5X100	E.15
9008400000	SDIS 0.8X4.0X100	E.15
9008410000	SDIS 1.0X5.5X125	E.15
9008420000	SDIS 1.2X6.5X150	E.15
9008430000	SDIS 1.6X8.0X175	E.15
9008450000	SDIZ 0.6X3.5X100	E.15
9008460000	SDIZ 0.8X4.0X100	E.15
9008470000	SDK PH0	E.17
9008480000	SDK PH1	E.17
9008490000	SDK PH2	E.17
9008500000	SDK PH3	E.17
9008530000	SDK PZ1	E.17
9008540000	SDK PZ2	E.17
9008550000	SDK PZ3	E.17
9008560000	SDIK PH0	E.15
9008570000	SDIK PH1	E.15
9008580000	SDIK PH2	E.15
9008590000	SDIK PH3	E.15
9008640000	SDIZ 0,8X5,5 150/248	E.15
9008850000	SK WSD-S 1,5-10,0	E.19
9008860000	SKS 2,0-8,0	E.19
9008870000	SKS 2,0-8,0 MR	E.19
9008880000	TH-S 9-40	E.19
9008890000	SDIK PZ2	E.15
9008900000	SDIK PZ1	E.15
9008910000	SDIS 1.0X4.5X125	E.15
9009010000	SDS 1.2X6.5X150	E.17
9009020000	SDS 0.8X4.0X125	E.17
9009030000	SDS 0.4X2.5X75	E.17
9009070000	SK 10,0x125	B.120
9009160000	SD TH20	B.130
9009170000	SD TH15	E.17
9009180000	SD TH10	E.17
9009730000	SDI Set S2.5-5.5/PH1/2	E.16
9009740000	SD Set S2.5-5.5/PH1/2	E.18
9009750000	SYSTEM 11+1	E.20

9010000000

Order No.	Type	Page
9010110000	SDS 0.6X3.5X200	E.17
9015900000	FLECAFIX 11/24	E.13
9015980000	FLECAFIX 24/36	E.13

9030000000

Order No.	Type	Page
9037160000	SDS 0.4X2.0X60	E.17

9200000000

Order No.	Type	Page
9202510000	WK 1/4" C6,3 E6,3	E.11
9204780000	KOBBS 19X75	E.4
9204790000	IE-K0K-V5	E.6
9204810000	K0K-46X46	E.6
9204820000	K0K-52X36	E.6
9204830000	K0K-65X36	E.6
9204840000	K0K-68X68	E.6
9204850000	K0K-86X36	E.6
9204860000	K0K-91X36	E.6
9204870000	K0K-112X36	E.6
9204880000	K0S-M16	E.4
9204900000	K0S-M25	E.4
9204910000	K0S-M32	E.4
9204920000	K0S-M40	E.4
9204930000	K0S-PG9	E.4
9204940000	K0S-PG11	E.4
9204950000	K0S PG 13/M20	E.4
9204960000	K0S-PG16	E.4
9204970000	K0S-PG21	E.4
9204980000	K0S-PG29	E.4
9204990000	K0S-PG36	E.4
9205000000	K0HS 9.5+19	E.4
9205010000	K0HS 19	E.4
9205020000	K0PD 10.0	E.5
9205030000	KOBBS 9.5X50	E.4
9205040000	KOBBS 19X55	E.4
9205550000	SDI Set S2.0-5.5	E.16
9205560000	SD Set S2.0-5.5	E.18
9205690000	SDIS 0.4X2.0X60	E.15
9205700000	SDIS 1.0X4.5X175	E.15
9205710000	SDIS 1.0X5.5X175	E.15

9500000000

Order No.	Type	Page
9500870000	ES TBF M10 ss	B.194
9500950000	MP TBF 56/30	B.196
9500960000	MP TBF 49/30	B.196
9502700000	ES TBF M6 brass	B.194
9502710000	ES TBF M10 brass	B.194
9502720000	MP TBF 19/15	B.194
9502730000	MP TBF 30/30	B.195
9502740000	MP TBF 37/30	B.195
9502750000	MP TBF 60/30	B.197
9502800000	TBF 49/30/18 7035	B.196
9502810000	TBF 56/30/18 7035	B.196
9502820000	TBF 60/37/18 7035	B.198
9502830000	TBF 60/60/18 7035	B.198
9502840000	TBF 49/30/21 trsp	B.196
9502850000	TBF 56/30/21 trsp	B.196
9502860000	TBF 60/37/21 trsp	B.198
9502870000	TBF 60/60/21 trsp	B.198
9502910000	MP TBF 60/37	B.198
9502920000	MP TBF 60/60	B.198
9502930000	EF TBF 19/15	B.194
9502950000	EF TBF 30/30	B.195
9502960000	EF TBF 37/30	B.195
9502990000	EF TBF 60/30	B.197
9503000000	EF TBF 60/37	B.198
9503010000	EF TBF 60/60	B.198
9505240000	ES TBF M6 ss	B.194

9510000000

Order No.	Type	Page
9510210000	Klippon P0K 1 Ex	B.166
9510220000	Klippon P0K 2 Ex	B.167
9510230000	Klippon P0K 4 Ex	B.171
9510240000	Klippon P0K 5 Ex	B.172
9510250000	Klippon P0K 51 Ex	B.173
9510260000	Klippon P0K 6 Ex	B.174
9510270000	Klippon P0K 7 Ex	B.175
9510280000	Klippon P0K 8 Ex	B.177
9510290000	Klippon P0K 9 Ex	B.178
9510300000	Klippon P0K 91 Ex	B.179
9510310000	Klippon P0K 10 Ex	B.180
9510320000	Klippon P0K 3 Ex	B.168
9510330000	Klippon P0K 31 Ex	B.169
9510340000	Klippon P0K 32 Ex	B.170
9510350000	Klippon P0K 71 Ex	B.176
9510360000	Klippon P0K 11 Ex	B.181
9510370000	Klippon P0K 12 Ex	B.182
9510470000	Klippon P0K 91	B.179
9510510000	Klippon P0K 32	B.170
9510520000	Klippon P0K 71	B.176
9510530000	Klippon P0K 11	B.181
9510540000	Klippon P0K 12	B.182
9510570000	P0K M0PL 0808	B.166
9510580000	P0K M0PL 0811	B.167
9510590000	P0K M0PL 1212	B.171
9510600000	P0K M0PL 1222	B.172
9510610000	P0K M0PL 1616	B.173
9510620000	P0K M0PL 1626	B.174
9510630000	P0K M0PL 1636	B.175
9510640000	P0K M0PL 2525	B.181
9510650000	P0K M0PL 2540	B.182
9510660000	P0K M0PL 2560	B.179
9510670000	P0K M0PL 4040	B.180
9510680000	P0K M0PL 0816	B.168
9510690000	P0K M0PL 0819	B.169
9510700000	MP P0K 32	B.170
9510710000	P0K M0PL 1656	B.176
9510900000	MF P0K small	B.166
9510910000	MF P0K big	B.171
9511190000	EB K71/P0K10	B.148
9511210000	EB K51/P0K5	B.143
9511220000	EB K52/P0K	B.144
9511230000	EB K61/P0K6	B.146

9520000000

Order No.	Type	Page
9526840000	KLIPPON K1 EX	B.133
9526850000	KLIPPON K11 EX	B.134
9526860000	KLIPPON K2 EX	B.135
9526870000	KLIPPON K21 EX	B.136
9526880000	KLIPPON K3 EX	B.137
9526890000	KLIPPON K31 EX	B.138
9526900000	KLIPPON K32 EX	B.139
9526910000	KLIPPON K4 EX	B.140
9526920000	KLIPPON K41 EX	B.141
9526930000	KLIPPON K5 EX	B.142
9526940000	KLIPPON K51 EX	B.143
9526950000	KLIPPON K52 EX	B.144
9526960000	KLIPPON K6 EX	B.145
9526970000	KLIPPON K61 EX	B.146
9526980000	KLIPPON K7 EX	B.147
9526990000	KLIPPON K71 EX	B.148
9527590000	KLIPPON K MF KIT 25	B.141
9529080000	KLIPPON K MF KIT 16	B.142
9529090000	KLIPPON K0 RAL7001	B.130
9529100000	KLIPPON K01 RAL7001	B.131
9529110000	KLIPPON K02 RAL7001	B.132
9529120000	KLIPPON K1 RAL7001	B.133
9529130000	KLIPPON K11 RAL7001	B.134
9529140000	KLIPPON K2 RAL7001	B.135
9529150000	KLIPPON K21 RAL7001	B.136
9529160000	KLIPPON K3 RAL7001	B.137
9529170000	KLIPPON K31 RAL7001	B.138
9529180000	KLIPPON K32 RAL7001	B.139
9529190000	KLIPPON K4 RAL7001	B.140
9529200000	KLIPPON K41 RAL7001	B.141
9529210000	KLIPPON K5 RAL7001	B.142
9529220000	KLIPPON K51 RAL7001	B.143
9529230000	KLIPPON K52 RAL7001	B.144
9529240000	KLIPPON K6 RAL7001	B.145
9529250000	KLIPPON K61 RAL7001	B.146
9529260000	KLIPPON K7 RAL7001	B.147
9529270000	KLIPPON K71 RAL7001	B.148

9530000000

Order No.	Type	Page
9535170000	MPC 07/12/07 7035	B.202
9535180000	MPC 07/12/07 trsp	B.202
9535210000	MPC 07/12/12 7035	B.202
9535220000	MPC 07/12/12 trsp	B.202
9535230000	MPC 12/12/07 7035	B.203
9535240000	MPC 12/12/07 trsp	B.203
9535290000	MPC 12/17/07 7035	B.203
9535300000	MPC 12/17/07 trsp	B.203
9535310000	MPC 12/17/10 7035	B.204
9535320000	MPC 12/17/10 trsp	B.204
9535330000	MPC 12/17/12 7035	B.204
9535340000	MPC 12/17/12 trsp	B.204
9535370000	MPC 17/17/07 7035	B.205
9535380000	MPC 17/17/07 trsp	B.205
9535430000	MPC 17/17/15 7035	B.206
9535440000	MPC 17/17/15 trsp	B.206
9535470000	MPC 17/25/10 7035	B.206
9535480000	MPC 17/25/10 trsp	B.206
9535540000	MP MPC 07/12	B.202
9535550000	MP MPC 12/12	B.203
9535560000	MP MPC 12/17	B.203
9535570000	MP MPC 17/17	B.205
9535580000	MP MPC 17/25	B.206
9535590000	HG MPC	B.202
9535600000	MF MPC	B.202
9535680000	FPC 20/20/13 trsp	B.209
9535690000	FPC 20/20/13 7035	B.209
9535700000	FPC 20/30/13 trsp	B.209
9535710000	FPC 20/30/13 7035	B.209
9535720000	FPC 20/40/13 trsp	B.210
9535730000	FPC 20/40/13 7035	B.210
9535740000	FPC 30/30/13 trsp	B.210
9535750000	FPC 30/30/13 7035	B.210
9535760000	FPC 30/40/13 trsp	B.211
9535770000	FPC 30/40/13 7035	B.211
9535810000	FPC 40/60/13 7035	B.211
9535820000	FPC 40/60/13 trsp	B.211
9535920000	MP FPC 20/20	B.209
9535930000	MP FPC 20/30	B.209
9535940000	MP FPC 20/40	B.210
9535950000	MP FPC 30/30	B.210
9535960000	MP FPC 30/40	B.211
9535980000	MP FPC 40/60	B.211
9535990000	HG FPC	B.209
9536040000	MF FPC	B.209

9910000000

Order No.	Type	Page
9918130000	CROSS-KEY UNIVERSAL	E.23
9918140000	CROSS-KEY UNIVERSAL S	E.23
9918150000	CROSS-KEY MASTER	E.23
9918370000	DMS MANUELL 0,5-1,7	E.11
9918380000	DMS MANUELL 2,0-8,0	E.11
9918390000	DMSI MANUELL 0,5-1,7	E.12
9918400000	DMSI MANUELL 2,0-8,0	E.12
9918410000	WK SI 0,4x2,5	E.12
9918420000	WK SI 0,5x3,0	E.12
9918430000	WK SI 0,6x3,5	E.12
9918440000	WK SI 0,8x4,0	E.12
9918450000	WK SI 1,0x5,5	E.12
9918460000	WK IK PH0	E.12
9918470000	WK IK PH1	E.12
9918480000	WK IK PH2	E.12
9918490000	WK IK PZ0	E.12
9918500000	WK IK PZ1	E.12
9918510000	WK IK PZ2	E.12
9918520000	WK S 0,4x2,5	E.11
9918530000	WK S 0,5x3,0	E.11
9918540000	WK S 0,6x3,5	E.11
9918550000	WK S 0,8x4,0	E.11
9918560000	WK S 1,0x5,5	E.11
9918570000	WK K PH0	E.11
9918580000	WK K PH1	E.11
9918590000	WK K PH2	E.11
9918600000	WK K PZ0	E.11
9918610000	WK K PZ1	E.11
9918620000	WK K PZ2	E.11

Addresses worldwide

AE United Arab Emirates
Weidmuller Middle East FZE
P.O. Box 8591, SAIF-Zone
Sharjah U. A. E.
Phone +971 6 5572723
Fax +971 6 5572724
wme.info@weidmueller.com

AR Argentina
CPI SA
Bauness 2660
1431 Buenos Aires
Phone +54 11 45238008
Fax +54 11 45220546
info@cpi.com.ar
www.cpi.com.ar

AT Austria
Weidmüller GmbH
IZ NOE Sued Straße 2b,
Obj. M59
2355 Wiener Neudorf
Phone +43 2236 6708-0
Fax +43 2236 6708-899
office.at@weidmueller.com

AU Australia
Weidmüller Pty. Ltd.
P.O.Box 6944
Huntingwood Drive 43
Huntingwood,
NSW, 2148
Phone +61 2 9671-9999
Fax +61 2 9671-9911
info@weidmuller.com.au
www.weidmuller.com.au

AZ Azerbaijan
West Industries Ltd.
Caspian Plaza, 5-th Floor
44 J. Jabbarly Str., Baku
Phone +99412 596 15 15
Fax +99412 596 14 93
sales@west-i.com

BA Bosnia and Herzegovina
Representative Office
Weidmüller Interface
GmbH & Co. KG
Ustanicka 189, III sprat,
lokal 7a
11050 Beograd
Phone +381 11 288 5274
Fax +381 11 288 5274
zoran.rabrenovic@
weidmueller.com

BH ES ELEKTROSISTEM d.o.o.
Bul. Vojvode S.
Stepanovica kod br. 272
78000 BiH - Banja Luka
Phone +387 51 420-340
Fax +387 51 420-341
elsist@inecco.net
www.elektrosistem.ba

BE Belgium
Weidmüller Benelux B.V.
Mechelsesteenweg 519 bus
6 en 7
1930 Nossegem
Phone +32 2 752 4070
Fax +32 2 751 3606
info@weidmueller.be
www.weidmueller.be

BG Bulgaria
Weid-Bul EOOD
1756 Sofia
13, bul. "Kliment Ohridski"
Phone +359 2 9632560
Fax +359 2 9631098
sofia@weidbul.com
www.weidbul.com

BH Bahrain
Khayber Trading Company
P.O. Box 1976 Manama,
Phone +973 720747
Fax +973 720331
khayber@batelco.com.bh

BR Brazil
Weidmüller Conexel do Brasil
Conexões Elétricas Ltda.
Rua Garcia Lorca, 176
09695-900, Sao Paulo SP
Phone +55 11 43669600
Fax +55 11 43621677
vendas@weidmueller.com.br
www.weidmueller.com.br

BY Belarus
Technikon Ltd.
Nezavisimosti pr.177-9
Minsk 220125
Phone +375 17 3931177
Fax +375 17 3930080
wm@technikon.by

CA Canada
W Interconnections CANADA
Ltd.
10 Spy Court, Markham,
Ontario L3 R5 H6
Phone +1 905 475-1507
Fax +1 905 475-2798
info1@weidmuller.ca
www.weidmuller.ca

CH Switzerland
Weidmüller Schweiz AG
Rundbuckstraße 2
8212 Neuhausen am Rheinfall
Phone +41 52 6740707
Fax +41 52 6740708
info@weidmueller.ch
www.weidmueller.ch

CL Chile
Felipe Bahamondes S.A./
ATS AGRO
Maria Luisa Santander 0475
Casilla 3425
Santiago
Phone +56 2 341-1271
Fax +56 2 341-1275
felipe@atsintech.com

CPI CHILE LTDA
Av. Presidente Frei Montalva
6001-47, Conchali -
Region Metropolitana -
Santiago
cpi@cpichile.cl

CN China
Weidmüller Interface
International Trading
(Shanghai) Co., Ltd.
25F, BM Intercontinental
Business Center,
100 Yutong Road,Shanghai
200070
P.R. China
Phone +86 21 22195008
Fax +86 21 22195009
www.cnweidmuller.com

CO Colombia
Automatización Avanzada S. A.
Carrera 97 No.24c, 23 B4
4 Bogotá D. C.
Phone +57 1 5478510
Fax +57 1 4223044
comercial@
automatizacionavanzada.com
www.
automatizacionavanzada.com

CR Costa Rica
ELVATRON S.A.
la Uruca 400 Norte
Banco Costa Rica
San José Costa Rica
Phone +506 2 961060
Fax +506 5 200609
dirk.haase@elvatron.com
www.elvatron.com

CZ Czech Republic
Weidmüller s. r. o.
Lomnického 5/1705
14000 Praha 4
Phone +420 2 44001400
Fax +420 2 44001499
office@weidmueller.cz
www.weidmueller.cz

DE Germany
Weidmüller GmbH & Co. KG
Postfach 3054
32720 Detmold
Ohmstraße 9
32758 Detmold
Phone +49 5231 1428-0
Fax +49 5231 1428-116
weidmueller@weidmueller.de
www.weidmueller.de

DK Denmark
Wexøe A/S
Lejrvej 31
3500 Vaerloese
Phone +45 45465800
Fax +45 45465801
wexoe@wexoe.dk
www.wexoe.dk

EC Ecuador
Elsystec S. A. Electricidad
Sistemas y Tecnología
Vasco de Contreras N35-25
y Mañosca, Quito
Phone +593 2 2456510
Fax +593 2 2456755
Elsystec@uio.satnet.net

EE Estonia
Representative Office
Weidmüller Interface
GmbH & Co. KG
Udens str. 12-118
Riga, LV-1007
Latvia
Phone +371 29254766
Fax +371 67624562
ilgonis.rudaks@
weidmueller.com

Soots Interface OÜ
Pärnu mnt 142
11317 Tallinn
Phone +372 5296177
Fax +372 6096933
info@sootsinterface.ee
www.sootsinterface.ee

EG Egypt
Standard Electric (OMEGA)
87, Mohamed Farid Street
Heliopolis, Cairo
Phone +20 26422977
Fax +20 26422955
stdelec@rite.com

ES Spain
Weidmüller S. A.
Narcis Monturiol 11-13
Pol. Ind. Sudoeste
08960 Sant Just Desvern
Barcelona
Phone +34 93 4803386
Fax +34 93 3718055
weidmuller@weidmuller.es
www.weidmuller.es

FI Finland
JUHA-ELEKTRO OY
P. O. Box 57, 641 Helsinki
Kylvöpolku 6, 680 Helsinki
Phone +358 10 8328 100
Fax +358 10 8328 109
info@juha-elektro.fi
www.juha-elektro.fi

FR France
Weidmüller E. U. R. L.
12, Chaussée Jules César
B.P. 263 Osny
95523 Cergy Pontoise Cedex
Phone +33 1 34245500
Fax +33 1 34245501
mail@weidmuller.fr

GB Great Britain
Weidmüller Ltd
Klippon House
Centurion Court Office
Meridian East, Meridian
Business Park
Leicester, LE19 1TP
Phone +44 1162 823470
Fax +44 1162 893582
marketing@weidmuller.co.uk
www.weidmuller.co.uk

GR Greece
Electrorama S.A.
1 An. Martali Str.
41335 Larissa
Phone +30 2410 552533188
Fax +30 2410 283463189
valvizos@electrorama.com.gr

GA Contact Solutions
11, Ippokratous Str.
14452 Metamorfosi Attika
Phone +30 210 2823233
Fax +30 210 2823233
gasaless@gmail.com

HK Hong Kong
Weidmuller (Hong Kong)
Limited
Unit 1617, The Metropolis
Tower, No.10, Metropolis
Drive, Hunghom, Kowloon
Phone +852 31548082
Fax +852 31548099
info-hk@weidmueller.de
Hong Kong

HR Croatia
Elektro Partner d.o.o.
Slavonska Avenija 24/6
10000 Zagreb
Phone +385 1 6184793
Fax +385 1 6184795
elektropartner@zg.t-com.hr

HU Hungary
Weidmüller Kft
Gubacsi út 6
1097 Budapest
Phone +36 1 3827700
Fax +36 1 3827701
info@weidmueller.hu

ID Indonesia
PT. Nego Electrindo
Ruko Mega Grosir Cempaka
Mas, Blok I No 20 – 22
Jl. Let.Jend. Suprato –
Jakarta 10640
Phone +62 21 42882255
Fax +62 21 42882266
sales@negoelectrindo.co.id

IE Ireland
Please contact
Weidmüller Ltd.
in Great Britain

IL Israel
A.U.Shay Ltd.
P.O. Box 10049
Embar Street 23/25
49222 Petach-Tikva
Phone +972 3 9233601
Fax +972 3 9234601

ATEKA Ltd.
4, Ha'Tavor lane
Industrial area Segula
49691 Petach-Tikva
Phone +972 73 2001311
Fax +972 3 9244245
marketing@ateka.co.il
www.ateka.co.il

IN India
Weidmuller
Electronics India Pvt. Ltd
Plot # 32, 3rd Floor,
North Court
Lane North Avenue,
Opp Jogger's Park
Kalyani Nagar, Maharastra
411006 Pune
Phone +91 9049800960
Nitish.Rajan@weidmueller.de

IS Iceland
Samey Automation Center
Lyngas 13, 210 Garoabaer,
Phone +354 510 5200
Fax +354 510 5201
samey@samey.is

IT Italy
Weidmüller S.R.L.
Via Albert Einstein 4
20092 Cinisello Balsamo
Milano
Phone +39 02 660681
Fax +39 02 6124945
weidmuller@weidmuller.it
www.weidmuller.it

JO Jordan
HORIZONS
P.O.Box: 330607
Amman Jordan 11133
Phone +962 6 4882114
Fax +962 6 4882115
horizons@go.com.jo

JP Japan
Nihon Weidmüller Co. Ltd.
Sphere Tower Tennoz,
2-2-8 Higashi-Shinagawa,
Shinagawa-Ku,
Tokyo 140-0002
Phone +81 3 6711-5300
Fax +81 3 6711-5333
www.weidmuller.co.jp

KR Korea
Weidmuller Korea Co. Ltd.
6F Seokyoung B/D,
242-54 Nonhyun-dong,
Gangnam-gu
Seoul, 135-830
Phone +82 2 5160003
Fax +82 2 5160090
info@weidmuller.co.kr

KW Kuwait
KANA CONTROLS General
Trading & Cont. CO. W.L.L.
Al Rai Industrial Area,
Plot 28-30, St. 31
P.O.Box: 25593
Safat, 13016
Phone +966-474 1373/4
Fax +966-474 1537
info@kanacontrols.com

LB Lebanon
Progress Engineering &
Trading Enterprises
Al Nahr Street, Beirut
Phone +961 1 444664
Fax +961 1 561880
progress@inco.com.lb

LT Lithuania
Representative Office
Weidmüller Interface
GmbH & Co. KG
Udens str. 12-118
Riga, LV-1007
Latvia
Phone +371 29254766
Fax +371 67624562
ilgonis.rudaks@
weidmueller.com

ELEKTROS IRANGA
Tinklu g.29a, 5319 Panevezys
Phone +370 45582828
Fax +370 45582727
info@eliranga.lt

LU Luxembourg
Please contact
Weidmüller Benelux B.V.
in the Netherlands

LV Latvia
Representative Office
Weidmüller Interface
GmbH & Co. KG
Udens str. 12-118
Riga, LV-1007
Latvia
Phone +371 29254766
Fax +371 67624562
ilgonis.rudaks@
weidmueller.com

SIA "ABI4"
Daugavgrivas str. 31b
1007 Riga
Phone +371 67470999
Fax +371 67465637
abi_4@tvnet.lv

MD Moldova
BERHORD A&D srl
44, srt. Sarmizegetusa 37/3
Off 414. b-dul Decebal, 3,
Chisinau, MD 2001
Phone +373 22 507137
Fax +373 22 507134
atiuleanu@berhord.com

ME Montenegro
Representative Office
Weidmüller Interface
GmbH & Co. KG
Ustanicka 189, III sprat,
lokal 7a
11050 Beograd
Phone +381 11 288 5274
Fax +381 11 288 5274
zoran.rabrenovic@
weidmueller.com

MK Macedonia
Representative Office
Weidmüller Interface
GmbH & Co. KG
Ustanicka 189, III sprat,
lokal 7a
11050 Beograd
Phone +381 11 288 5274
Fax +381 11 288 5274
zoran.rabrenovic@
weidmueller.com

ELEKTRO – SMK dooel
UL. III Makedonska brigada b.b.
1000 Skopje
Phone +389 22 460 295
Fax +389 22 460 298
Elektro-smk@telekabel.net.mk

MT Malta
E. S. S., Electrical Supplies
& Services Ltd
104 J. Sciberras Str.
Hamrun HMR 08
Phone +356 21 255 777
Fax +356 21 255 999
robert@ess.com.mt

MU Mauritius
MUBELO Electrical Ltd
Office 26, Gateway building,
St Jean Road, Quatre Bornes
Phone +230 467 0989
Fax +230 465 4051
richard.mubelo@orange.mu

Group companies DE
Agency abroad DE
Without own Agency DE

MX Mexico
W Interconnections,
S.A. DE C.V.
Blvd. Hermanos Serdán
No. 698
Col. San Rafael Oriente
Puebla, C.P. 72029
Phone +52 222 22686227
clientes@weidmuller.com.mx

MY Malaysia
Connect Plus Technology
Sdn Bhd
No. 43, Jalan PJS, 11/22,
Bandar Sunway,
46150 Petaling Jaya
Selangor Darul Ehsan
Phone +60 3 5633 7363
Fax +60 3-5633 6562
paul@cptech.com.my
www.cptech.com.my

NL Netherlands
Weidmüller Benelux B.V.
Franciscusweg 221
1216 SE Hilversum
Postbus 1505
1200 BM Hilversum
Phone +31 35 6261261
Fax +31 35 6232044
info@weidmuller.nl
www.weidmuller.nl

NO Norway
Siv. Ing. J. F. Knudtzen A/S
Billingstadsletta 97
P.O. Box 160
1378 Nesbru
Phone +47 66 983350
Fax +47 66 980955
firmapost@jfknudtzen.no
www.jfknudtzen.no

NZ New Zealand
Cuthbert S. Steward Limited
27 Te Puni Street
POB 38496
Petone, Wellington
Phone +64 4 5686156
Fax +64 4 5686056
info@weidmueller.de

OM Oman
DAN INTERNATIONAL LLC.
PO.BOX 2901
111 Seeb
Phone +968 503 677
Fax +968 503 755
yedu@danintl.com

PE Peru
IMPEXINCA S.A.C.
Calle Ortiz de Zevallos N°105,
18 Lima, Miraflores,
Phone +511 447 5608
info@impexinca.pe

J & W CIA. S.A.
Calle 6 Mz. D Lte. 23
Urb. Ind. Grimanesa
Callao 01
Phone +51 1 57 22539
Fax +51 1 57 20152
lespinoza@jwcia.com
www.jwcia.com

PH Philippines
Enclosure Systems Specialists Inc
Room 103 Narra Building
2276 Don Chino Roces
Avenue
Makati City 1231
Phone +63 2 813 8580
Fax +63 2 813 8596
sales_encsys@pldtdsl.net

PK Pakistan
Kana Controls (Pak)
Apartment No. 33 C III
Chenab Block,
Allama Iqbal Town
Lahore, Pakistan
Phone +92 42 5419948
+92 42 7845160
Fax +92 42 5422895
nadeem@kanapak.com
www.kanapak.com

PL Poland
Weidmüller Sp. z o.o.
Ul. Goledzinowska 10
03-302 Warszawa
Phone +48 22 5100940
Fax +48 22 5100941
biuro@weidmuller.com.pl
www.weidmuller.pl

PT Portugal
Weidmüller Sistemas de
Interface S. A.
Estrada Outeiro Polima,
R. Augusto
Dias da Silva, Lote B, Esct. 2
2785-515 Abóboda -São
Domingos de Rana
Phone +351 21 4459191
Fax +351 21 4455871
www.weidmueller.pt

QA Qatar
Doha Motors Trading Co.
(Technical Division)
Post Box No. 145
Airport Road
Doha - Qatar
Phone +974 465 1441
Fax +974 465 0925
dmtctech@qatar.net.qa

RO Romania
Weidmüller Interface
GmbH & Co.KG
Representative Office - Romania
Brasov Business Park
Ionescu Crum Street, no. 1
1st Tower, 1st Floor, Office 4
RO - 500446 Brasov
Romania
Phone +40 268 446 222
Fax +40 268 446 224
claudiu.totea@weidmueller.com

RS Serbia
Representative Office
Weidmüller Interface
GmbH & Co. KG
Ustanicka 189, III sprat,
lokal 7a
11050 Beograd
Phone +381 11 288 5274
Fax +381 11 288 5274
zoran.rabrenovic@
weidmueller.com

ES-YU Elektrosistem
Pariske komune 41
11070 Novi Beograd, Serbia
Phone +381 11 3018660
Fax +381 11 2693608
esyu@eunet.rs

RU Russia
OOO Weidmüller
Warshavskoye highway, 25A,
bld. 6
117105 Moskau
Phone +7 4 95 771-6940
Fax +7 4 95 771-6941
info@weidmueller.ru
www.weidmueller.ru

SA Saudi-Arabia
Al Abdulkarim Holding Co.
P.O Box. 4
Dammam 31411
Phone +9668337110
Fax +9668338242
salehsk@akh.com.sa
www.weidmueller.ae

Saudi Electric Supply Co.
P.O. Box 3298
Al Khobar 31952
Phone +966 3 882 9546227
Fax +966 3 882 9547
Safdar.malik@sesco-ge.com

SE Sweden
Weidmüller AB
Axel Daniessons väg 271
P.O. box 31025
200 49 Malmö
Phone +46 (0) 7 71 43 00 44
Fax +46 (0) 40 37 48 60
info@weidmuller.se
www.weidmuller.se

SG Singapore
Weidmüller Pte. Ltd.
70 Bendemeer Road
#04-03 Luzerne
Singapore 339940
Phone +65 6841 5311
Fax +65 6841 5377
info@weidmuller.com.sg
www.weidmuller.com.sg

SI Slovenia
ELEKTROSPOJI d.o.o.
Stegne 25, 1000 Ljubljana
Phone +386 15113810
Fax +386 15111604
info@elektrospoji.si
www.elektrospoji.si

SK Slovakia
ELEKTRIS s.r.o.
Elektrárenská 1
83104 Bratislava
Phone +421 2 49200113
Fax +421 2 49200119
bratislava@elektris.sk

TH Thailand
Pisanu Engineering Co., Ltd
800/43-45 Soi Trakulsuk
Asoke-dindaeng Road,
Dindaeng, Bangkok 10400
Phone +66 2 245 9113
Fax +66 2 6429220
jayasankar@pisanu.co.th
www.pisanu.co.th

TN Tunisia
Please contact
Weidmüller E.U.R.L.
in France

TR Turkey
Weidmüller Elektronik Ticaret
Ltd. Sirketi
Kavacik Mah. Orhan Veli Kanik
Caddesi 9/1
34810 Beykoz – Istanbul
Phone +90 216 5371070 (Pbx)
Fax +90 216 5371077
info@weidmuller.com.tr
www.weidmuller.com.tr

TW Taiwan
Fittatek Co., Ltd.
12F No. 185 Fu-Kuo Road,
Tso Ying Dist, Kaohsiung
Phone +886 7 556 0858
Fax +886 7 556 3279
stanley@fittatek.com.tw
www.fittatek.com.tw

Eucan Enterprise Ltd.
No. 145 He Ping 2nd Rd
Kaohsiung
Phone +886 7 715 6610
Fax +886 7 715 8748
mark@eucan.com.tw
www.eucan.com.tw

UA Ukraine
TEKO INTERFACE
Lomonosova str. 73g
03022 Kiev
Phone +38 044 3740640
Fax +38 044 3740642
weidmueller@tekointerface.com
www.tekointerface.com.ua

US United States
W-Interconnections Inc.
821 Southlake Boulevard,
Virginia - Richmond 23236
Phone +1 804 7942877
Fax +1 804 3792593
info@weidmuller.com
www.weidmuller.com

UY Uruguay
REWO Uruguay S.A
AV. Bolivia 2001 Esq Rocafuerte
Carrasco Montevideo 11300
Phone / Fax +598 260 48439
clorda@rewouruguay.com.uy

UZ Usbekistan
OOO "Elektro Potential"
Gani Mavljanova str., 2B
100084 Tashkent
Phone +998 98-3003821
Fax +998 71-1249286
mz1958@yandex.ru

VE Venezuela
Somerinca C.A.
Quinta Sagrado Corazon
de Jesus -
3ra Transversal -
Los Dos Caminos,
Caracas 1070 - A
Phone +58 212 2352748
Fax +58 212 2399341
klocmoeller@cantv.net
www.kmsomerinca.com.ve

VN Vietnam
AUMI Co., Ltd
E1, La Thanh Hotel,
218 Doi Can Street,
Lieu Giai Ward, Ba Dinh District,
Hanoi City
Phone +84 4762 8601
Fax +84 4266 1391
aumi@aumi.com.vn

Linh Kim Hai Co,. Ltd
78 Hoa Cuc Street Ward 7,
Phu Bhuan District,
Ho Chi Minh City
Phone +84 8517 1717
Fax +84 8517 1818
lkh@linhkimhai.com.vn

ZA South Africa
Phambili Interface (Pty) Ltd
P.O. Box 193,
1609 Johannesburg
5 Bundo Road, Sebenza
1610 Johannesburg,
Endenvale
Phone +27 11 452 1930
Fax +27 11 452 6455
sales@radinterface.co.za
www.radinterface.co.za

DE Other countries
Weidmüller Interface GmbH
& Co. KG
Postfach 3030
32720 Detmold
Klingenbergstraße 16
32758 Detmold
Phone +49 5231 14-0
Fax +49 5231 14-292083
info@weidmueller.de
www.weidmueller.com

We cannot guarantee that there are no mistakes in the publications or software provided by us to the customer for the purpose of making orders. We try our best to quickly correct errors in our printed media.

All orders are based on our general terms of delivery, which can be reviewed on the websites of our group companies where you place your order. On demand we can also send the general terms of delivery to you.

Weidmüller – Partner in Industrial Connectivity

As experienced experts we support our customers and partners around the world with products, solutions and services in the industrial environment of power, signal and data. We are at home in their industries and markets and know the technological challenges of tomorrow. We are therefore continuously developing innovative, sustainable and useful solutions for their individual needs. Together we set standards in Industrial Connectivity.

Weidmüller Interface GmbH & Co. KG
Klingenbergstraße 16
32758 Detmold, Germany
T +49 5231 14-0
F +49 5231 14-292083
info@weidmueller.com
www.weidmueller.com

4 050118 224597

Order number: 1420920000/03/2013/SMDM

Общество с ограниченной ответственностью «МосЧип» ИНН 7719860671 / КПП 771901001
Адрес: 105318, г.Москва, ул.Щербаковская д.3, офис 1107

Данный компонент на территории Российской Федерации

Вы можете приобрести в компании MosChip.

Для оперативного оформления запроса Вам необходимо перейти по данной ссылке:

http://moschip.ru/get-element

Вы можете разместить у нас заказ для любого Вашего проекта, будь то серийное производство или разработка единичного прибора.

В нашем ассортименте представлены ведущие мировые производители активных и пассивных электронных компонентов.

Нашей специализацией является поставка электронной компонентной базы двойного назначения, продукции таких производителей как XILINX, Intel (ex.ALTERA), Vicor, Microchip, Texas Instruments, Analog Devices, Mini-Circuits, Amphenol, Glenair.

Сотрудничество с глобальными дистрибьюторами электронных компонентов, предоставляет возможность заказывать и получать с международных складов практически любой перечень компонентов в оптимальные для Вас сроки.

На всех этапах разработки и производства наши партнеры могут получить квалифицированную поддержку опытных инженеров.

Система менеджмента качества компании отвечает требованиям в соответствии с ГОСТ Р ИСО 9001, ГОСТ РВ 0015-002 и ЭС РД 009

Офис по работе с юридическими лицами:

105318, г.Москва, ул.Щербаковская д.3, офис 1107, 1118, ДЦ «Щербаковский»

Телефон: +7 495 668-12-70 (многоканальный)

Факс: +7 495 668-12-70 (доб.304)

E-mail: info@moschip.ru

Skype отдела продаж:
moschip.ru
moschip.ru_4
moschip.ru_6
moschip.ru_9