# iCE40LM4K Sensor Evaluation Kit

## User's Guide

January 2014
EB83_01.0

## Introduction

Thank you for choosing the Lattice iCE40LM4K Sensor Evaluation Kit. This guide describes how to begin using the iCE40LM4K Sensor Evaluation Kit, an easy-to-use platform for rapidly prototyping system control designs using an iCE40LM FPGA. Along with the evaluation board and accessories, this kit includes a pre-loaded demo that allows communication between the iCE40LM4k Sensor Evaluation Kit and a Qualcomm Snapdragon APQ8060A board (not included in the package and may be purchased from Intrinsyc). The content of this user's guide includes an overview of the features of the board and a step by step guide to using the iCE40LM4K Sensor Evaluation Kit with the Qualcomm Snapdragon APQ8060A.

***Figure 1. iCE40LM4K Daughter Card***

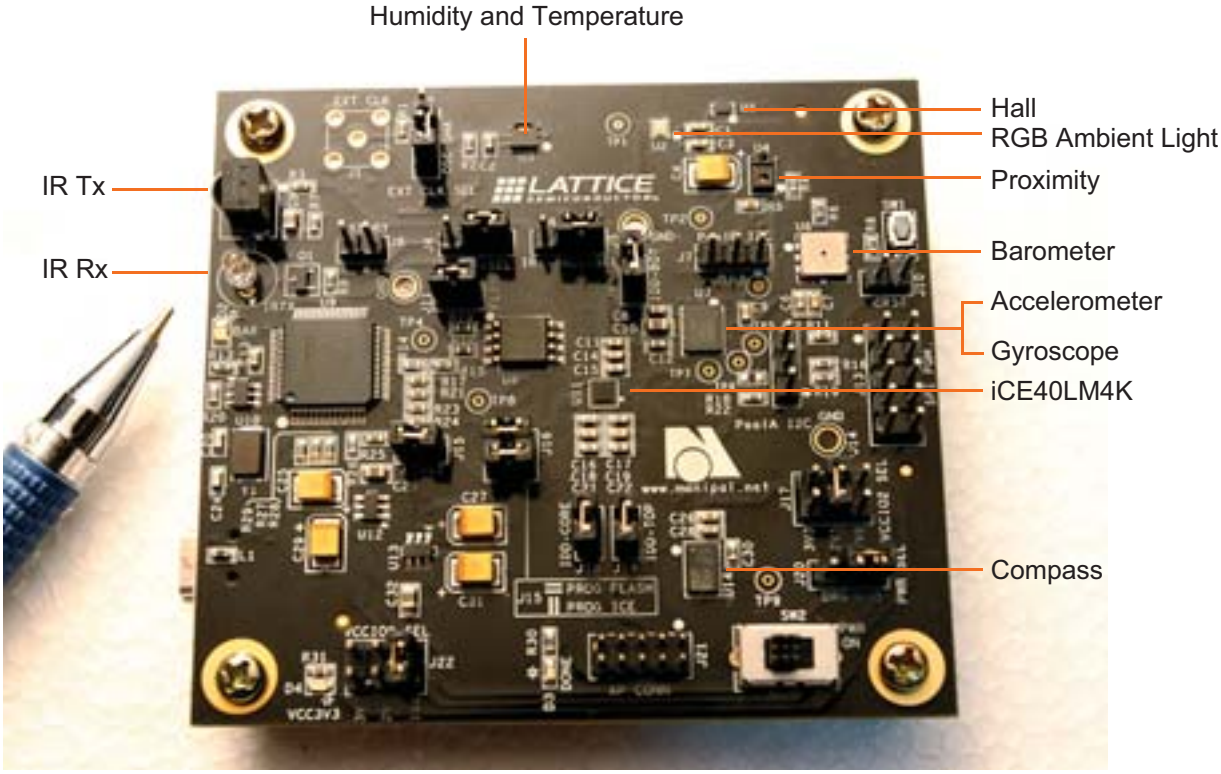


*CAUTION: Static electricity can severely shorten the lifespan of electronic components. Be careful when handling the iCE40LM4K Sensor Evaluation Kit to prevent damage from ESD.*

## Features

The iCE40LM4K Sensor Evaluation Kit includes:

- **iCE40LM4K Evaluation Board** – The ICE40LM4k Evaluation Board features the following on-board components and circuits:
  - iCE40LM4K Device in the 25 WLCSP Package
  - High-Current LED Output
  - Infrared Transmit and Receive
  - Barcode LED/Emulation
  - Configuration SPI Flash
  - On-board FT2232HL for USB Programming/Interface
  - Numerous Sensors
  - Proximity Sensor (AMS-TAOS TMD27711)
  - RGB Color, Infrared, and Temperature Sensors (Maxim MAX44006)
  - Barometric Pressure Sensor (Bosch BMP085)
  - Accelerometer and Gyro (ST Micro LSM330DLC)
  - Magnetometer/Compass/Accelerometer (ST Micro LSM303DLHCTR)
  - Humidity and Temperature Sensor (Sensirion SHT20)
  - Hall Sensor (Rohm BU52051NVX)
- **SMA Connector for External Clock Input**
- **On-Board Oscillator**

In addition to the iCE40LM4K Evaluation Board, an adapter board for connection to Dragon Board and a connector cable are also included. This secondary PCB connected by a cable allows the iCE40LM4k Sensor Evaluation Kit to interface with a Qualcomm 8060A Dragon Board (Dragon Board is available separately and not sold by Lattice). When connected properly, a sensor hub demonstration can be conducted.

## Sensor Hub Demo Setup

The demo setup consists of the Intrinsyc Dragon Board Gen2, Sensor Fusion Board, and flexible connecting cable.

To set up the Sensor Hub demo, connect the Sensor Fusion Board to the Intrinsyc Adapter board which is placed on the Intrinsyc Dragon Board Gen2 as shown in Figure 2

***Figure 2. Intrinsyc Dragon Board Gen2***

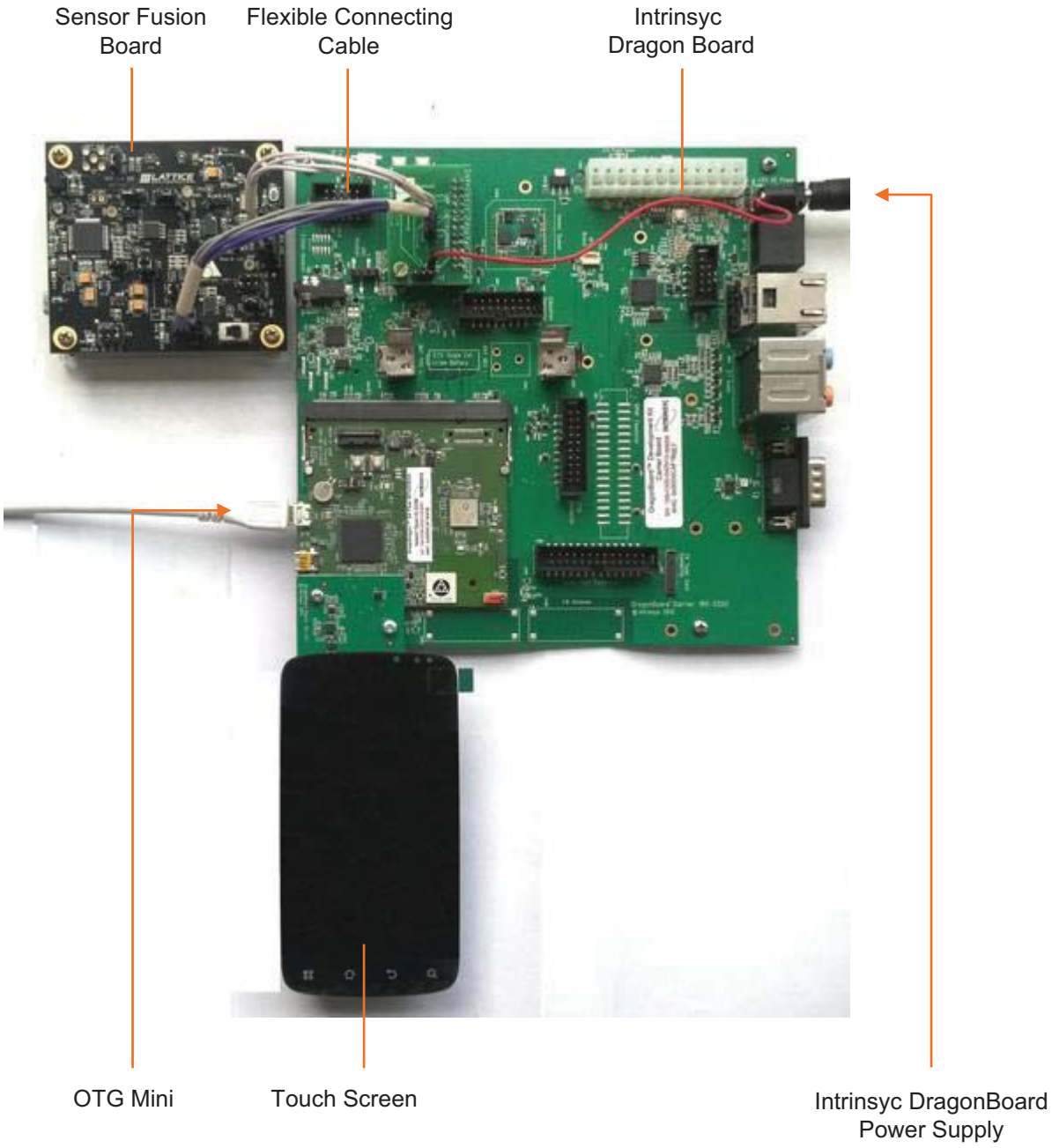

## Sensor Fusion Board Default Jumper Settings

This section provides the details of the Sensor Fusion Board jumper settings:

- Set J2 jumper on OSC mode in EXT CLK.
- Set J4 jumper on BAR.
- Set J5 jumper on HALL.
- Do not set J7 jumper.
- Set J8 jumper.
- Do not set J10 jumper.
- Do no set J11 jumper.
- Set J12 jumper.
- Do not set J15 jumper.
- Set both the J16 jumpers vertically.
- Set jumper on IDD-CORE and IDD-TOP (J18 & J19).
- Set VCCIO0 (J22) to 1.8V.
- Set VCCIO2 (J17) set to 3.3V.
- Set J20 jumper on USB mode.

## Connecting the Sensor Fusion Board to the Intrinsyc Dragon Board

To connect the Sensor Fusion Board to the Intrinsyc Dragon Board

1. Power-off the Intrinsyc Dragon Board.
2. Connect the Intrinsyc Dragon Board end of the processor configuration cable to the Intrinsyc Adapter board mounted on the Intrinsyc Dragon Board.
    i. The marked pin of the cable connector should be connected to pin 1 of the connector on the Intrinsyc Adapter board near the white dot.
3. Connect the smaller connector on other end of the cable to the J21 connector of the Sensor Fusion Board.
    i. The marked pin of the cable connector should be connected to pin 1 of the J21 connector near the white dot.
4. Connect the larger connector on the other end of the cable to the J13 connector of the Sensor Fusion Board.
    i. The marked pin of the cable connector should be connected to pin 1 of the J21 connector near the white dot.
5. Power-on the Intrinsyc Dragon Board after the above connections are completed.

Note: Do not connect the mini USB power cable to the Sensor Fusion Board when it is connected to the Intrinsyc Dragon Board.

Figure 3 shows the connections between the Sensor Fusion Board and the Intrinsyc Dragon Board.

***Figure 3. Connecting Sensor Fusion Board to Intrinsyc Dragon Board***

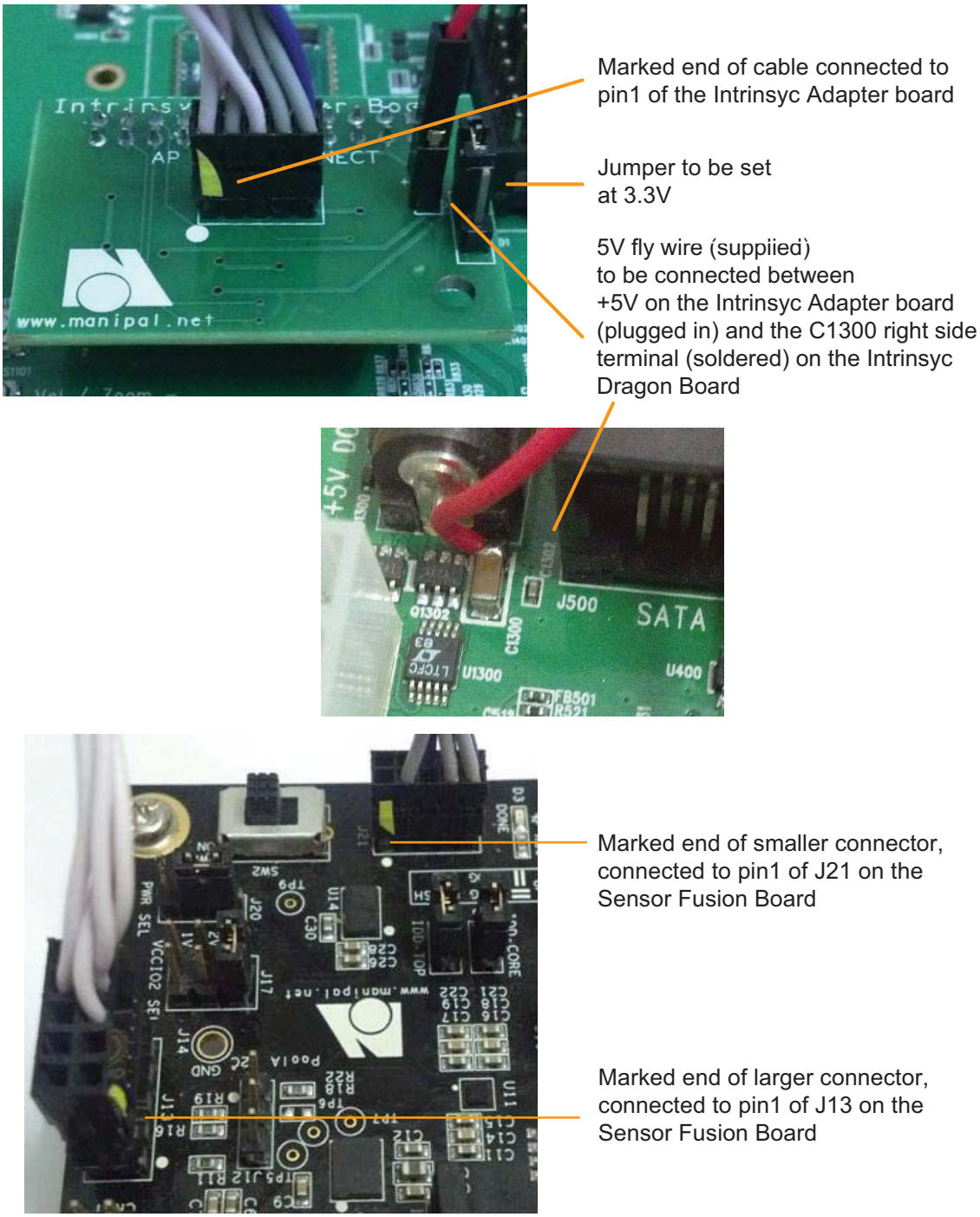

## Sensor Fusion Board Details

Figure 4 shows the details of the Sensor Fusion Board.

***Figure 4. Sensor Fusion Board***

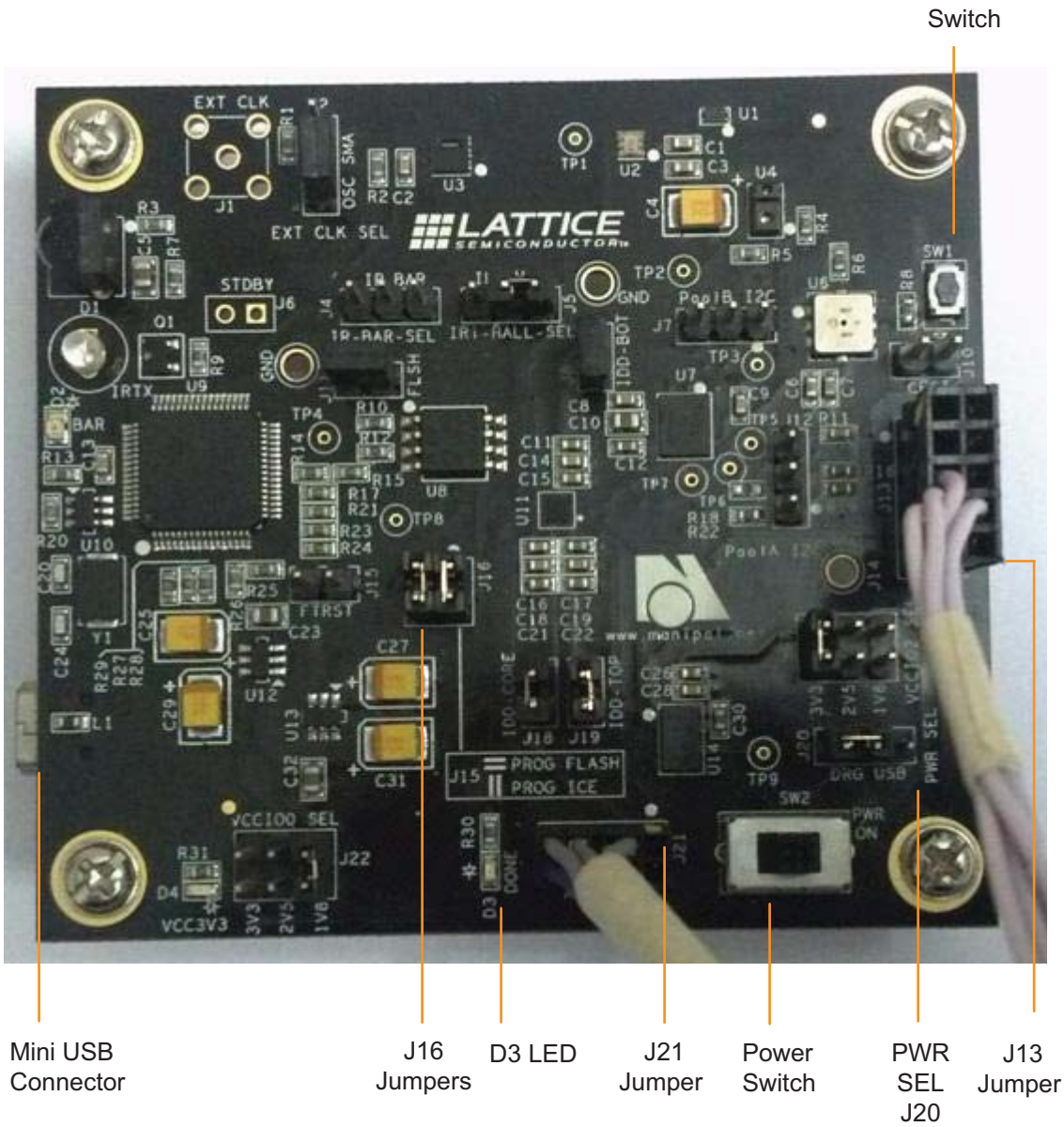

## Flashing System Image and Boot Image to Intrinsyc Dragon Board

Note that this procedure is not required if the Intrinsyc Dragon Board has already been flashed with the system image and boot image (cd *Lightning_Demos_Drop_WITH_APK_INSTALL/Dragonboard_boot_images/*).

To flash the system image and boot image to the Intrinsyc Dragon Board:

1. Connect the Intrinsyc Dragon Board USB port to your host system through the OTG (mini-USB).
   i. Download and install android-sdk. Android-sdk for Linux and Windows environment at http://developer.android.com/sdk/index.html.

      Set <Installation path>/android_sdk/platform-tools/ to the PATH variable.
2. Run the command below in the terminal/command prompt.
   ```
   #sudo -s
   ```

   Note: This command is applicable only for Linux machines. For Windows machine administrative permission is necessary.
3. Reboot the Intrinsyc Dragon Board in fastboot mode.
   i. Keep Button Vol / Zoom + pressed on the Intrinsyc Dragon Board during restart.
      If the board is already On in adb mode, use the command below for fastboot mode
      ```
      #adb reboot bootloader
      ```
   ii. When the Intrinsyc Dragon Board is in FASTBOOT mode, a white screen comes on with only Intrinsyc name displayed on it.
   iii. Execute the command below in the terminal/command prompt to list the fastboot device number and its name.
      ```
      #fastboot devices
      ```

   The board is now ready to be flashed with boot.img.

4. Enter the command below to flash system image.
   ```
   #fastboot flash system system.img
   ```

   If flashing is successful, OKAY and Finished comments are displayed on the terminal.

5. Enter the command below to flash boot.img
   ```
   #fastboot flash boot boot.img
   ```

   If flashing is successful, OKAY and Finished comments are displayed on the terminal.

6. Enter the command below reboot the board for current boot.img.
   ```
   #fastboot reboot
   ```

7. After reboot, go to **Settings** > **Developer options** > **Stay awake**.

## Installing Sensor Hub apk to Android

To flash the system image and boot image to the Intrinsyc Dragon Board:

1. Connect the Intrinsyc Dragon Board USB port to your host system through the OTG (mini-USB).
2. Run the command below in the terminal/command prompt.
   ```
   #sudo -s
   ```

   Note: This command is applicable only for Linux machines. For Windows machine administrative permission is necessary.
3. Use below commands on the terminal to establish and verify 'adb' connection.
   ```
   #adb kill-server
   #adb start-server
   #adb devices
   ```

   If the connection is successful, the device id is displayed on the terminal.
4. Run the command below to install the Sensor Hub apk to the Intrinsyc Dragon Board.
   ```
   #cd Lightning_Demos_Drop_WITH_APK_INSTALL/Sensor_Hub_Demo_Quick_Strart
   /Android_Apllication
   ```

   Note: This step should be performed only if not currently in the

   *Lightning_Demos_Drop_WITH_APK_INSTALL/Sensor_Hub_Demo_Quick_start/Android_Apllication/* folder

   ```
   #adb install Sensor_Hub_Demo.apk
   ```

## Demo Procedure

To execute the demo:

1. Restart Intrinsyc Dragon Board by removing and re-plugging in the power supply, with the Sensor Fusion Board connected to it.

   When connecting the Sensor Fusion Board to Intrinsyc Dragon Board, make sure that jumper J20 on the Sensor Fusion Board is in DRG mode.
2. Wait for Android boot sequence to complete and the home screen to appear.
3. Unlock the screen. Go to the Android application menu and open **Sensor_Hub_LP3.5k_Intrinsyc**.
4. Wait for the Processor Configuration to be completed. This is indicated by the lighting of the D3 LED on the Sensor Fusion board.
5. The sensor data is displayed on the Sensor_Hub_LP3.5k_Intrinsyc application.

## Sensor_Hub_LP3.5k_Intrinsyc Application Features

The Sensor_Hub_LP3.5k_Intrinsyc application provides the following features:

- Temperature and pressure data gives the atmosphere pressure in kPa and room temperature in degree Celcius.
- Compass image points to the magnetic north w.r.t the Sensor Fusion Board.
- Light sensor progress bar indicates the intensity of light form 0 – 4000 lux.
- Accelerometer GUI indicates acceleration in x,y and z direction. The dots indicate the direction and acceleration.
- Gyroscope GUI shows the graphical meter to display the angular rate in x,y and z direction.
- Humidity data gives humidity of the environment in %RH(Relative Humidity).

Ambient RGB GUI indicates Red, Green, Blue light values.

Figure 5 shows the Sensor_Hub_LP3.5k_Intrinsyc application interface.

***Figure 5. Sensor_Hub_LP3.5k_Intrinsyc Application Interface***

## Troubleshooting

If the Android application does not respond, perform the following procedure:

1. Close the Sensor_Hub_LP3.5k_intrinsyc process running in background.

   In the Android menu, go to
   **Settings > Applications > Manage Applications > Sensor_Hub_LP3.5k_intrinsyc Force Stop**
2. Restart the Intrinsyc Dragon Board.
3. Open the Sensor_Hub application from Android menu and application is ready to receive all sensor's data.
4. If the android application crashes while being opened, it means that the library file has not been copied.

   Run the command below to install the Sensor Hub apk to the Intrinsyc Dragon Board.
   ```
   #cd Lightning_Demos_Drop_WITH_APK_INSTALL/Sensor_Hub_Demo_Quick_Strart
   /Android_Apllication
   ```

   Note: This step should be performed only if not currently in the

   *Lightning_Demos_Drop_WITH_APK_INSTALL/Sensor_Hub_Demo_Quick_start/Android_Apllication/* folder

   ```
   #adb install Sensor_Hub_Demo.apk
   ```

## Technical Support Assistance

e-mail: techsupport@latticesemi.com

Internet: www.latticesemi.com

## Revision History

| Date | Version | Change Summary |
|---|---|---|
| January 2014 | 01.0 | Initial release. |

© 2014 Lattice Semiconductor Corp. All Lattice trademarks, registered trademarks, patents, and disclaimers are as listed at www.latticesemi.com/legal. All other brand or product names are trademarks or registered trademarks of their respective holders. The specifications and information herein are subject to change without notice.

# Appendix A. Sensor Fusion Board Schematic Diagrams

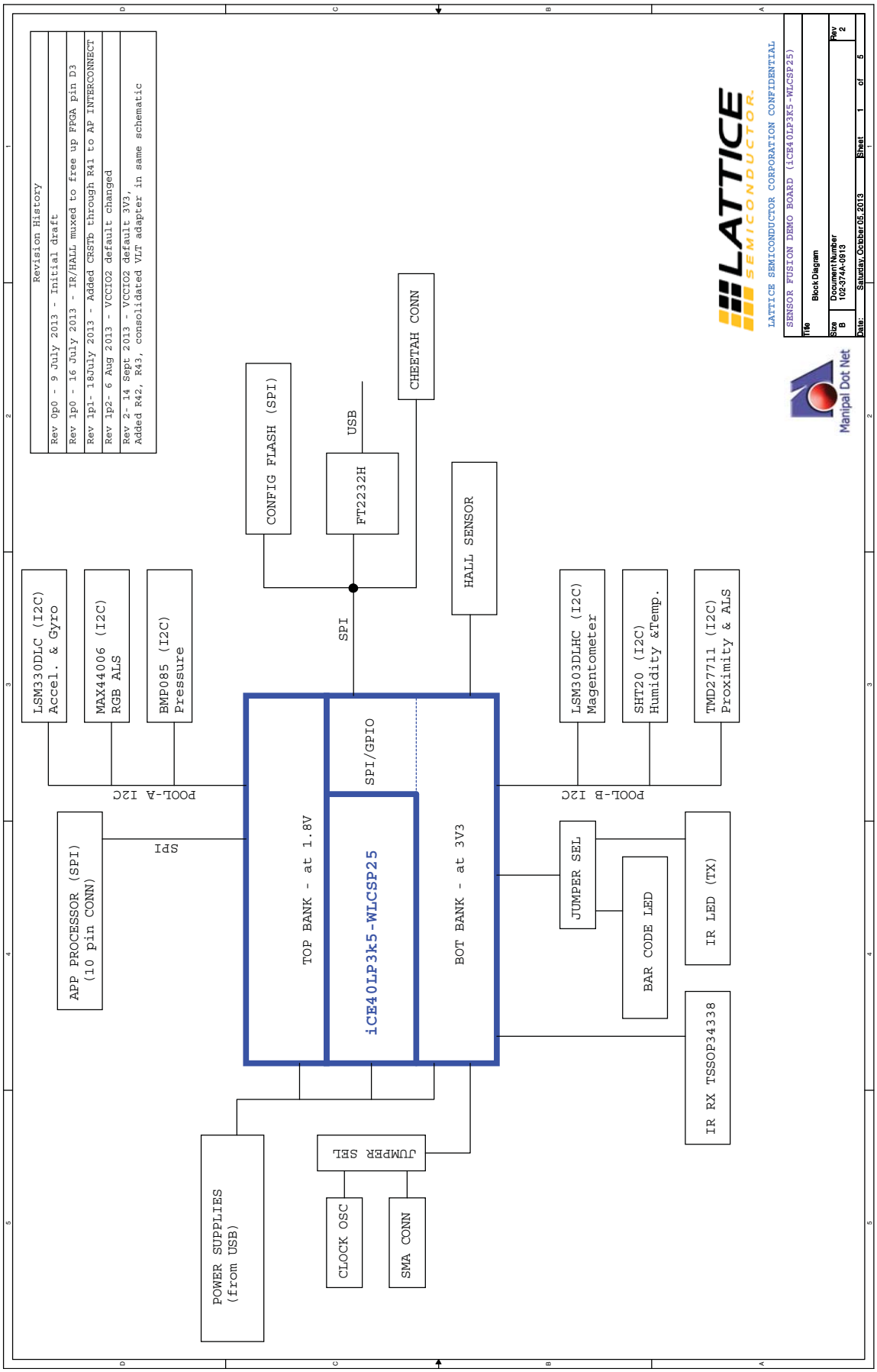

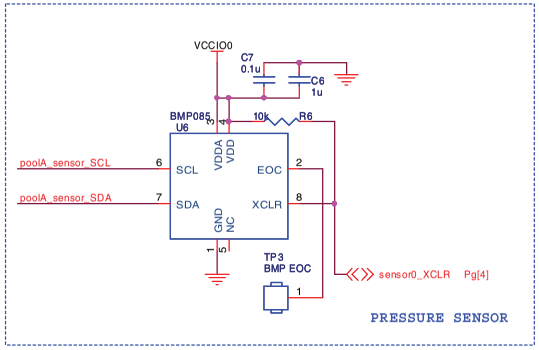


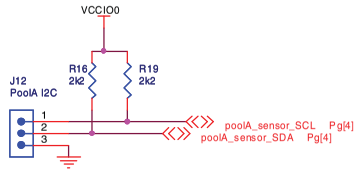


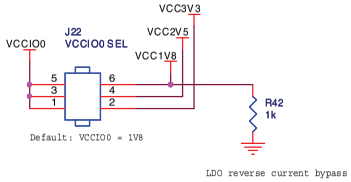


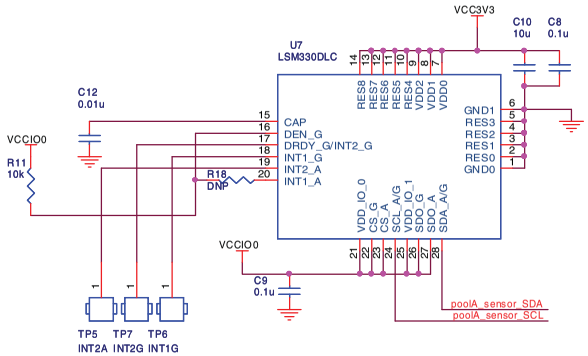


Notes:
- Gyro and Accelerometer interfaces are both set to I2C
- I2C address LSB for both Gyro and Accelerometer is '1'
- SPI for both Gyro and Accelerometer is disabled

GYROSCOPE & ACCELEROMETER SENSOR

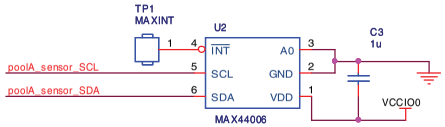


RGB ALS SENSOR

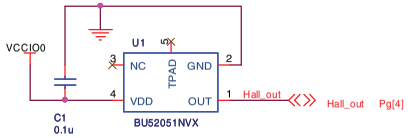


HALL SENSOR

LATTICE SEMICONDUCTOR

LATTICE SEMICONDUCTOR CORPORATION CONFIDENTIAL

Manipal Dot Net

| | | |
|---|---|---|
| SENSOR FUSION DEMO BOARD (iCE40LP3K5-WLCSP25) | | |
| Title: Pool-A I2C Sensors | | |
| Size: B | Document Number: 102-374A-0913 | Rev: 2 |
| Date: Saturday, October 05, 2013 | Sheet 2 of 5 | |

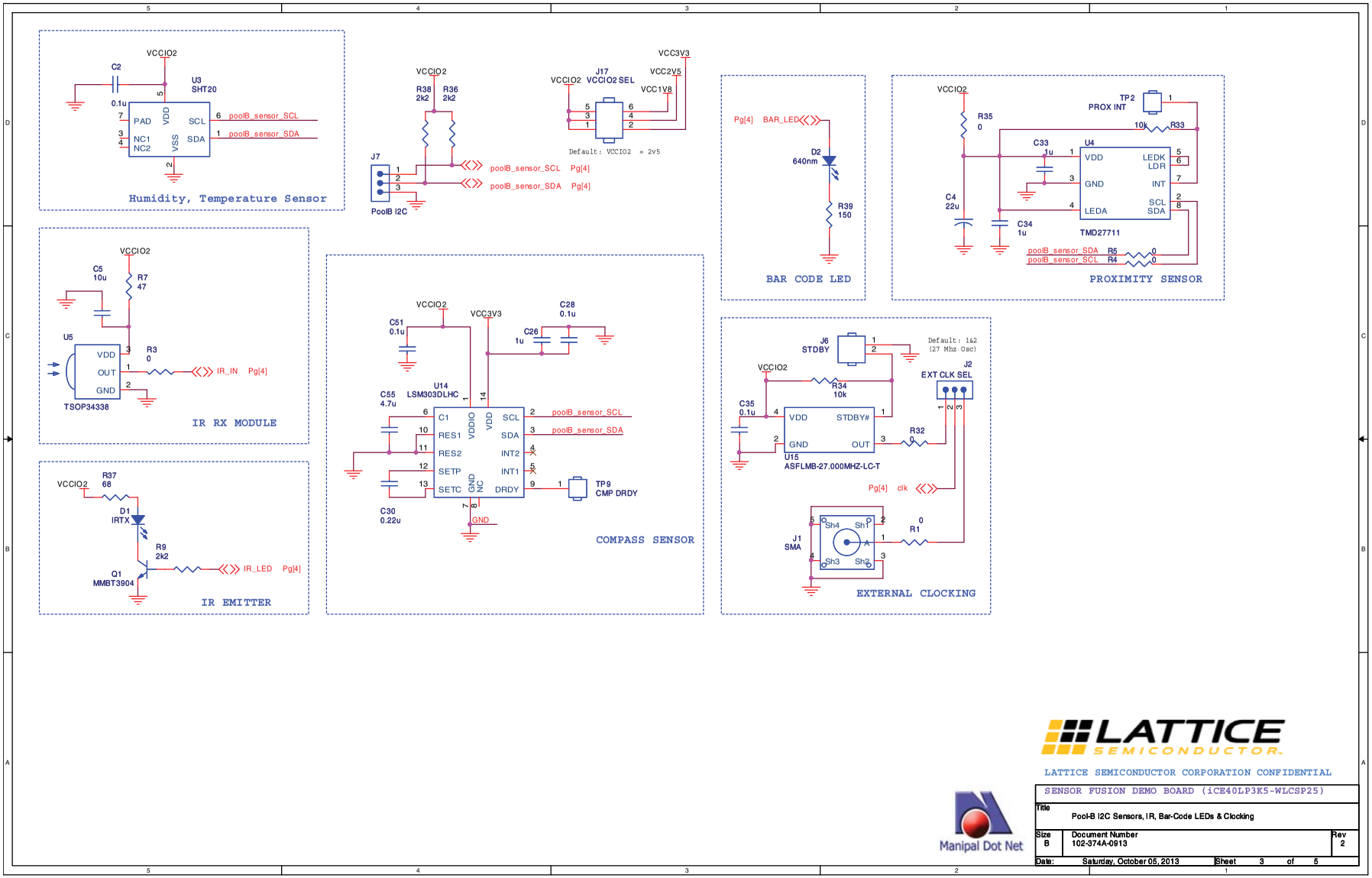


LATTICE SEMICONDUCTOR

LATTICE SEMICONDUCTOR CORPORATION CONFIDENTIAL

Manipal Dot Net

| | | |
|---|---|---|
| SENSOR FUSION DEMO BOARD (iCE40LP3K5-WLCSP25) | | |
| Title: Pool-B I2C Sensors, IR, Bar-Code LEDs & Clocking | | |
| Size: B | Document Number: 102-374A-0913 | Rev: 2 |
| Date: Saturday, October 05, 2013 | Sheet 3 of 5 | |

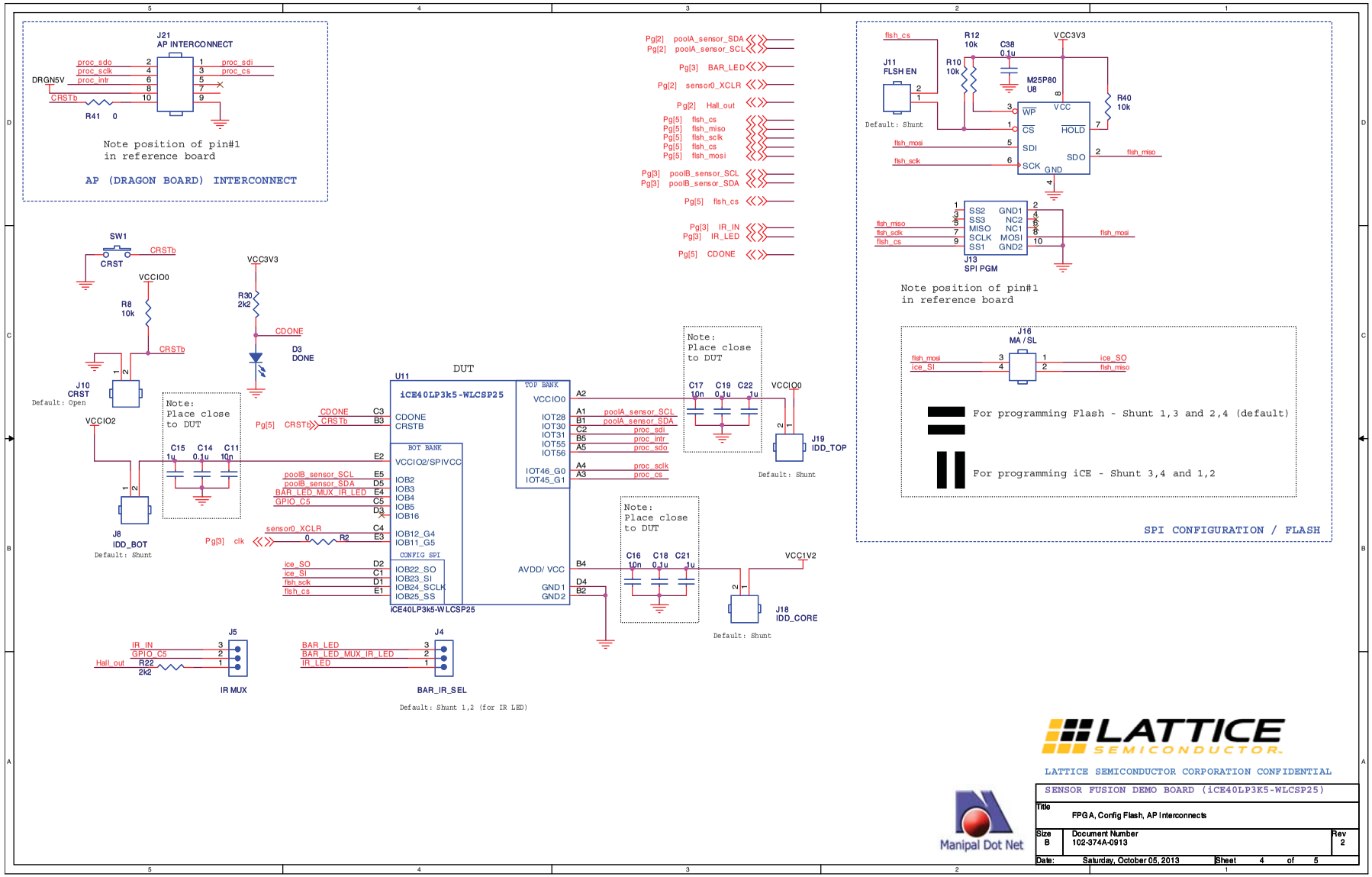
J21
AP INTERCONNECT
proc_sdo
proc_sclk
proc_intr
DRGN5V
CRSTb
R41 0
proc_sdi
proc_cs
Note position of pin#1
in reference board
AP (DRAGON BOARD) INTERCONNECT
Pg[2] poolA_sensor_SDA
Pg[2] poolA_sensor_SCL
Pg[3] BAR_LED
Pg[2] sensor0_XCLR
Pg[2] Hall_out
Pg[5] flsh_cs
Pg[5] flsh_miso
Pg[5] flsh_sclk
Pg[5] flsh_cs
Pg[5] flsh_mosi
Pg[3] poolB_sensor_SCL
Pg[3] poolB_sensor_SDA
Pg[5] flsh_cs
Pg[3] IR_IN
Pg[3] IR_LED
Pg[5] CDONE
SW1
CRST
CRSTb
VCCIO0
R8
10k
CRSTb
J10
CRST
Default: Open
VCCIO2
J8
IDD_BOT
Default: Shunt
VCC3V3
R30
2k2
CDONE
D3
DONE
Note:
Place close
to DUT
C15 C14 C11
1u 0.1u 10n
DUT
U11
iCE40LP3k5-WLCSP25
CDONE
CRSTB
BOT BANK
VCCIO2/SPIVCC
IOB2
IOB3
IOB4
IOB5
IOB16
IOB12_G4
IOB11_G5
CONFIG SPI
IOB22_SO
IOB23_SI
IOB24_SCLK
IOB25_SS
iCE40LP3k5-WLCSP25
TOP BANK
VCCIO0
IOT28
IOT30
IOT31
IOT55
IOT56
IOT46_G0
IOT45_G1
AVDD/ VCC
GND1
GND2
Pg[5] CRSTb
poolB_sensor_SCL
poolB_sensor_SDA
BAR_LED_MUX_IR_LED
GPIO_C5
sensor0_XCLR
Pg[3] clk
R2
ice_SO
ice_SI
flsh_sclk
flsh_cs
poolA_sensor_SCL
poolA_sensor_SDA
proc_sdi
proc_intr
proc_sdo
proc_sclk
proc_cs
Note:
Place close
to DUT
C17 C19 C22
10n 0.1u 1u
VCCIO0
J19
IDD_TOP
Default: Shunt
Note:
Place close
to DUT
C16 C18 C21
10n 0.1u 1u
VCC1V2
J18
IDD_CORE
Default: Shunt
J5
IR_IN
GPIO_C5
Hall_out
R22
2k2
IR MUX
J4
BAR_LED
BAR_LED_MUX_IR_LED
IR_LED
BAR_IR_SEL
Default: Shunt 1,2 (for IR LED)
flsh_cs
J11
FLSH EN
Default: Shunt
R12
10k
R10
10k
C38
0.1u
VCC3V3
M25P80
U8
WP
CS
SDI
SCK
VCC
HOLD
SDO
GND
R40
10k
flsh_mosi
flsh_sclk
flsh_miso
J13
SPI PGM
SS2
SS3
MISO
SCLK
SS1
GND1
NC2
NC1
MOSI
GND2
Note position of pin#1
in reference board
J16
MA / SL
fish_mosi
ice_SI
ice_SO
fish_miso
For programming Flash - Shunt 1,3 and 2,4 (default)
For programming iCE - Shunt 3,4 and 1,2
SPI CONFIGURATION / FLASH
LATTICE SEMICONDUCTOR
LATTICE SEMICONDUCTOR CORPORATION CONFIDENTIAL
Manipal Dot Net
SENSOR FUSION DEMO BOARD (iCE40LP3K5-WLCSP25)
Title
FPGA, Config Flash, AP Interconnects
Size
B
Document Number
102-374A-0913
Rev
2
Date:
Saturday, October 05, 2013
Sheet 4 of 5

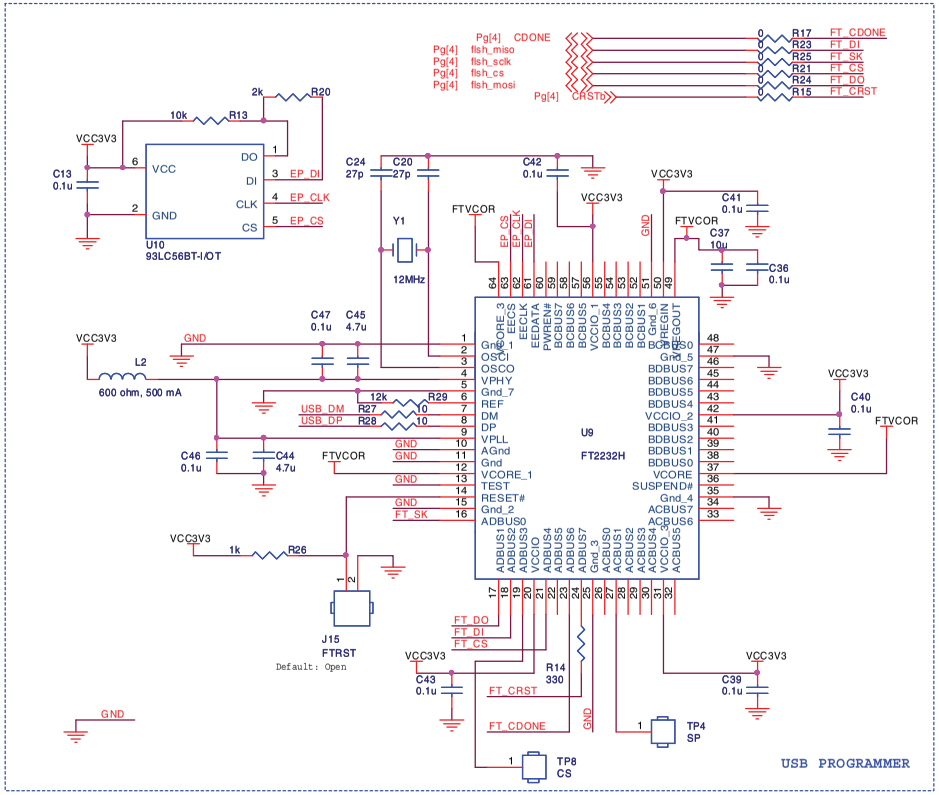


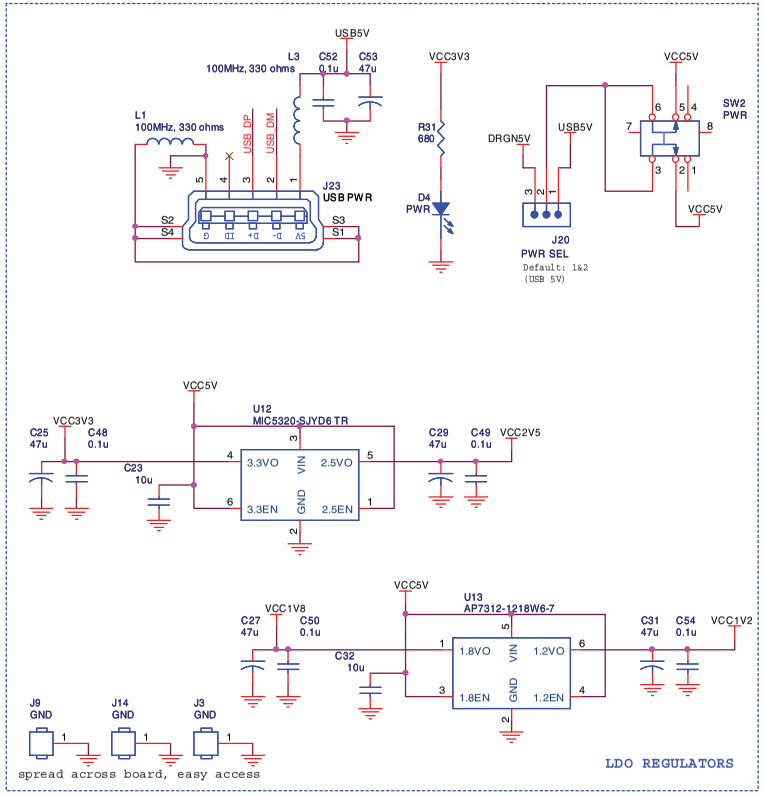


LATTICE SEMICONDUCTOR

LATTICE SEMICONDUCTOR CORPORATION CONFIDENTIAL

Manipal Dot Net

| | | |
|---|---|---|
| SENSOR FUSION DEMO BOARD (iCE40LP3K5-WLCSP25) | | |
| Title: USB Programming & Power Supplies | | |
| Size: B | Document Number: 102-374A-0913 | Rev: 2 |
| Date: Saturday, October 05, 2013 | Sheet 5 of 5 | |

Общество с ограниченной ответственностью «МосЧип» ИНН 7719860671 / КПП 771901001
Адрес: 105318, г.Москва, ул.Щербаковская д.3, офис 1107

**Данный компонент на территории Российской Федерации**

**Вы можете приобрести в компании MosChip.**

Для оперативного оформления запроса Вам необходимо перейти по данной ссылке:

http://moschip.ru/get-element

Вы можете разместить у нас заказ для любого Вашего проекта, будь то серийное производство или разработка единичного прибора.

В нашем ассортименте представлены ведущие мировые производители активных и пассивных электронных компонентов.

Нашей специализацией является поставка электронной компонентной базы двойного назначения, продукции таких производителей как XILINX, Intel (ex.ALTERA), Vicor, Microchip, Texas Instruments, Analog Devices, Mini-Circuits, Amphenol, Glenair.

Сотрудничество с глобальными дистрибьюторами электронных компонентов, предоставляет возможность заказывать и получать с международных складов практически любой перечень компонентов в оптимальные для Вас сроки.

На всех этапах разработки и производства наши партнеры могут получить квалифицированную поддержку опытных инженеров.

Система менеджмента качества компании отвечает требованиям в соответствии с ГОСТ Р ИСО 9001, ГОСТ РВ 0015-002 и ЭС РД 009

**Офис по работе с юридическими лицами:**

105318, г.Москва, ул.Щербаковская д.3, офис 1107, 1118, ДЦ «Щербаковский»

Телефон: +7 495 668-12-70 (многоканальный)

Факс: +7 495 668-12-70 (доб.304)

E-mail: info@moschip.ru

Skype отдела продаж:
moschip.ru
moschip.ru_4
moschip.ru_6
moschip.ru_9