THIS DRAWING IS UNPUBLISHED. RELEASED FOR PUBLICATION AUG ,2006.
© COPYRIGHT – BY TYCO ELECTRONICS CORPORATION. ALL RIGHTS RESERVED.

LOC	DIST
DW	—

REVISIONS

P	LTR	DESCRIPTION	DATE	DWN	APVD
	F6	REVISED (ECR-12-013183) TO IDENTIFY PCI-E SPEC GEN II & GEN III FOR EACH P/N	26JUL'12	E.L.	W.K.

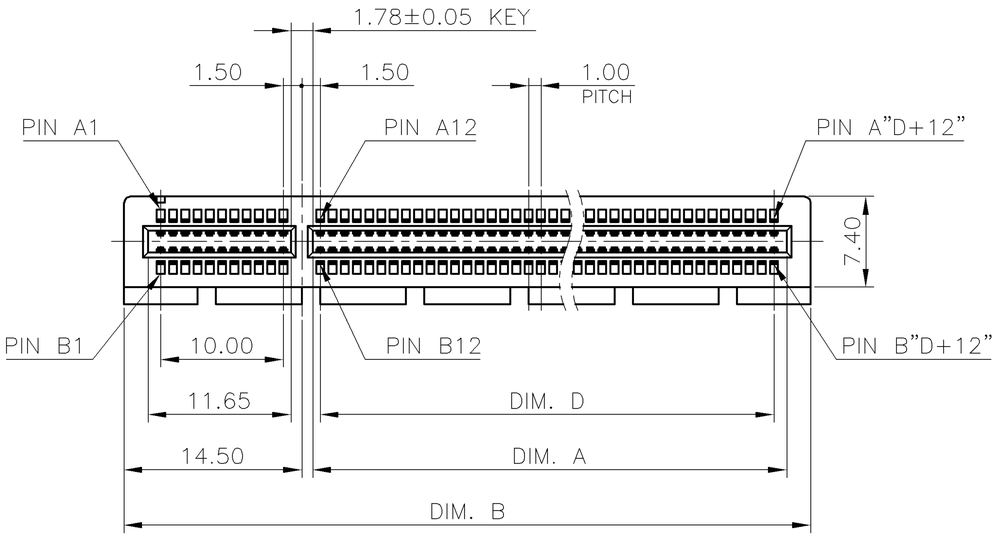

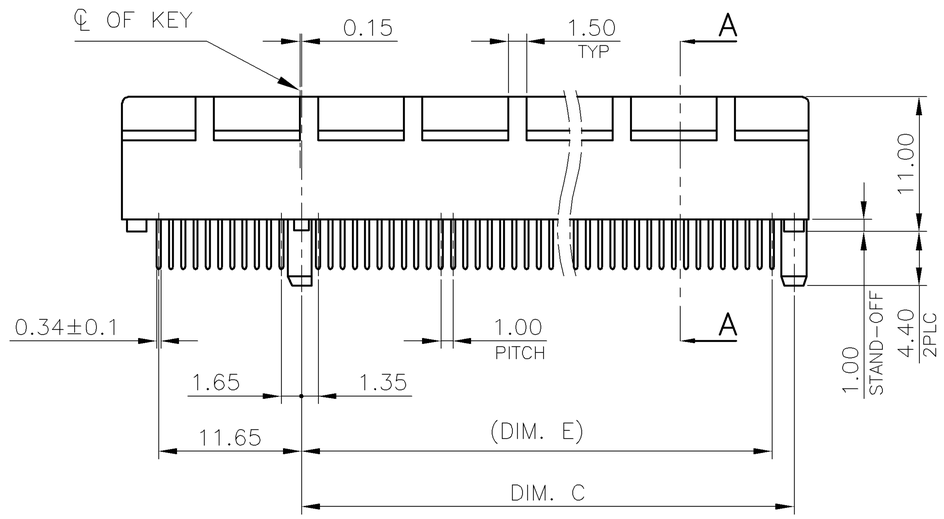

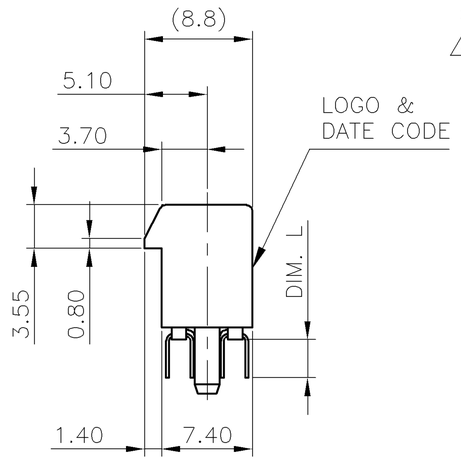

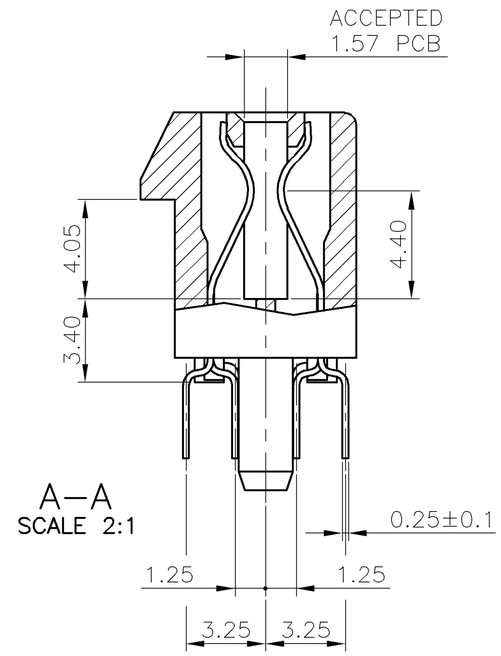

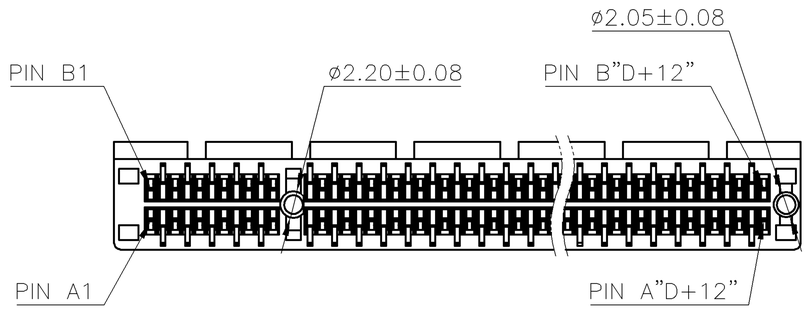

NOTES:

1. MATERIAL:
   1.1 HOUSING: 1.PA46 WITH 40% G.F, UL94 V-0, COLOR: SEE TABLE.
   2.PA9T WITH 30% GF, UL94 V-0, COLOR: SEE TABLE.
   1.2 CONTACT: PHOSPHOR BRONZE
2. FINISH:
   CONTACT: (SEE TABLE) GOLD PLATING ON CONTACT AREA.
   2.54um [100u"] MIN. MATTE-TIN PALTING ON SOLDER TAIL AREA.
   1.27um [50u"] MIN. NICKEL UNDERPLATING OVERALL.
3. CONNECTOR HAS MET THE REQUIREMENTS PER PCI EXPRESS GEN 2 TECHNICAL DOCUMENT.
4. WEIGHT:
   36 POS.: 2.55 GRAMS; 64 POS.: 3.90 GRAMS
   98 POS.: 5.50 GRAMS; 164 POS.: 8.80 GRAMS
5. WAVE SOLDER CAPABLE TO 265°C PER TEST SPEC. 109-202 CONDITION B.
6. REFLOW SOLDER CAPABLE TO 260°C PER TEST SPEC. 109-201 CONDITION B. (REFLOW SOLDERING PLEASE USE PN : 1734774-1 TO 4-1734774-8)

THIS DRAWING IS A CONTROLLED DOCUMENT.

DIMENSIONS: MM

TOLERANCES UNLESS OTHERWISE SPECIFIED:

0 PLC	± –
1 PLC	± 0.3
2 PLC	± 0.2
3 PLC	± 0.15
4 PLC	± –
ANGLES	± 3°

MATERIAL: SEE NOTE

FINISH: SEE NOTE

DWN	B. HSING	15JUL2009
CHK	S. CHIEN	15JUL2009
APVD	W. KODAMA	15JUL2009

PRODUCT SPEC: 108-57871

APPLICATION SPEC: —

WEIGHT: SEE NOTE 4

CUSTOMER DRAWING

TE Connectivity

NAME: PCI EXPRESS CARD EDGE CONNECTOR VERTICAL, DIP TYPE, 3GIO

SIZE	CAGE CODE	DRAWING NO	RESTRICTED TO
A3	00779	C-1734774	—

SCALE: — SHEET 1 OF 4 REV F6

THIS DRAWING IS UNPUBLISHED. RELEASED FOR PUBLICATION AUG ,2006.
© COPYRIGHT – BY TYCO ELECTRONICS CORPORATION. ALL RIGHTS RESERVED.

LOC	DIST
DW	–

REVISIONS

P	LTR	DESCRIPTION	DATE	DWN	APVD
		SEE SHEET 1.			

WEIGHT(g)	PCI–E COMPLIANCE	HOUSING MATERIAL	DIM. L	DIM. E	DIM. D	DIM. C	DIM. B	DIM. A	POS.	HOUSING COLOR	MIN. GOLD THICKNESS	PART NUMBER
8.7	GEN II & GEN III	6 PA9T	2.30	71.35	70	73.15	89	71.65	164	BLACK	30u"	4–1734774–8
										WHITE		4–1734774–7
5.45				38.35	37	40.15	56	38.65	98	BLACK		4–1734774–6
										WHITE		4–1734774–5
3.85				21.35	20	23.15	39	21.65	64	BLACK		4–1734774–4
										WHITE		4–1734774–3
2.55				7.35	6	9.15	25	7.65	36	BLACK		4–1734774–2
										WHITE		4–1734774–1
8.7				71.35	70	73.15	89	71.65	164	BLACK	15u"	4–1734774–0
											G/F	3–1734774–9
										WHITE	15u"	3–1734774–8
											G/F	3–1734774–7
5.45				38.35	37	40.15	56	38.65	98	BLACK	15u"	3–1734774–6
											G/F	3–1734774–5
										WHITE	15u"	3–1734774–4
											G/F	3–1734774–3
3.85				21.35	20	23.15	39	21.65	64	BLACK	15u"	3–1734774–2
											G/F	3–1734774–1
										WHITE	15u"	3–1734774–0
											G/F	2–1734774–9
2.55				7.35	6	9.15	25	7.65	36	BLACK	15u"	2–1734774–8
											G/F	2–1734774–7
										WHITE	15u"	2–1734774–6
											G/F	2–1734774–5
8.7			3.10	71.35	70	73.15	89	71.65	164	BLACK	30u"	2–1734774–4
										WHITE		2–1734774–3
5.45				38.35	37	40.15	56	38.65	98	BLACK		2–1734774–2
										WHITE		2–1734774–1
3.85				21.35	20	23.15	39	21.65	64	BLACK		2–1734774–0
										WHITE		1–1734774–9
2.55				7.35	6	9.15	25	7.65	36	BLACK		1–1734774–8
										WHITE		1–1734774–7
8.7				71.35	70	73.15	89	71.65	164	BLACK	15u"	1–1734774–6
											G/F	1–1734774–5
										WHITE	15u"	1–1734774–4
											G/F	1–1734774–3
5.45				38.35	37	40.15	56	38.65	98	BLACK	15u"	1–1734774–2
											G/F	1–1734774–1
										WHITE	15u"	1–1734774–0
											G/F	1734774–9
3.85				21.35	20	23.15	39	21.65	64	BLACK	15u"	1734774–8
											G/F	1734774–7
										WHITE	15u"	1734774–6
											G/F	1734774–5
2.55				7.35	6	9.15	25	7.65	36	BLACK	15u"	1734774–4
											G/F	1734774–3
										WHITE	15u"	1734774–2
											G/F	1734774–1

WEIGHT(g)	PCI–E COMPLIANCE	HOUSING MATERIAL	DIM. L	DIM. E	DIM. D	DIM. C	DIM. B	DIM. A	POS.	HOUSING COLOR	MIN. GOLD THICKNESS	PART NUMBER
8.8	GEN II	PA46	2.30	71.35	70	73.15	89	71.65	164	BLACK	30u"	9–1734774–7
										WHITE		9–1734774–6
5.5				38.35	37	40.15	56	38.65	98	BLACK		9–1734774–5
										WHITE		9–1734774–4
3.9				21.35	20	23.15	39	21.65	64	BLACK		9–1734774–3
										WHITE		9–1734774–2
2.55				7.35	6	9.15	25	7.65	36	BLACK		9–1734774–1
										WHITE		9–1734774–0
8.8				71.35	70	73.15	89	71.65	164	BLACK	15u"	8–1734774–9
											G/F	8–1734774–8
										WHITE	15u"	8–1734774–7
											G/F	8–1734774–6
5.5				38.35	37	40.15	56	38.65	98	BLACK	15u"	8–1734774–5
											G/F	8–1734774–4
										WHITE	15u"	8–1734774–3
											G/F	8–1734774–2
3.9				21.35	20	23.15	39	21.65	64	BLACK	15u"	8–1734774–1
											G/F	8–1734774–0
										WHITE	15u"	7–1734774–9
											G/F	7–1734774–8
2.55				7.35	6	9.15	25	7.65	36	BLACK	15u"	7–1734774–7
											G/F	7–1734774–6
										WHITE	15u"	7–1734774–5
											G/F	7–1734774–4
8.8			3.10	71.35	70	73.15	89	71.65	164	BLACK	30u"	7–1734774–3
										WHITE		7–1734774–2
5.5				38.35	37	40.15	56	38.65	98	BLACK		7–1734774–1
										WHITE		7–1734774–0
3.9				21.35	20	23.15	39	21.65	64	BLACK		6–1734774–9
										WHITE		6–1734774–8
2.55				7.35	6	9.15	25	7.65	36	BLACK		6–1734774–7
										WHITE		6–1734774–6
8.8				71.35	70	73.15	89	71.65	164	BLACK	15u"	6–1734774–5
											G/F	6–1734774–4
										WHITE	15u"	6–1734774–3
											G/F	6–1734774–2
5.5				38.35	37	40.15	56	38.65	98	BLACK	15u"	6–1734774–1
											G/F	6–1734774–0
										WHITE	15u"	5–1734774–9
											G/F	5–1734774–8
3.9				21.35	20	23.15	39	21.65	64	BLACK	15u"	5–1734774–7
											G/F	5–1734774–6
										WHITE	15u"	5–1734774–5
											G/F	5–1734774–4
2.55				7.35	6	9.15	25	7.65	36	BLACK	15u"	5–1734774–3
											G/F	5–1734774–2
										WHITE	15u"	5–1734774–1
											G/F	5–1734774–0

THIS DRAWING IS A CONTROLLED DOCUMENT.

DIMENSIONS: MM

TOLERANCES UNLESS OTHERWISE SPECIFIED:

0 PLC	± –
1 PLC	± 0.3
2 PLC	± 0.2
3 PLC	± 0.15
4 PLC	± –
ANGLES	± 3°

MATERIAL –

FINISH –

DWN –
CHK –
APVD –
PRODUCT SPEC –
APPLICATION SPEC –
WEIGHT –

TE Connectivity

NAME

PCI EXPRESS CARD EDGE CONNECTOR
VERTICAL, DIP TYPE, 3GIO

SIZE	CAGE CODE	DRAWING NO	RESTRICTED TO
A3	00779	C–1734774	–

CUSTOMER DRAWING | SCALE – | SHEET 2 OF 4 | REV F6

THIS DRAWING IS UNPUBLISHED. RELEASED FOR PUBLICATION AUG ,2006.
© COPYRIGHT – BY TYCO ELECTRONICS CORPORATION. ALL RIGHTS RESERVED.

LOC	DIST
DW	—

REVISIONS

P	LTR	DESCRIPTION	DATE	DWN	APVD
		SEE SHEET 1.			

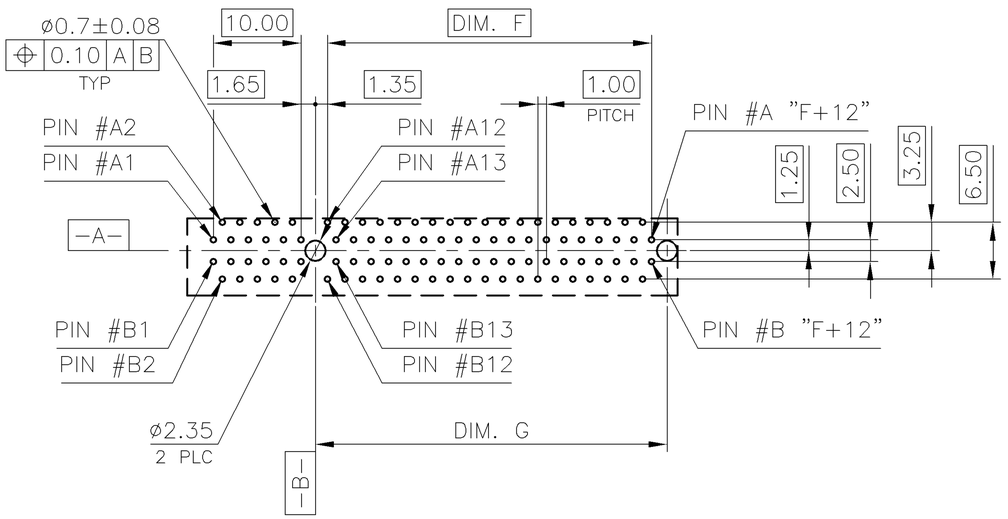

RECOMMENDED PCB LAYOUT

TOLERANCE: ±0.05
FOR DIM.L=3.1mm PCB THICKNESS: 2.4mm
FOR DIM.L=2.3mm PCB THICKNESS: 1.6mm

ADD–IN CARD EDGE–FINGER DIMENSIONS

NOTES:
CHAMFER EDGE MUST BE FREE OF CUTTING BURRS

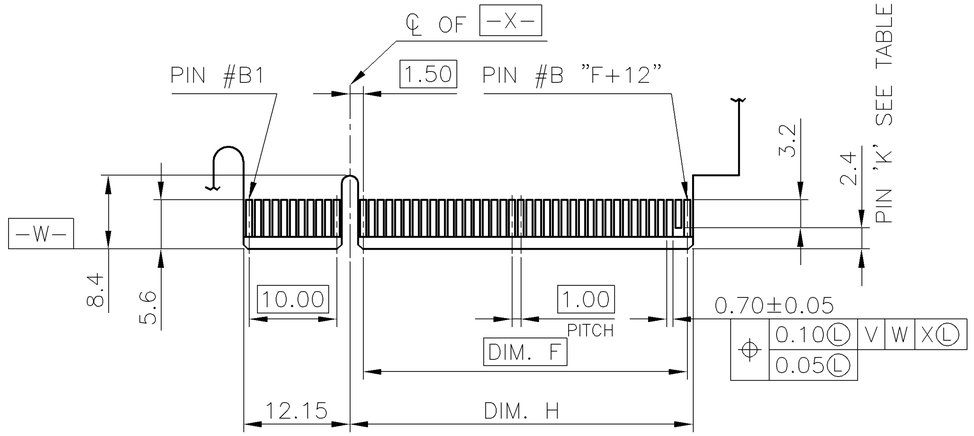

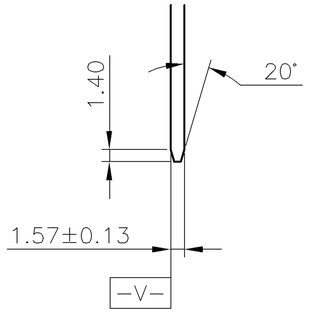

← I/O PANEL DIRECTION
PRIMARY (COMPONENT) SIDE

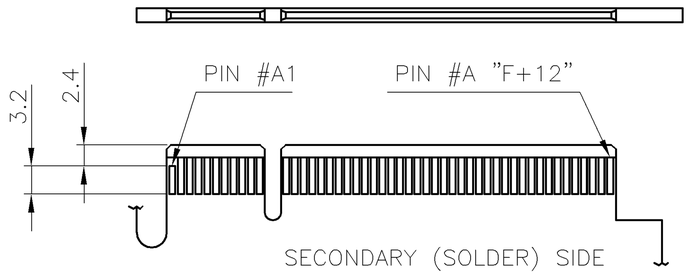

POS.	DIM. F	DIM. G	DIM. H	"K"
164	70.0	73.15	72.15	B17, B31, B48, B81
98	37.0	40.15	39.15	B17, B31, B48
64	20.0	23.15	22.15	B17, B31
36	6.0	9.15	8.15	B17

THIS DRAWING IS A CONTROLLED DOCUMENT.

DIMENSIONS: MM

TOLERANCES UNLESS OTHERWISE SPECIFIED:
0 PLC ± –
1 PLC ± –
2 PLC ± –
3 PLC ± –
4 PLC ± –
ANGLES ± –

MATERIAL –
FINISH –

DWN –
CHK –
APVD –
PRODUCT SPEC —
APPLICATION SPEC —
WEIGHT —

TE Connectivity

NAME
PCI EXPRESS CARD EDGE CONNECTOR
VERTICAL, DIP TYPE, 3GIO

SIZE	CAGE CODE	DRAWING NO	RESTRICTED TO
A3	00779	C–1734774	—

CUSTOMER DRAWING | SCALE — | SHEET 3 OF 4 | REV F6

THIS DRAWING IS UNPUBLISHED. RELEASED FOR PUBLICATION AUG ,2006.
© COPYRIGHT – BY TYCO ELECTRONICS CORPORATION. ALL RIGHTS RESERVED.

LOC	DIST
DW	—

REVISIONS

P	LTR	DESCRIPTION	DATE	DWN	APVD
		SEE SHEET 1.			

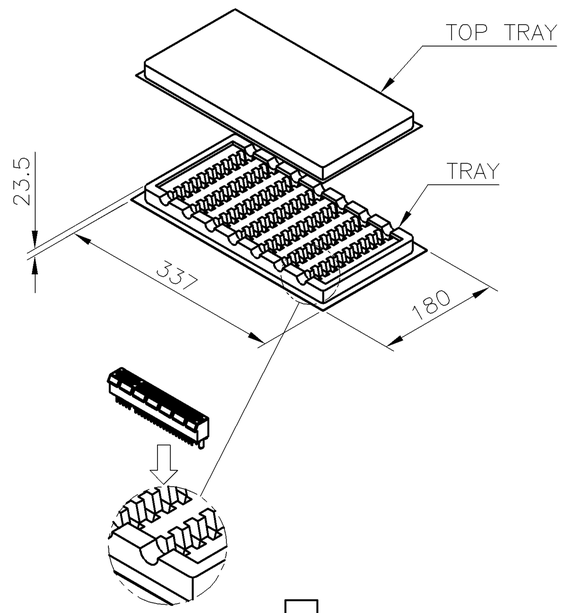

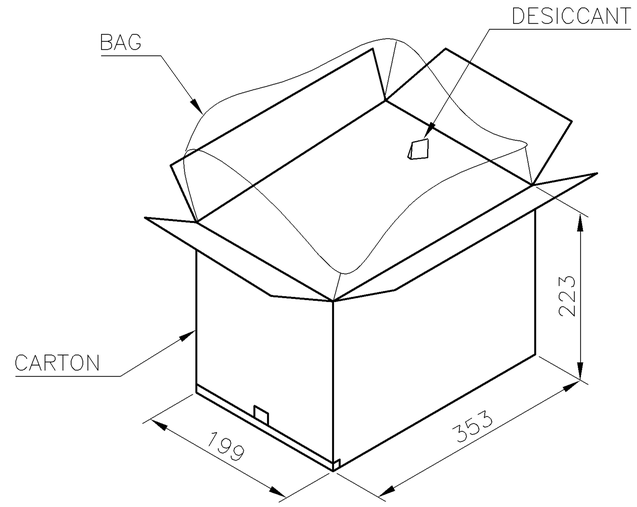

NOTES :
1. MATERIAL :
   TRAY : PVC, COLOR: TRANSPARENT.
   CARTON: CORRUGATED FIBER
   BOX: CORRUGATED FIBER
2. DIMENSION :
   TRAY: SEE DRAWING
   CARTON: SEE DRAWING
   BOX : SEE DRAWING
3. QUANTITY : SEE TABLE
4. WEIGHT : SEE TABLE

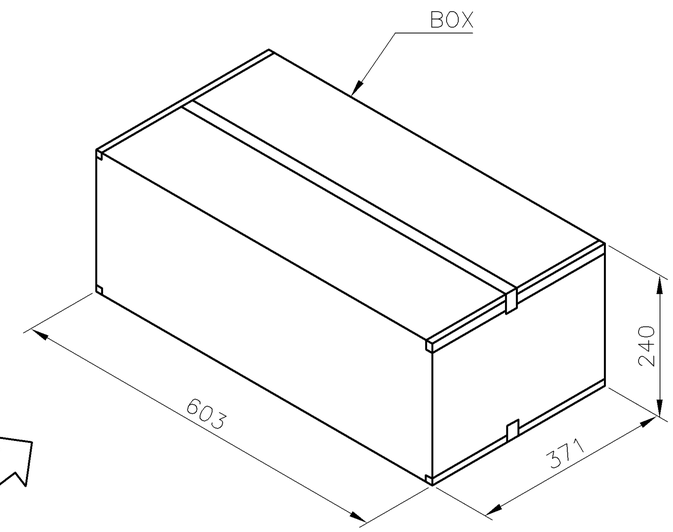

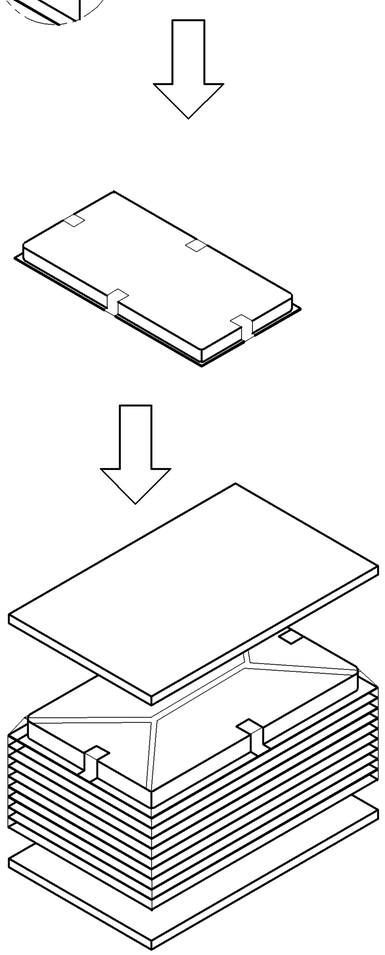

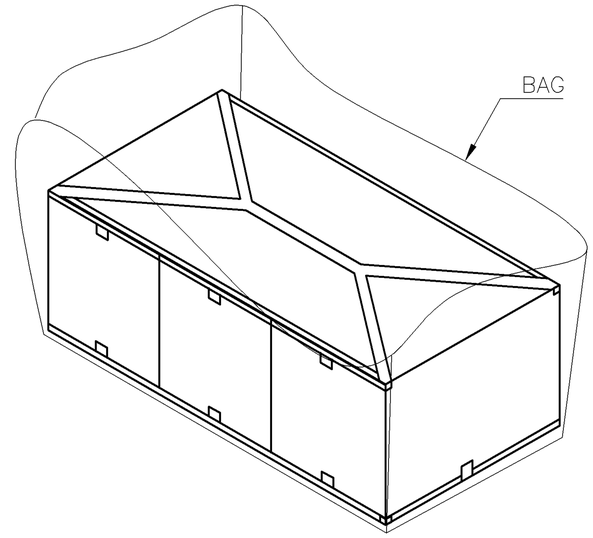

GROSS WEIGHT	NET WEIGHT	PCS/ TRAY	TRAY/ CARTON	CARTON/ BOX	PCS/ BOX	POS.
10.2 Kg	8.2 Kg	30	10	3	900	164
9.0 Kg	7.0 Kg	40	10	3	1200	98
8.5 Kg	6.5 Kg	60	10	3	1800	64
7.6 Kg	5.6 Kg	70	10	3	2100	36

THIS DRAWING IS A CONTROLLED DOCUMENT.

DIMENSIONS: MM

TOLERANCES UNLESS OTHERWISE SPECIFIED:
0 PLC ± –
1 PLC ± –
2 PLC ± –
3 PLC ± –
4 PLC ± –
ANGLES ± –

MATERIAL –
FINISH –

DWN –
CHK –
APVD –
PRODUCT SPEC –
APPLICATION SPEC –
WEIGHT –

TE Connectivity

NAME
PCI EXPRESS CARD EDGE CONNECTOR
VERTICAL, DIP TYPE, 3GIO

SIZE	CAGE CODE	DRAWING NO	RESTRICTED TO
A3	00779	C-1734774	—

CUSTOMER DRAWING | SCALE — | SHEET 4 OF 4 | REV F6

Общество с ограниченной ответственностью «МосЧип» ИНН 7719860671 / КПП 771901001
Адрес: 105318, г.Москва, ул.Щербаковская д.3, офис 1107

Данный компонент на территории Российской Федерации

Вы можете приобрести в компании MosChip.

Для оперативного оформления запроса Вам необходимо перейти по данной ссылке:

http://moschip.ru/get-element

Вы можете разместить у нас заказ для любого Вашего проекта, будь то серийное производство или разработка единичного прибора.

В нашем ассортименте представлены ведущие мировые производители активных и пассивных электронных компонентов.

Нашей специализацией является поставка электронной компонентной базы двойного назначения, продукции таких производителей как XILINX, Intel (ex.ALTERA), Vicor, Microchip, Texas Instruments, Analog Devices, Mini-Circuits, Amphenol, Glenair.

Сотрудничество с глобальными дистрибьюторами электронных компонентов, предоставляет возможность заказывать и получать с международных складов практически любой перечень компонентов в оптимальные для Вас сроки.

На всех этапах разработки и производства наши партнеры могут получить квалифицированную поддержку опытных инженеров.

Система менеджмента качества компании отвечает требованиям в соответствии с ГОСТ Р ИСО 9001, ГОСТ РВ 0015-002 и ЭС РД 009

Офис по работе с юридическими лицами:

105318, г.Москва, ул.Щербаковская д.3, офис 1107, 1118, ДЦ «Щербаковский»

Телефон: +7 495 668-12-70 (многоканальный)

Факс: +7 495 668-12-70 (доб.304)

E-mail: info@moschip.ru

Skype отдела продаж:
moschip.ru
moschip.ru_4
moschip.ru_6
moschip.ru_9