UNCONTROLLED DOCUMENT

PART NUMBER	REV.
LCM–E01602DSR	D

REV.	E.C.N. NUMBER AND REVISION COMMENTS	DATE
A	E.C.N. #10677.	11.10.00
B	E.C.N. #10707.	1.17.01
C	E.C.N. #10723.	3.19.01
D	E.C.N. #11148.	02.13.07

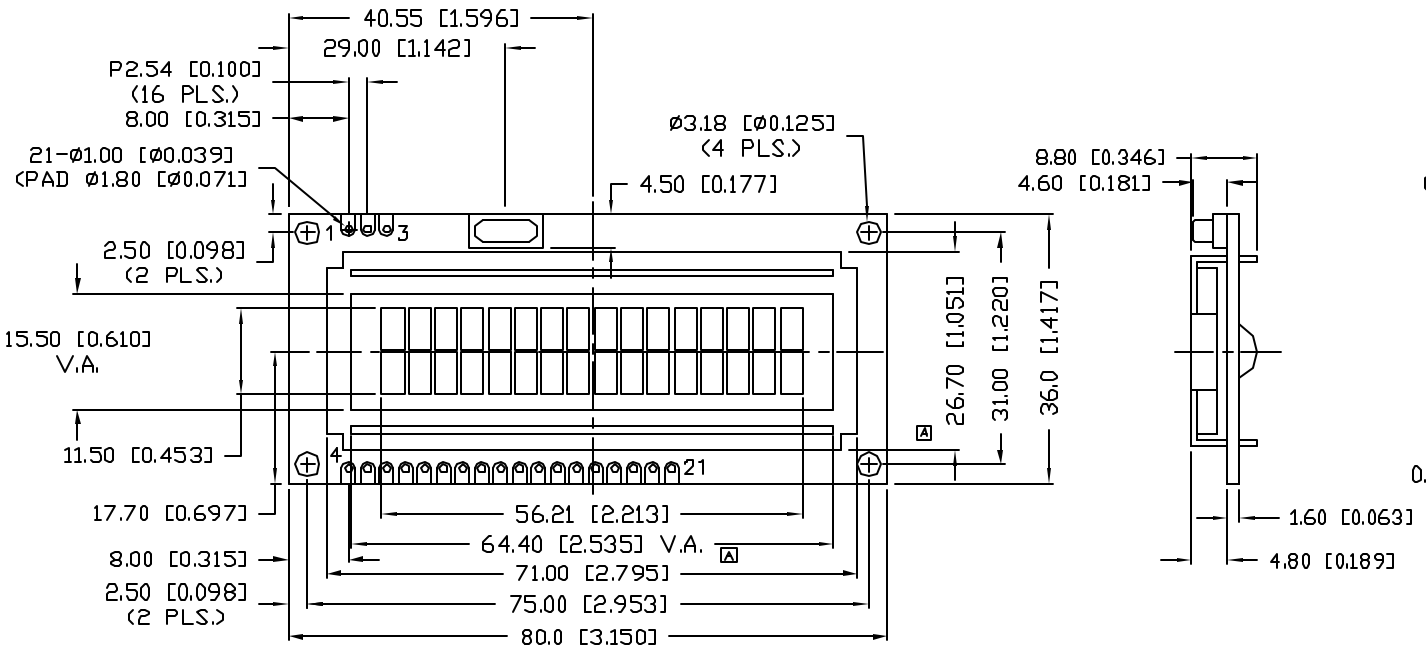

CHARACTER DETAIL

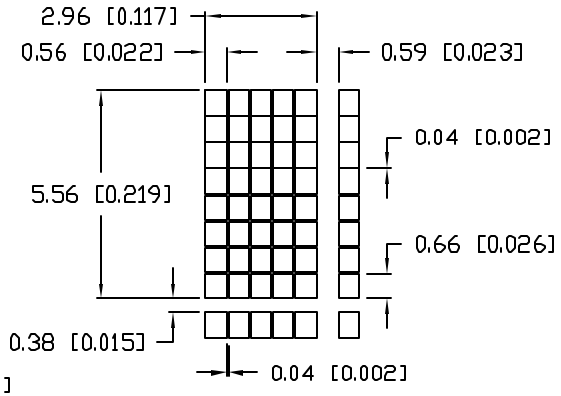

CAUTION: STATIC SENSITIVE DEVICE
FOLLOW PROPER E.S.D. HANDLING PROCEDURES
WHEN WORKING WITH THIS PART.

UNCONTROLLED DOCUMENT

*UNLESS OTHERWISE SPECIFIED TOLERANCES PER DECIMAL PRECISION ARE: X=±1 (±0.039), X.X=±0.5 (±0.020), X.XX=±0.25 (±0.010), X.XXX=±0.127 (±0.005). LEAD SIZE=±0.05 (±0.002), LEAD LENGTH=±0.75 (±0.030). MIN= +DECIMAL PRECISION −0.00 MAX.= +0.00 −DECIMAL PRECISION

REV.	PART NUMBER
D	LCM–E01602DSR

5.56 CHARACTER HEIGHT, 16 x 2 CHARACTERS, LCD MODULE, 5 x 8 DOT MATRIX, SERIAL INPUT, STN, REFLECTIVE.

CONFIDENTIAL INFORMATION
THE INFORMATION CONTAINED IN THIS DOCUMENT IS THE PROPERTY OF LUMEX INC. EXCEPT AS SPECIFICALLY AUTHORIZED IN WRITING BY LUMEX INC., THE HOLDER OF THIS DOCUMENT SHALL KEEP ALL INFORMATION CONTAINED HEREIN CONFIDENTIAL AND SHALL PROTECT SAME IN WHOLE OR IN PART FROM DISCLOSURE AND DISSEMINATION TO ALL THIRD PARTIES.

RELIABILITY NOTE
OUR MANY YEARS OF EXPERIENCE DATA ACCUMULATION INDICATE THAT SOLDER HEAT IS A MAJOR CAUSE OF EARLY AND FUTURE FAILURE. PLEASE PAY ATTENTION TO YOUR SOLDERING PROCESS.

LUMEX
290 E. HELEN ROAD
PALATINE, IL 60067–6976
PHONE: +1.847.359.2790
US WEB: www.lumex.com
TW WEB: www.lumex.com.tw

DRAWN BY:	CHECKED BY:	APPROVED BY:	DATE: 10.12.00
JC			PAGE: 1 OF 3
			SCALE: N/A

REV.	E.C.N. NUMBER AND REVISION COMMENTS	DATE
	SEE PAGE 1.	

PIN CONFIGURATION

PIN NO.	SYMBOL	I/O	FUNCTION	
1	Vss	I	POWER SUPPLY	GND (0V)
2	VDD	I		3.3V
3	RXD	I		SERIAL DATA
4~11	P1.0~1.7	I/O	8-BIT BIDIRECTIONAL I/O PORT	
12~17	P3.1~3.5,3.7	I/O	BIDIRECTIONAL I/O PORT WITH INTERNAL PULLUP	
18	XTAL1	I	INPUT TO INVERTING OSCILLATOR AMPLIFIER & INTERNAL CLOCK OPERATING CIRCUIT	
19	RST	I	RESET FOR AT89C2051	
20	Vss	I	GND (0V)	
21	Vcc	I	SUPPLY VOLTAGE FOR AT89C2051	

BLOCK DIAGRAM

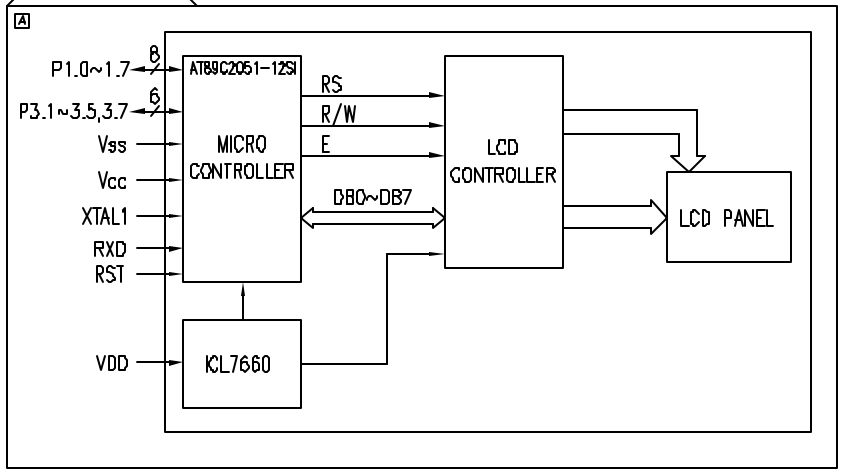

ELECTRICAL CHARACTERISTICS

ITEM	SYMBOL	CONDITION	STANDARD VALUE			UNIT
			MIN.	TYP.	MAX.	
SUPPLY VOLTAGE	Vcc	–	2.7	–	6.0	V
SUPPLY CURRENT	Icc	ACTIVE MODE 12MHz, Vcc=3V	–	–	5.5	mA
SUPPLY VOLTAGE FOR LCD DRIVE	Vo	Ta=25°C	–	0.8	–	V

ABSOLUTE MAXIMUM RATINGS

ITEM	SYMBOL	STANDARD VALUE		UNIT
		MIN	MAX	
SUPPLY VOLTAGE	Vcc	–	6.6	V
VOLTAGE ON ANY PIN W/RESPECT TO GND	–	-1.0	+7.0	V
DC OUTPUT CURRENT	Iout	Icc	25.0	mA
OPERATING TEMPERATURE	Topr	-20	70	°C
STORAGE TEMPERATURE	Tstg	-30	85	°C

NOTES:

1. 10K~20K POTENTIOMETER ON PCB TO ADJUST CONTRAST.

*UNLESS OTHERWISE SPECIFIED TOLERANCES PER DECIMAL PRECISION ARE: X=±1 (±0.039), X.X=±0.5 (±0.020), X.XX=±0.25 (±0.010), X.XXX=±0.127 (±0.005). LEAD SIZE=±0.05 (±0.002), LEAD LENGTH=±0.75 (±0.030). MIN= +DECIMAL PRECISION -0.00 MAX.= +0.00 -DECIMAL PRECISION

5.56 CHARACTER HEIGHT, 16 x 2 CHARACTERS, LCD MODULE, 5 x 8 DOT MATRIX, SERIAL INPUT, STN, REFLECTIVE.

CONFIDENTIAL INFORMATION
THE INFORMATION CONTAINED IN THIS DOCUMENT IS THE PROPERTY OF LUMEX INC. EXCEPT AS SPECIFICALLY AUTHORIZED IN WRITING BY LUMEX INC., THE HOLDER OF THIS DOCUMENT SHALL KEEP ALL INFORMATION CONTAINED HEREIN CONFIDENTIAL AND SHALL PROTECT SAME IN WHOLE OR IN PART FROM DISCLOSURE AND DISSEMINATION TO ALL THIRD PARTIES.

RELIABILITY NOTE
OUR MANY YEARS OF EXPERIENCE DATA ACCUMULATION INDICATE THAT SOLDER HEAT IS A MAJOR CAUSE OF EARLY AND FUTURE FAILURE. PLEASE PAY ATTENTION TO YOUR SOLDERING PROCESS.

LUMEX
290 E. HELEN ROAD
PALATINE, IL 60067-6976
PHONE: +1.847.359.2790
US WEB: www.lumex.com
TW WEB: www.lumex.com.tw

DRAWN BY:	CHECKED BY:	APPROVED BY:	DATE: 10.12.00
JC			PAGE: 2 OF 3
			SCALE: N/A

UNCONTROLLED DOCUMENT

PART NUMBER	REV.
LCM-E01602DSR	D

REV.	E.C.N. NUMBER AND REVISION COMMENTS	DATE
	SEE PAGE 1.	

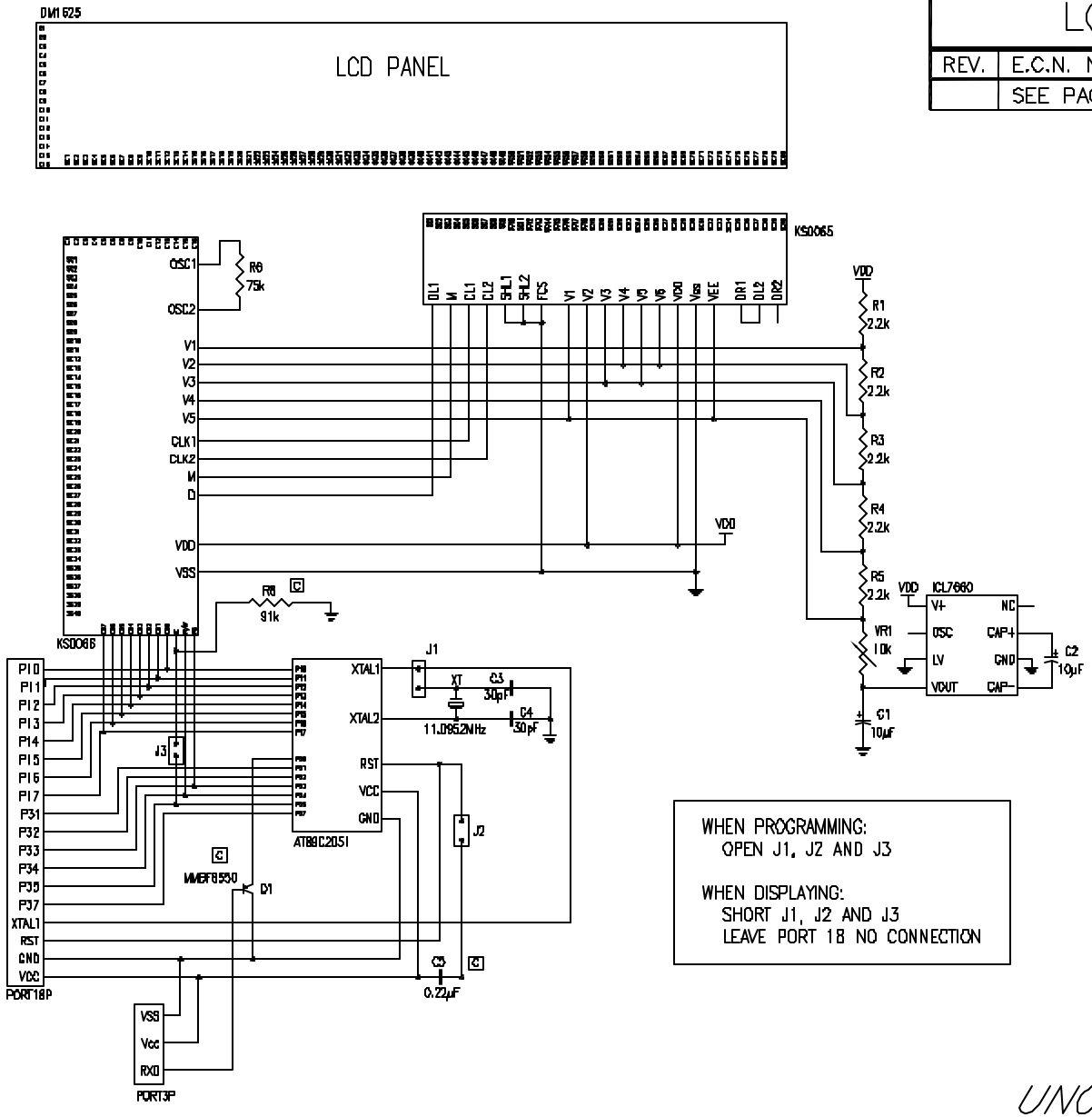

WHEN PROGRAMMING:
OPEN J1, J2 AND J3

WHEN DISPLAYING:
SHORT J1, J2 AND J3
LEAVE PORT 18 NO CONNECTION

UNCONTROLLED DOCUMENT

REV.	PART NUMBER
D	LCM-E01602DSR

5.56 CHARACTER HEIGHT, 16 x 2 CHARACTERS, LCD MODULE, 5 x 8 DOT MATRIX, SERIAL INPUT, STN, REFLECTIVE.

CONFIDENTIAL INFORMATION
THE INFORMATION CONTAINED IN THIS DOCUMENT IS THE PROPERTY OF LUMEX INC. EXCEPT AS SPECIFICALLY AUTHORIZED IN WRITING BY LUMEX INC., THE HOLDER OF THIS DOCUMENT SHALL KEEP ALL INFORMATION CONTAINED HEREIN CONFIDENTIAL AND SHALL PROTECT SAME IN WHOLE OR IN PART FROM DISCLOSURE AND DISSEMINATION TO ALL THIRD PARTIES.

RELIABILITY NOTE
OUR MANY YEARS OF EXPERIENCE DATA ACCUMULATION INDICATE THAT SOLDER HEAT IS A MAJOR CAUSE OF EARLY AND FUTURE FAILURE. PLEASE PAY ATTENTION TO YOUR SOLDERING PROCESS.

LUMEX
290 E. HELEN ROAD
PALATINE, IL 60067-6976
PHONE: +1.847.359.2790
US WEB: www.lumex.com
TW WEB: www.lumex.com.tw

DRAWN BY:	CHECKED BY:	APPROVED BY:	DATE: 10.12.00
JC			PAGE: 3 OF 3
			SCALE: N/A

Общество с ограниченной ответственностью «МосЧип» ИНН 7719860671 / КПП 771901001
Адрес: 105318, г.Москва, ул.Щербаковская д.3, офис 1107

Данный компонент на территории Российской Федерации

Вы можете приобрести в компании MosChip.

Для оперативного оформления запроса Вам необходимо перейти по данной ссылке:

http://moschip.ru/get-element

Вы можете разместить у нас заказ для любого Вашего проекта, будь то серийное производство или разработка единичного прибора.

В нашем ассортименте представлены ведущие мировые производители активных и пассивных электронных компонентов.

Нашей специализацией является поставка электронной компонентной базы двойного назначения, продукции таких производителей как XILINX, Intel (ex.ALTERA), Vicor, Microchip, Texas Instruments, Analog Devices, Mini-Circuits, Amphenol, Glenair.

Сотрудничество с глобальными дистрибьюторами электронных компонентов, предоставляет возможность заказывать и получать с международных складов практически любой перечень компонентов в оптимальные для Вас сроки.

На всех этапах разработки и производства наши партнеры могут получить квалифицированную поддержку опытных инженеров.

Система менеджмента качества компании отвечает требованиям в соответствии с ГОСТ Р ИСО 9001, ГОСТ РВ 0015-002 и ЭС РД 009

Офис по работе с юридическими лицами:

105318, г.Москва, ул.Щербаковская д.3, офис 1107, 1118, ДЦ «Щербаковский»

Телефон: +7 495 668-12-70 (многоканальный)

Факс: +7 495 668-12-70 (доб.304)

E-mail: info@moschip.ru

Skype отдела продаж:
moschip.ru
moschip.ru_4
moschip.ru_6
moschip.ru_9