First Edition
Sep 8, 2005

LCD Module Technical Specification

Final Revision
******

Type No. **F-51553GNBJ-LW-AEN**

Approved by (Quality Assurance Division)

Checked by (ACI Engineering Division)

Prepared by (ACI Engineering Division)

Table of Contents

1. General Specifications 2
2. Electrical Specifications 3
3. Optical Specifications 12
4. I/O Terminal 14
5. Test 17
6. Appearance Standards 18
7. Code System of Production Lot 22
8. Type Number 22
9. Applying Precautions 22
10. Precautions Relating Product Handling 23
11. Warranty 24

Revision History

Rev.	Date	Page	Comment

1.General Specifications

Operating Temp.	:	min. -20°C ~max. 70°C
Storage Temp.	:	min. -30°C ~max. 85°C
Dot Pixels	:	128 (W) × 64 (H) dots
Dot Size	:	0.48 (W) × 0.48 (H) mm
Dot Pitch	:	0.50 (W) × 0.50 (H) mm
Viewing Area	:	66.8 (W) × 35.5 (H) mm
Outline Dimensions	:	89.7 (W) × 49.8* (H) × 6.0 (D) mm * Without FPCUV
Weight	:	33.0g max.
LCD Type	:	NTD-21558 (STN / Blue-mode / Transmissive)
Viewing Angle	:	6:00
Data Transfer	:	8-bit parallel data transfer Serial data transfer
Backlight	:	LED Backlight / White
Drawings	:	Dimensional Outline UE-311234B
RoHS regulation	:	To our best knowledge, this product satisfies material requirement of RoHS regulation. Our company is doing the best efforts to obtain the equivalent certificate from our suppliers.

2.Electrical Specifications

2.1.Absolute Maximum Ratings

GND=0V

Parameter	Symbol	Conditions	Min.	Max.	Units
Supply Voltage (Logic)	V_{DD}-GND	-	-0.3	7.0	V
Supply Voltage (Booster Circuit)	V_{DD}-GND	-	-6.0	+0.3	V
Supply Voltage 1 (LCD Drive)	V_5,V_{OUT}	-	-18.0	+0.3	V
Input Voltage	V_{IN}	-	-0.3	V_{DD}+0.3	V

2.2.DC Characteristics

Ta=25°C, GND=0V

Parameter	Symbol	Conditions	Min.	Typ.	Max.	Units
Supply Voltage (Logic)	V_{DD}-GND	With Triple	4.5	-	5.5	V
		With Quad	2.7	-	3.3	
Supply Voltage (LCD Drive)	V_{DD}-V_5	Shown in 3.1				V
"High" Level Input Voltage	V_{IH}	-	0.8×V_{DD}	-	V_{DD}	V
"Low" Level Input Voltage	V_{IL}	-	GND	-	0.2×V_{DD}	V
"High" Level Output Voltage	V_{OH}	I_{OH}=-0.1mA	0.8×V_{DD}	-	V_{DD}	V
"Low" Level Output Voltage	V_{OL}	I_{OL}=0.1mA	GND	-	0.2×V_{DD}	V
Supply Current	I_{DD}	V_{DD}-GND=5.0V	-	0.84	1.26	mA

2.3. AC Characteristics

2.3.1. Read/Write Operation Sequence (80 series CPU)

V_{DD}=5.0V±10%

Parameter		Symbol	Min.	Max.	Units
Address Setup Time		t_{AW8}	0	-	ns
Address Hold Time		t_{AH8}	0	-	ns
System Cycle Time		t_{CYC8}	166	-	ns
Control Low Pulse Width	WRITE	t_{CCLW}	30	-	ns
	READ	t_{CCLR}	70	-	ns
Control High Pulse Width	WRITE	t_{CCHW}	30	-	ns
	READ	t_{CCHR}	30	-	ns
Data Setup Time		t_{DS8}	30	-	ns
Data Hold Time		t_{DH8}	10	-	ns
$\overline{RD}$ Access Time		t_{ACC8}	-	70	ns
Output Disable Time		t_{OH8}	5	50	ns

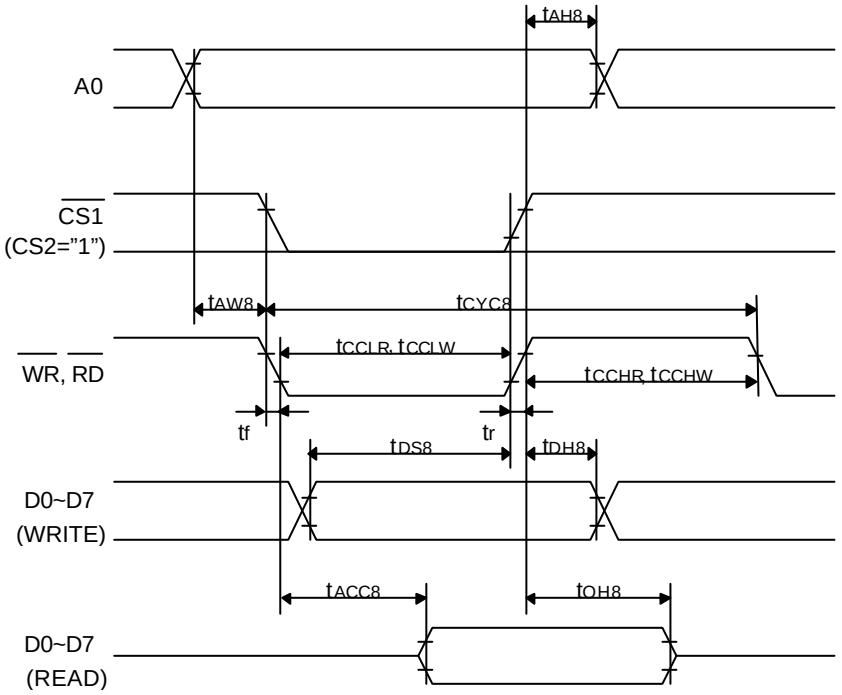

2.3.2. Read/Write Operation Sequence (68 series CPU)

V_{DD}=5.0V±10%

Parameter		Symbol	Min.	Max.	Units
Address Setup Time		t_{AH6}	0	-	ns
Address Hold Time		t_{AW6}	0	-	ns
System Cycle Time		t_{CYC6}	166	-	ns
Data Setup Time		t_{DS6}	30	-	ns
Data Hold Time		t_{DH6}	10	-	ns
Access Time (CL=100pF)		t_{ACC6}	-	70	ns
Output Disable Time		t_{OH6}	10	50	ns
Enable High Pulse Width	READ	t_{EWHR}	70	-	ns
	WRITE	t_{EWHW}	30	-	ns
Enable Low Pulse Width	READ	t_{EWLR}	30	-	ns
	WRITE	t_{EWLW}	30	-	ns

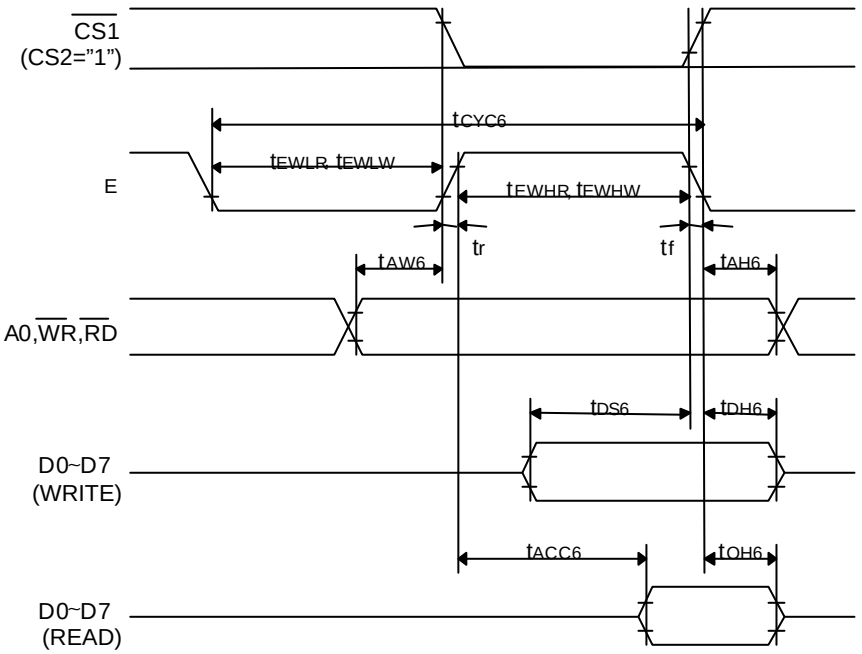

2.3.3. Serial Interface Sequence

V_{DD}=5.0±10%

Parameter	Symbol	Min.	Max.	Units
Serial Clock Cycle Time	t_{SCYC}	200	-	ns
Serial Clock High Pulse Width	t_{SHW}	75	-	ns
Serial Clock Low Pulse Width	t_{SLW}	75	-	ns
Address Setup Time	t_{SAS}	50	-	ns
Address Hold Time	t_{SAH}	100	-	ns
Data Setup Time	t_{SDS}	50	-	ns
Data Hold Time	t_{SDH}	50	-	ns
Chip Select Setup Time	t_{CSS}	100	-	ns
Chip Select Hold Time	t_{CSH}	100	-	ns

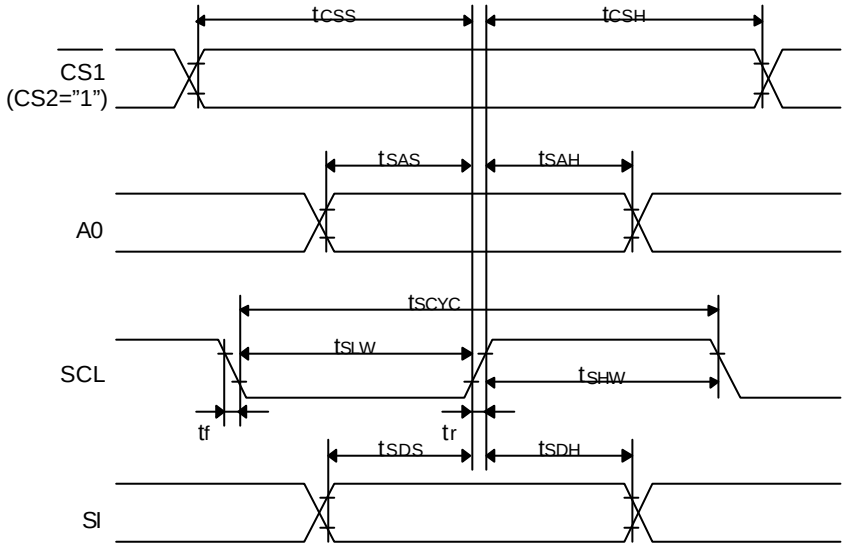

2.3.4. Display Control Timing Characteristics

Reset Input Timing V_{DD}=5.0±10%

Parameter	Symbol	Min.	Typ.	Max.	Units
Reset time	t_R	-	-	0.5	µs
Reset "L" Pulse Width	t_{RW}	0.5	-	-	

Output Timing V_{DD}=5.0±10%

Parameter	Symbol	Min.	Typ.	Max.	Units
FR Delay Time	t_{DFR}	-	10	40	ns

Note 1 :Valid only when the master mode is selected.
Note 2:All timing is based on 20% and 80% of Vss.

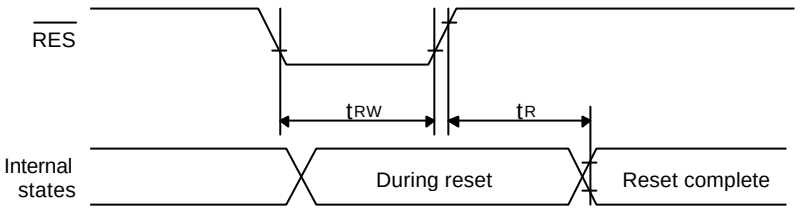

Instruction Setup: Reference (reference)

(1) Initialization

Note: With this IC, when the power is applied, LCD driving non-selective potentials V_2 and V_3 (SEG pin) and V_1 and V_4 (COM pin) are output through the LCD driving output pins SEG and COM. When electric charge is remaining in the smoothing capacitor connecting between the LCD driving voltage output pins (V_1 ~ V_5) and the V_{DD} pin, the picture on the display may become totally dark instantaneously when the power is turned on. To avoid occurrence of such a failure, we recommend the following flow when turning on the power.

① When the built-in power is being used immediately after turning on the power:

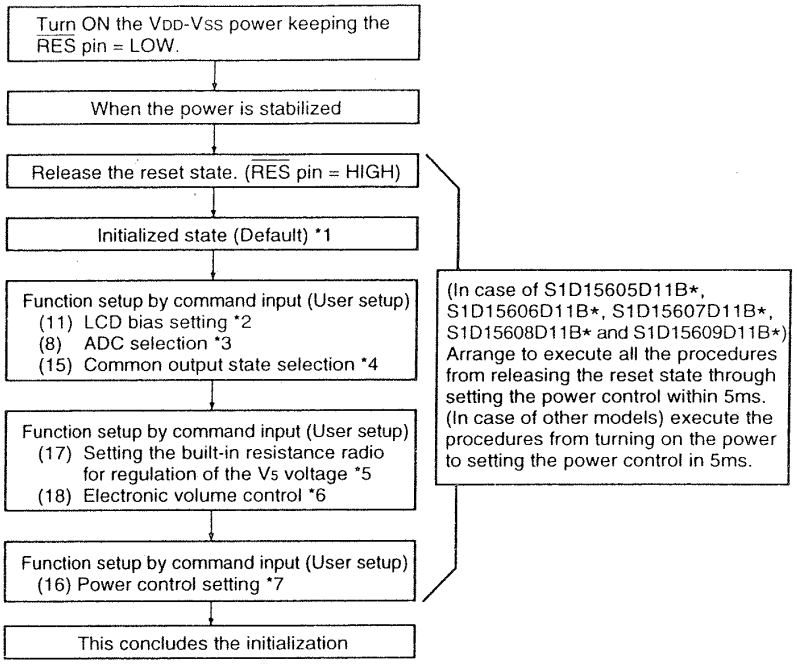

② When the built-in power is not being used immediately after turning on the power:

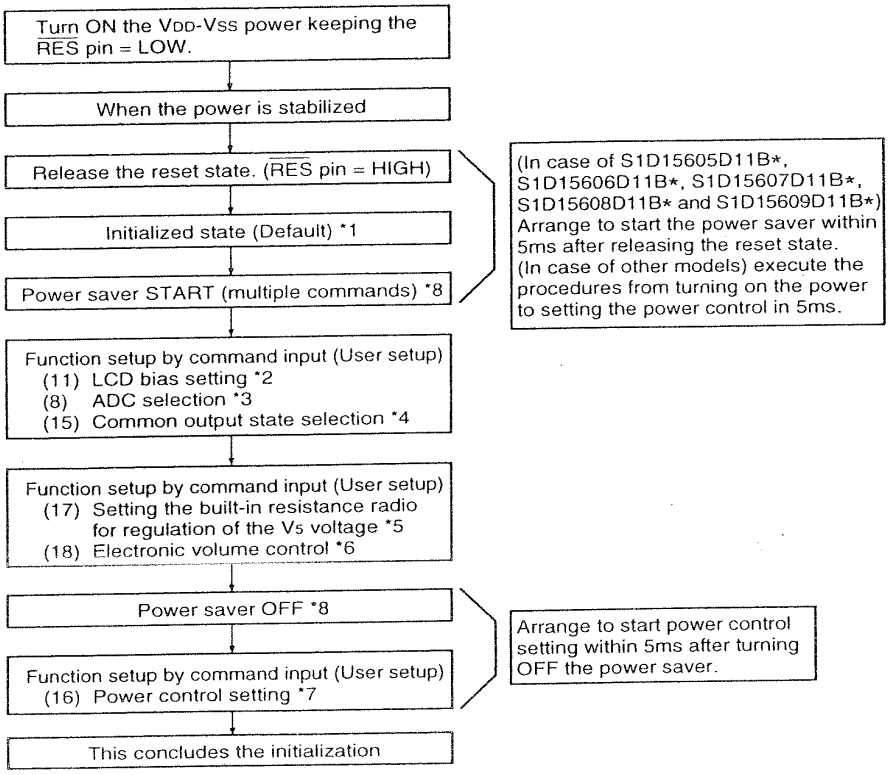

* The target time of 5ms will result to vary depending on the panel characteristics and the capacitance of the smoothing capacitor. Therefore, we suggest you to conduct an operation check using the actual equipment.

Notes: Refer to respective sections or paragraphs listed below.

*1: 6. Description of functions; "Resetting circuit" (The contents of DDRAM can be variable even in the initial setting (Default) at the reset state.)
*2: 7. Command description; "(11) LCD bias setting"
*3: 7. Command description; "(8) ADC selection"
*4: 7. Command description; "(15) Common output state selection"
*5: 6. Description of functions; "Power circuit" & "(17) Command description; Setting the built-in resistance radio for regulation of the V_5 voltage"
*6: 6. Description of functions; "Power circuit" & "(18) Command description; Electronic volume control"
*7: 6. Description of functions; "Power circuit" & "(16) Command description; Power control setting"
*8: 7. The power saver ON state can either be in sleep state or stand-by state. Command description; "Power saver START (multiple commands)"

(2) Data Display

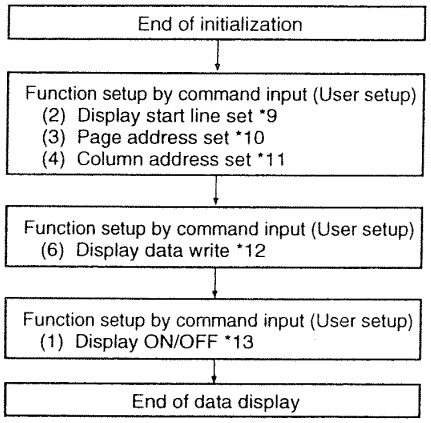

Notes: Reference items

*9: Command Description; Display start line set
*10: Command Description; Page address set
*11: Command Description; Column address set
*12: Command Description; Display data write
*13: Command Description; Display ON/OFF Avoid displaying all the data at the data display start (when the display is ON) in white.

(3) Power OFF *14

- In case of S1D15605D11B*, S1D15606D11B*, S1D15607D11B*, S1D15608D11B* and S1D15609D11B*,

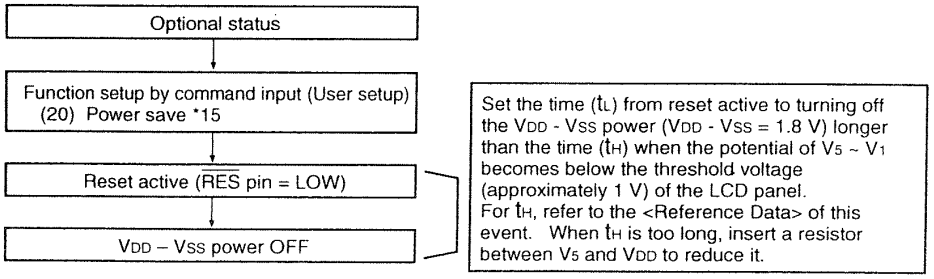

- In case of other models,

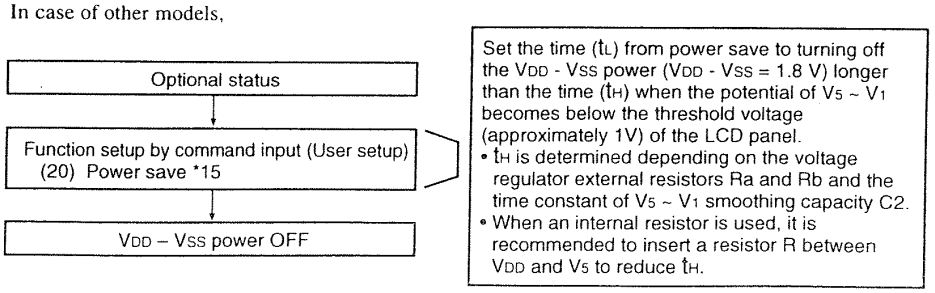

Notes: Reference items

*14: The logic circuit of this IC's power supply V_{DD} - V_{SS} controls the driver of the LCD power supply V_{DD} - V_5. So, if the power supply V_{DD} - V_{SS} is cut off when the LCD power supply V_{DD} - V_5 has still any residual voltage, the driver (COM. SEG) may output any uncontrolled voltage. When turning off the power, observe the following basic procedures:
  - After turning off the internal power supply, make sure that the potential V_5 ~ V_1 has become below the threshold voltage of the LCD panel, and then turn off this IC's power supply (V_{DD} - V_{SS}). 6. Description of Function, 6.7 Power Circuit
*15: After inputting the power save command, be sure to reset the function using the $\overline{RES}$ terminal until the power supply V_{DD} - V_{SS} is turned off. 7. Command Description (20) Power Save
*16: After inputting the power save command, do not reset the function using the $\overline{RES}$ terminal until the power supply V_{DD} - V_{SS} is turned off. 7. Command Description (20) Power Save

(4) Refresh

It is recommended that the operating modes and display contents be refreshed periodically to prevent the effect of unexpected noise.

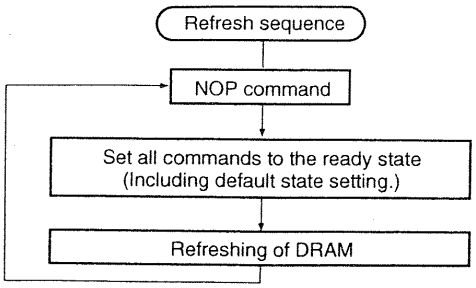

2.4. Lighting Specifications

2.4.1. Absolute Maximum Ratings

Ta=25°C (1Unit)

Parameter	Symbol	Conditions	Min.	Typ.	Max.	Units
Foward Current	I_F	Note 1	-	-	75	mA
Reverse Voltage	V_R	-	-	-	8	V
LED Power Dissipation	P_D	-	-	-	0.375	W

Note 1 : Refer to the foward current derating curve.

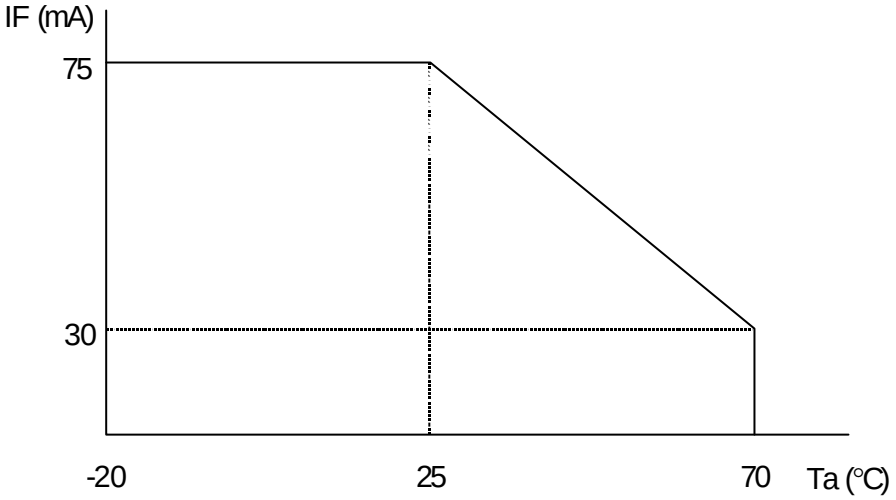

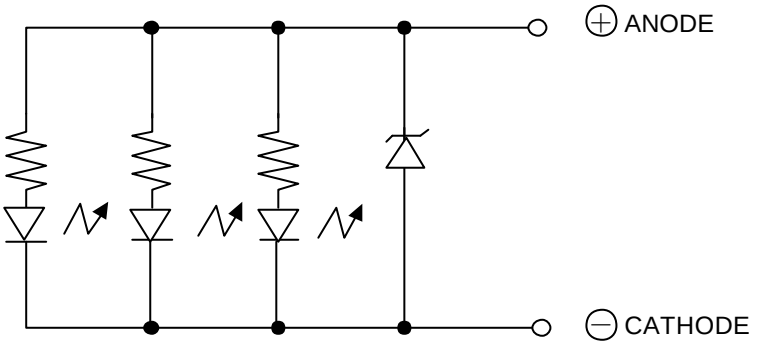

2.4.2. Operating Characteristics

Ta=25°C

Parameter	Symbol	Conditions	Min.	Typ.	Max.	Units
Foward Voltage	V_F	I_F=40mA	-	5.0	-	V
Luminance of Backlight Surface	L	I_F=40mA	65	100	-	cd/m^2

3.Optical Specifications

3.1. LCD Driving Voltage

Parameter	Symbol	Conditions	Min.	Typ.	Max.	Units
Recommended	V_{DD}-V5	Ta= -20°C	-	-	9.1	V
LCD Driving Voltage		Ta=25°C	7.8	8.5	9.1	V
Note 1		Ta=70°C	7.4	-	-	V

Note 1 : Voltage (Applied actual waveform to LCD Module) for the best contrast. The range of minimum and maximum shows tolerance of the operating voltage. The specified contrast ratio and response time are not guaranteed over the entire range.

3.2. Optical Characteristics

Ta=25°C, 1/65 Duty, 1/7 Bias, V_{OD}=8.5V (Note 4), θ= 0°, ϕ= - °

Parameter		Symbol	Conditions	Min.	Typ.	Max.	Units
Contrast Ratio Note 1		CR	θ= 0°, ϕ= - °	-	8	-	
Viewing Angle			Shown in 3.3				
Response	Rise Note 2	T_{ON}	-	-	160	240	ms
Time	Decay Note 3	T_{OFF}	-	-	190	290	ms

Note 1 :Contrast ratio is definded as follows. (CR = L_{ON} / L_{OFF})

L_{ON} : Luminance of the ON segments

L_{OFF}: Luminance of the OFF segments

Mesuring Spot : 3mmϕ

Note 2 :The time that the luminance level reaches 90% of the saturation level from 0% when ON signal is applied.

Note 3 :The time that the luminance level reaches 10% of the saturation level from 100% when OFF signal is applied.

Note 4 :Definition of Driving Voltage V_{OD}

$V_{OD}=V_{CC}-V_{ADJ}-V_{BE}$

Assuming that the typical driving waveforms shown below are applied to the LCD Panel at 1/A Duty - 1/B Bias (A: Duty Number, B: Bias Number). Driving voltage V_{OD} is definded as the voltage V_{O-P} when the contrast ratio (CR=L_{ON} / L_{OFF}) is at its maximum.

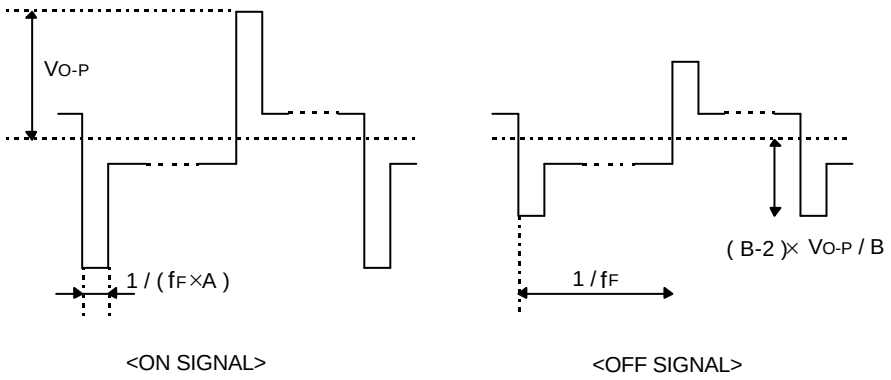

3.3. Definition of Viewing Angle and Optimum Viewing Area

*Point • shows the point where contrast ratio is measured. : θ= 0°, ϕ= -°
*Driving condition: 1/65 Duty, 1/7 Bias, V_{OD}=8.5V, f_F=84.6Hz

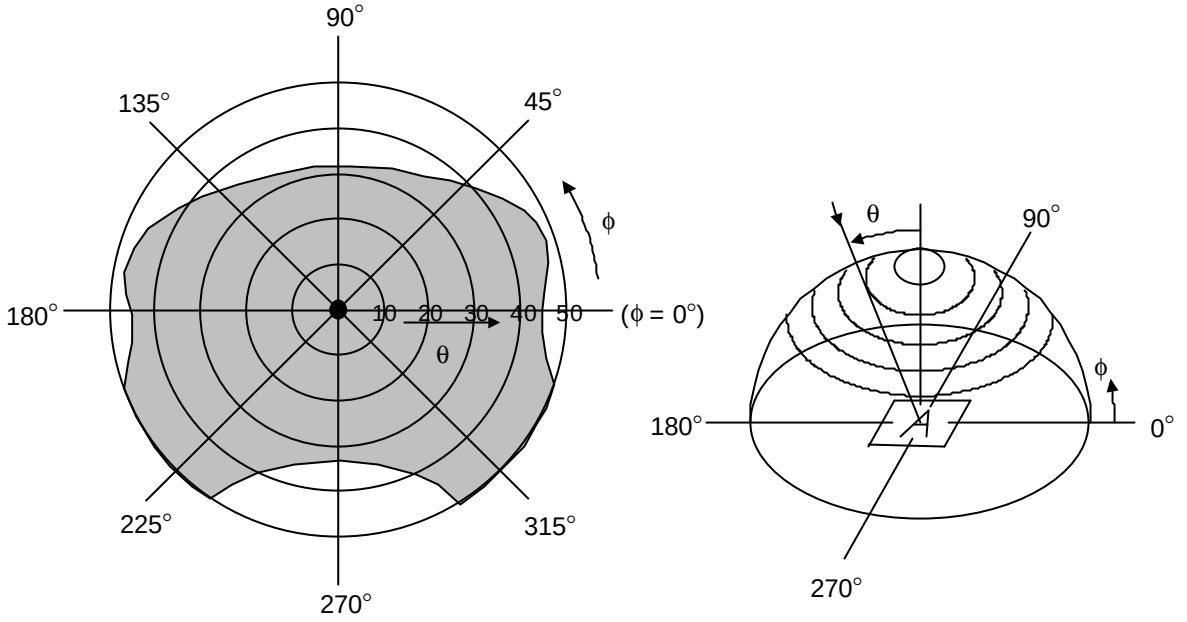

*Area shows typ. CR≥3 (Mesuring Spot : 3mmϕ)

3.4. System Block Diagram

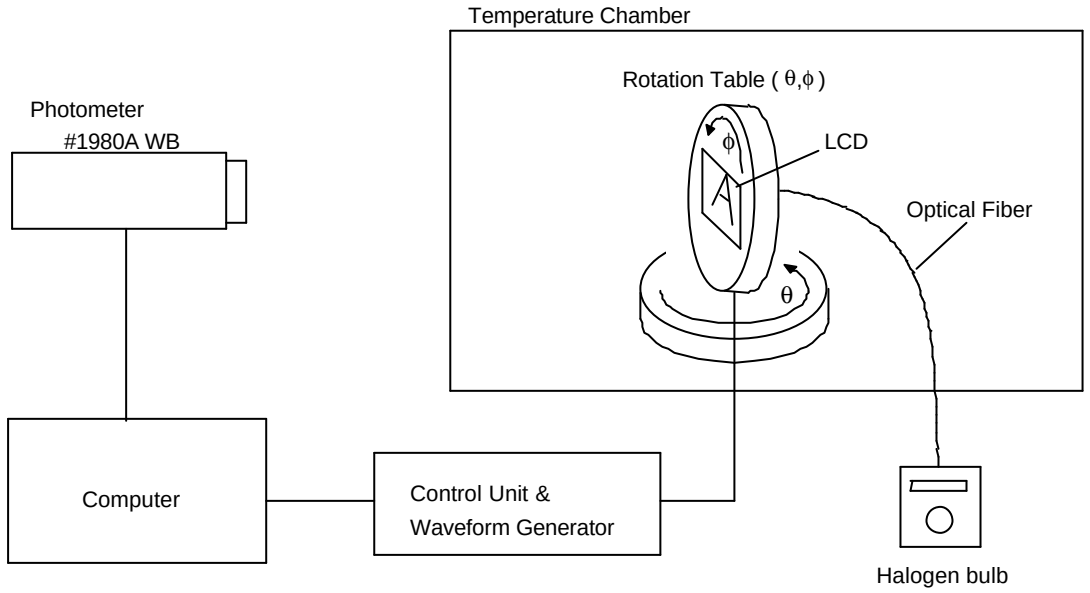

4.I/O Terminal

4.1. Pin Assignment

CN1

No.	Symbol	Function
1	$\overline{CS1}$	Chip Select Signal L : Active
2	$\overline{RES}$	Reset Signal L : Reset
3	A0	H : D0~D7 are Display Data L : D0~D7 are Instructions
4	$\overline{WR}$	Write Signal L : Active
5	$\overline{RD}$	Read Signal L : Active
6	D0	Data Bus Line
7	D1	Data Bus Line
8	D2	Data Bus Line
9	D3	Data Bus Line
10	D4	Data Bus Line
11	D5	Data Bus Line
12	D6	Data Bus Line
13	D7	Data Bus Line
14	V_{DD}	Power Supply for Logic
15	GND	Power Supply (0V, GND)
16	V_{OUT}	DC/DC Voltage Converter Output
17	CAP3-	DC/DC Voltage Converter Negative Connection
18	CAP1+	DC/DC Voltage Converter Positive Connection
19	CAP1-	DC/DC Voltage Converter Negative Connection
20	CAP2-	DC/DC Voltage Converter Negative Connection
21	CAP2+	DC/DC Voltage Converter Positive Connection
22	V_1	Power Supply for LCD Drive $V_1 = 1/7, V_5$
23	V_2	Power Supply for LCD Drive $V_2 = 2/7, V_5$
24	V_3	Power Supply for LCD Drive $V_3 = 5/7, V_5$
25	V_4	Power Supply for LCD Drive $V_4 = 6/7, V_5$
26	V_5	Power Supply for LCD Drive V_5, V_{OUT}
27	VR	Voltage Adjustment Pin
28	C86	Interface Mode Select Signal H : 68 series L : 80 series
29	P/S	Parallel / Serial Data Select Signal H: Parallel L: Serial
30	IRS	This terminal selects the resistors for the V5 voltage level adjustment. IRS="H" :Use the internal resistors IRS="H" :Do not use the internal resistors. The V5 voltage level is requlated by an external resistive voltage divider attached to the VR terminal.

4.2. Example of Power Supply

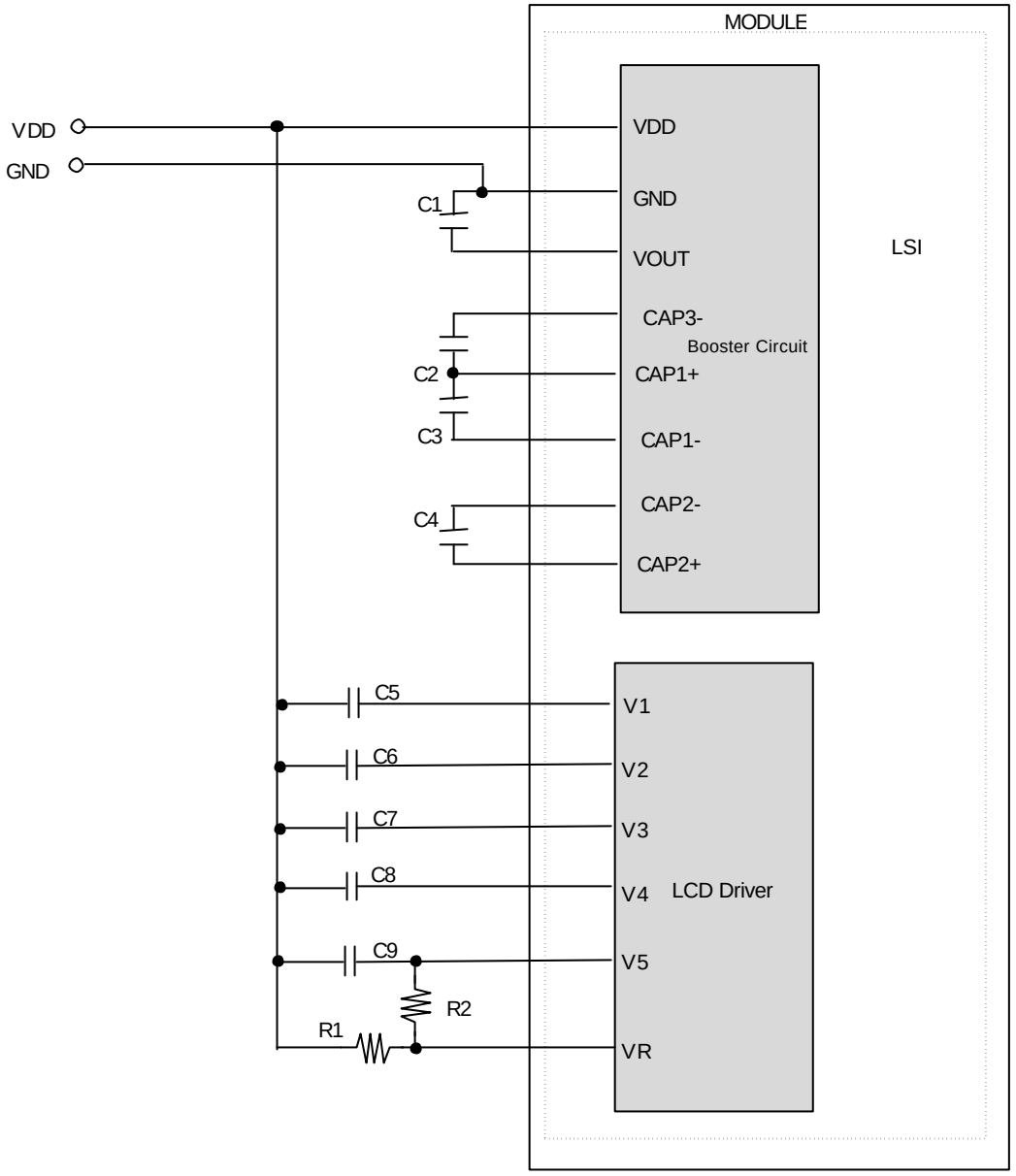

4.3.Block Diagram

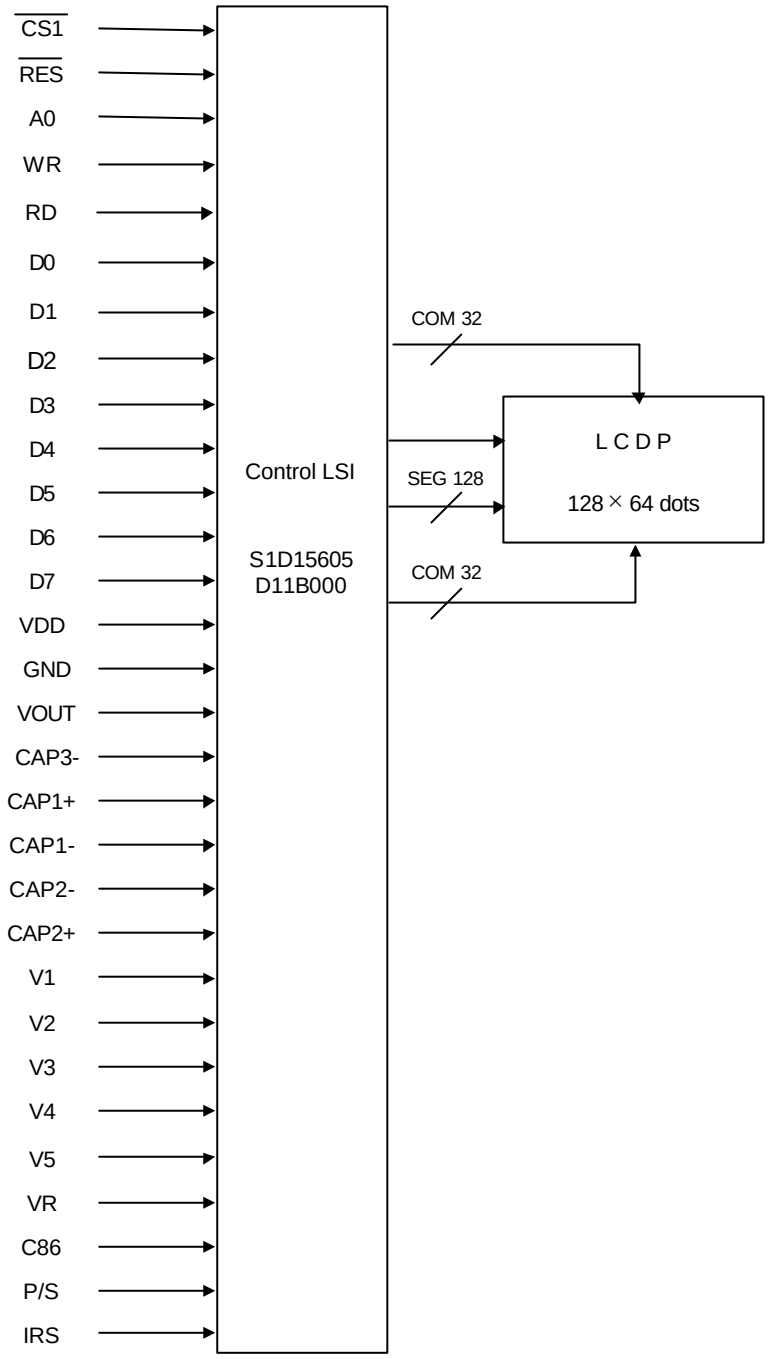

5.Test

No change on display and in operation under the following test condition.

Conditions: Unless otherwise specified, tests will be conducted under the following condition.
Temperature: 20±5°C
Humidity : 65±5%RH
tests will be not conducted under functioning state.

No.	Parameter	Conditions	Notes
1	High Temperature Operating	70°C±2°C, 96hrs (operation state)	
2	Low Temperature Operating	-20°C±2°C, 96hrs (operation state)	1
3	High Temperature Storage	85°C±2°C, 96hrs	2
4	Low Temperature Storage	-30°C±2°C, 96hrs	1,2
5	Damp Proof Test	40°C±2°C,90~95%RH, 96hrs	1,2
6	Temperature Cycle Test	5 Cycle 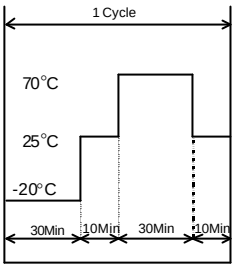 The function test shall be conducted after 1 hours storage at the normal temperature and humidity after removed from the test chamber.	1
7	Shock Test	To be measured after dropping from 60cm high on the concrete surface in packing state. 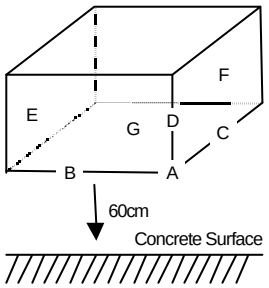 Dropping method corner dropping A corner : once Edge dropping B,C,D edge : once Face dropping E,F,G face : once	

Note 1 :No dew condensation to be observed.
Note 2 :The function test shall be conducted after 4 hours storage at the normal Temperature and humidity after removed from the test chamber.
Note 3 :Vibration test will be conducted to the product itself without putting it in a container.

6.Appearance Standards

6.1.Inspection conditions

The LCD shall be inspected under 40W white fluorescent light.
The distance between the eyes and the sample shall be more than 30cm.
All directions for inspecting the sample should be within 45°against perpendicular line.

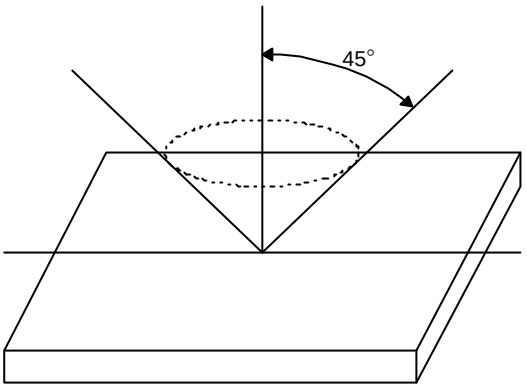

6.2.Definition of applicable Zones

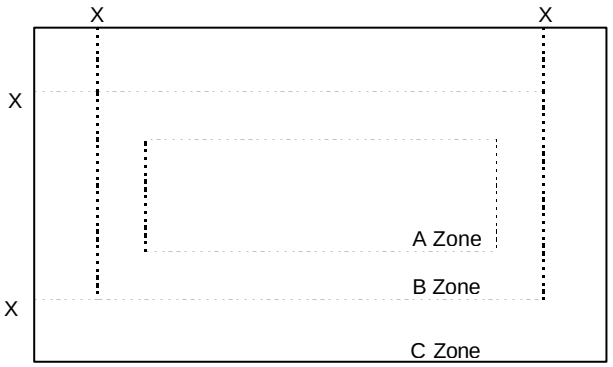

X : Maximum Seal Line

A Zone : Active display area
B Zone : Out of active display area ~ Maximum seal line
C Zone : Rest parts

A Zone + B Zone = Validity viewing area

6.3. Standards(middle scale, LED)

D = (Long + Short) / 2 * : Disregard Units : mm

No.	Parameter	Criteria
1	The Shape of Dot	(1) Pin Hole

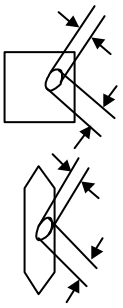

Dimension	Acceptable Number
D ≤ 0.10	*
0.10 < D ≤ 0.20	1 pc / dot(only segment)or less 5 pcs / cell or less

(2) Pattern Shift

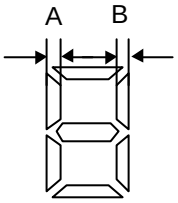

| A – B | ≤ 0.15

(3) Breakage or Chips / Deformation

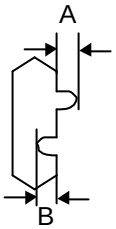

1.Segment Type

Dimension	Acceptable Number
A ≤ 0.10	*
B ≤ 0.15	*

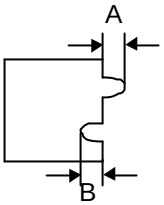

2.Dot Type

Dimension	Acceptable Number
A≤0.10	* (Should not be connected to next dot)
0.10<A≤0.15	1 pc / dot(only segment)or less 5 pcs / cell or less (Should not be connected to next dot)
B ≤ 0.15	*

3.Defective type extends over multiple numbers of dots

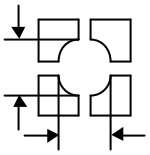

Dimension	Acceptable Number
D≤0.10	*
0.10<D≤0.20	1 pc / dot(only segment)or less 5 pcs / cell or less (Individual dot must secure 1/2 area or more)

D = (Long + Short) / 2 * : Disregard Units : mm

<table>
<tr><th>No.</th><th>Parameter</th><th>Criteria</th></tr>
<tr><td>2</td><td>Black and White Spots, Foreign Substances</td><td>(1) Round Shape
<table>
<tr><th rowspan="2">Zone / Dimension</th><th colspan="3">Acceptable Number</th></tr>
<tr><th>A</th><th>B</th><th>C</th></tr>
<tr><td>D ≤ 0.10</td><td>*</td><td>*</td><td>*</td></tr>
<tr><td>0.10< D ≤ 0.20</td><td>6</td><td>6</td><td>*</td></tr>
<tr><td>0.20< D ≤ 0.30</td><td>4</td><td>4</td><td>*</td></tr>
</table>
Individual dot must secure 1/2 area or more.

(2) Line Shape
<table>
<tr><th rowspan="2">Zone / Length / Width</th><th colspan="3">Acceptable Number</th></tr>
<tr><th>A</th><th>B</th><th>C</th></tr>
<tr><td>*</td><td>W≤0.03</td><td>*</td><td>*</td><td>*</td></tr>
<tr><td>L ≤2.0</td><td>0.03<W≤0.05</td><td>5</td><td>5</td><td>*</td></tr>
<tr><td>L ≤1.0</td><td>≤0.10</td><td>4</td><td>4</td><td>*</td></tr>
<tr><td>*</td><td>0.10<W</td><td colspan="2">In the same way (1)</td><td>*</td></tr>
</table>
No more than 9pcs as total.
(Refer to “Complex Foreign Substance Defects”)</td></tr>
<tr><td>3</td><td>Color Variation</td><td>Not to be conspicuous defects.</td></tr>
<tr><td>4</td><td>Air Bubbles (between glass & polarizer)</td><td>
<table>
<tr><th rowspan="2">Zone / Dimension</th><th colspan="3">Acceptable Number</th></tr>
<tr><th>A</th><th>B</th><th>C</th></tr>
<tr><td>D ≤ 0.30</td><td>*</td><td>*</td><td>*</td></tr>
<tr><td>0.30< D ≤ 0.40</td><td>3</td><td>*</td><td>*</td></tr>
<tr><td>0.40< D ≤ 0.60</td><td>2</td><td>3</td><td>*</td></tr>
</table>
No more than 3pcs as total.
(Refer to “Complex Foreign Substance Defects”)</td></tr>
<tr><td>5</td><td>Polarizer Scratches</td><td>Not to be conspicuous defects.</td></tr>
<tr><td>6</td><td>Polarizer Dirts</td><td>If the stains are removed easily from LCDP surface, the module is not defective.</td></tr>
<tr><td>7</td><td>Complex Foreign Substance Defects</td><td>Black spots, line shaped foreign substances or air bubbles between glass & polarizer should be 9pcs maximum in total.</td></tr>
<tr><td>8</td><td>Distance between Different Foreign Substance Defects</td><td>20mm or more</td></tr>
</table>

D = (Long + Short) / 2 * : Disregard Units : mm

No.	Parameter	Criteria
11	Chipped Glass	(1) Other than electrode pad areas and corner areas 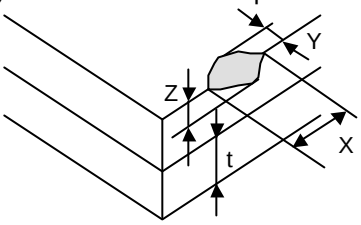 X: ≤10.0, Y: ≤1.5, Z: ≤t (2) Corner Areas 1.Lead Areas 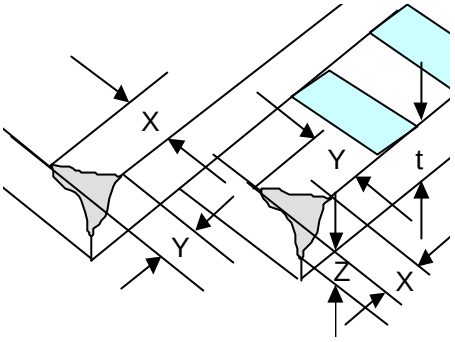 X: Half dimension till first Leads terminal Y: Same as terminal width Z: * It is allowed 1 chip as total length of Z sirection In case of 2 or more chips, Z ≤ 1/2t 2.Other than electrode pad Areas 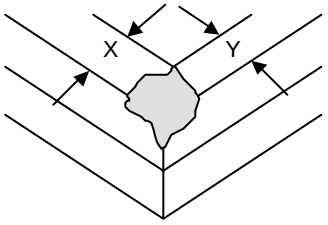 X+Y≤8.0 If the chipped area touches the seal line, the LCD is not acceptable.

7.Code System of Production Lot

The production lot of module is specified as follows.

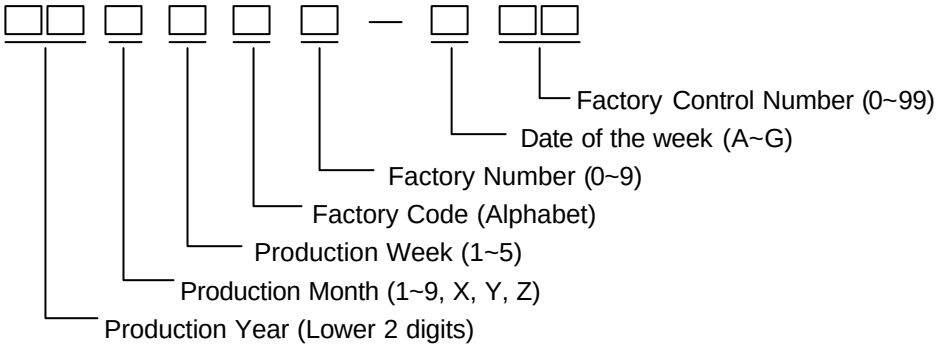

8.Type Number

The type number of module is specified as follows.

F-51553GNBJ-LW-AEN

9.Applying Precautions

Please contact us when questions and/or new problems not specified in this Specifications arise.

10.Precautions Relating Product Handling

The Following precautions will guide you in handling our product correctly.

1) Liquid crystal display devices
   1. The liquid crystal display device panel used in the liquid crystal display module is made of plate glass. Avoid any strong mechanical shock. Should the glass break handle it with care.
   2. The polarizer adhering to the surface of the LCD is made of a soft material. Guard against scratching it.

2) Care of the liquid crystal display module against static electricity discharge.
   1. When working with the module, be sure to ground your body and any electrical equipment you may be using. We strongly recommend the use of anti static mats (made of rubber), to protect work tables against the hazards of electrical shock.
   2. Avoid the use of work clothing made of synthetic fibers. We recommend cotton clothing or other conductivity-treated fibers.
   3. Slowly and carefully remove the protective film from the LCD module, since this operation can generate static electricity.

3) When the LCD module alone must be stored for long periods of time:
   1. Protect the modules from high temperature and humidity.
   2. Keep the modules out of direct sunlight or direct exposure to ultraviolet rays.
   3. Protect the modules from excessive external forces.

4) Use the module with a power supply that is equipped with an overcurrent protector circuit,since the module is not provided with this protective feature.

5) Do not ingest the LCD fluid itself should it leak out of a damaged LCD module. Should hands or clothing come in contact with LCD fluid, wash immediately with soap.

6) Conductivity is not guaranteed for models that use metal holders where solder connections between the metal holder and the PCB are not used. Please contact us to discuss appropriate ways to assure conductivity.

7) For models which use CFL:
   1. High voltage of 1000V or greater is applied to the CFL cable connector area. Care should be taken not to touch connection areas to avoid burns.
   2. Protect CFL cables from rubbing against the unit and thus causing the wire jacket to become worn.
   3. The use of CFLs for extended periods of time at low temperatures will significantly shorten their service life.

8) For models which use touch panels:
   1. Do not stack up modules since they can be damaged by components on neighboring modules.
   2. Do not place heavy objects on top of the product. This could cause glass breakage.

9) For models which use COG,TAB,or COF:
   1. The mechanical strength of the product is low since the IC chip faces out unprotected from the rear. Be sure to protect the rear of the IC chip from external forces.
   2. Given the fact that the rear of the IC chip is left exposed, in order to protect the unit from electrical damage, avoid installation configurations in which the rear of the IC chip runs the risk of making any electrical contact.

10) Models which use flexible cable, heat seal, or TAB:

1. In order to maintain reliability, do not touch or hold by the connector area.
2. Avoid any bending, pulling, or other excessive force, which can result in broken connections.

11) In case of buffer material such as cushion / gasket is assembled into LCD module, it may have an adverse effect on connecting parts (LCD panel-TCP / HEAT SEAL / FPC / etc., PCB-TCP / HEAT SEAL / FPC etc., TCP-HEAT SEAL, TCP-FPC, HEAT SEAL-FPC, etc.,) depending on its materials.
Please check and evaluate these materials carefully before use.

12) In case of acrylic plate is attached to front side of LCD panel, cloudiness (very small cracks) can occur on acrylic plate, being influenced by some components generated from polarizer film..
Please check and evaluate those acrylic materials carefully before use.

11.Warranty

This product has been manufactured to your company's specifications as a part for use in your company's general electronic products. It is guaranteed to perform according to delivery specifications. For any other use apart from general electronic equipment, we cannot take responsibility if the product is used in medical devices, nuclear power control equipment, aerospace equipment, fire and security systems, or any other applications in which there is a direct risk to human life and where extremely high levels of reliability are required. If the product is to be used in any of the above applications, we will need to enter into a separate product liability agreement.

1. We cannot accept responsibility for any defect, which may arise from additional manufacturing of the product (including disassembly and reassembly), after product delivery.

2. We cannot accept responsibility for any defect, which may arise after the application of strong external force to the product.

3. We cannot accept responsibility for any defect, which may arise due to the application of static electricity after the product has passed your company's acceptance inspection procedures.

4. When the product is in CFL models, CFL service life and brightness will vary According to the performance of the inverter used, leaks, etc. We cannot accept responsibility for product performance, reliability, or defect, which may arise.

5. We cannot accept responsibility for intellectual property of a third party, which may arise through the application of our product to your assembly with exception to those issues relating directly to the structure or method of manufacturing of our product.

6. Optrex will not be held responsible for any quality guarantee issue for defect products judged as Optrex-origin longer than 2 (two) years from Optrex production or 1(one) year from Optrex, Optrex America, Optrex Europe delivery which ever comes later.

Общество с ограниченной ответственностью «МосЧип» ИНН 7719860671 / КПП 771901001
Адрес: 105318, г.Москва, ул.Щербаковская д.3, офис 1107

Данный компонент на территории Российской Федерации

Вы можете приобрести в компании MosChip.

Для оперативного оформления запроса Вам необходимо перейти по данной ссылке:

http://moschip.ru/get-element

Вы можете разместить у нас заказ для любого Вашего проекта, будь то серийное производство или разработка единичного прибора.

В нашем ассортименте представлены ведущие мировые производители активных и пассивных электронных компонентов.

Нашей специализацией является поставка электронной компонентной базы двойного назначения, продукции таких производителей как XILINX, Intel (ex.ALTERA), Vicor, Microchip, Texas Instruments, Analog Devices, Mini-Circuits, Amphenol, Glenair.

Сотрудничество с глобальными дистрибьюторами электронных компонентов, предоставляет возможность заказывать и получать с международных складов практически любой перечень компонентов в оптимальные для Вас сроки.

На всех этапах разработки и производства наши партнеры могут получить квалифицированную поддержку опытных инженеров.

Система менеджмента качества компании отвечает требованиям в соответствии с ГОСТ Р ИСО 9001, ГОСТ РВ 0015-002 и ЭС РД 009

Офис по работе с юридическими лицами:

105318, г.Москва, ул.Щербаковская д.3, офис 1107, 1118, ДЦ «Щербаковский»

Телефон: +7 495 668-12-70 (многоканальный)

Факс: +7 495 668-12-70 (доб.304)

E-mail: info@moschip.ru

Skype отдела продаж:
moschip.ru
moschip.ru_4
moschip.ru_6
moschip.ru_9