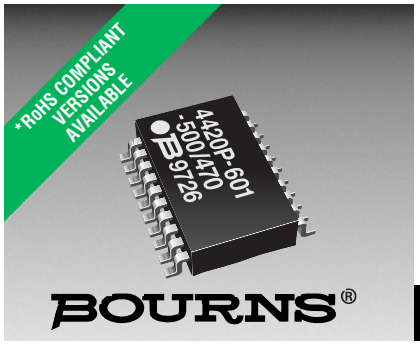

Features

- Cost-effective R-C construction
- Insulation resistance testing for reliability
- Molded surface mount or DIP packaging
- Compatible with automatic assembly equipment
- Custom value capability
- RoHS compliant version available ("L" part number suffix)

For information on EMI/RFI Filters, download Bourns' EMI/RFI Filters Application Note.

601 Series - RC Network T-Filters

General Description

Continual advances in digital IC technology are creating stringent demands on EMI/RFI levels in equipment.

EMI/RFI low pass filters are required in personal computers, data terminals, test equipment and process controllers for high frequency suppression into or out of electronic equipment.

Electrical Specifications - Resistors

Standard Resistance Range* ..... 10 ohms - 100 ohms
Series Resistance Tolerance ..... ±10 %
Temperature Coefficient of Resistance ..... ±300 ppm/°C
Operating Voltage ..... 25 volts maximum
Operating Temperatures ..... +10 °C to +85 °C
*Other Resistance Values Available, 10 ohms - 1 megohm

Electrical Specifications - Capacitors

Standard Capacitance Range ..... 50 pF to 200 pF
Capacitance Tolerance ..... ±30 %
Temperature Characteristic Z5U
Operating Temperatures ..... +10 °C to +85 °C
Voltage Rating ..... 25 volts
Dielectric Withstand Voltage ..... 2.5 x rated voltage
Insulation Resistance ..... 10,000 megohms minimum

Environmental Specifications - Resistors

	ΔR MAXIMUM
Thermal Shock	±0.5 %
Resistance to Solder Heat	±0.5 %
Terminal Strength	±0.5 %

Mechanical Specifications

Flammability ..... Conforms to UL94 V-0
Leadframe ..... Copper, solder coated
Body Material ..... Epoxy/Novolac
Lead Solderability ..... Meet requirements of MIL-STD-202 Method 208

For Standard Values Used in Capacitors, Inductors, and Resistors, click here.

Product Dimensions

4420P

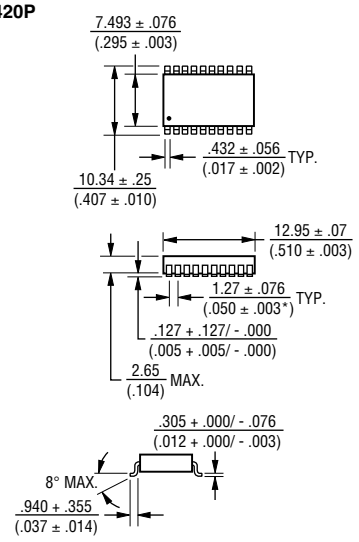

4118R AND 4120R

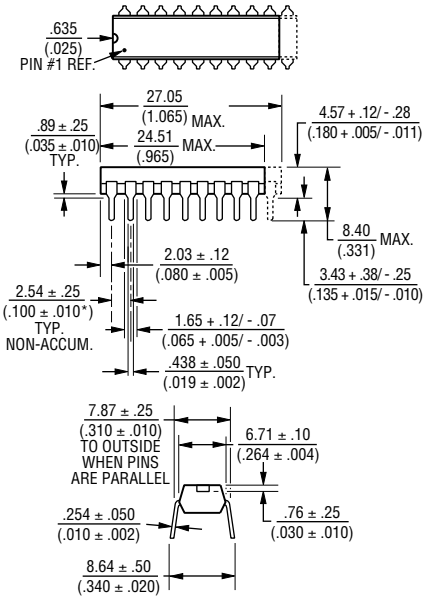

Governing dimensions are metric. Dimensions in parentheses are inches and are approximate.

*Terminal centerline to centerline measurements made at point of emergence of the lead from the body.

*RoHS Directive 2002/95/EC Jan. 27, 2003 including annex and RoHS Recast 2011/65/EU June 8, 2011.
Specifications are subject to change without notice.
The device characteristics and parameters in this data sheet can and do vary in different applications and actual device performance may vary over time.
Users should verify actual device performance in their specific applications.

Attenuation Vs. Frequency - Typical Capacitor Values With R= 25 Ohms

Attenuation vs. Frequency
Model 4120R-601-250/500
Model 4420-601-250/500
50pF - 3dB @ 84 MHz

Attenuation vs. Frequency
Model 4120R-601-250/201
Model 4420P-601-250/201
200pF - 3dB @ 21 MHz

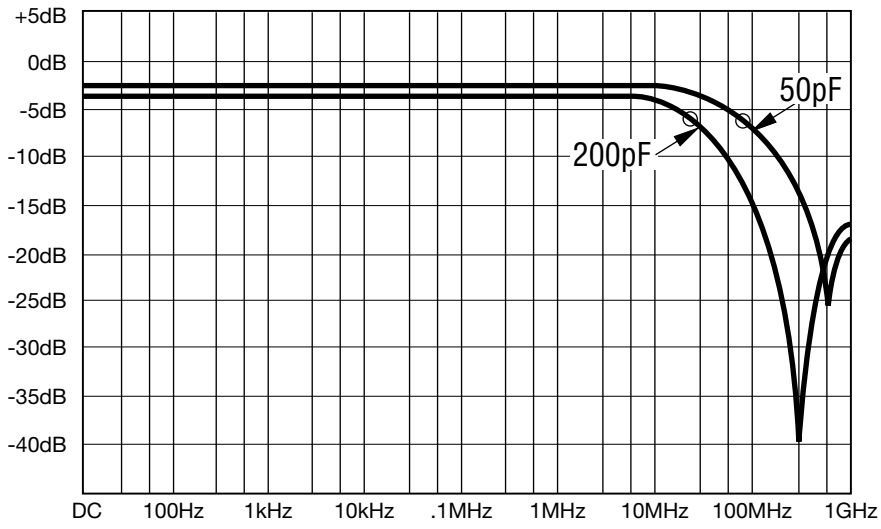

○ indicates - 3dB rolloff frequency (f_C)

Typical Circuit

4120R-601-RC/CC
4420R-601-RC/CC

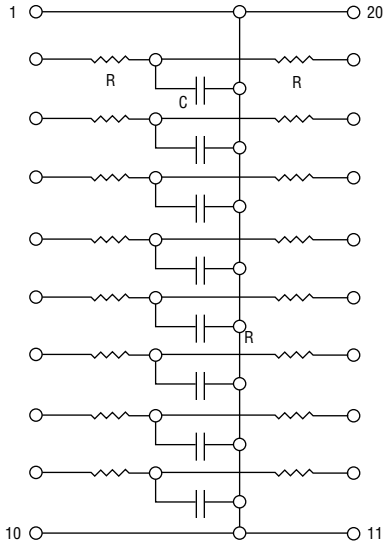

These low-pass filters are ideal for installation between I/O drivers and RS 232 connectors.

How To Order EMI/RFI Filter Networks

44 20 P - 601 - RC/CC __

Model
(44 = SMD SOIC Pkg)
(41 = Molded DIP)

Number of Pins

Physical Configuration
P = Surface Mount Device (SMD)
R = Molded DIP

Electrical Configuration
For tube packaging, use code "T06"

Resistance/Capacitance Code
- First 2 digits are significant
- Third digit represents the number of zeros to follow

Terminations
L = RoHS compliant (tin-plated)
Blank = Tin-lead plated

Insert RC/CC Code from table below to form part number.

RC	R	CC	C
250	25	500	50 pF
270	27	101	100 pF
470	47	181	180 pF
820	82	201	200 pF
101	100		

Consult factory for values not listed.

Packages Available

4420P-601-*RC/CC-SMD
4120R-601-*RC/CC-DIP
4118R-601-*RC/CC-DIP

*First two digits are significant. Third digit represents the number of zeros to follow.

Seven circuits in an 18-pin package.
Eight circuits in a 20-pin package.

Specifications are subject to change without notice.
The device characteristics and parameters in this data sheet can and do vary in different applications and actual device performance may vary over time.
Users should verify actual device performance in their specific applications.

Общество с ограниченной ответственностью «МосЧип» ИНН 7719860671 / КПП 771901001
Адрес: 105318, г.Москва, ул.Щербаковская д.3, офис 1107

Данный компонент на территории Российской Федерации

Вы можете приобрести в компании MosChip.

Для оперативного оформления запроса Вам необходимо перейти по данной ссылке:

http://moschip.ru/get-element

Вы можете разместить у нас заказ для любого Вашего проекта, будь то серийное производство или разработка единичного прибора.

В нашем ассортименте представлены ведущие мировые производители активных и пассивных электронных компонентов.

Нашей специализацией является поставка электронной компонентной базы двойного назначения, продукции таких производителей как XILINX, Intel (ex.ALTERA), Vicor, Microchip, Texas Instruments, Analog Devices, Mini-Circuits, Amphenol, Glenair.

Сотрудничество с глобальными дистрибьюторами электронных компонентов, предоставляет возможность заказывать и получать с международных складов практически любой перечень компонентов в оптимальные для Вас сроки.

На всех этапах разработки и производства наши партнеры могут получить квалифицированную поддержку опытных инженеров.

Система менеджмента качества компании отвечает требованиям в соответствии с ГОСТ Р ИСО 9001, ГОСТ РВ 0015-002 и ЭС РД 009

Офис по работе с юридическими лицами:

105318, г.Москва, ул.Щербаковская д.3, офис 1107, 1118, ДЦ «Щербаковский»

Телефон: +7 495 668-12-70 (многоканальный)

Факс: +7 495 668-12-70 (доб.304)

E-mail: info@moschip.ru

Skype отдела продаж:
moschip.ru
moschip.ru_4
moschip.ru_6
moschip.ru_9