MILLIPACS® HM

2.0 mm Hard Metric Interconnection System

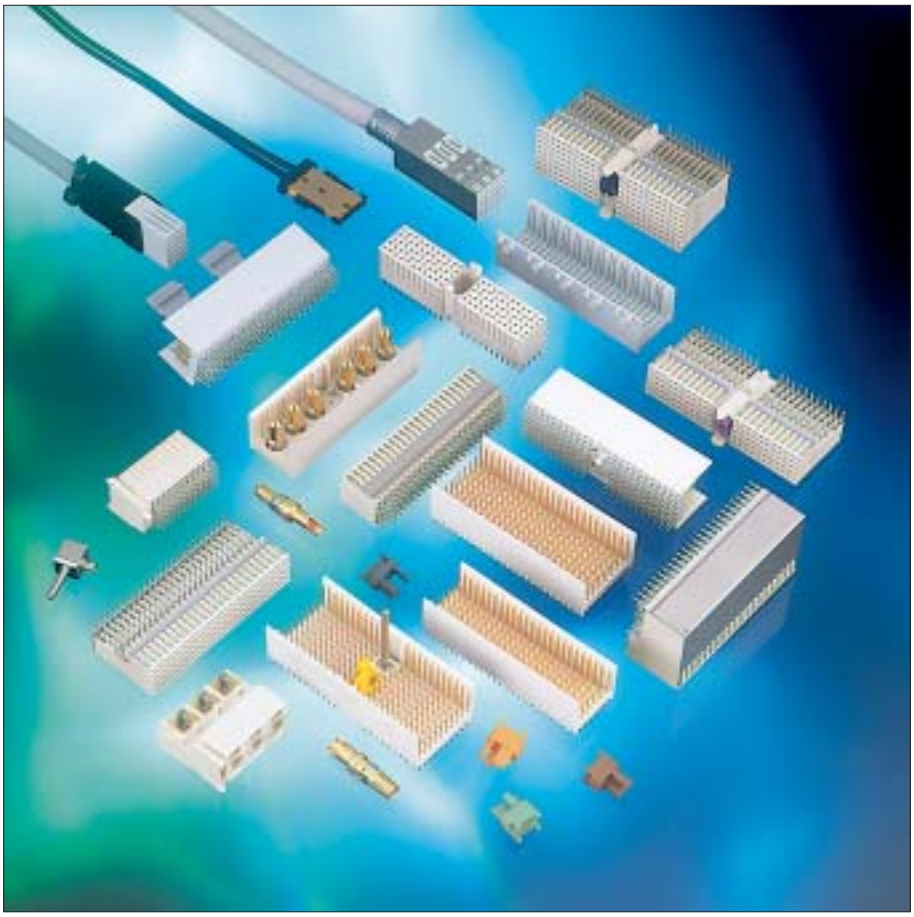

FCI

Millipacs® HM

FCI

Created in 1989, FCI - an Areva Group company - rapidly secured its place among the world's top three manufacturers of connectors and interconnect systems. With a turnover of 1.8 billion dollars in 2001, FCI currently operates in 29 countries where it covers the following markets: communications, data, consumer, industrial, military, aerospace, automotive and electrical power interconnect. The company employs 16,000 staff worldwide.

For more information, visit the website at www.fciconnect.com

FCI reserves the right to make any engineering refinements, alterations or improvements deemed necessary on its products. The dimensions appearing in this catalogue are thus subject to change without notice. When dimensions are critical detailed drawings should be requested.

Content

Page

Features & benefits 3

Product range overview 10

Male connectors 13

Female connectors 30

Male Right angle press-Fit connectors 53

Power Contacts 65

Coaxial Contacts 70

Coding devices 72

Application Tooling 73

Backplane layout 81

Part number list 87

Millipacs® HM

Features & benefits

Qualifications

- Designed in accordance with IEC 917 and IEC 61076-4-101.
- Fits DIN 43356 and IEEE 1301 Hard Metric Practice.
- Qualified by Bellcore as defined by GR-1217-CORE, iss. 1, November 1995.
- UL and CSA recognized.

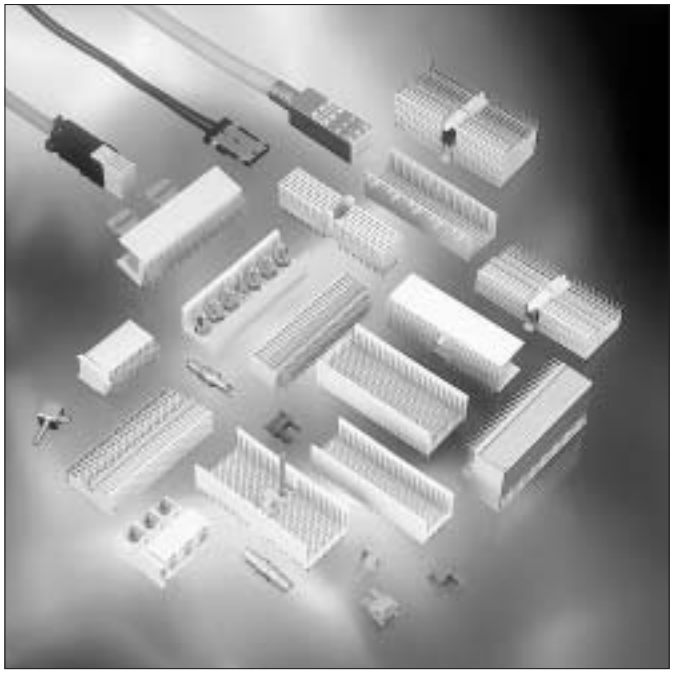

Main features

Millipacs® is a standard 2.0 mm Interconnection System featuring 5 and 8 contacts rows and 2 rows for shielding and grounding.
Millipacs® is a modular system built up by a number of specific types of modules with different functions and features signal modules with up to 200 signal contacts per 50 mm module (in 8 row versions) as well as hybrid modules for power, coax and/or FO contacts.
It provides 3 mating levels with 1.5 mm in between and a 2,5 mm wiping length for the shortest contact.

Both headers and receptacles are equipped with the well known FCI “eye of the needle” press-fit section for stable and reliable connections in the boards.
Misalignment of up to 2.5 mm and inclinations of 2° in both directions can be overcome.

FCI’s unique 1 piece female concept offers the most solid and reliable Hard Metric connector to the market. FCI is also offering the most versatile shielding solutions on their female concept: no shielding, top shielding, top and semi-rear shielding* or fully shielded modules are all standard available. Male modules are aligned next to each other without loss of contact positions and integrated edge polarization does guarantee a correct positioning of the different modules on the board. Module types without guiding features (type B and E) are to be used in between modules with the integrated guiding areas only.

Small pin sizes and related small PT hole diameters both at backplane and component board level guarantee that conventional PCB routing, manufacturing and component assembly can still be used. Maximum wiring density (up to 3 tracks in between 2 holes) can be achieved while no additional layers are required.

* on request

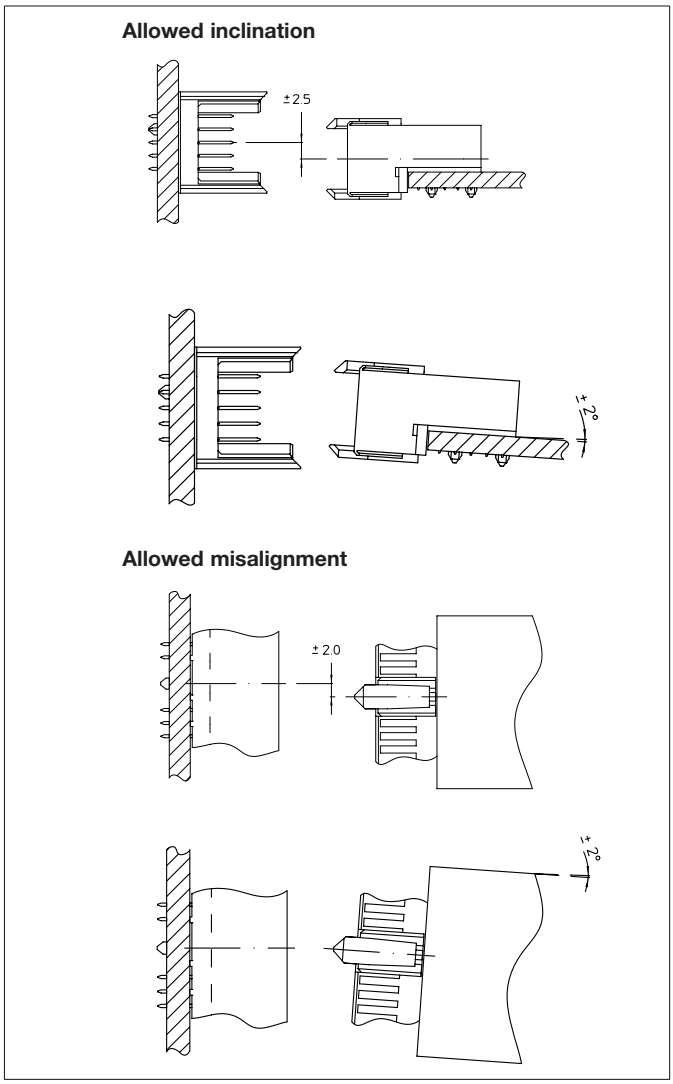

Millipacs® HM

Built-in dimensions

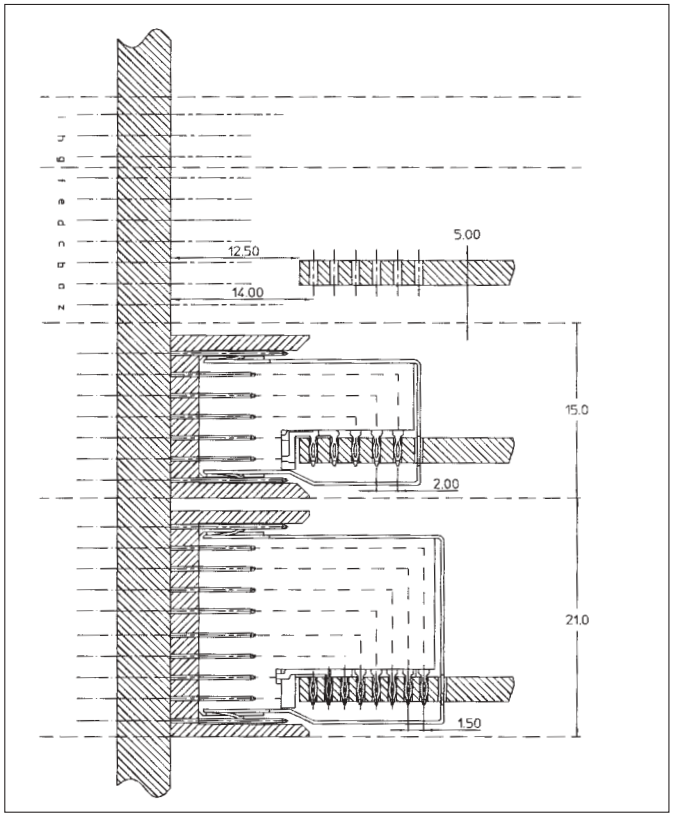

Contacts overview

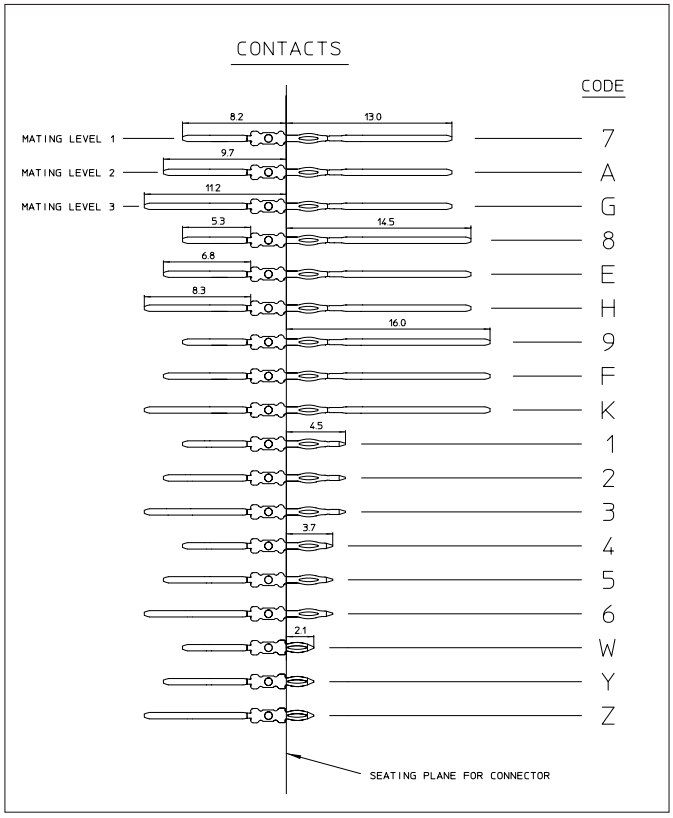

Signal contacts mating levels

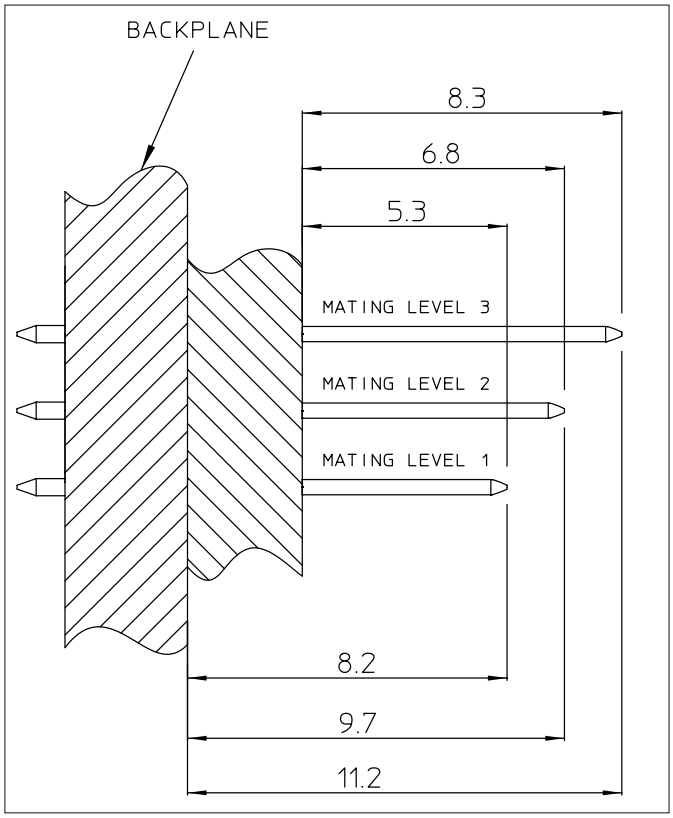

Millipacs® HM

Customer Request Form for special loading

Description

This chart can be used to fill in a specific contact pin configuration for your application. An overview of the existing pins (with the corresponding code to be filled in) is listed on page 4. Please, leave unfilled positions blank.

Note : Check on the FCI website to download the customer request form.

Connector type (circle corresponding letter):
A,B,B22,B19,AB,AB22,AB19,C,CR,D,DE,E,F,FR,M

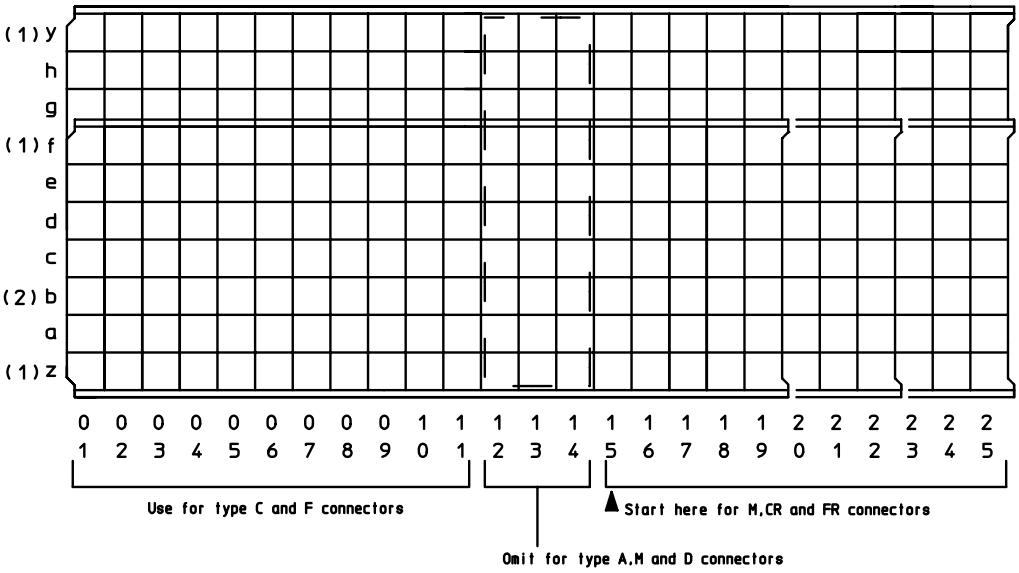

NOTES

(1) Ground return shield contacts only, mating level 3 required.
z+F for 5+2 row connector, z+y for 8+2 row connector.

(2) No level 3 contacts allowed when mating with right angle female connector

Name : _____

Company : _____

Address : _____

Phone : _____

Fax : _____

E-mail : _____

Performance level : ☐ 1 ☐ 2 ☐ 3

Remarks : _____

Features and benefits

High speed signal transmission

With modern electronic devices, higher bitrates require improved electrical performance of all components in terms of signal transmission. As a consequence, all picosecond-system designers should anticipate the need to control the impedance and cross talk.

In order to accommodate you with a high speed interconnection system, the high frequency characteristics such as reflection, rise time degradation and cross talk (forward and backward) are measured and simulated for different signal-to-ground configurations of the Millipacs® system.
A high accuracy is needed to characterize the connectors over a wide bandwidth or over a large range of rise times. The measurement set-up is shown in figure 1.

FCI's R&D specialists are available to help to define the best installed cost solution in terms of your specific High Speed requirements. A complete set of reports is available on request.

As an example, the results for a differential pin configuration on a 5 rows 2 mm grid Millipacs® backplane connector (figure 2) are presented.

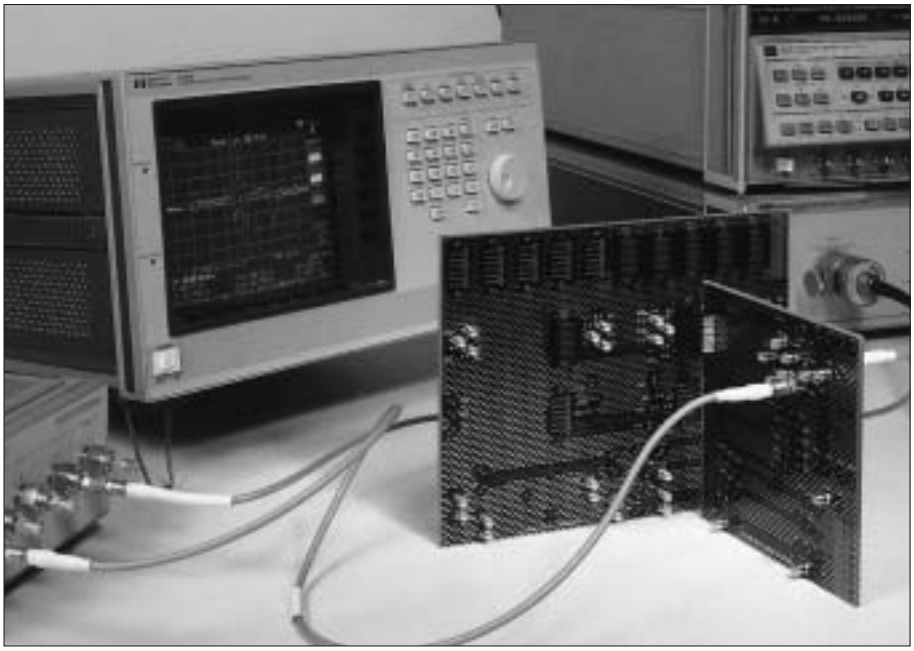

Fig.1 : Test set-up for high-frequency characterization of the Millipacs® backplane connectors

row E	**S+**	**S+**	**S+**	**S+**	**S+**
row D	**S-**	**S-**	**S-**	**S-**	**S-**
row C	**G**	**G**	**G**	**G**	**G**
row B	**S+**	**S+**	**S+**	**S+**	**S+**
row A	**S-**	**S-**	**S-**	**S-**	**S-**

Fig.2 : Differential pin configuration (G=ground; S=signal)

Figures 3 and 4 respectively show for pin pairs on rows A-B and D-E, the reflection and rise time degradation of the odd mode as a function of rise time. At larger rise times the reflection curves converge to 0%, because the transmission line behavior of the pins disappears at lower frequencies. At the lower rise times, the reflection coefficient still stays below 20%.

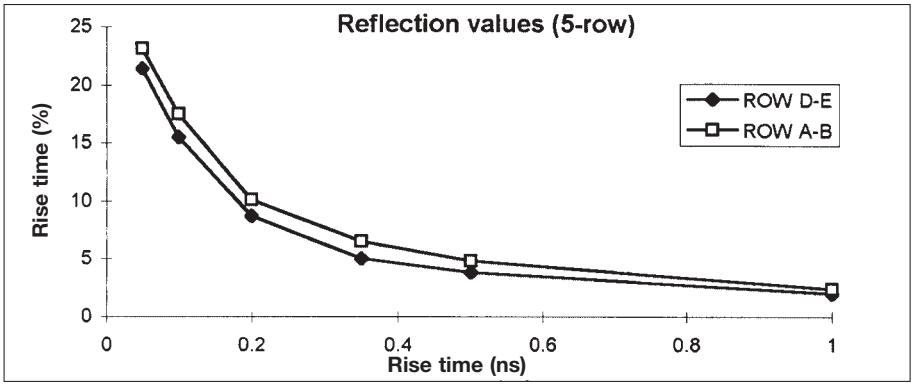

Fig.3 : Reflection values for the odd mode of pin pairs A-B and D-E as function of rise time

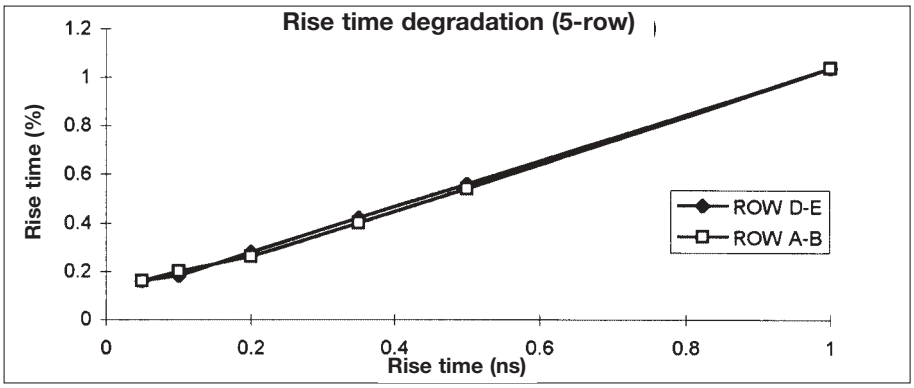

Fig.4 : Rise time degradation for the odd mode of pin pairs A-B and D-E as function of rise time

Figures 5 and 6 show the multi-line forward, respectively backward cross talk on the same pin pairs A-B and D-E i.e. the differential signal at the far- and the near-end of these pairs, when the neighboring pin pairs are excited in phase with differential signals. These worst case results show that for a rise time of 350 ps, the forward crosstalk is less than 2% and the backward crosstalk is about 10%.

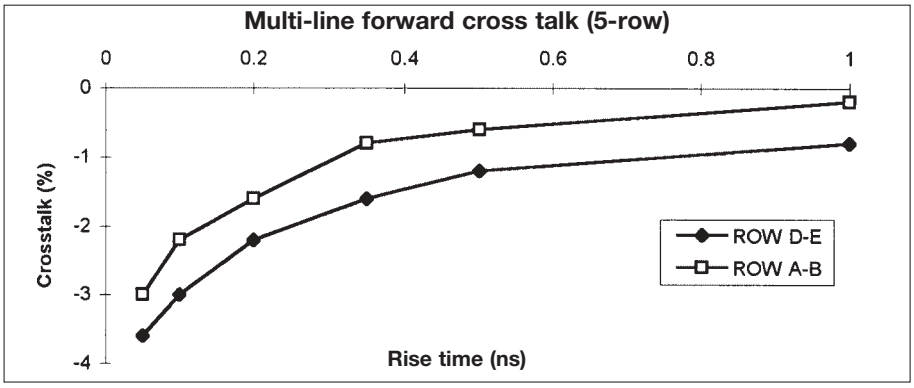

Fig.5 : Multi-line forward cross talk on pairs A-B and D-E as function of rise time

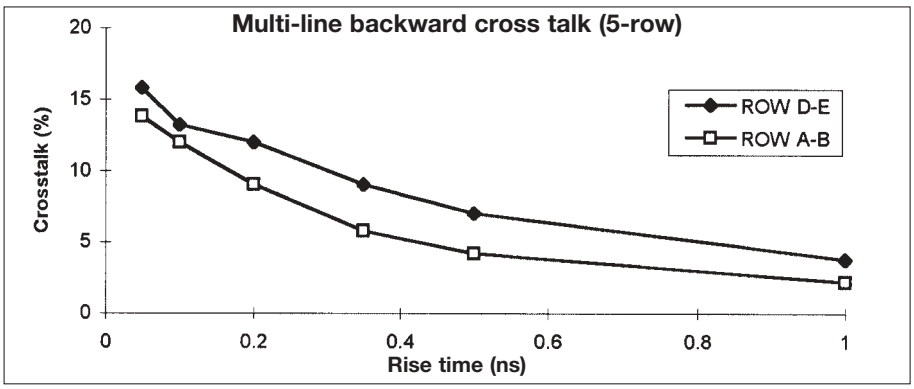

Fig.6 : Multi-line backward cross talk on pairs A-B and D-E as function of rise time

Features and benefits
Shielding performance

With the increasing coverage of the electromagnetic spectra and the constantly increasing use of electronic hardware, the need for control on electromagnetic interference is one of the main issues in modern system design. As a result, the Millipacs® connector system is anticipated with a complete range of shielding possibilities.
In order to evaluate the shielding performance of the Millipacs® connector a measurement set-up was designed based on a triaxial set-up (figure 7), formed by an innerline (the connector with his shield) and an outerline (the shielding with an external conductor). One of these transmission line structures is used to forge a current on the shield, the opposite is a sense line to detect the induced fields.

Shielding effectiveness is a functional method to characterize the shield leakage, since it offers us the relation between the measured power progressing from shielding leakage and the reference power delivered to the test-cel.

Figure 8 displays the shielding effectiveness of the non-shielded Millipacs® backpanel connector. As can be noticed, the shielding effectiveness is improved approx. 35 dB at higher frequencies (3 GHz) when shielding is introduced.

Fig.7 : Triaxial test cel

$$S.E.(dB)=10 \log \left(\frac{P_{leakage}}{P_{ref}} \right)$$

Formula 1 : Shielding effectiveness

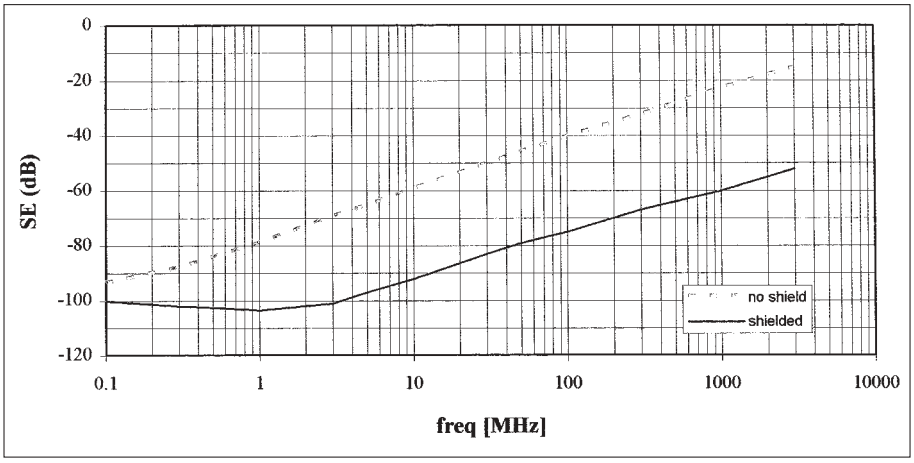

Fig.8 : Shielding effectiveness of the shielded and non-shielded version

Millipacs® HM

Male and female modules

Description

Connector modules with 5 (+2) or 8 (+2) row contact arrangement on a pitch of 2.0 mm featuring high density, shielding and high speed in a Hard Metric configuration.

Performance characteristics

Operating temperature :	-55°C to +125°C
Operating current*	:1.5 A at 20°C 1.0 A at 70°C
Test voltage*	:750 Vrms
Contact resistance	:20 mΩ max
Insulation resistance	:10^4 MΩ min
Mating force	:0.75 N max per contact pair
Withdrawal force	:0.15 N min per contact pair
Hertz stress	:200 Kpsi min
Misalignment	:Longitudinal ±2.0 mm Transversal ±2.5 mm
Inclination	:±2.0°

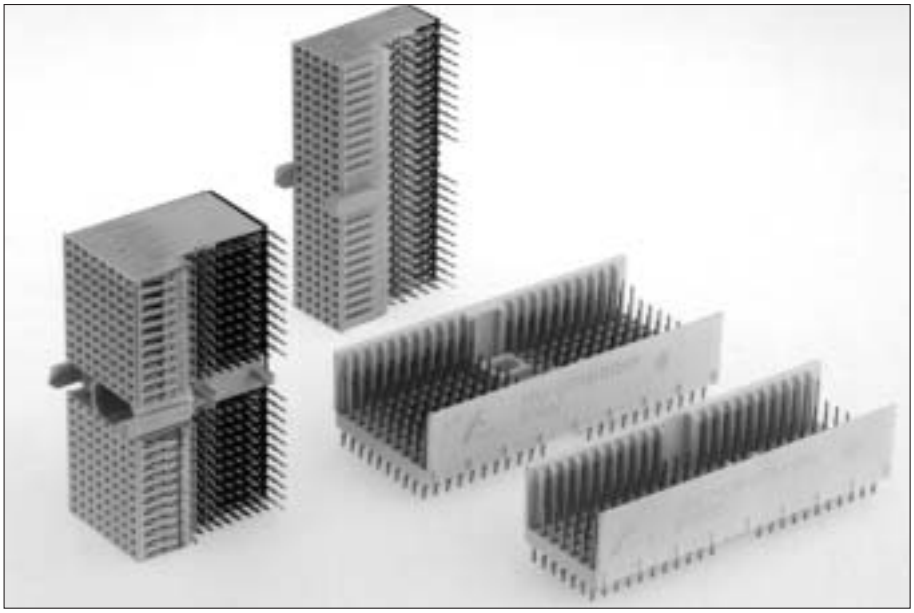

3 Contact levels	:5.30 mm 6.80 mm 8.30 mm
Normal force	:0.75 N min (EOL)
Creepage and clearance* :	0.6 mm min (free modules) 0.8 mm min (fixed modules)

* Fully loaded

Construction

Insulator material	:high temperature thermoplastic UL94V0
Contact material	:phosphor bronze
Contact plating	:selective Au over Ni on mating areas SnPb over Ni on press-fit and IDC areas

Performance levels :*
Front mating contacts (termination C,D)

Performance level	Mating cycles	Plating code
3	50	Z1
2	**250**	**N9**
1	500	E9

Front + rear mating contacts (termination K,M and N)

Performance level	Mating cycles	Plating code
3	50	GC
2	**250**	**GF**
1	500	GL

* Bellcore & Telcordia compliant plating and lubrication available. Please contact FCI for details.

Millipacs® HM

Product range overview

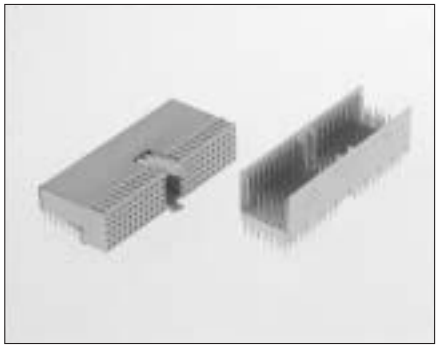

Type A connectors
- 50 mm module.
- 110 signal contacts.
- With “MP” multi-purpose center for polarization, pre-guiding and coding.
- Non-shielded and shielded versions.

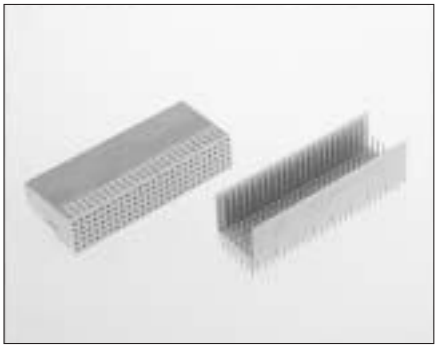

Type B connectors
- 38, 44 or 50 mm module.
- 95, 110 or 125 signal contacts.
- Non-shielded and shielded versions.

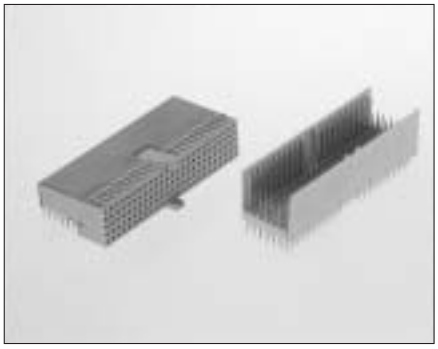

Type AB connectors
- 38, 44 or 50 mm module.
- 95, 110 or 125 signal contacts.
- With extra guiding pegs for polarization and pre-guiding.
- Non-shielded and shielded versions.

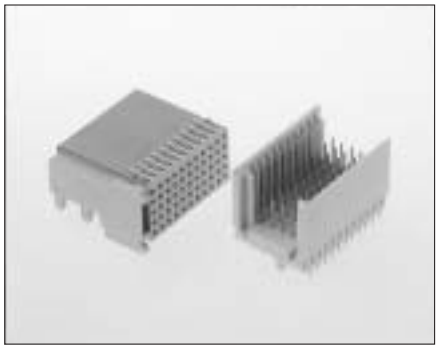

Type C connectors
- 25 mm module.
- 55 signal contacts.
- End position modules .
- With “MP” multi-purpose center for polarization and pre-guiding.
- Non-shielded and shielded versions.

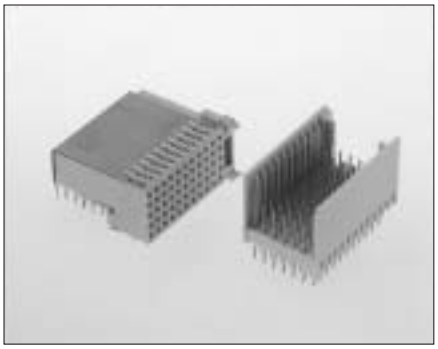

Type CR connectors
- 25 mm reversed C module.
- 55 signal contacts.
- Begin position modules.
- With “MP” multi-purpose center for polarization and pre-guiding.
- Non-shielded and shielded versions.

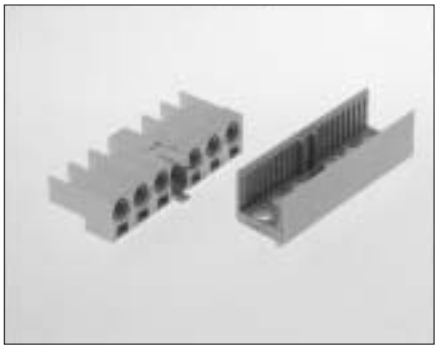

Type L connectors
- 50 mm module.
- 6 special contact cavities.
- With “MP” multi-purpose center for polarization, pre-guiding and coding.

Millipacs® HM

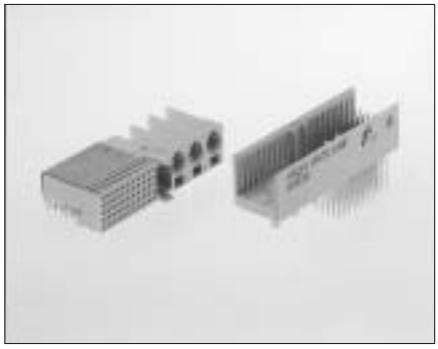

Type M connectors
- 50 mm module.
- 3 special contact cavities and 55 signal contacts.
- With “MP” multi-purpose center for polarization, pre-guiding and coding.
- Non-shielded and shielded versions.

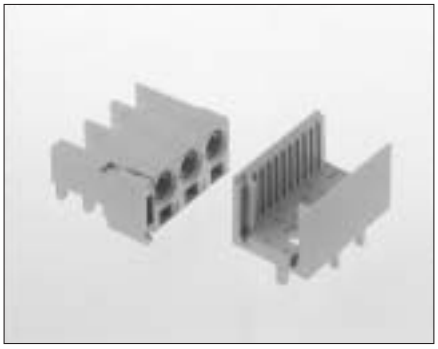

Type N connectors
- 25 mm module.
- 3 special contact cavities.
- End position modules only.
- With “MP” multi-purpose center for polarization and pre-guiding.

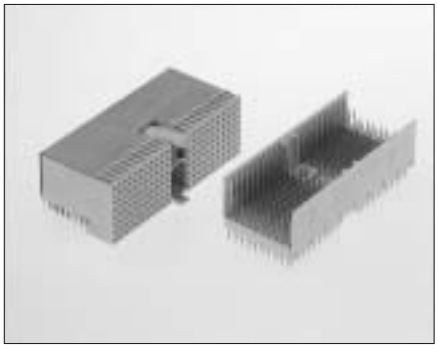

Type D connectors
- 50 mm module.
- 176 signal contacts.
- With “MP” multi-purpose center for polarization, pre-guiding and coding.
- Reduced PCB space.
- Additional guiding area.
- Non-shielded and shielded versions.

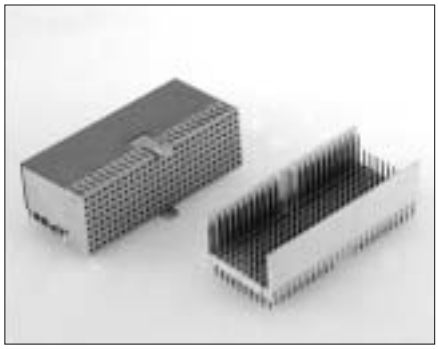

Type DE connectors
- 50 mm module.
- 200 signal contacts.
- Reduced PCB space.
- Non-shielded and shielded versions.
- With extra guiding pegs for polarization and pre-guiding.

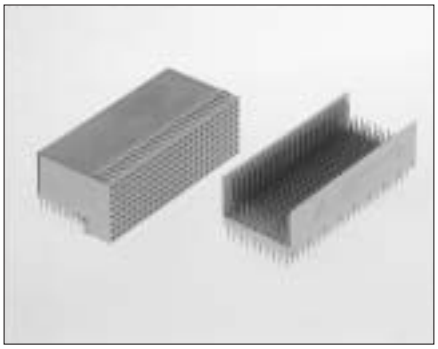

Type E connectors
- 50 mm module.
- 200 signal contacts.
- Reduced PCB space.
- Non-shielded and shielded versions.

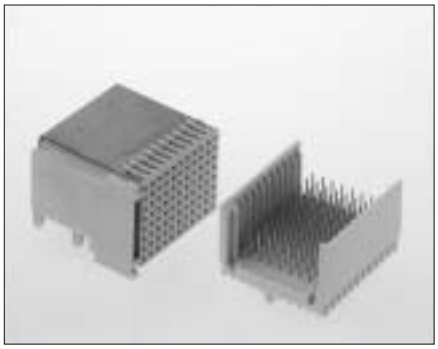

Type F connectors
- 25 mm module.
- 88 signal contacts.
- Reduced PCB space.
- End position modules .
- With “MP” multi-purpose center for polarization and pre-guiding.
- Non-shielded and shielded versions.

Millipacs® HM

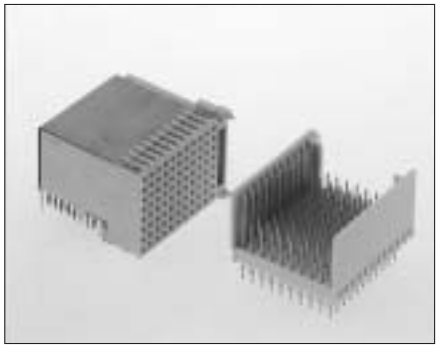

Type FR connectors
- 25 mm reversed F module.
- 88 signal contacts.
- Reduced PCB space.
- Begin position modules.
- With “MP” multi-purpose center for polarization and pre-guiding.
- Non-shielded and shielded versions.

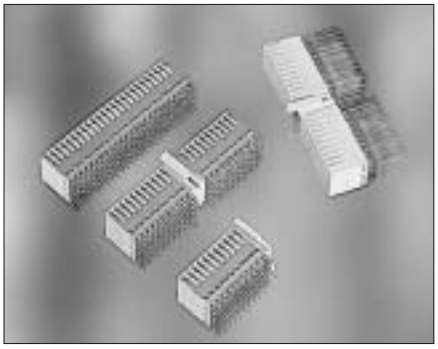

Straight female modules
- Type A, B and C female straight modules.
- To be mated with normal male header modules.
- Non-shielded and shielded versions.

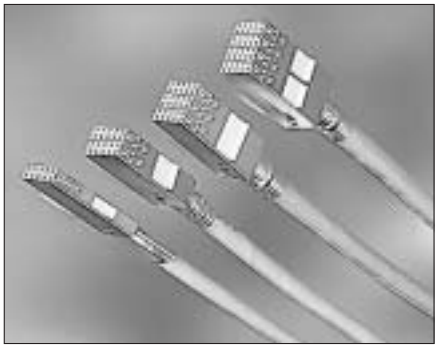

I/O cable connector modules
- To be mated with rear plug-up shrouds.
- Non-shielded and shielded versions.
- LF and HF versions.
- Moulded-in polarization features.

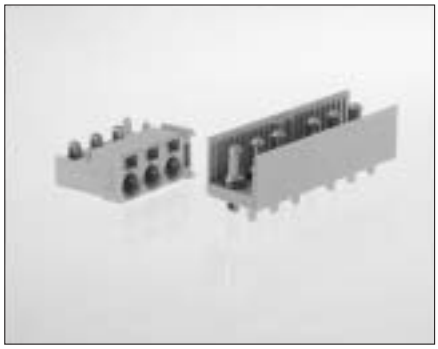

Pre-assembled power press-fit modules
- Type L, M and N modules.
- Non-shielded and shielded versions.
- Standard and advanced power contacts.

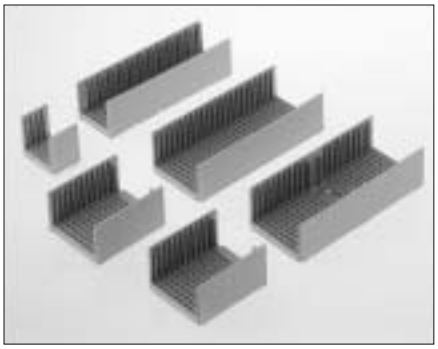

Board to Board shrouds, all types
- 10, 12, 25, 38, 44 and 50 mm modules.
- 5 and 8 row versions.
- Moulded-on spacers.

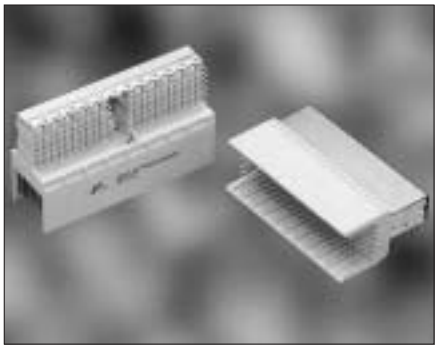

Male right angle modules
- Type A, B and C.
- Non-shielded and top shielded versions.

Millipacs® HM

5+2 Row male signal straight press-fit-to-board connector : TYPE A

Description

- 5 or 5+2 Row male header with 110 signal contacts.
- Integrated “MP” center for polarization and coding. (“MP” = multi purpose center)
- Press - fit terminations.
- 3 Mating levels.
- Non - shielded and shielded versions.
- Customized loading arrangements : see page 5.
- Board lay-out : see page 80.
- Module also used in CompactPCI; see CompactPCI catalog.

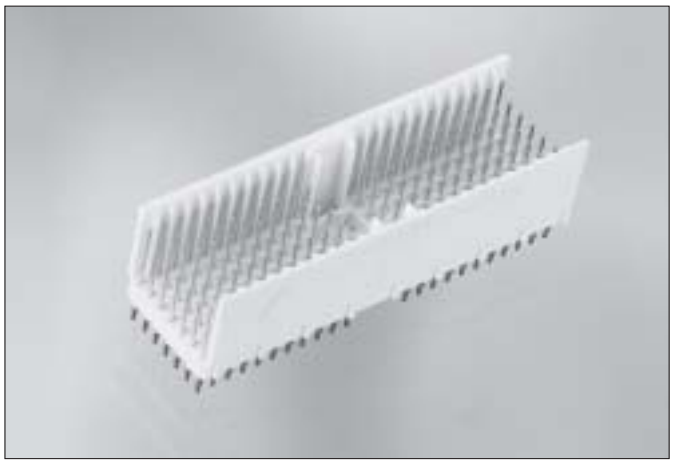

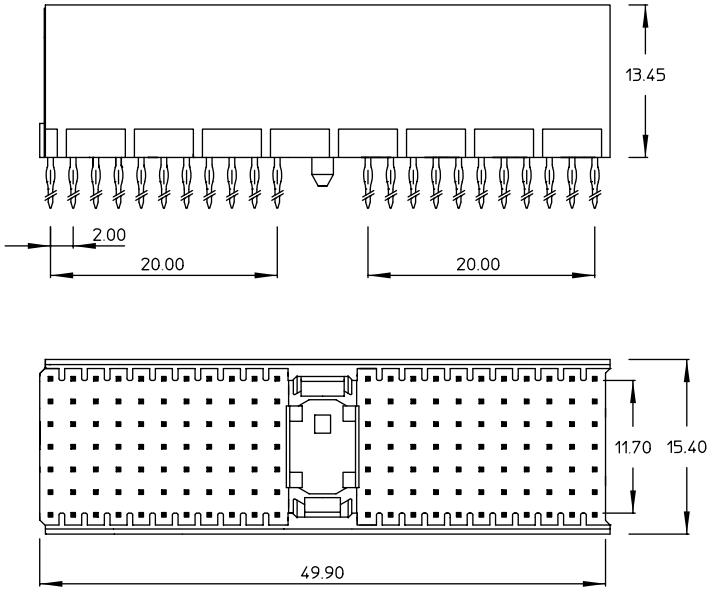

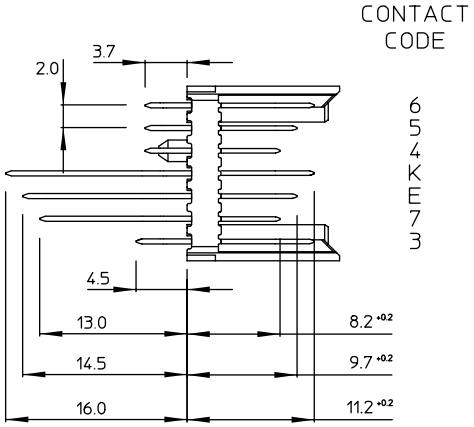

Standard loading patterns (seen from mating side)

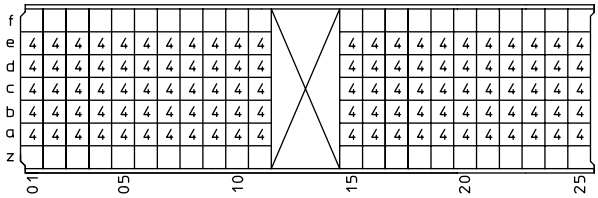

HM2P07PD5110N9

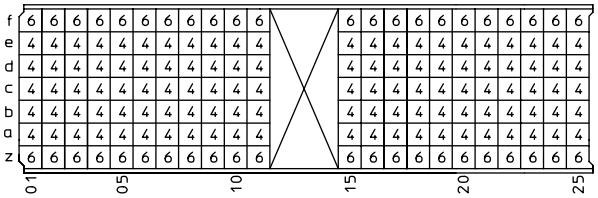

HM2P07PD5111N9

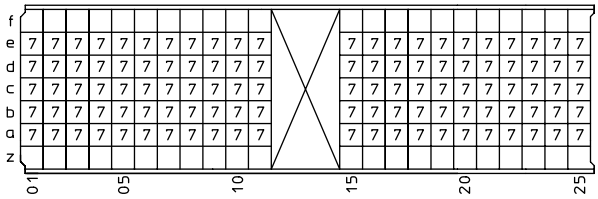

HM2P07PK5110GF

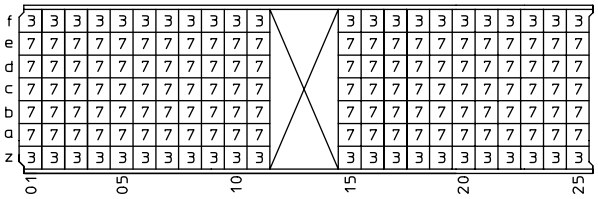

HM2P07PK5111GF

Millipacs® HM

5+2 Row male signal straight press-fit-to-board connector : TYPE B

Description

- 5 or 5+2 Row male header with 125 signal contacts.
- Press - fit terminations.
- 3 Mating levels.
- Non - shielded and shielded versions.
- Customized loading arrangements : see page 5.
- Board lay-out : see page 80.

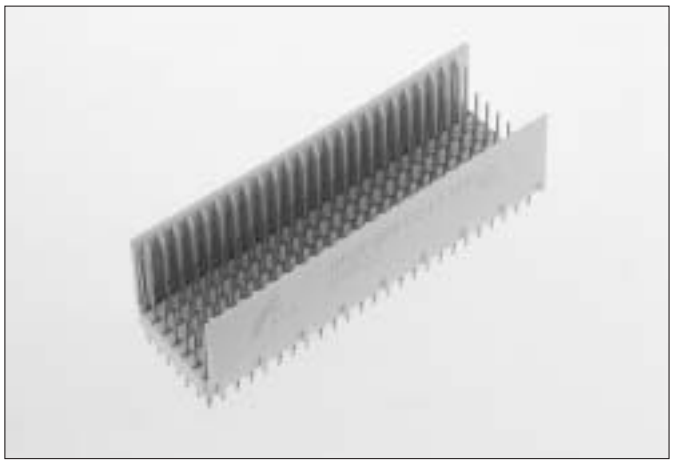

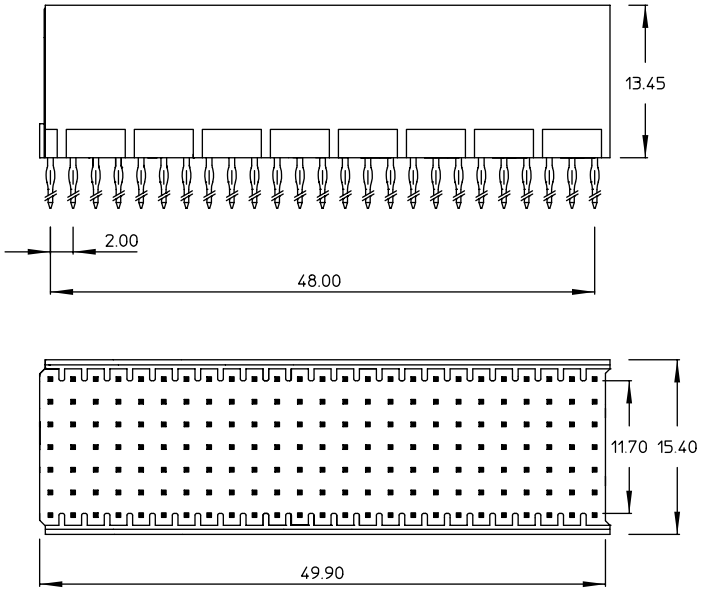

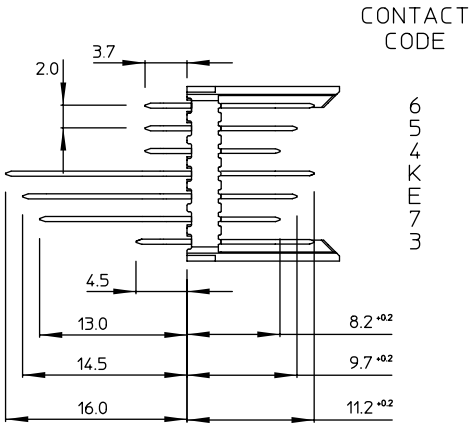

Standard loading patterns (seen from mating side)

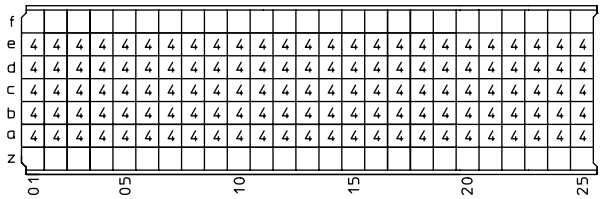

HM2P08PD5110N9

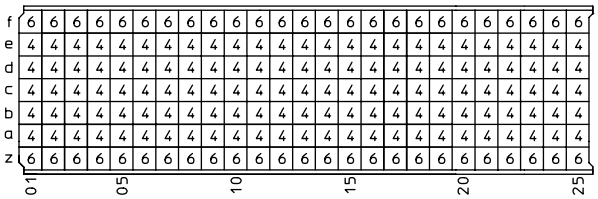

HM2P08PD5111N9

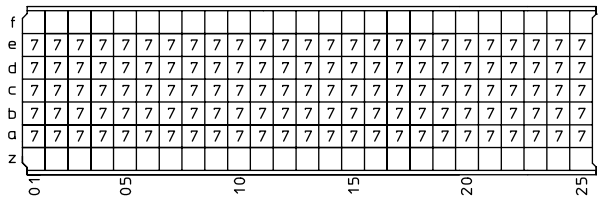

HM2P08PK5110GF

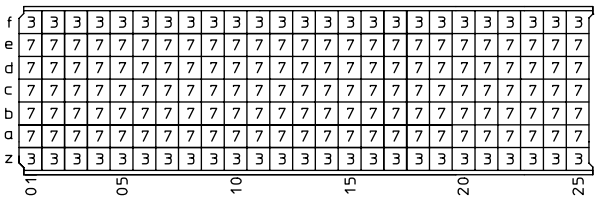

HM2P08PK5111GF

Millipacs® HM

5+2 Row male signal straight press-fit-to-board connector : TYPE B22

Description

- 5 or 5+2 Row male header with 110 signal contacts.
- Press - fit terminations.
- 3 Mating levels.
- Non - shielded and shielded versions.
- Customized loading arrangements : see page 5.
- Board lay-out : see page 80.
- Module also used in CompactPCI; see CompactPCI catalog.

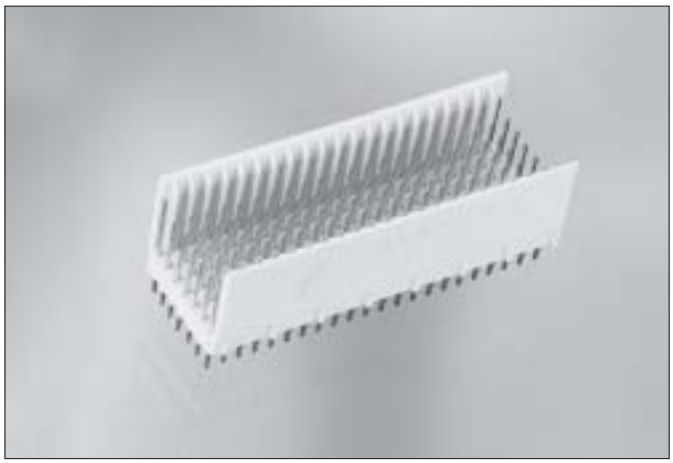

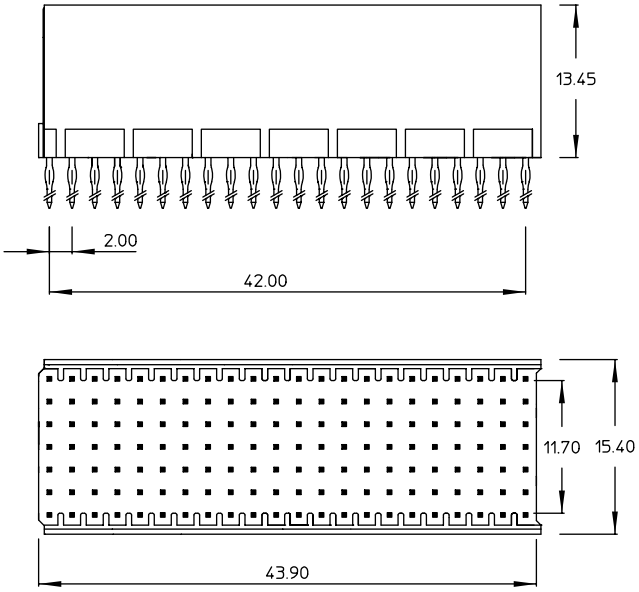

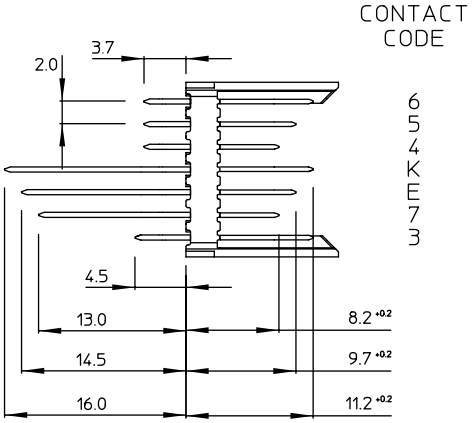

Standard loading patterns (seen from mating side)

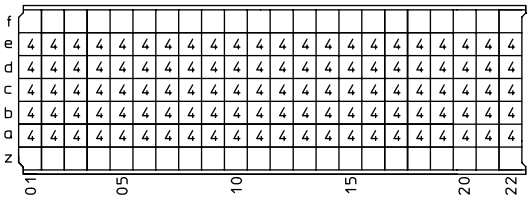

HM2P70PD5110N9

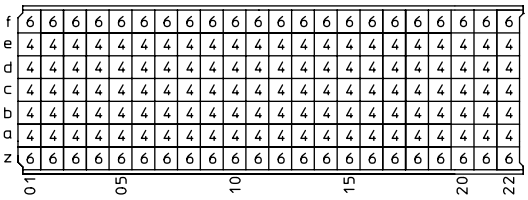

HM2P70PD5111N9

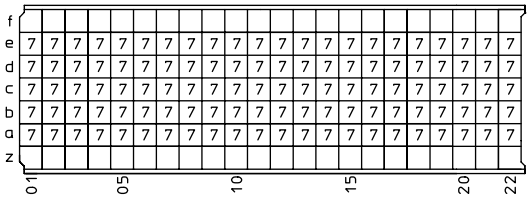

HM2P70PK5110GF

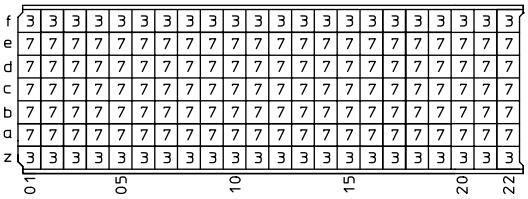

HM2P70PK5111GF

Millipacs® HM

5+2 Row male signal straight press-fit-to-board connector : TYPE B19

Description

- 5 or 5+2 Row male header with 95 signal contacts.
- Press - fit terminations.
- 3 Mating levels.
- Non - shielded and shielded versions.
- Customized loading arrangements : see page 5.
- Board lay-out : see page 80.
- Module also used in CompactPCI; see CompactPCI catalog.

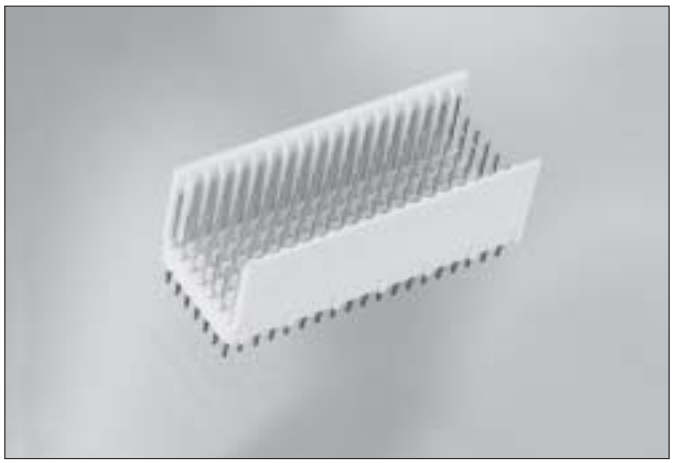

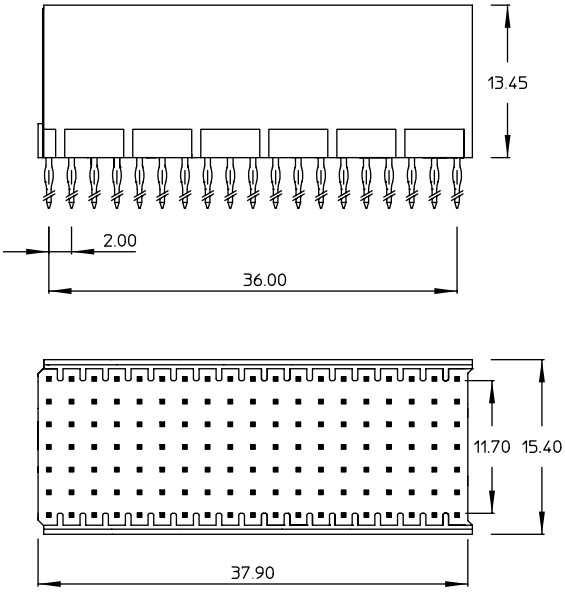

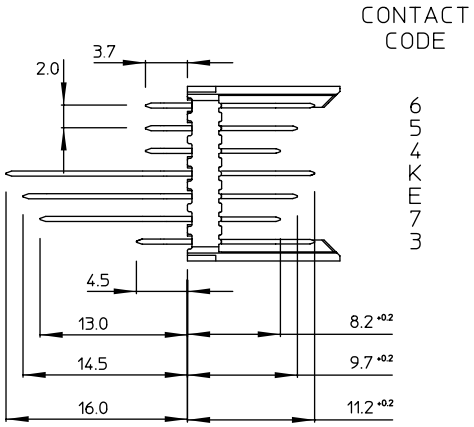

Standard loading patterns (seen from mating side)

	01				05				10				15				19
f																	
e	4	4	4	4	4	4	4	4	4	4	4	4	4	4	4	4	4
d	4	4	4	4	4	4	4	4	4	4	4	4	4	4	4	4	4
c	4	4	4	4	4	4	4	4	4	4	4	4	4	4	4	4	4
b	4	4	4	4	4	4	4	4	4	4	4	4	4	4	4	4	4
a	4	4	4	4	4	4	4	4	4	4	4	4	4	4	4	4	4
z																	

HM2P71PD5110N9

	01				05				10				15				19
f	6	6	6	6	6	6	6	6	6	6	6	6	6	6	6	6	6
e	4	4	4	4	4	4	4	4	4	4	4	4	4	4	4	4	4
d	4	4	4	4	4	4	4	4	4	4	4	4	4	4	4	4	4
c	4	4	4	4	4	4	4	4	4	4	4	4	4	4	4	4	4
b	4	4	4	4	4	4	4	4	4	4	4	4	4	4	4	4	4
a	4	4	4	4	4	4	4	4	4	4	4	4	4	4	4	4	4
z	6	6	6	6	6	6	6	6	6	6	6	6	6	6	6	6	6

HM2P71PD5111N9

	01				05				10				15				19
f																	
e	7	7	7	7	7	7	7	7	7	7	7	7	7	7	7	7	7
d	7	7	7	7	7	7	7	7	7	7	7	7	7	7	7	7	7
c	7	7	7	7	7	7	7	7	7	7	7	7	7	7	7	7	7
b	7	7	7	7	7	7	7	7	7	7	7	7	7	7	7	7	7
a	7	7	7	7	7	7	7	7	7	7	7	7	7	7	7	7	7
z																	

HM2P71PK5110GF

	01				05				10				15				19
f	3	3	3	3	3	3	3	3	3	3	3	3	3	3	3	3	3
e	7	7	7	7	7	7	7	7	7	7	7	7	7	7	7	7	7
d	7	7	7	7	7	7	7	7	7	7	7	7	7	7	7	7	7
c	7	7	7	7	7	7	7	7	7	7	7	7	7	7	7	7	7
b	7	7	7	7	7	7	7	7	7	7	7	7	7	7	7	7	7
a	7	7	7	7	7	7	7	7	7	7	7	7	7	7	7	7	7
z	3	3	3	3	3	3	3	3	3	3	3	3	3	3	3	3	3

HM2P71PK5111GF

Millipacs® HM

5+2 Row male signal straight press-fit-to-board connector : TYPE AB

Description

- 5 or 5+2 Row male header with 125 signal contacts.
- Integrated polarization and guiding area without loss of signal contact positions.
- Press - fit terminations.
- 3 Mating levels.
- Non - shielded and shielded versions.
- Customized loading arrangements : see page 5.
- Board lay-out : see page 80.

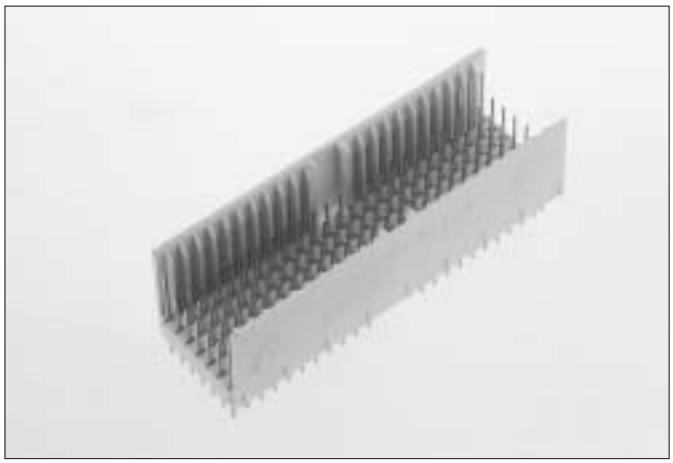

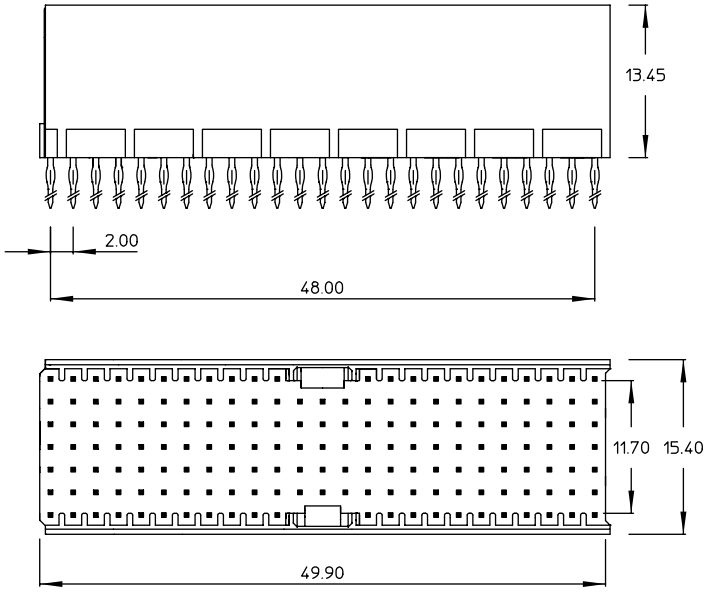

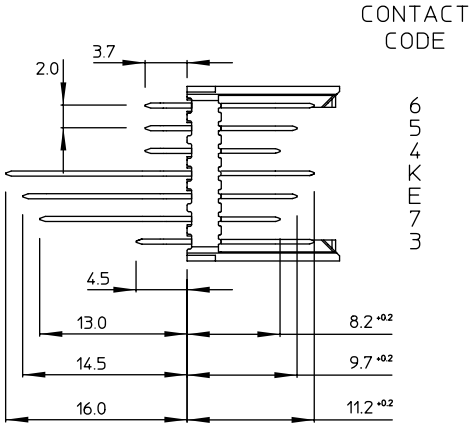

Standard loading patterns (seen from mating side)

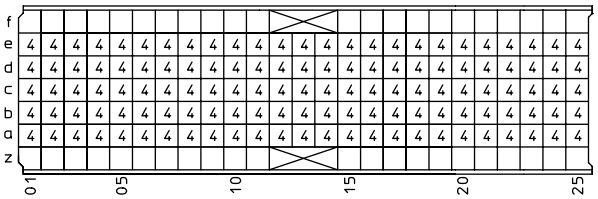

HM2P65PD5110N9

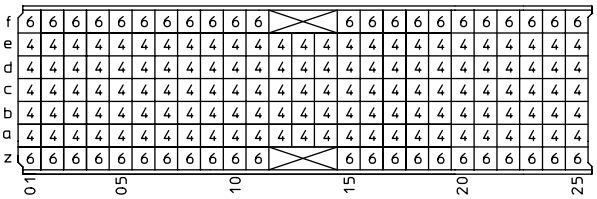

HM2P65PD5111N9

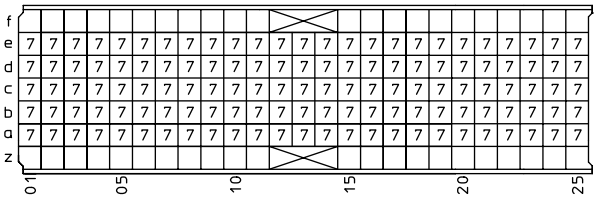

HM2P65PK5110GF

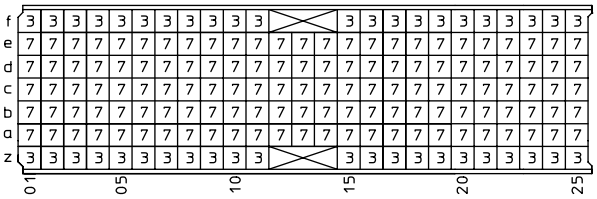

HM2P65PK5111GF

Millipacs® HM

5+2 Row male signal straight press-fit-to-board connector : TYPE AB22

Description

- 5 or 5+2 Row male header with 110 signal contacts.
- Integrated polarization and guiding area without loss of signal contact positions.
- Press - fit terminations.
- 3 Mating levels.
- Non - shielded and shielded versions.
- Customized loading arrangements : see page 5.
- Board lay-out : see page 80.
- Module also used in CompactPCI; see CompactPCI catalog.

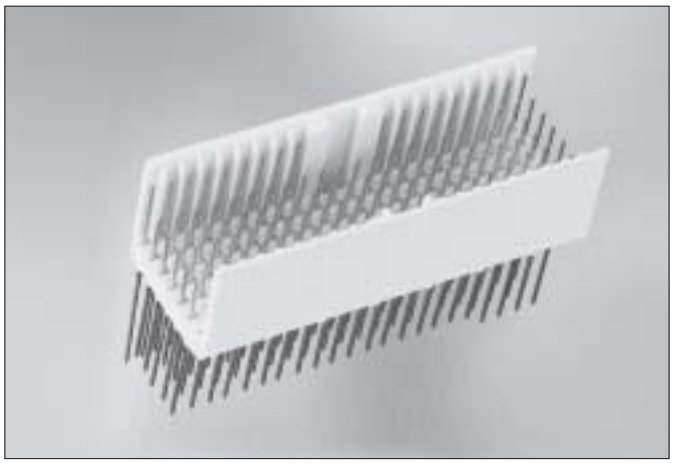

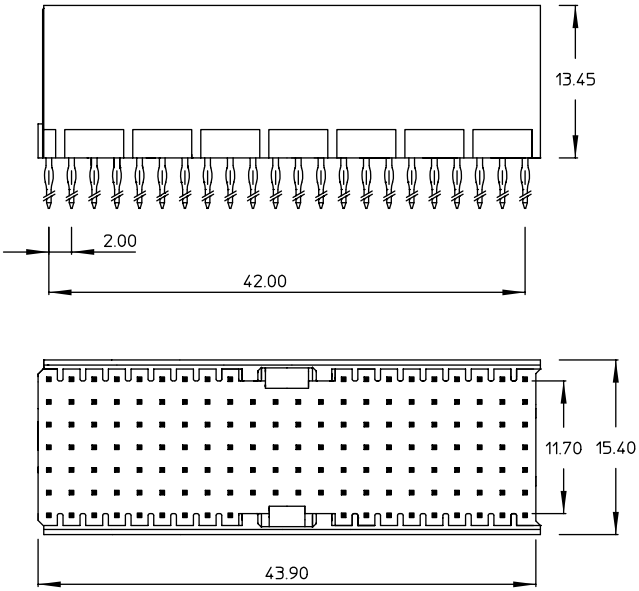

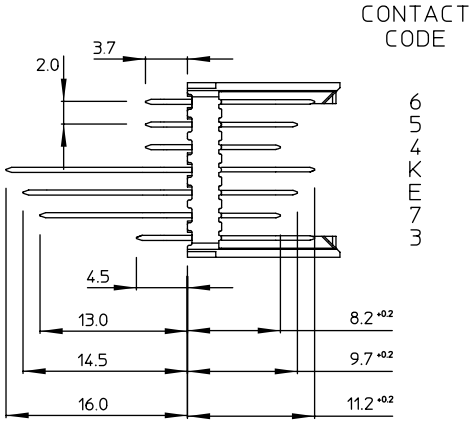

Standard loading patterns (seen from mating side)

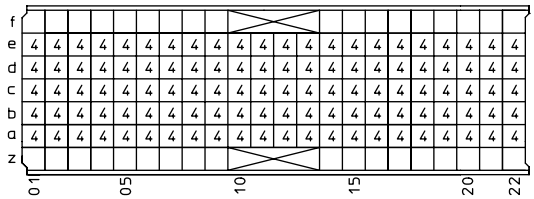

HM2P66PD5110N9

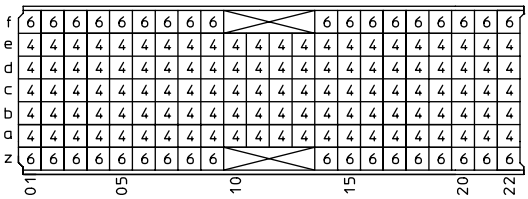

HM2P66PD5111N9

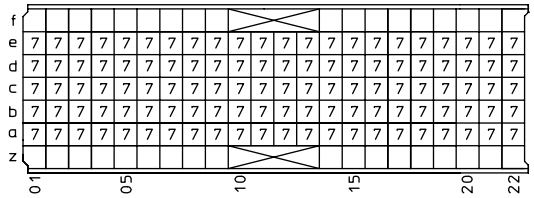

HM2P66PK5110GF

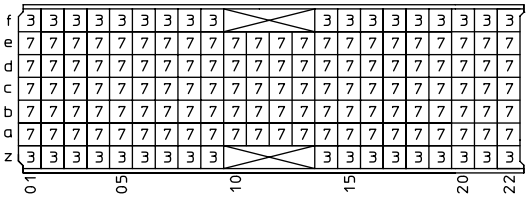

HM2P66PK5111GF

Millipacs® HM

5+2 Row male signal straight press-fit-to-board connector : TYPE AB19

Description

- 5 or 5+2 Row male header with 95 signal contacts.
- Integrated polarization and guiding area without loss of signal contact positions.
- Press - fit terminations.
- 3 Mating levels.
- Non - shielded and shielded versions.
- Customized loading arrangements : see page 5.
- Board lay-out : see page 80.
- Module also used in CompactPCI; see CompactPCI catalog.

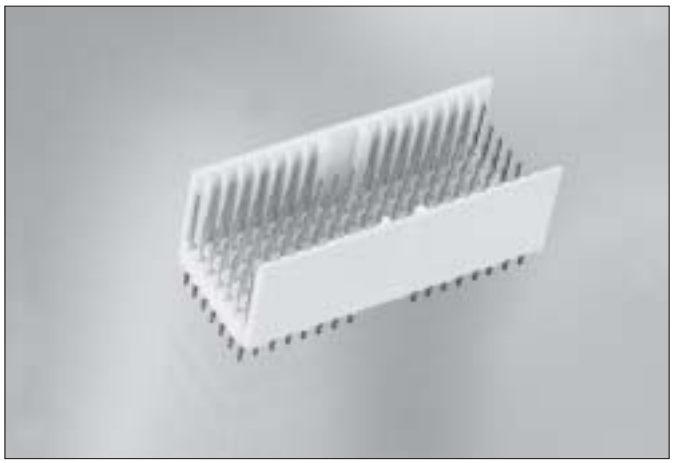

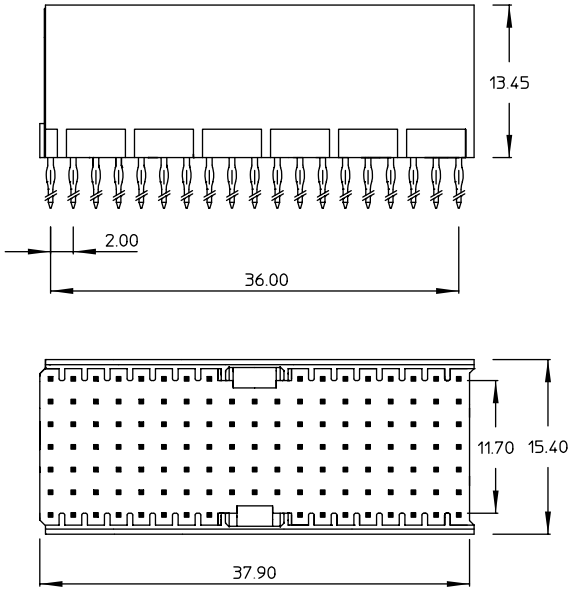

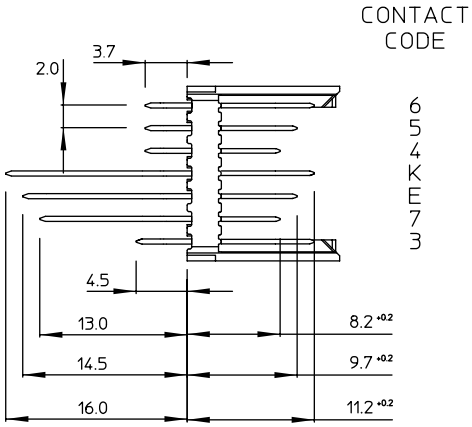

Standard loading patterns (seen from mating side)

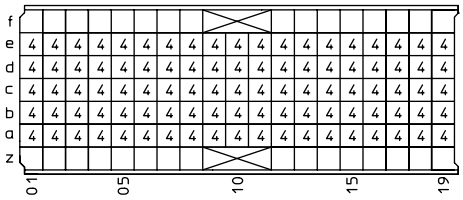

HM2P67PD5110N9

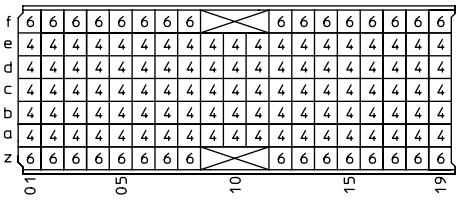

HM2P67PD5111N9

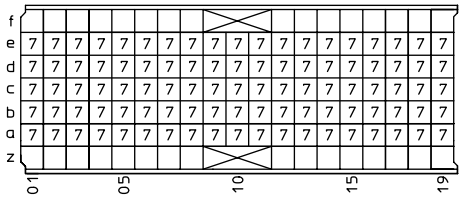

HM2P67PK5110GF

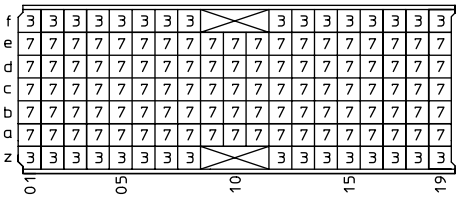

HM2P67PK5111GF

Millipacs® HM

5+2 Row male signal straight press-fit-to-board connector : TYPE C

Description

- 5 or 5+2 Row male header with 55 signal contacts.
- Integrated area for guiding & polarization.
- Press - fit terminations.
- 3 Mating levels.
- Non - shielded and shielded versions.
- Customized loading arrangements : see page 5.
- Board lay-out : see page 80.

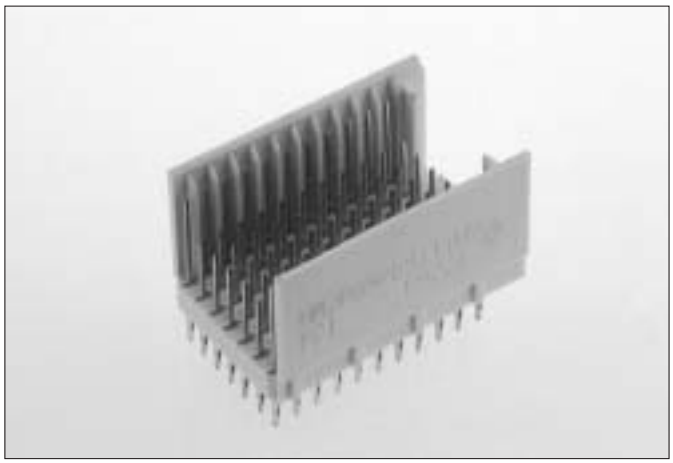

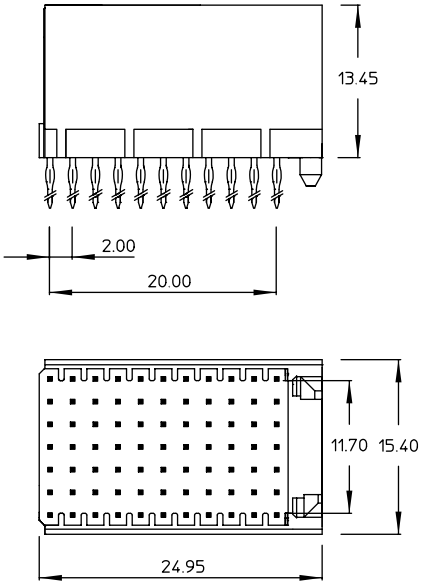

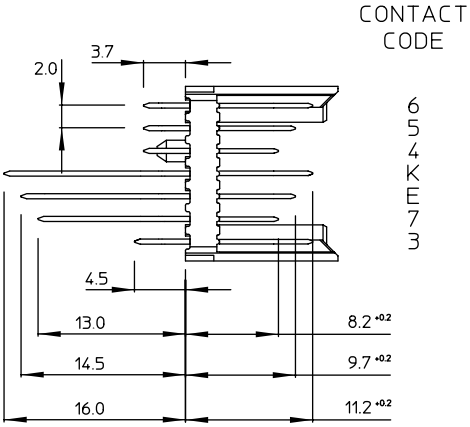

Standard loading patterns (seen from mating side)

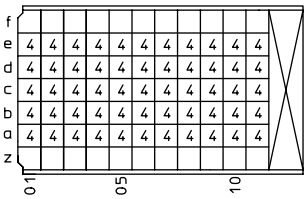

HM2P09PD5110N9

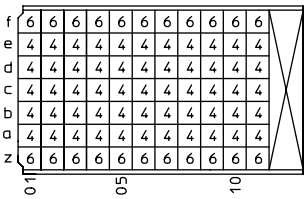

HM2P09PD5111N9

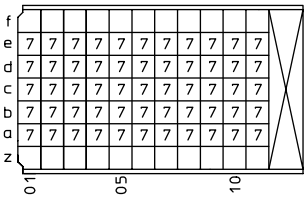

HM2P09PK5110GF

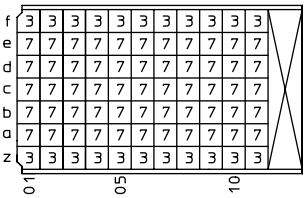

HM2P09PK5111GF

Millipacs® HM

5+2 Row male signal straight press-fit-to-board connector : TYPE CR (C Reversed, FCI terminology)

Description

- 5 or 5+2 Row male header with 55 signal contacts.
- Integrated area for guiding & polarization.
- Press - fit terminations.
- 3 Mating levels.
- Non - shielded and shielded versions.
- Customized loading arrangements : see page 5.
- Board lay-out : see page 80.

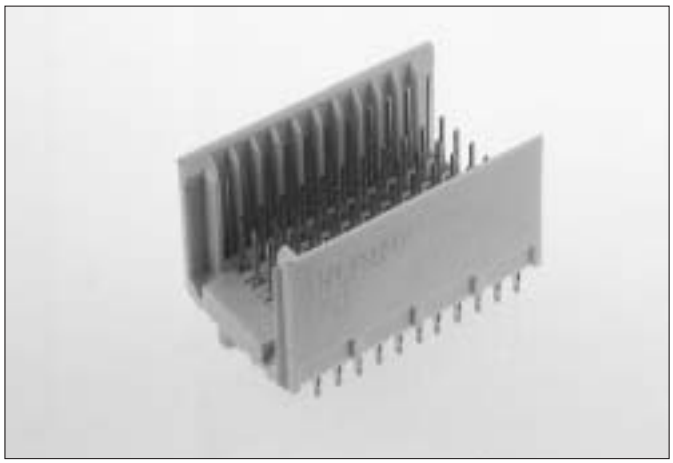

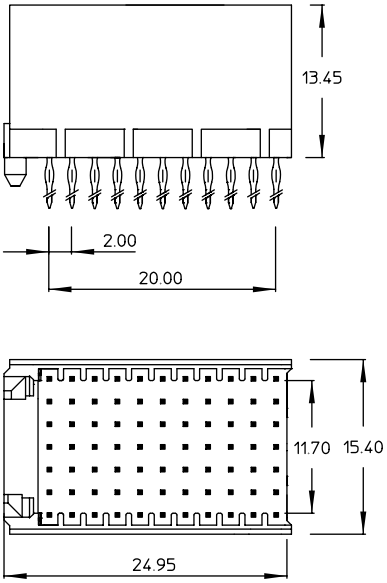

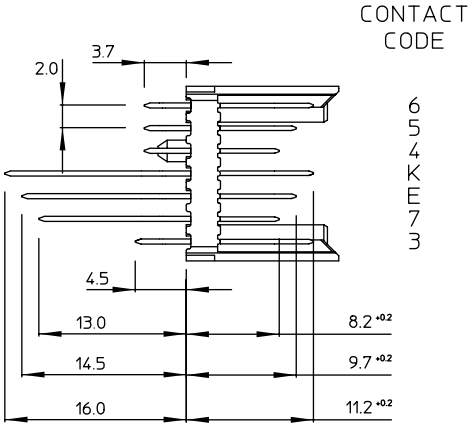

Standard loading patterns (seen from mating side)

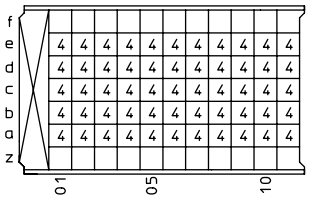

HM2P80PD5110N9

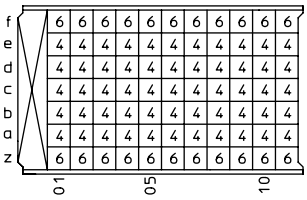

HM2P80PD5111N9

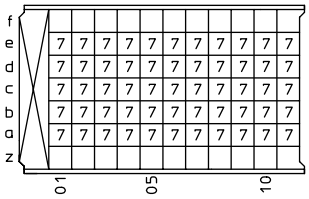

HM2P80PK5110GF

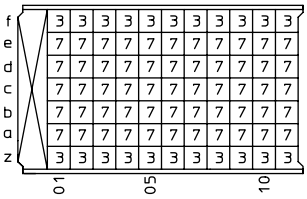

HM2P80PK5111GF

5 Row male hybrid housing for 6 DIN contacts : TYPE L

Description

- 5 Row male housing with 6 special cavities.
- Integrated “MP” center for polarization and coding. (“MP” = multi purpose center)
- 6 x 4.8 mm diameter cavities for coax, power or FO contacts conforming DIN 41626.
- Pre-assembled modules with press-fit power contacts.
- Board lay-out : see page 80.

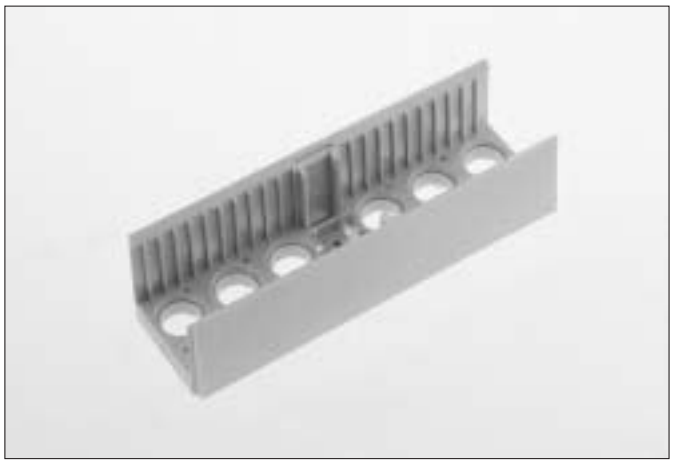

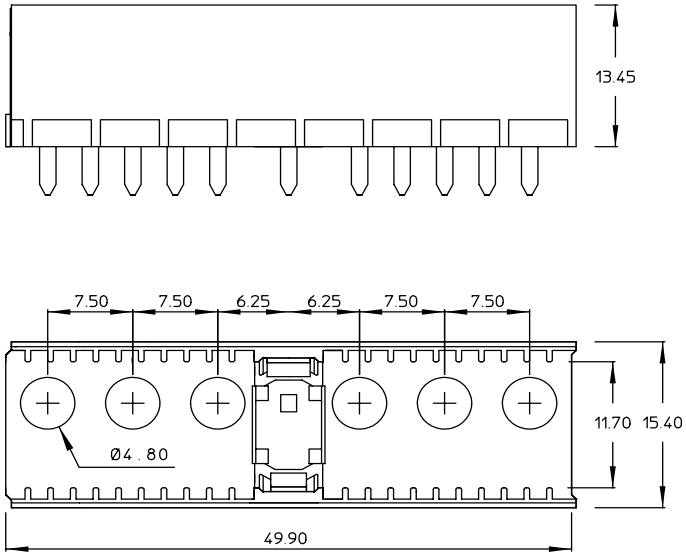

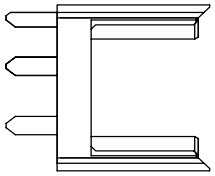

Empty housing :

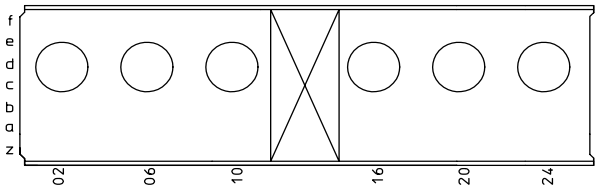

HM2P10P1

Pre-assembled module with press-fit power contacts :

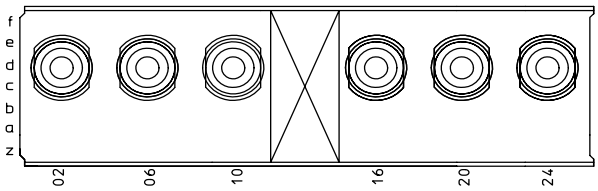

HM2A30PG5000

Millipacs® HM

5+2 Row mixed male signal straight press-fit-to-board connector : TYPE M

Description

- 5 or 5+2 Row male header with 55 signal contacts and 3 hybrid DIN cavities.
- Integrated “MP” center for polarization and coding. (“MP” = multi purpose center)
- Press - fit terminations for signal contacts.
- 3 Mating levels.
- Non - shielded and shielded versions.
- 3 x 4.8 mm diameter cavities for coax, power or FO contacts conforming DIN 41626.
- Pre-assembled modules with press-fit power contacts.
- Customized loading arrangements : see page 5.
- Board lay-out : see page 80.

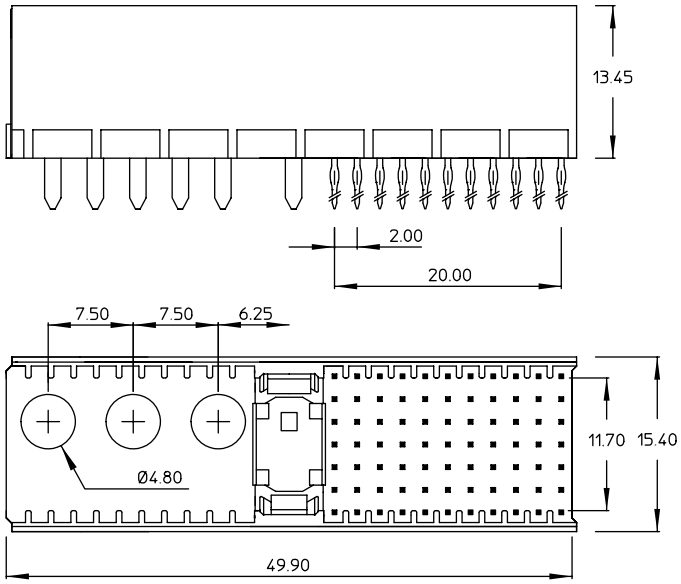

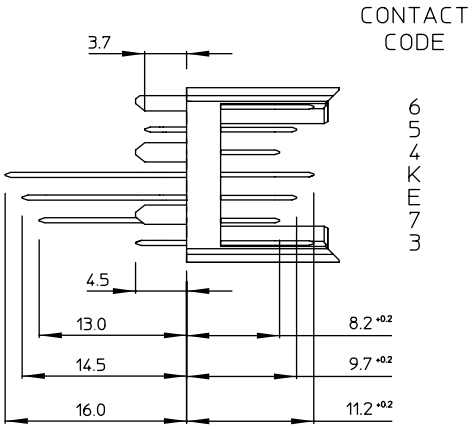

Standard loading patterns (seen from mating side)

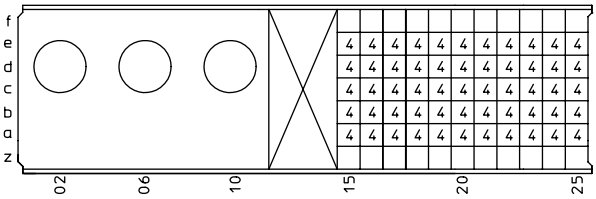

HM2P11PD5110N9

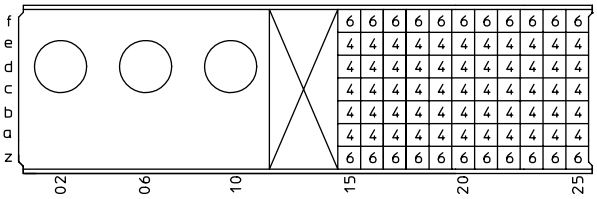

HM2P11PD5111N9

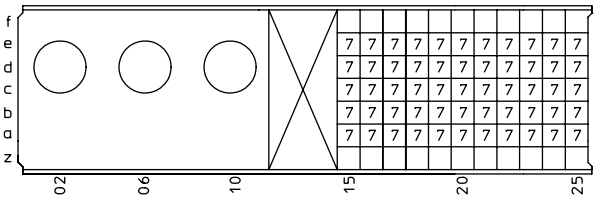

HM2P11PK5110GF

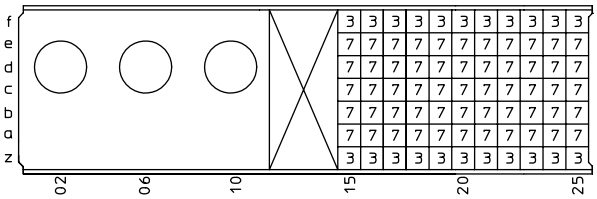

HM2P11PK5111GF

5 Row male hybrid housing for 3 DIN contacts : TYPE N

Description

- 5 Row male housing with 3 special cavities.
- Integrated area for guiding & polarization.
- 3 x 4.8 mm diameter cavities for coax, power or FO contacts conforming DIN 41626.
- Pre-assembled modules with press-fit power contacts.
- Board lay-out : see page 80.

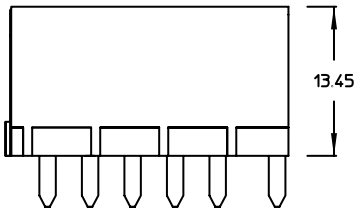

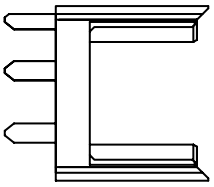

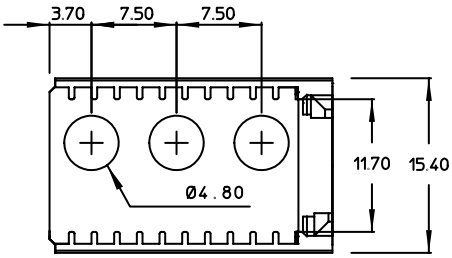

Empty housing :

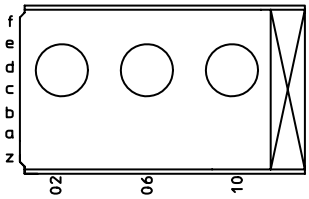

HM2P12P1

Pre-assembled module with press-fit power contacts :

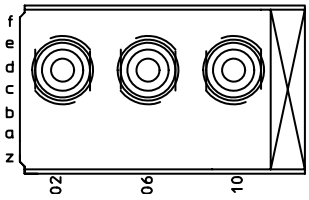

HM2A32PG5000

Millipacs® HM

8+2 Row male signal straight press-fit-to-board connector : TYPE D

Description

- 8 or 8+2 Row male header with 176 signal contacts.
- Integrated “MP” center for polarization, guiding and coding. (“MP” = multi purpose center)
- Additional guiding area, contact pin optional.
- Press - fit terminations.
- 3 Mating levels.
- Non - shielded and shielded versions.
- Customized loading arrangements : see page 5.
- Board lay-out : see page 80.

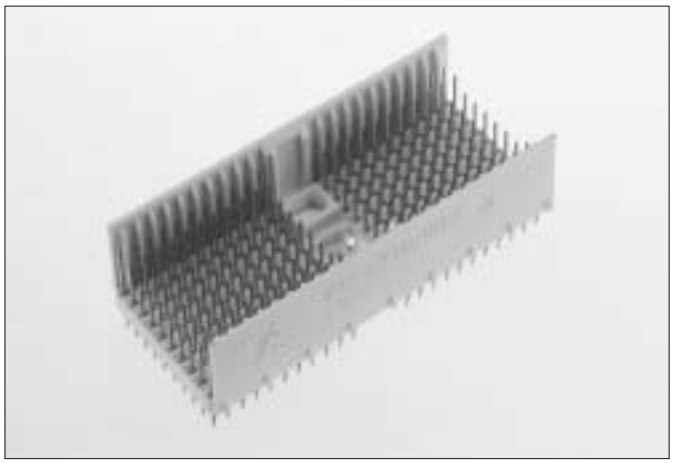

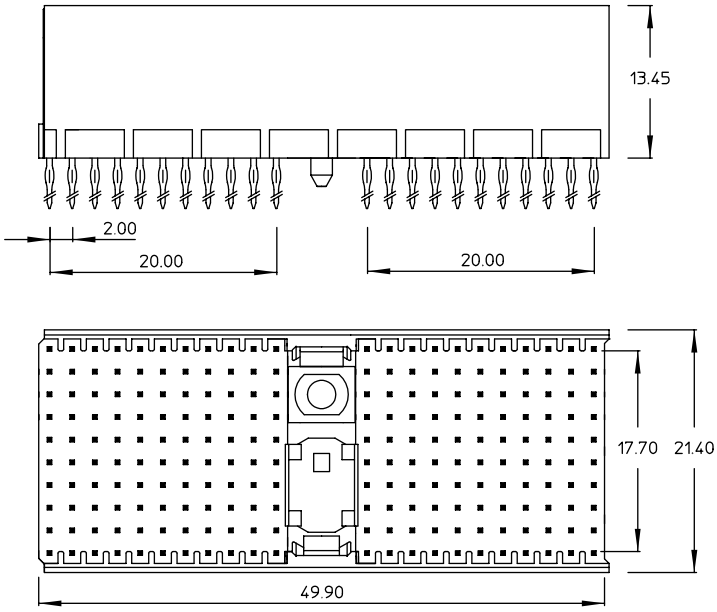

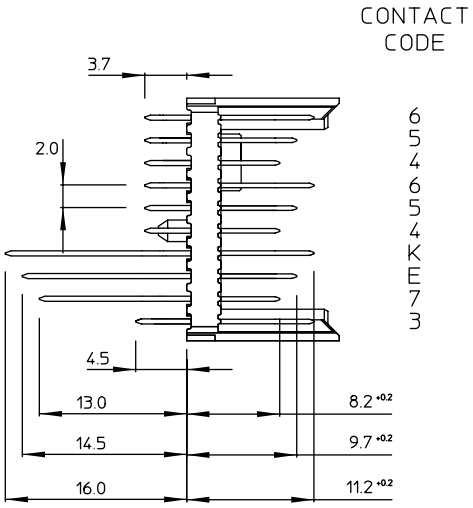

Standard loading patterns (seen from mating side)

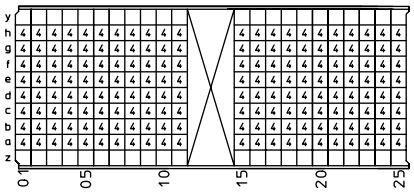

HM2P87PD8110N9

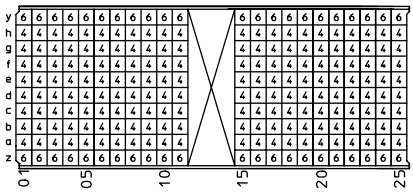

HM2P87PD8111N9

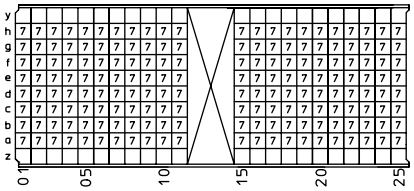

HM2P87PK8110GF

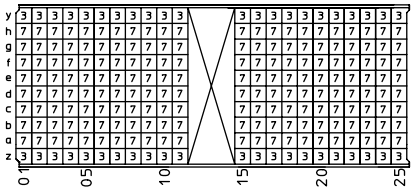

HM2P87PK8111GF

Millipacs® HM

8+2 Row male signal straight press-fit-to-board connector : TYPE E

Description

- 8 or 8+2 Row male header with 200 signal contacts.
- Press - fit terminations.
- 3 Mating levels.
- Non - shielded and shielded versions.
- Customized loading arrangements : see page 5.
- Board lay-out : see page 80.

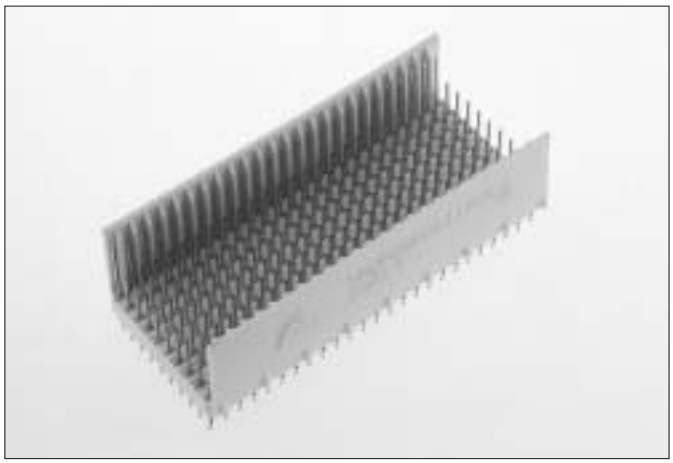

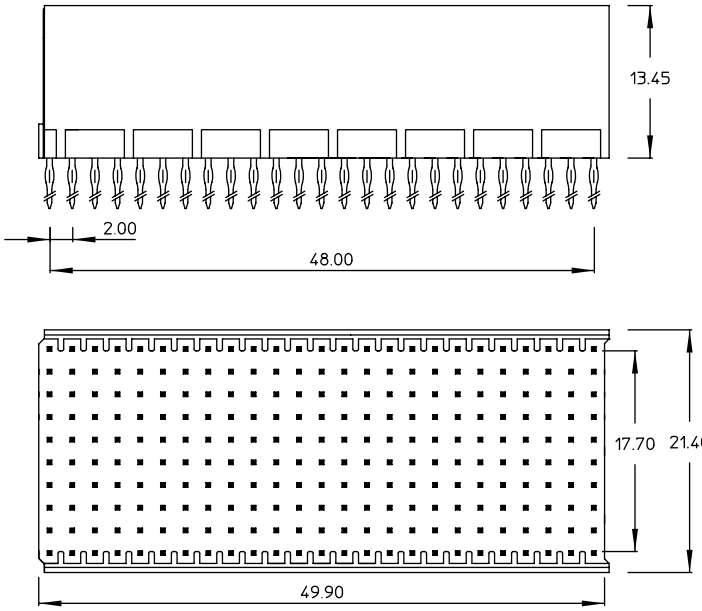

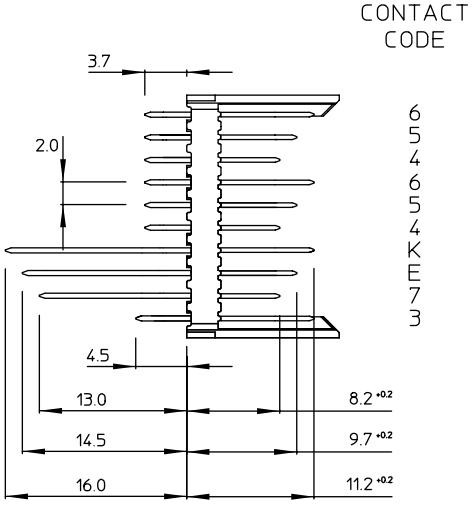

Standard loading patterns (seen from mating side)

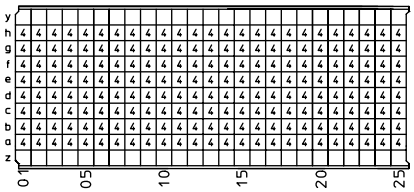

HM2P88PD8110N9

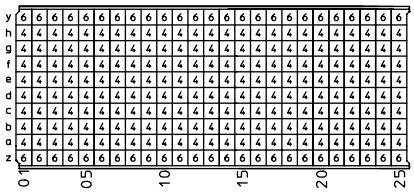

HM2P88PD8111N9

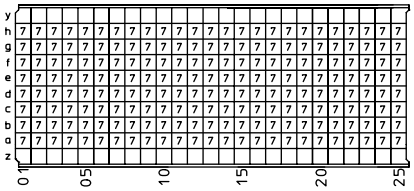

HM2P88PK8110GF

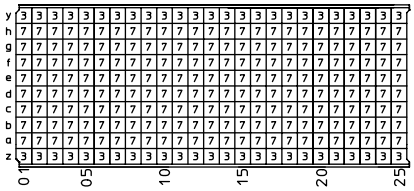

HM2P88PK8111GF

Millipacs® HM

8+2 Row male signal straight press-fit-to-board connector : TYPE DE

Description

- 8 or 8+2 Row male header with 200 signal contacts.
- Integrated polarization and guiding area without loss of signal contact position
- Press - fit terminations.
- 3 Mating levels.
- Non - shielded and shielded versions.
- Customized loading arrangements : see page 5.
- Board lay-out : see page 80.

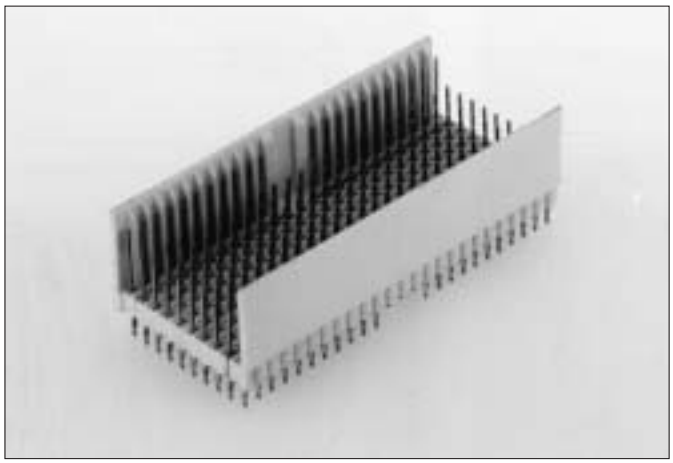

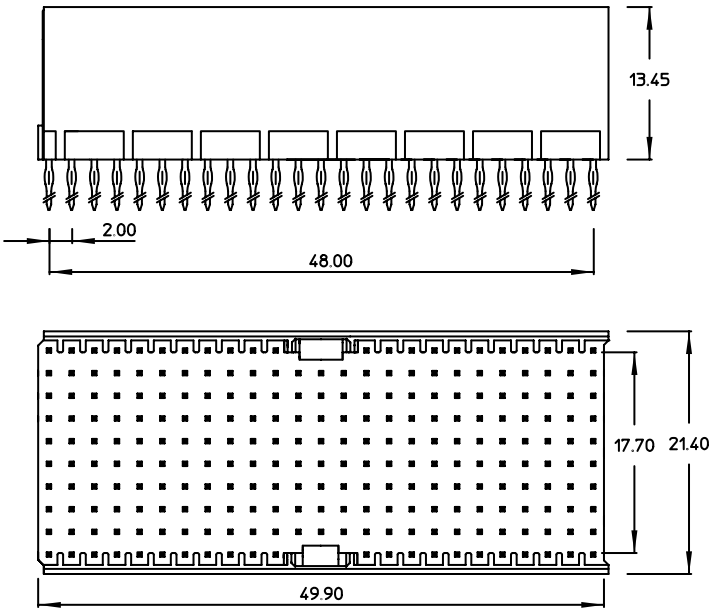

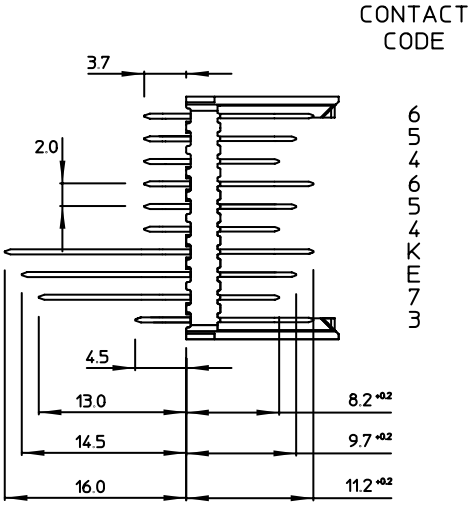

Standard loading pattern (seen from mating side)

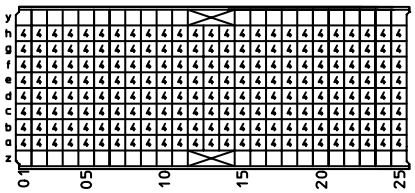

HM2P95PD8110N9

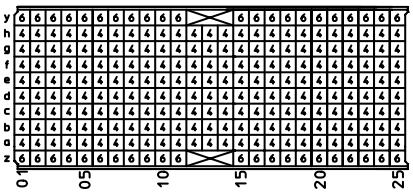

HM2P95PD8111N9

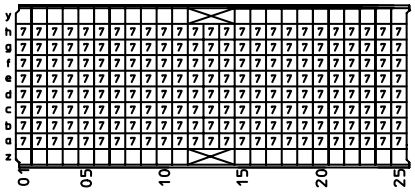

HM2P95PK8110GF

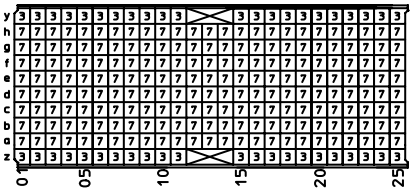

HM2P95PK8111GF

Millipacs® HM

8+2 Row male signal straight press-fit-to-board connector : TYPE F

Description

- 8 or 8+2 Row male header with 88 signal contacts.
- Integrated area for guiding & polarization.
- Press - fit terminations.
- 3 Mating levels.
- Non - shielded and shielded versions.
- Customized loading arrangements : see page 5.
- Board lay-out : see page 80.

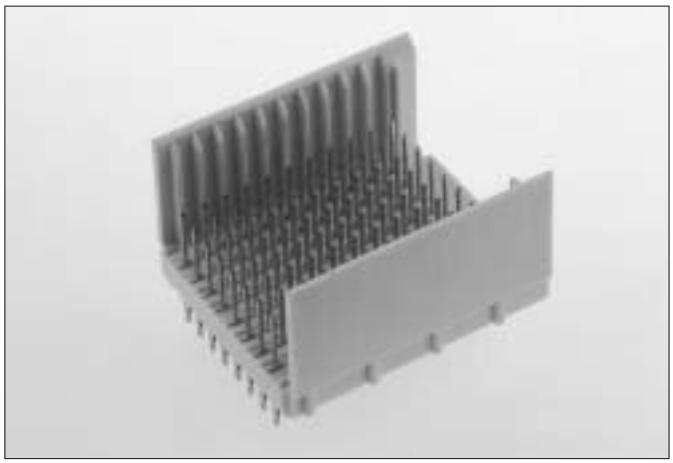

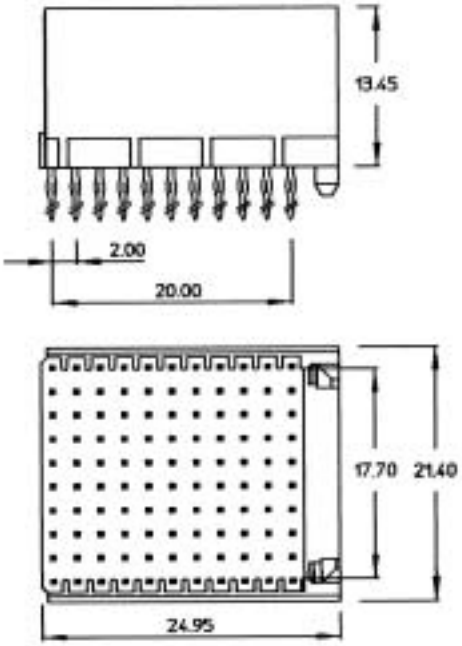

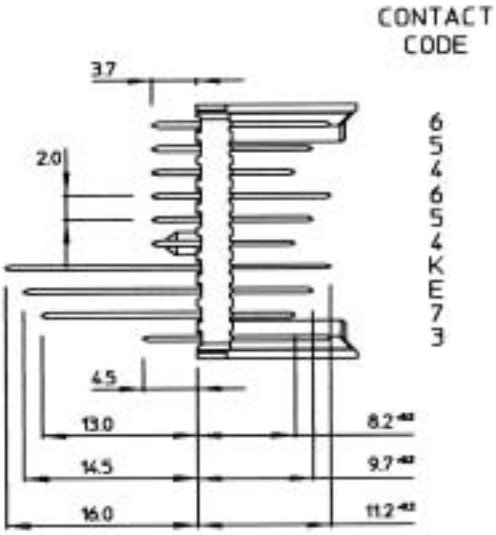

Standard loading patterns (seen from mating side)

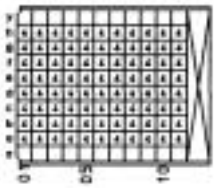

HM2P89PD8110N9

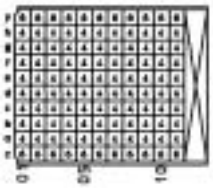

HM2P89PD8111N9

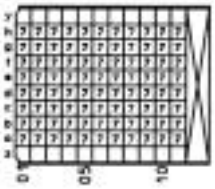

HM2P89PK8110GF

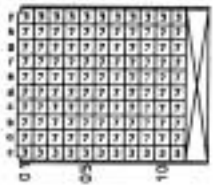

HM2P89PK8111GF

Millipacs® HM

8+2 Row male signal straight press-fit-to-board connector : TYPE FR (F Reversed, FCI terminology)

Description

- 8 or 8+2 Row male header with 88 signal contacts.
- Integrated area for guiding & polarization.
- Press - fit terminations.
- 3 Mating levels.
- Non - shielded and shielded versions.
- Customized loading arrangements : see page 5.
- Board lay-out : see page 80.

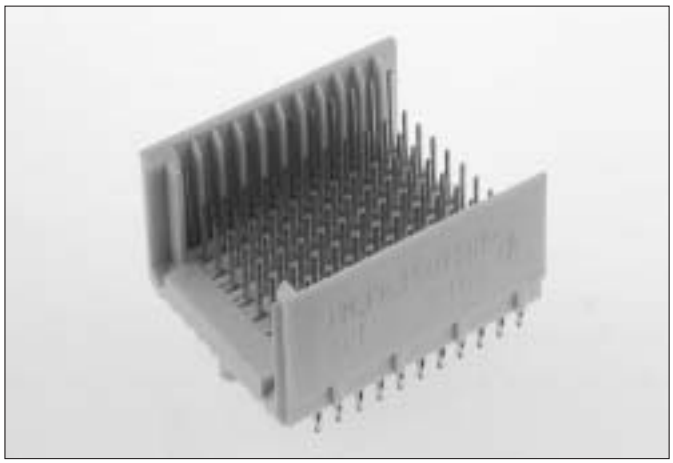

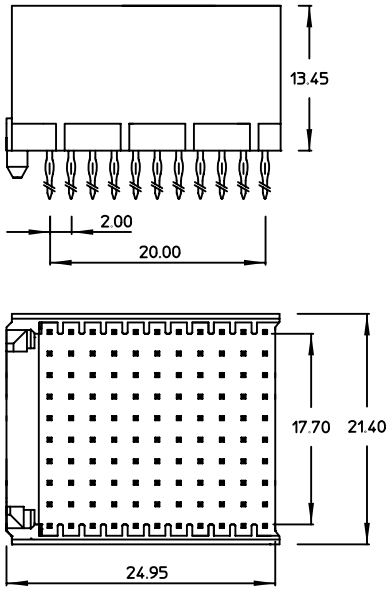

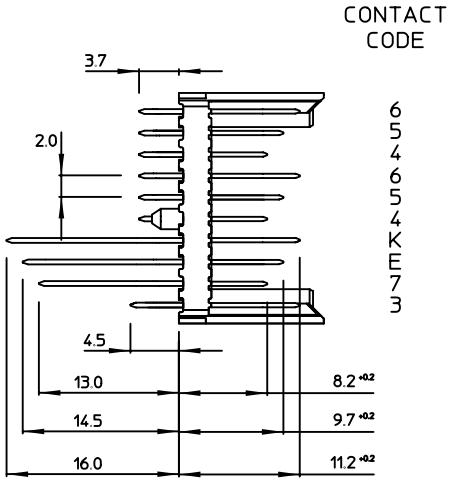

Standard loading patterns (seen from mating side)

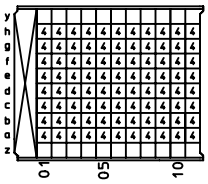

HM2P82PD8110N9

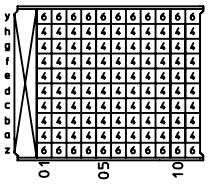

HM2P82PD8111N9

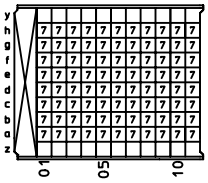

HM2P82PK8110GF

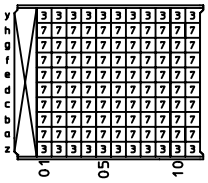

HM2P82PK8111GF

Millipacs® HM

5+2 Row female signal right angle press-fit-to-board connector : TYPE A

Description

- 5 or 5+2 Row female right angle connector with 110 signal contacts.
- Integrated “MP” center for polarization and coding. (“MP” = multi purpose center)
- Press - fit terminations.
- Non - shielded and shielded versions.
- Customized loading arrangements on request.
- Additional lower shield : see page 47.
- Board lay-out : see page 80.
- Module also used in CompactPCI; see CompactPCI catalog.

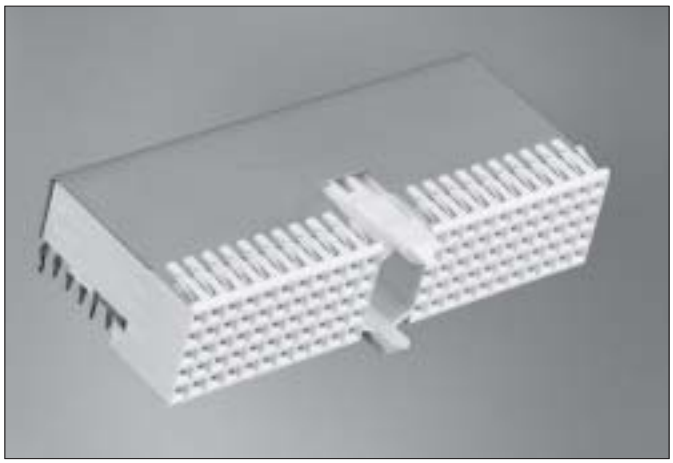

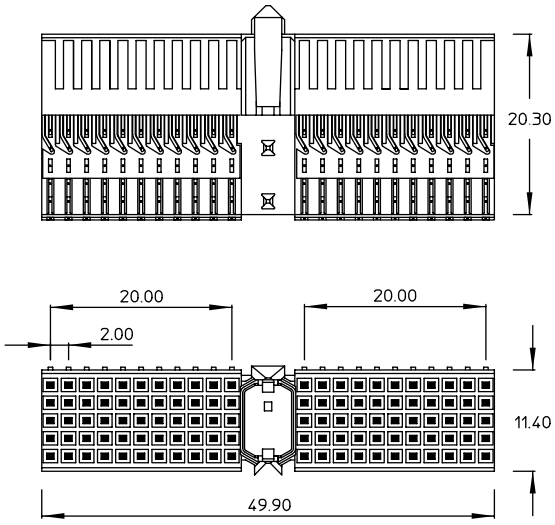

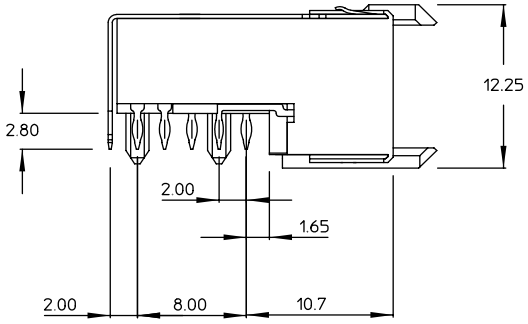

Standard product offer with location pegs :

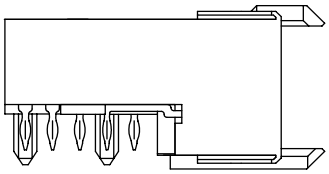

HM2R01PA5100N9
(non shielded)

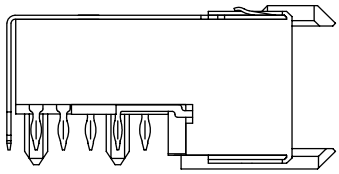

HM2R01PA5108N9
(top shielded only, 4 mm pitch)

Standard product offer without location pegs :

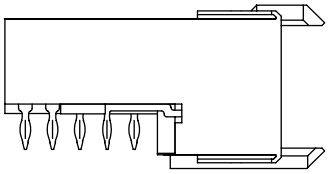

HM2R10PA5100N9
(non shielded)

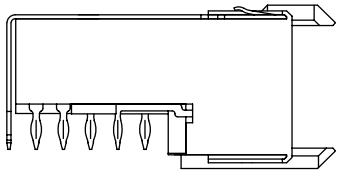

HM2R10PA5108N9
(top shielded only, 4 mm pitch)

Millipacs® HM

5+2 Row female signal right angle press-fit-to-board connector : TYPE B

Description

- 5 or 5+2 Row female right angle connector with 125 signal contacts.
- Press - fit terminations.
- Non - shielded and shielded versions.
- Customized loading arrangements on request.
- Additional lower shield : see page 47.
- Board lay-out : see page 80.

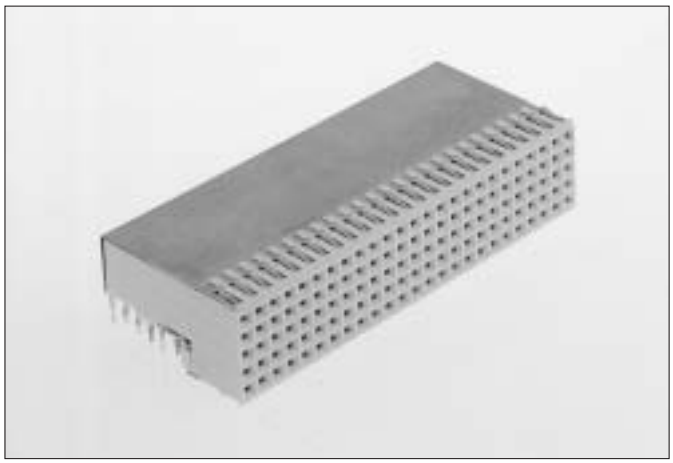

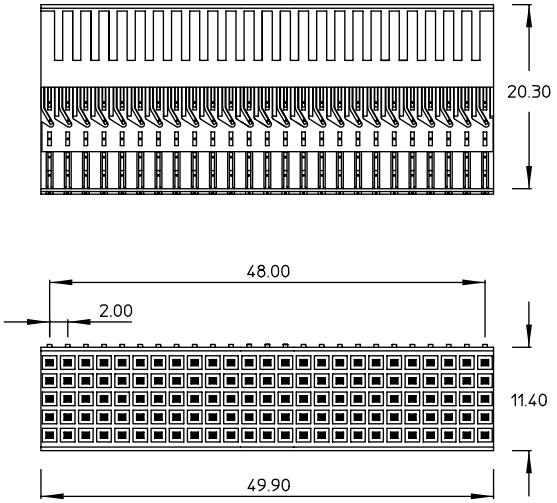

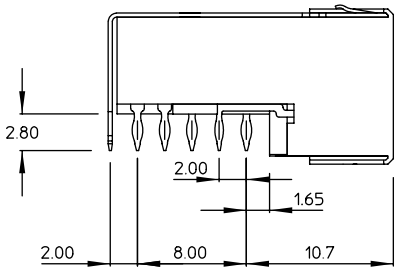

Standard product offer :

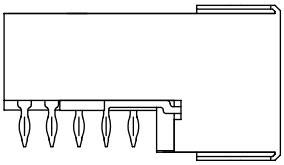

HM2R02PA5100N9
(non shielded)

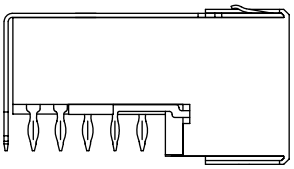

HM2R02PA5108N9
(top shielded only, 4 mm pitch)

Millipacs® HM

5+2 Row female signal right angle press-fit-to-board connector : TYPE B22

Description

- 5 or 5+2 Row female right angle connector with 110 signal contacts.
- Press - fit terminations.
- Non - shielded and shielded versions.
- Customized loading arrangements on request.
- Additional lower shield : see page 47.
- Board lay-out : see page 80.
- Module also used in CompactPCI; see CompactPCI catalog.

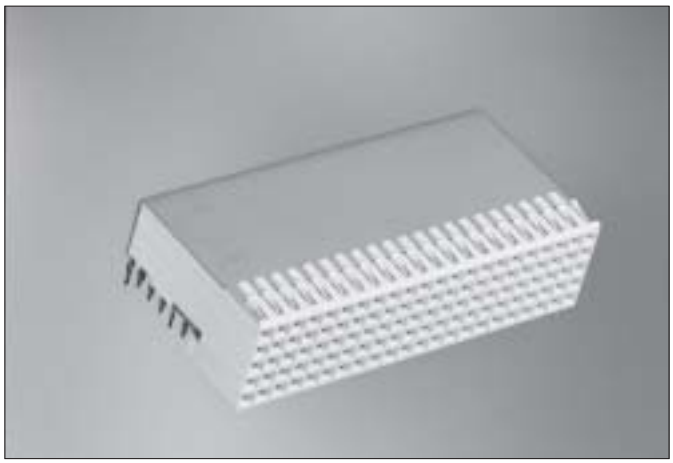

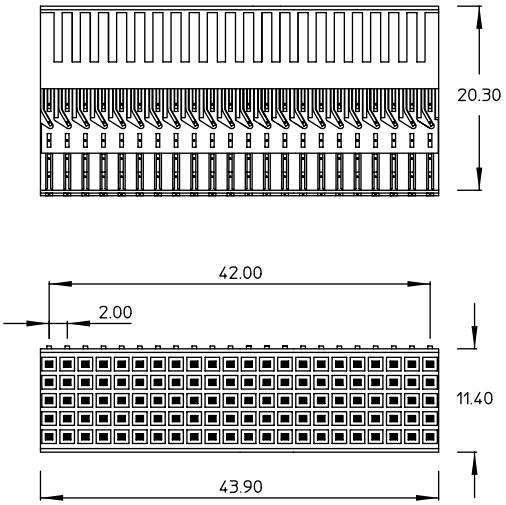

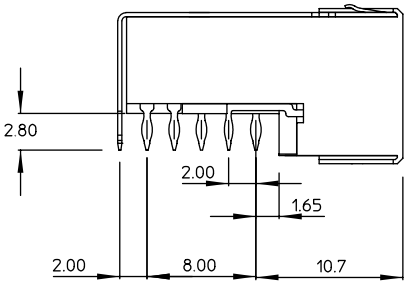

Standard product offer :

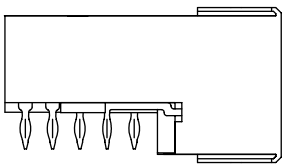

HM2R70PA5100N9
(non shielded)

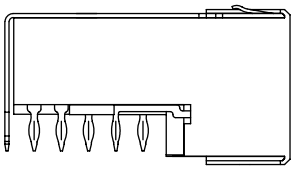

HM2R70PA5108N9
(top shielded only, 4 mm pitch)

Millipacs® HM

5+2 Row female signal right angle press-fit-to-board connector : TYPE B19

Description

- 5 or 5+2 Row female right angle connector with 95 signal contacts.
- Press - fit terminations.
- Non - shielded and shielded versions.
- Customized loading arrangements on request.
- Additional lower shield : see page 47.
- Board lay-out : see page 80.
- Module also used in CompactPCI; see CompactPCI catalog.

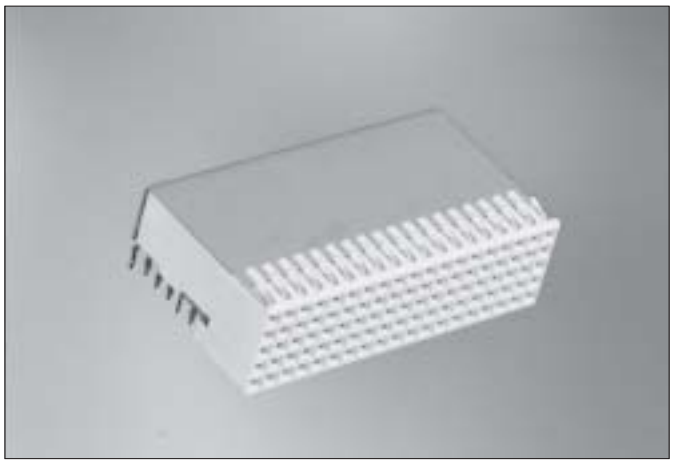

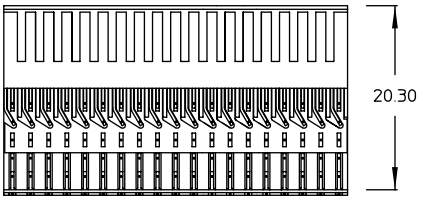

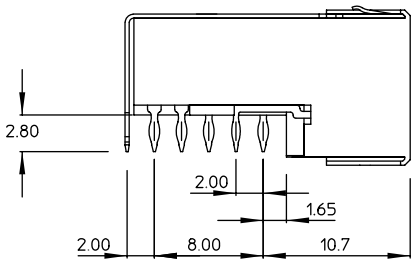

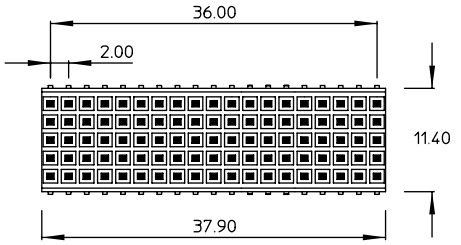

Standard product offer :

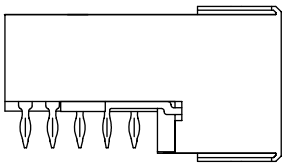

HM2R71PA5100N9
(non shielded)

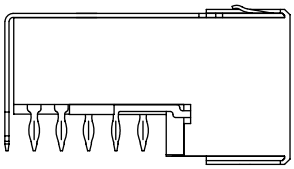

HM2R71PA5108N9
(top shielded only, 4 mm pitch)

Millipacs® HM

5+2 Row female signal right angle press-fit-to-board connector : TYPE AB

Description

- 5 or 5+2 Row female right angle connector with 125 signal contacts.
- Integrated polarization and guiding center without loss of signal contact positions.
- Press - fit terminations.
- Non - shielded and shielded versions.
- Customized loading arrangements on request.
- Additional lower shield : see page 47.
- Board lay-out : see page 80.

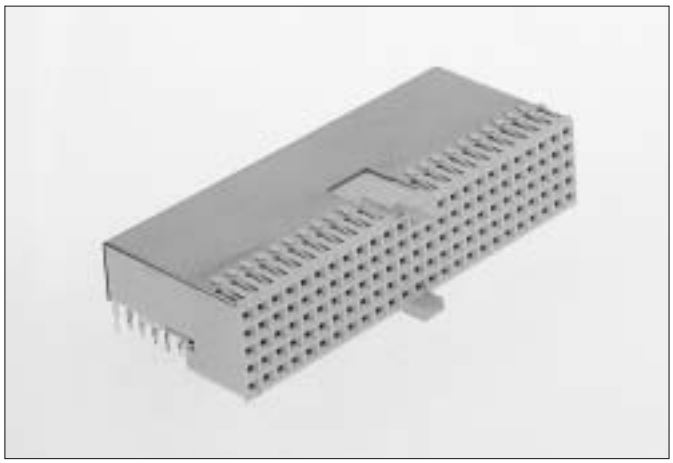

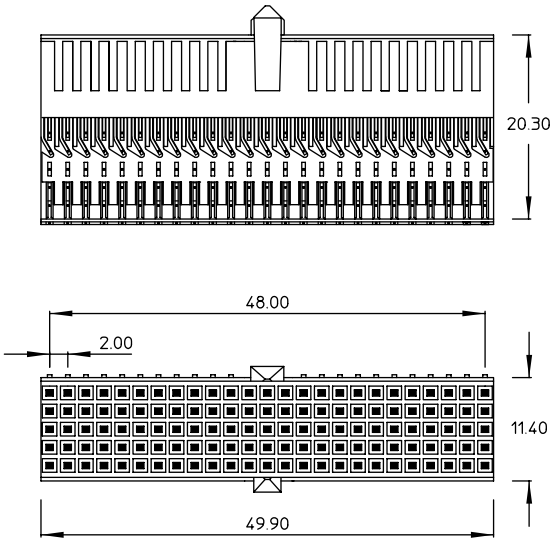

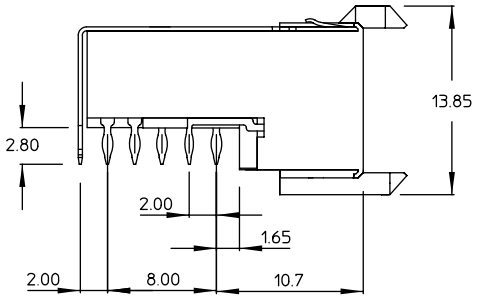

Standard product offer :

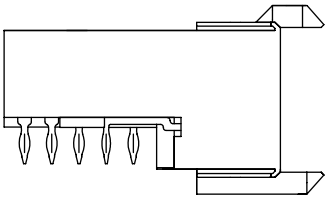

HM2R65PA5100N9
(non shielded)

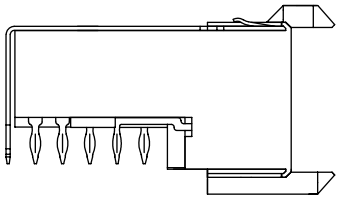

HM2R65PA5108N9
(top shielded only, 4 mm pitch)

Millipacs® HM

5+2 Row female signal right angle press-fit-to-board connector : TYPE AB22

Description

- 5 or 5+2 Row female right angle connector with 110 signal contacts.
- Integrated polarization and guiding center without loss of signal contact positions.
- Press - fit terminations.
- Non - shielded and shielded versions.
- Customized loading arrangements on request.
- Additional lower shield : see page 47.
- Board lay-out : see page 80.
- Module also used in CompactPCI; see CompactPCI catalog.

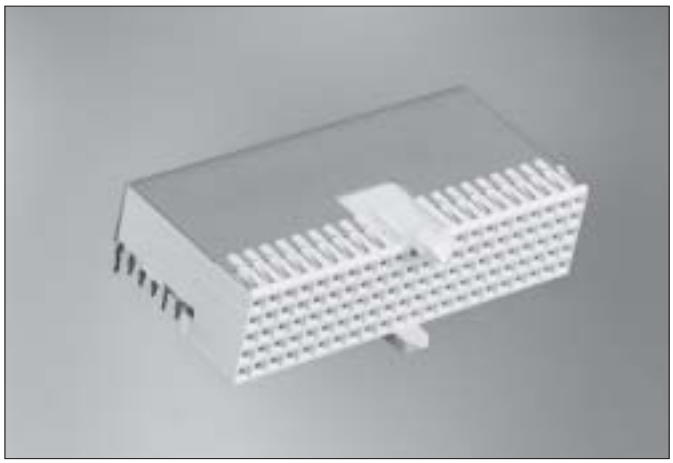

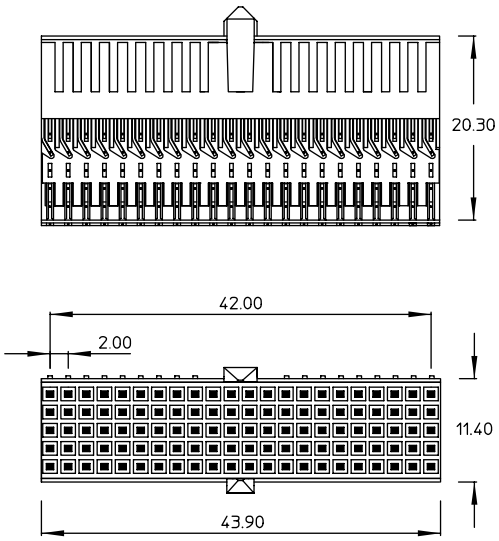

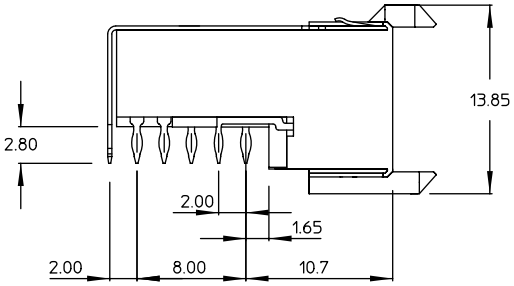

Standard product offer :

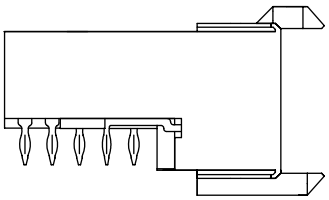

HM2R66PA5100N9
(non shielded)

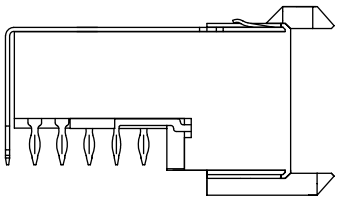

HM2R66PA5108N9
(top shielded only, 4 mm pitch)

Millipacs® HM

5+2 Row female signal right angle press-fit-to-board connector : TYPE AB19

Description

- 5 or 5+2 Row female right angle connector with 95 signal contacts.
- Integrated polarization and guiding center without loss of signal contact positions.
- Press - fit terminations.
- Non - shielded and shielded versions.
- Customized loading arrangements on request.
- Additional lower shield : see page 47.
- Board lay-out : see page 80.
- Module also used in CompactPCI; see CompactPCI catalog.

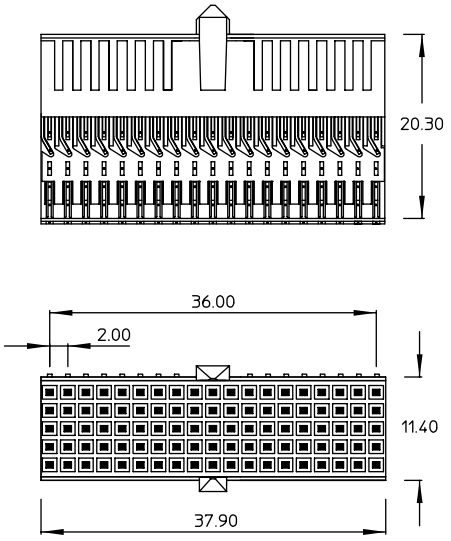

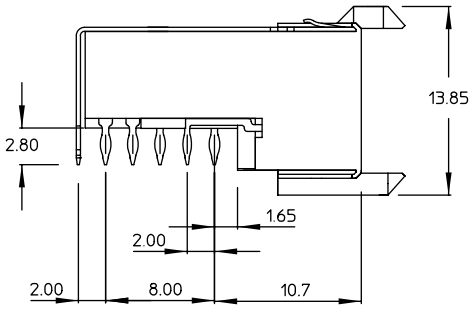

Standard product offer :

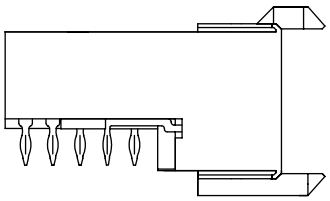

HM2R67PA5100N9
(non shielded)

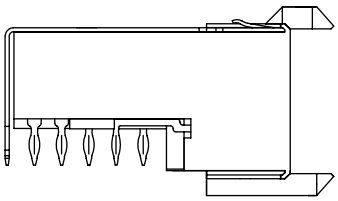

HM2R67PA5108N9
(top shielded only, 4 mm pitch)

Millipacs® HM

5+2 Row female signal right angle press-fit-to-board connector : TYPE C

Description

- 5 or 5+2 Row female right angle connector with 55 signal contacts.
- Integrated pegs for guiding & polarization.
- Press - fit terminations.
- Non - shielded and shielded versions.
- Customized loading arrangements on request.
- Additional lower shield : see page 47.
- Board lay-out : see page 80.

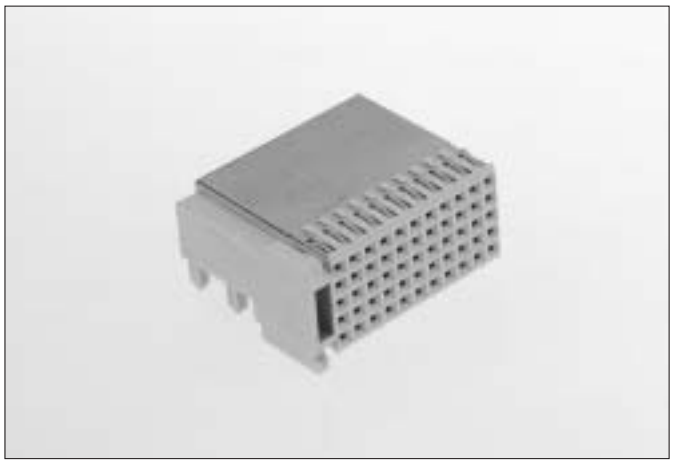

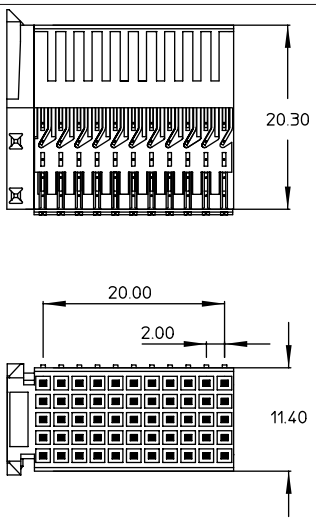

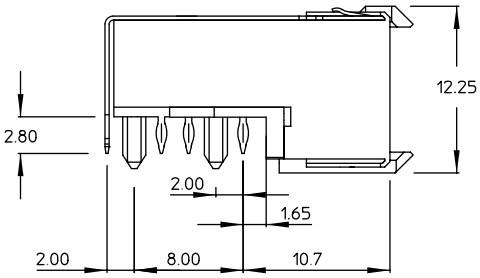

Standard product offer : with location pegs

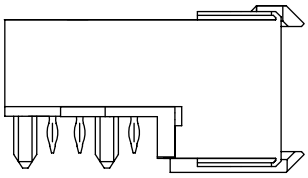

HM2R03PA5100N9
(non shielded)

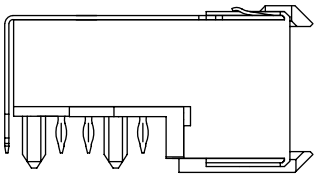

HM2R03PA5108N9
(top shielded only, 4 mm pitch)

Standard product offer : without location pegs

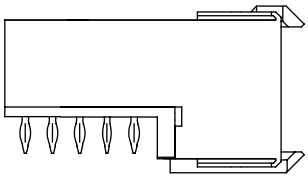

HM2R30PA5100N9
(non shielded)

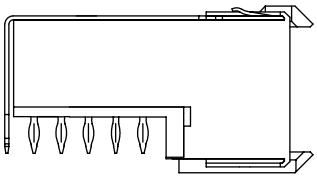

HM2R30PA5108N9
(top shielded only, 4 mm pitch)

5+2 Row female signal right angle press-fit-to-board connector : TYPE CR (C Reversed, FCI terminology)

Description

- 5 or 5+2 Row female right angle connector with 55 signal contacts.
- Integrated pegs for guiding & polarization.
- Press - fit terminations.
- Non - shielded and shielded versions.
- Customized loading arrangements on request.
- Additional lower shield : see page 47.
- Board lay-out : see page 80.

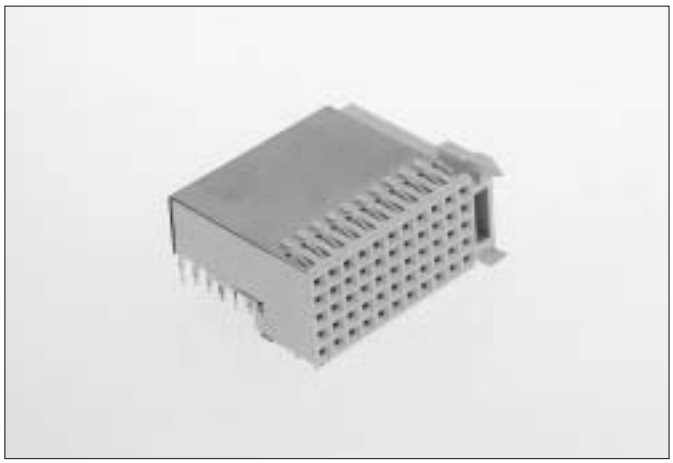

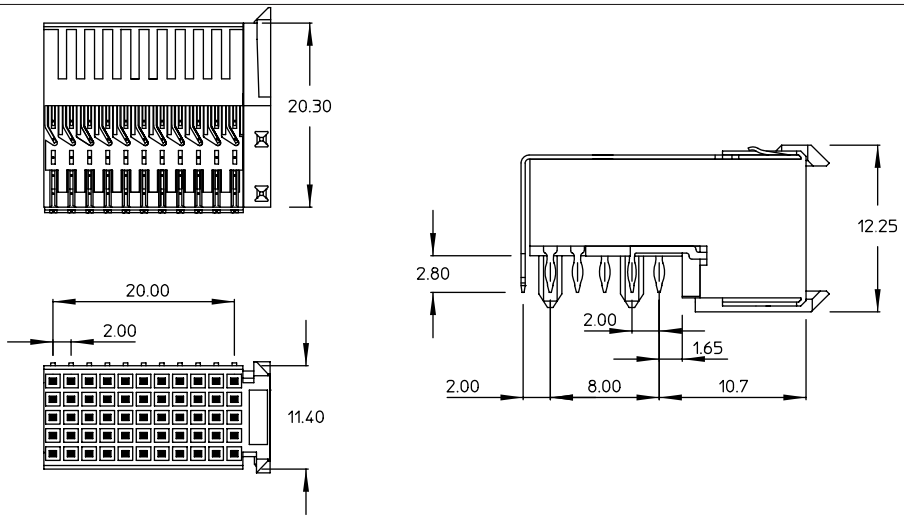

Standard product offer : with location pegs

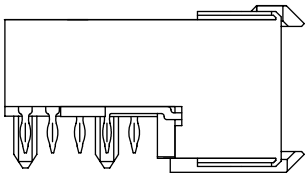

HM2R20PA5100N9
(non shielded)

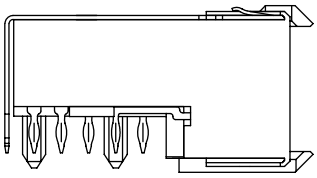

HM2R20PA5108N9
(top shielded only, 4 mm pitch)

Standard product offer : without location pegs

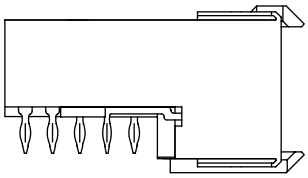

HM2R21PA5100N9
(non shielded)

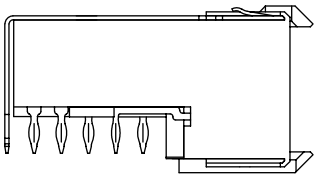

HM2R21PA5108N9
(top shielded only, 4 mm pitch)

Millipacs® HM

5 Row female hybrid right angle housing for 6 DIN contacts : TYPE L

Description

- 5 Row female hybrid right angle housing with 6 special cavities.
- Integrated “MP” center for polarization and coding. (“MP” = multi purpose center)
- 6 x 4.8 mm diameter cavities for coax, power or FO contacts conforming DIN 41626.
- Pre-assembled modules with press-fit power contacts.
- Board lay-out : see page 80.

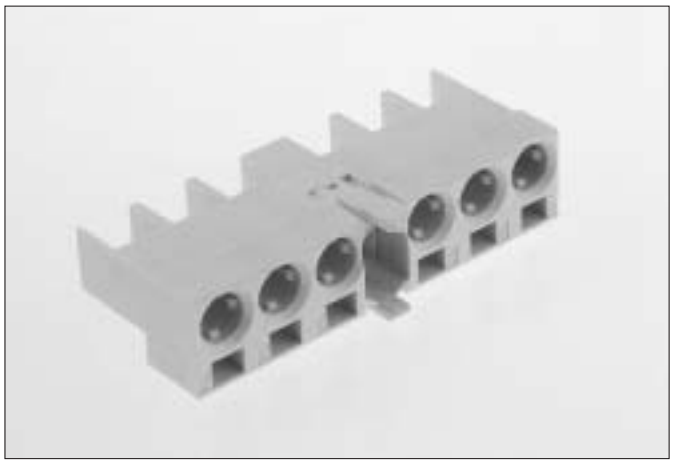

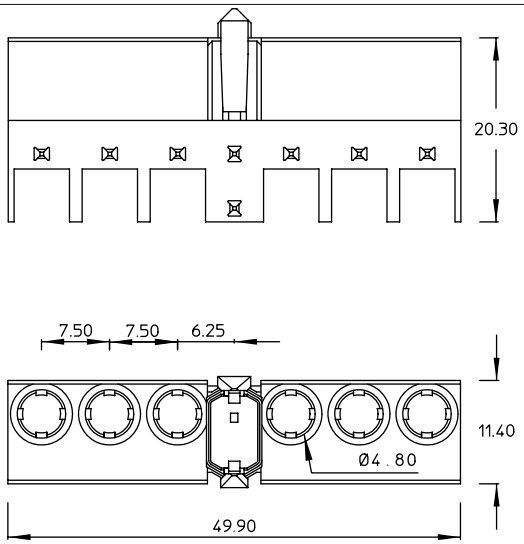

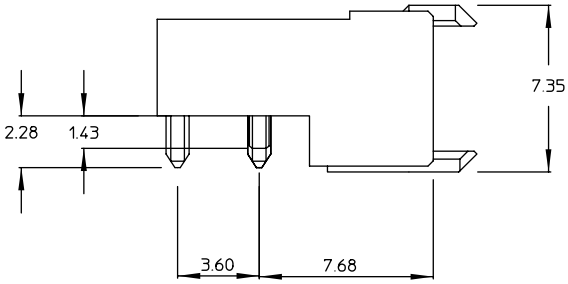

Standard product offer :

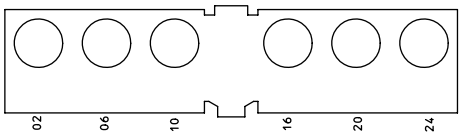

HM2R04P1

Pre-assembled module with press-fit power contacts :

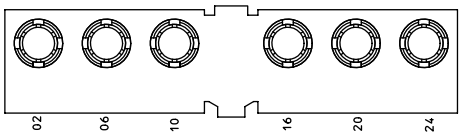

HM2E30PH5000

Millipacs® HM

5+2 Row mixed female signal right angle press-fit-to-board connector : TYPE M

Description

- 5 or 5+2 Row female right angle connector with 55 signal contacts and 3 hybrid DIN cavities.
- Integrated “MP” center for polarization and coding. (“MP” = multi purpose center)
- 3 x 4.8 mm diameter cavities for coax, power or FO contacts conforming DIN 41626.
- Press - fit terminations for signal contacts.
- Non - shielded and shielded versions.
- Pre-assembled modules with power press-fit contacts on request.
- Customized loading arrangements.
- Additional lower shield: see page 47.
- Board lay-out : see page 80.

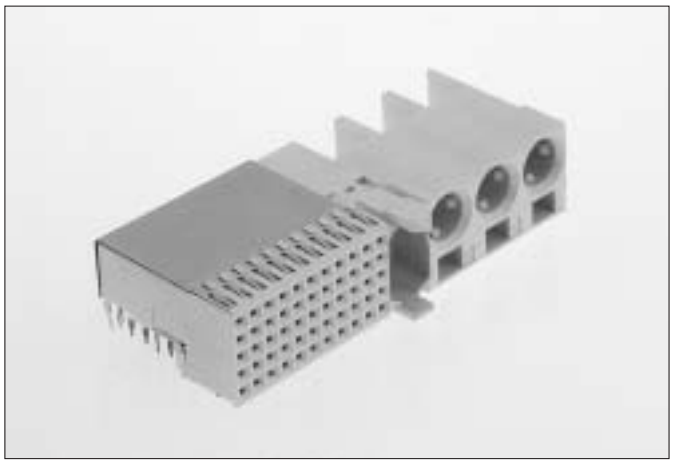

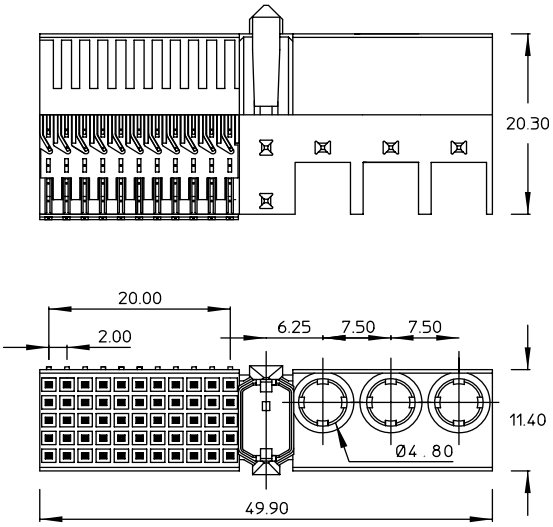

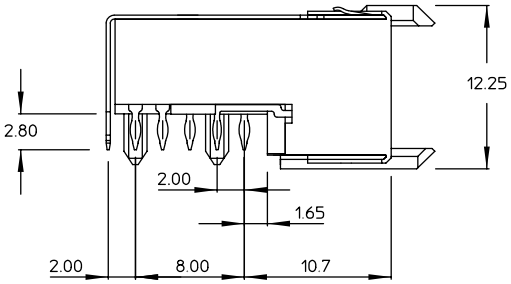

Standard product offer : with location pegs

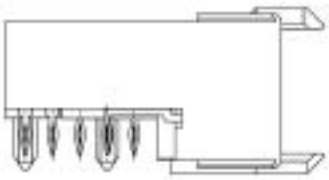

HM2R05PA5100N9
(non shielded)

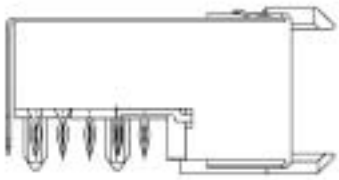

HM2R05PA5108N9
(top shielded only, 4 mm pitch)

Standard product offer : without location pegs

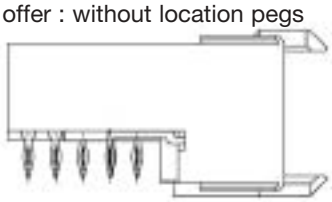

HM2R50PA5100N9
(non shielded)

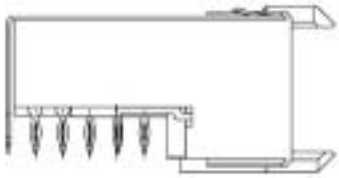

HM2R50PA5108N9
(top shielded only, 4 mm pitch)

Millipacs® HM

5 Row female hybrid right angle housing for 3 DIN contacts : TYPE N

Description

- 5 Row female hybrid right angle housing with 3 special cavities.
- Integrated pegs for guiding & polarization.
- 3 x 4.8 mm diameter cavities for coax, power or FO contacts conforming DIN 41626.
- Pre-assembled modules with press-fit power contacts.
- Board lay-out : see page 80.

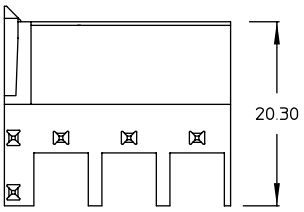

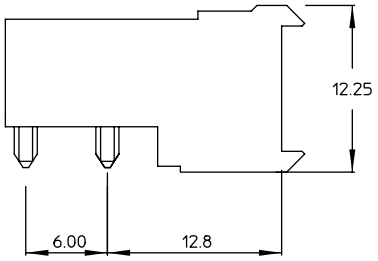

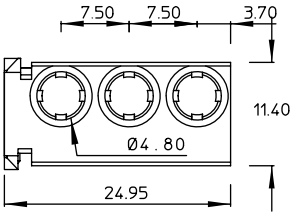

Standard product offer :

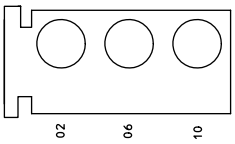

HM2R06P1

Pre-assembled module with press-fit power contacts :

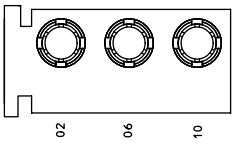

HM2E32PH5000

Millipacs® HM

8+2 Row female signal right angle press-fit-to-board connector : TYPE D

Description

- 8 or 8+2 Row female right angle connector with 176 signal contacts.
- Integrated “MP” center for polarization, guiding and coding. (“MP” = multi purpose center)
- Press - fit terminations.
- Non - shielded and shielded versions.
- Customized loading arrangements on request.
- Additional lower shield : see page 47.
- Board lay-out : see page 80.

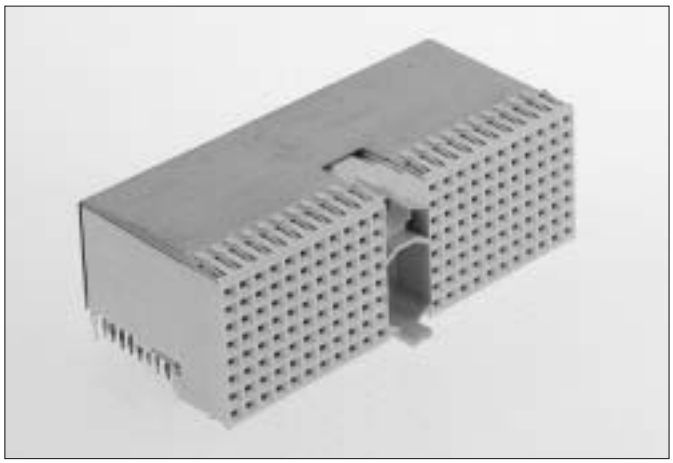

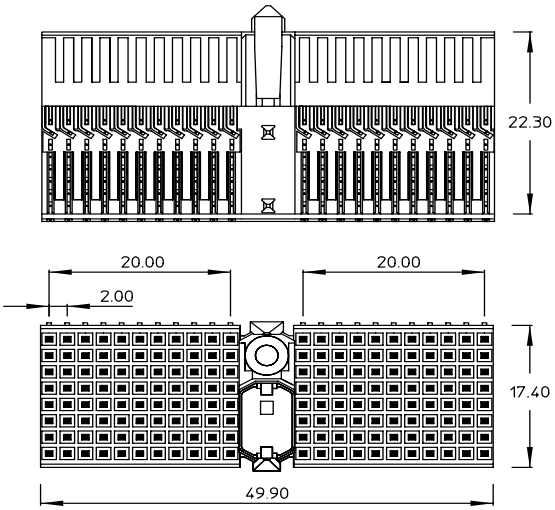

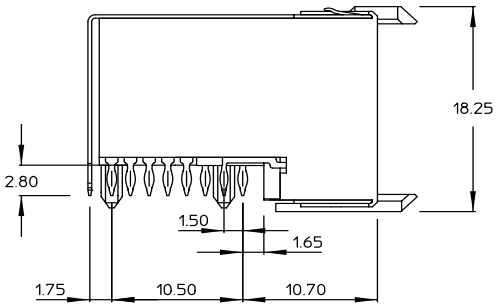

Standard product offer with location pegs :

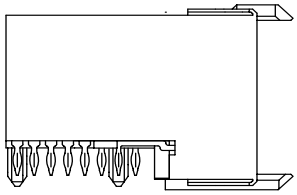

HM2R87PA8100N9
(non shielded)

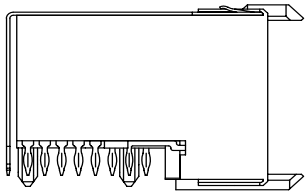

HM2R87PA8108N9
(top shielded only, 4 mm pitch)

Standard product offer without location pegs :

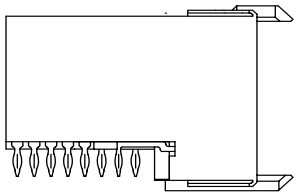

HM2R81PA8100N9
(non shielded)

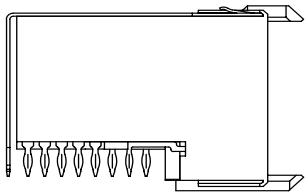

HM2R81PA8108N9
(top shielded only, 4 mm pitch)

Millipacs® HM

8+2 Row female signal right angle press-fit-to-board connector : TYPE E

Description

- 8 or 8+2 Row female right angle connector with 200 signal contacts.
- Press - fit terminations.
- Non - shielded and shielded versions.
- Customized loading arrangements on request.
- Additional lower shield : see page 47.
- Board lay-out : see page 80.

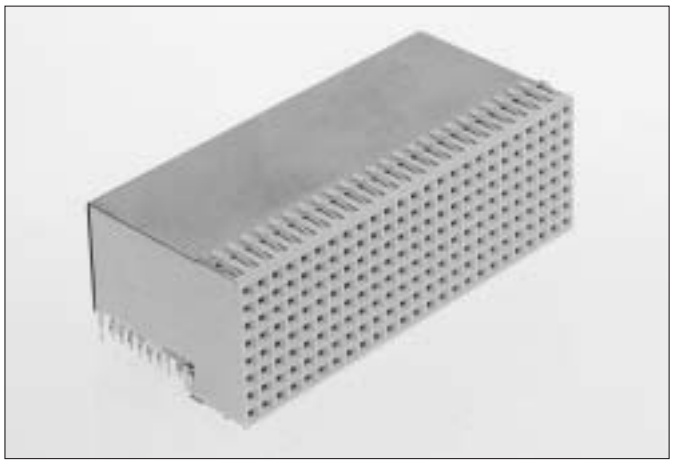

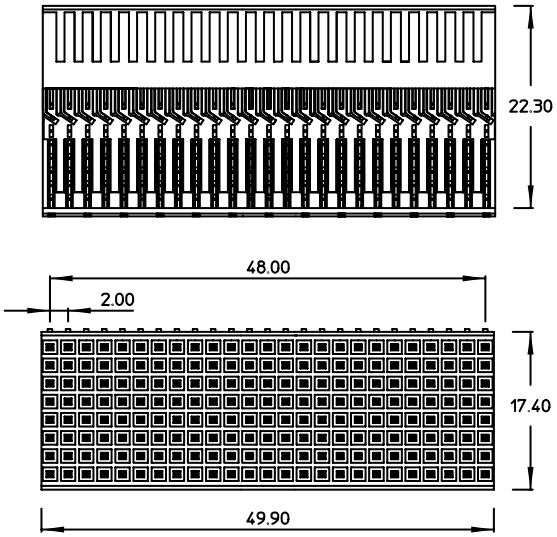

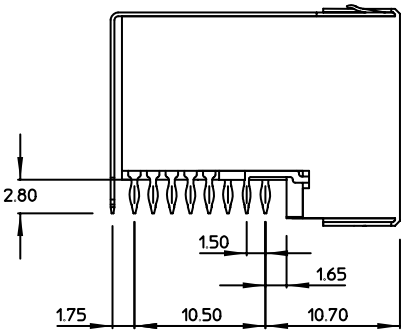

Standard product offer :

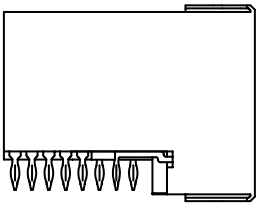

HM2R88PA8100N9
(non shielded)

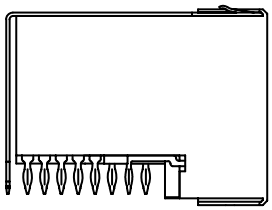

HM2R88PA8108N9
(top shielded only, 4 mm pitch)

Millipacs® HM

8+2 Row female signal right angle press-fit-to-board connector : TYPE DE

Description

- 8 or 8+2 Row female right angle connector with 200 signal contacts.
- Integrated polarization and guiding center without loss of signal contact position.
- Press - fit terminations.
- Non - shielded and shielded versions.
- Customized loading arrangements on request.
- Additional lower shield : see page 47.
- Board lay-out : see page 80.

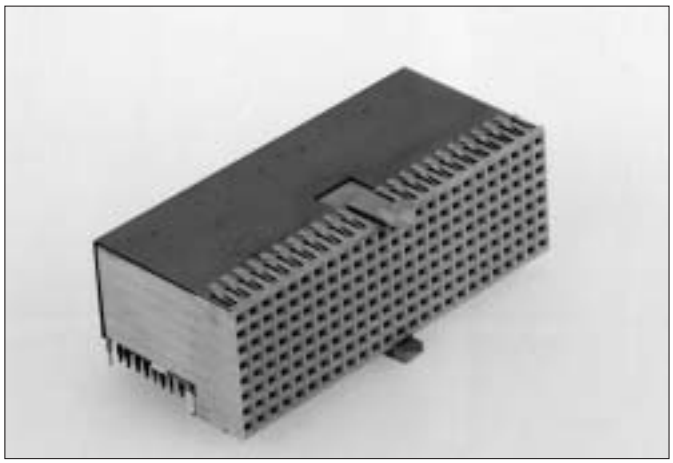

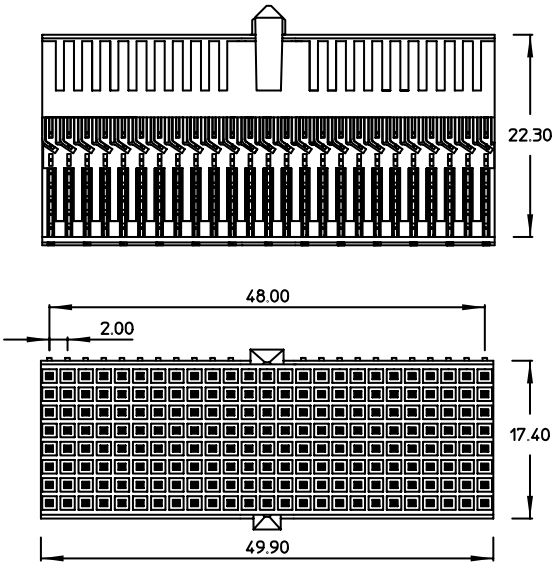

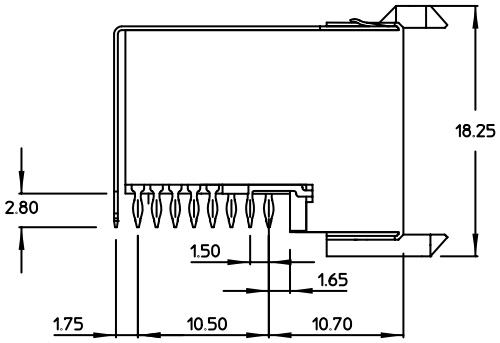

Standard product offer

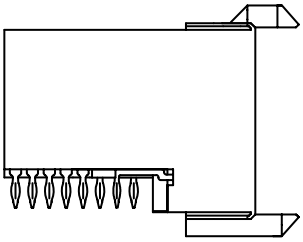

HM2R95PA8100N9
(non shielded)

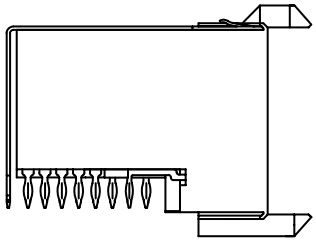

HM2R95PA8108N9
(top shielded only, 4 mm pitch)

Millipacs® HM

8+2 Row female signal right angle press-fit-to-board connector : TYPE F

Description

- 8 or 8+2 Row female right angle connector with 88 signal contacts.
- Integrated pegs for guiding & polarization.
- Press - fit terminations.
- Non - shielded and shielded versions.
- Customized loading arrangements on request.
- Additional lower shield : see page 47.
- Board lay-out : see page 80.

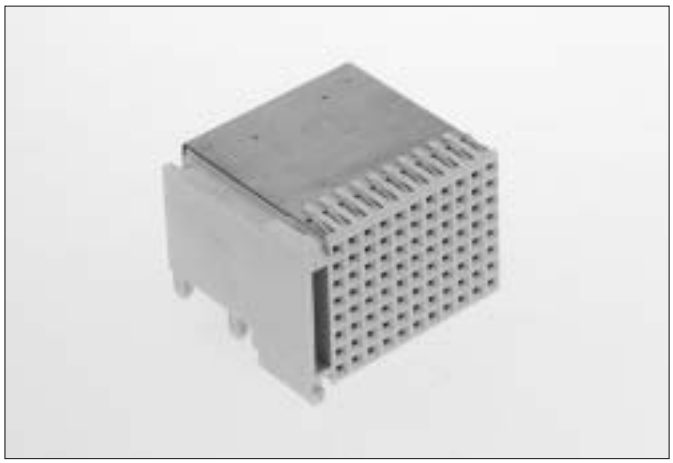

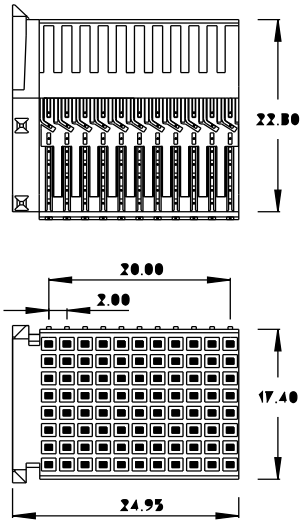

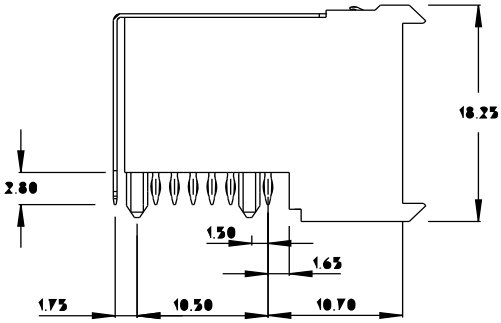

Standard product offer : with location pegs

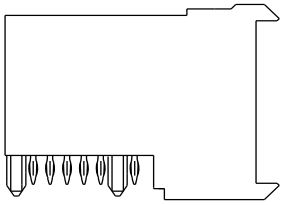

HM2R89PA8100N9
(non shielded)

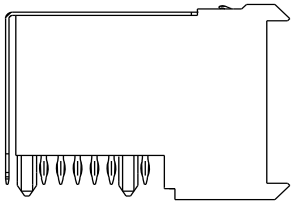

HM2R89PA8108N9
(top shielded only, 4 mm pitch)

Standard product offer : without location pegs

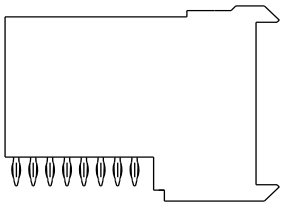

HM2R83PA8100N9
(non shielded)

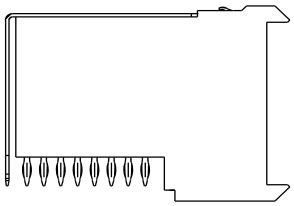

HM2R83PA8108N9
(top shielded only, 4 mm pitch)

Millipacs® HM

8+2 Row female signal right angle press-fit-to-board connector : TYPE FR (F Reversed, FCI terminology)

Description

- 8 or 8+2 Row female right angle connector with 88 signal contacts.
- Integrated pegs for guiding & polarization.
- Press - fit terminations.
- Non - shielded and shielded versions.
- Customized loading arrangements on request.
- Additional lower shield : see page 47.
- Board lay-out : see page 80.

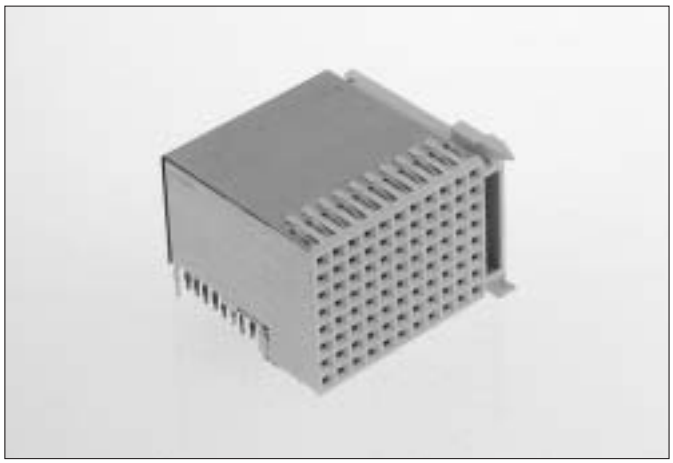

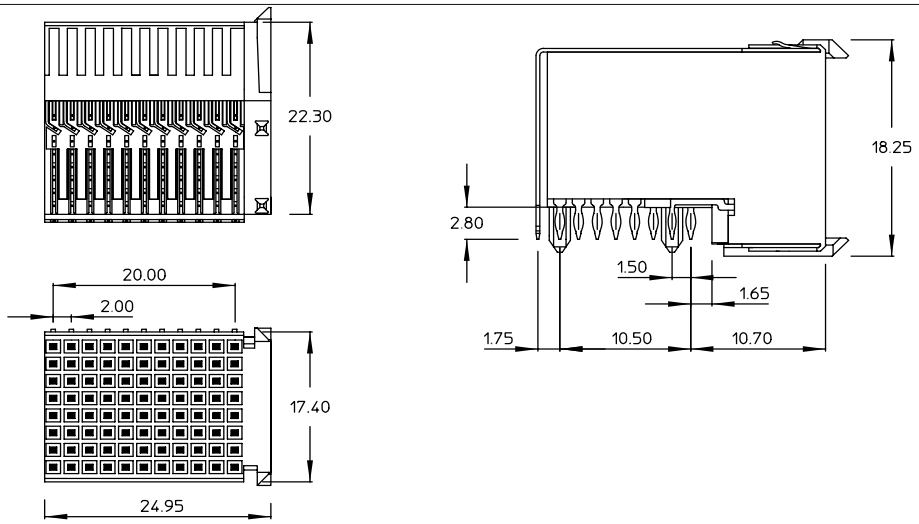

Standard product offer : with location pegs

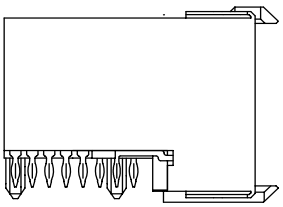

HM2R82PA8100N9
(non shielded)

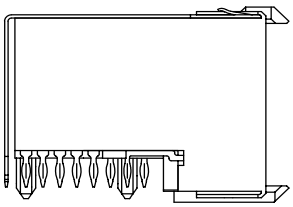

HM2R82PA8108N9
(top shielded only, 4 mm pitch)

Standard product offer : without location pegs

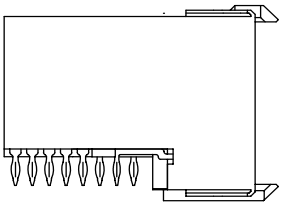

HM2R90PA8100N9
(non shielded)

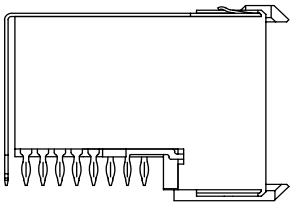

HM2R90PA8108N9
(top shielded only, 4 mm pitch)

Rear lower shield : press-fit versions

Features

- FCI is offering the widest range in Hard Metric shielded connectors.
- Lower shields have to be ordered separately.
- 1-piece press-fit shields.
- Flat rock press-in operation.

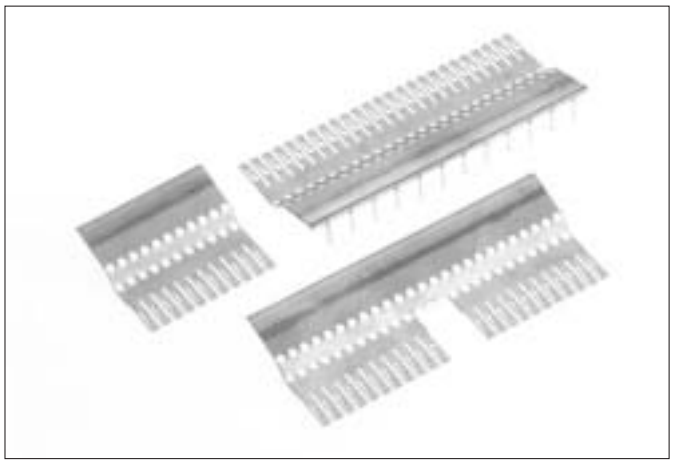

Lower shield ordering information :		
Description	Connector Partnumbers	Lower shield :
Type A	HM2R01PA5108N9	HM2LS22A
	HM2R10PA5108N9	HM2LS22A
Type B	HM2R02PA5108N9	HM2LS25A
Type B22	HM2R70PA5108N9	HM2LS70A
Type B19	HM2R71PA5108N9	HM2LS71A
Type AB	HM2R65PA5108N9	HM2LS22A
Type AB22	HM2R66PA5108N9	HM2LS66A
Type AB19	HM2R67PA5108N9	HM2LS67A
Type C	HM2R03PA5108N9	HM2LS11A
	HM2R30PA5108N9	HM2LS11A
Type CR	HM2R20PA5108N9	HM2LS11A
	HM2R21PA5108N9	HM2LS11A
Type M	HM2R05PA5108N9	HM2LS11A
	HM2R50PA5108N9	HM2LS11A
Type D	HM2R87PA8108N9	HM2LS22A8
	HM2R81PA8108N9	HM2LS22A8
Type E	HM2R88PA8108N9	HM2LS25A8
Type DE	HM2R95PA8108N9	HM2LS22A8
Type F	HM2R89PA8108N9	HM2LS11A8
	HM2R83PA8108N9	HM2LS11A8
Type FR	HM2R82PA8108N9	HM2LS11A8
	HM2R90PA8108N9	HM2LS11A8

Pre-assembled top shielded + additional pressed-in lower shield

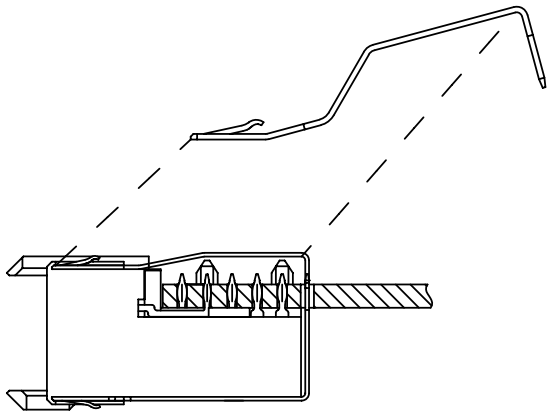

Features

- Pre-assembled top shield with 4.0 mm pitch, odd positioned, short terminations.
- Press-fitted lower shield with 4.0 mm pitch, even positioned, short terminations.
- Press operated.
- PCB thickness range : 1.4 mm – 3.2 mm.

Millipacs® HM

5+2 Row female straight press-fit-to-board connector : TYPE A

Description

- 5 or 5+2 Row female straight connector with 110 signal contacts.
- Integrated “MP” center for polarization and coding. (“MP” = multi purpose center)
- Press - fit terminations.
- Non - shielded and shielded versions.
- Short and rear plug-up terminations.
- Customized loading arrangements on request.
- Board lay-out : see page …

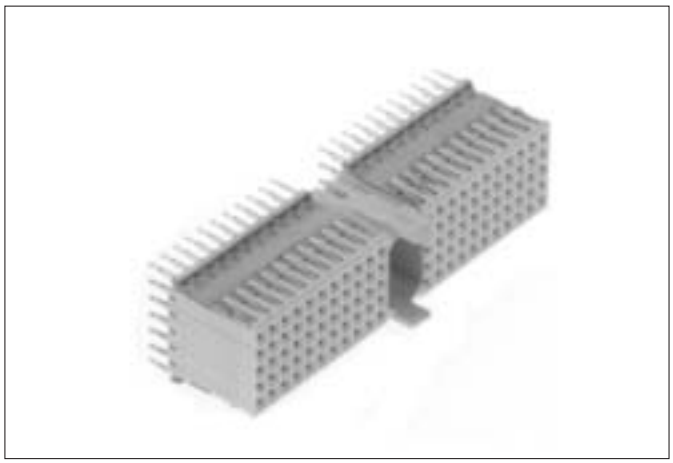

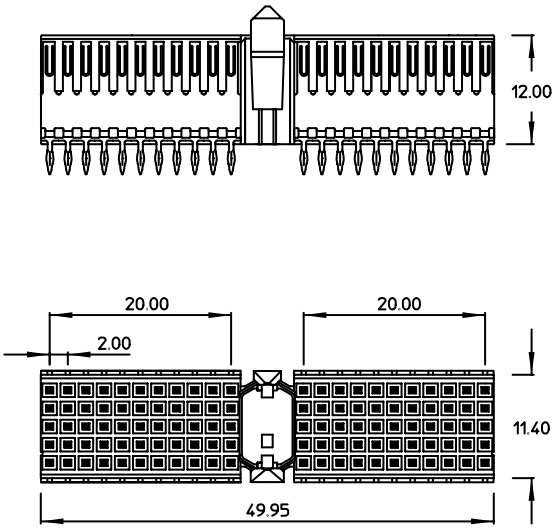

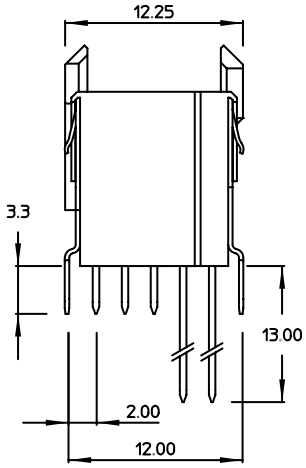

Standard product offer :

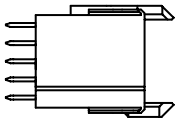

HM2S10PE5100N9
(non shielded)

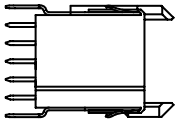

HM2S10PE5101N9
(shielded)

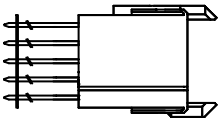

HM2S10PK5100GF
(non shielded)

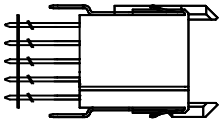

HM2S10PK5101GF
(shielded)

Millipacs® HM

5+2 Row female straight press-fit-to-board connector : TYPE B

Description

- 5 or 5+2 Row female straight connector with 125 signal contacts.
- Press - fit terminations.
- Non - shielded and shielded versions.
- Short and rear plug-up terminations.
- Customized loading arrangements on request.
- Board lay-out : see page 80.

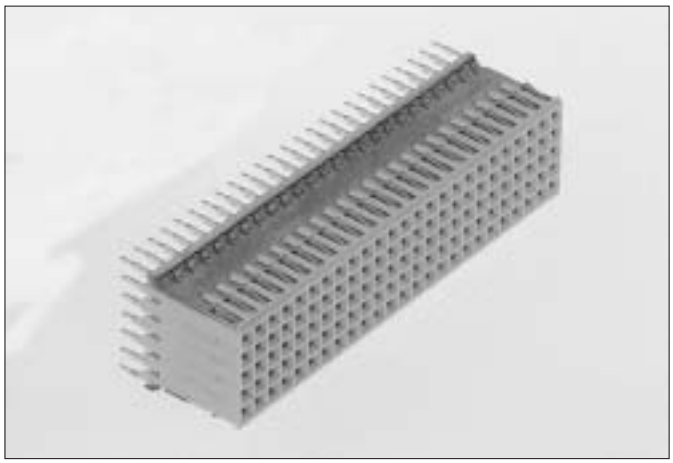

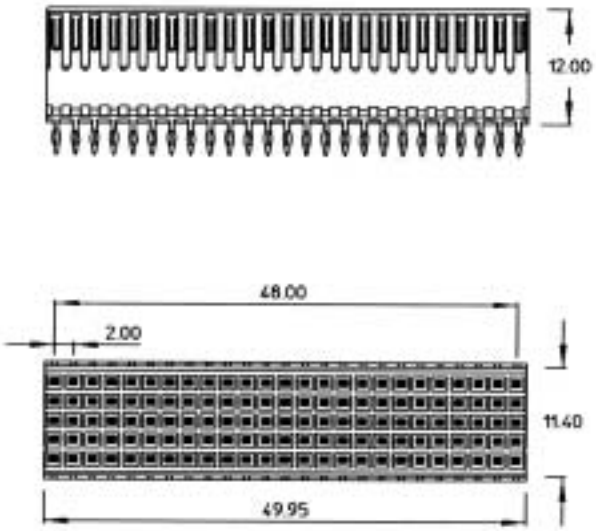

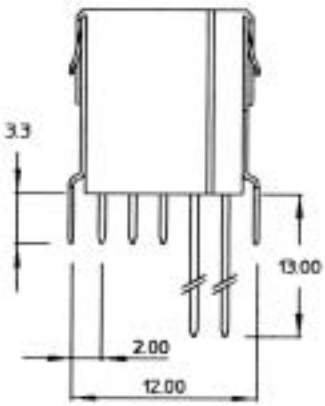

Standard product offer :

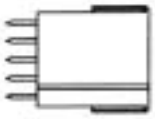

HM2S02PE5100N9
(non shielded)

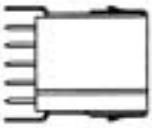

HM2S02PE5101N9
(shielded)

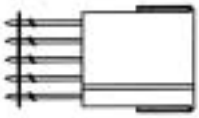

HM2S02PK5100GF
(non shielded)

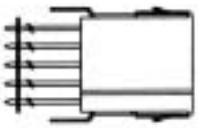

HM2S02PK5101GF
(shielded)

Millipacs® HM

5+2 Row female straight press-fit-to-board connector : TYPE B22

Description

- 5 or 5+2 Row female straight connector with 110 signal contacts.
- Press - fit terminations.
- Non - shielded and shielded versions.
- Short and rear plug-up terminations.
- Customized loading arrangements on request.
- Board lay-out : see page 80.

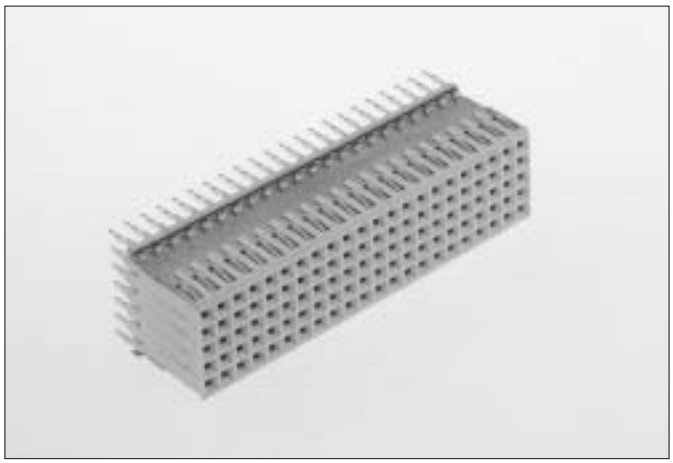

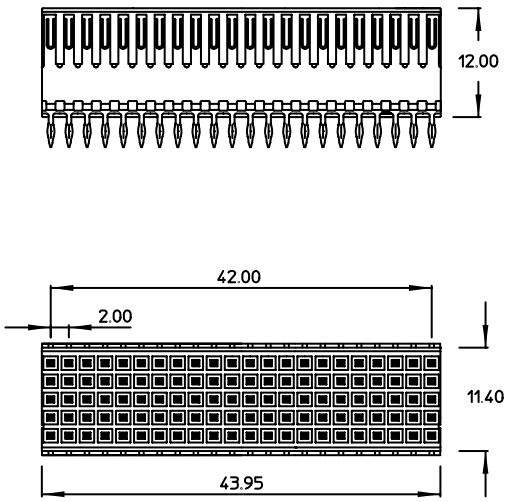

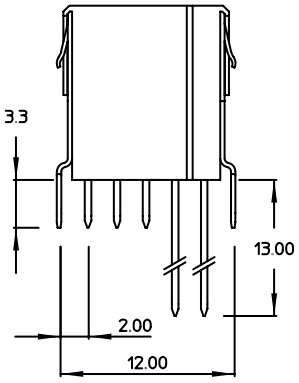

Standard product offer :

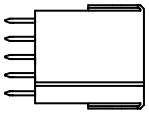

HM2S70PE5100N9
(non shielded)

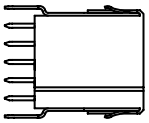

HM2S70PE5101N9
(shielded)

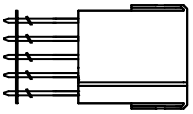

HM2S70PK5100GF
(non shielded)

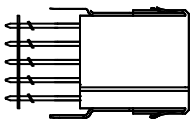

HM2S70PK5101GF
(shielded)

Millipacs® HM

5+2 Row female straight press-fit-to-board connector : TYPE B19

Description

- 5 or 5+2 Row female straight connector with 95 signal contacts.
- Press - fit terminations.
- Non - shielded and shielded versions.
- Short and rear plug-up terminations.
- Customized loading arrangements on request.
- Board lay-out : see page 80.

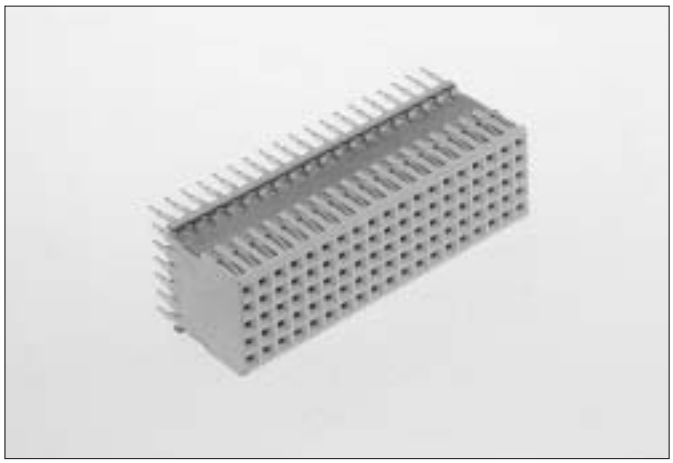

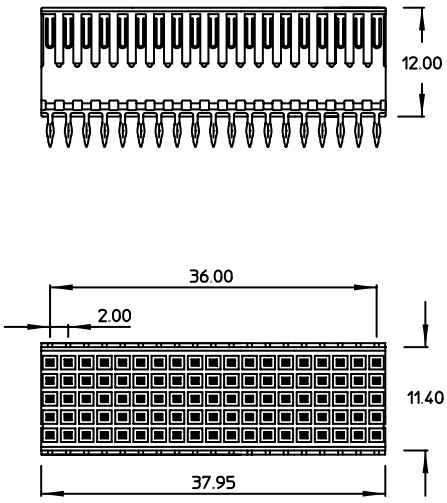

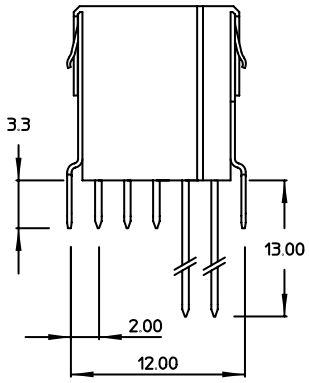

Standard product offer :

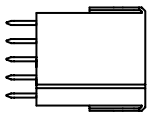

HM2S71PE5100N9
(non shielded)

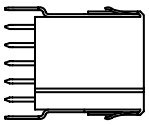

HM2S71PE5101N9
(shielded)

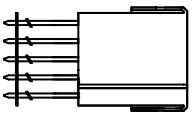

HM2S71PK5100GF
(non shielded)

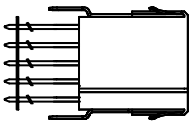

HM2S71PK5101GF
(shielded)

Millipacs® HM

5+2 Row female straight press-fit-to-board connector : TYPE C

Description

- 5 or 5+2 Row female straight connector with 55 signal contacts.
- Integrated pegs for guiding & polarization.
- Press - fit terminations.
- Non - shielded and shielded versions.
- Short and rear plug-up terminations.
- Customized loading arrangements on request.
- Board lay-out : see page 80.

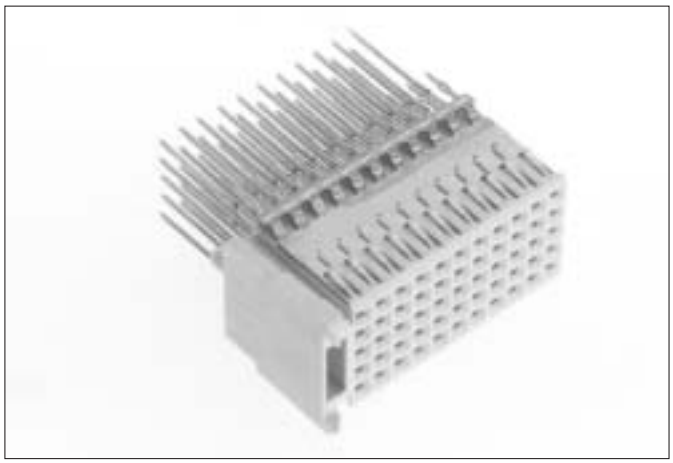

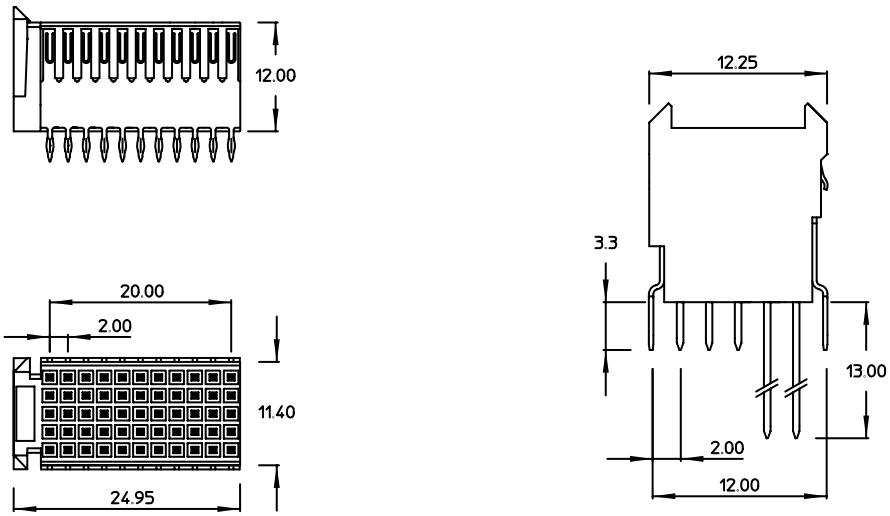

Standard product offer :

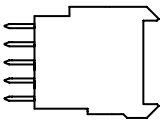

HM2S30PE5100N9
(non shielded)

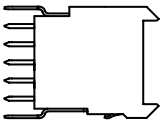

HM2S30PE5101N9
(shielded)

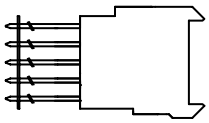

HM2S30PK5100GF
(non shielded)

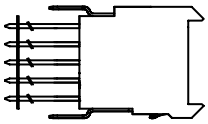

HM2S30PK5101GF
(shielded)

Millipacs® HM

5 Row male right angle press-fit-to-board connector : TYPE A

Description

- 5 or 5+1 Row male right angle connector with 110 signal contacts.
- Integrated “MP” center for polarization and coding. (“MP” = multi purpose center).
- Press - fit terminations.
- Non - shielded and top shielded versions.
- Customized loading arrangements on request.
- Board lay-out : see page 80.

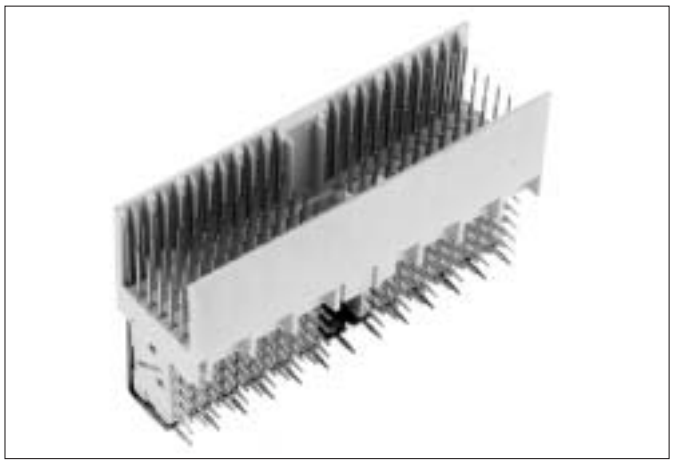

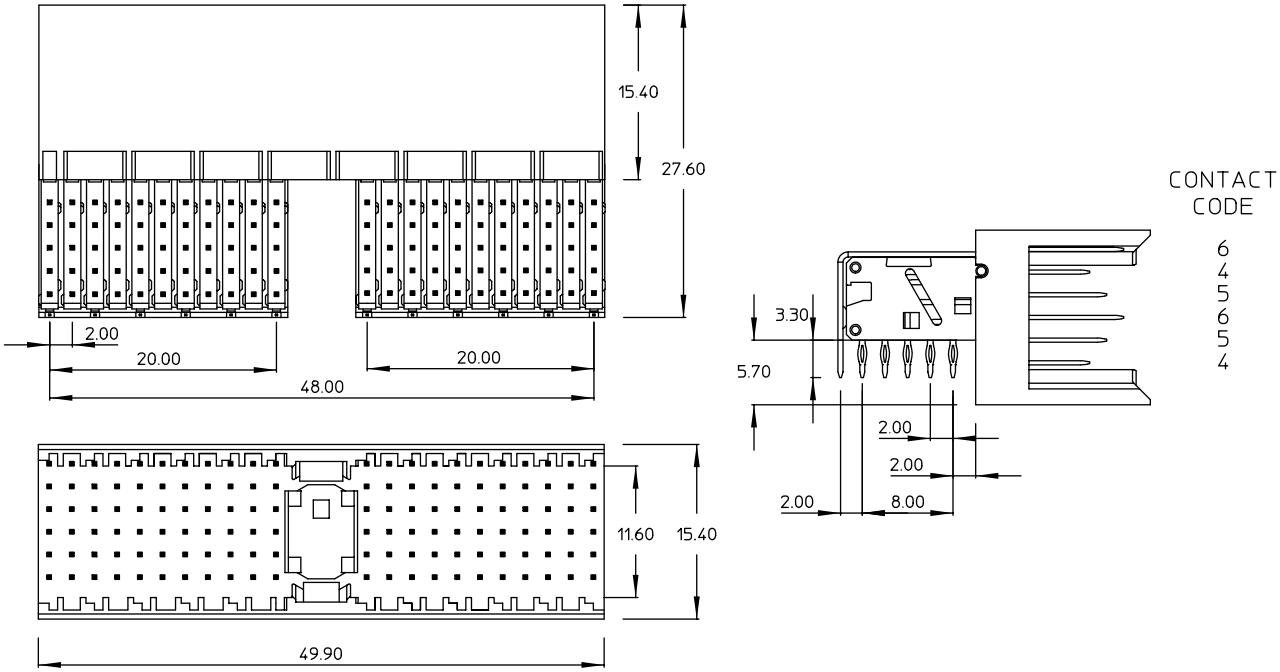

Standard product offer :

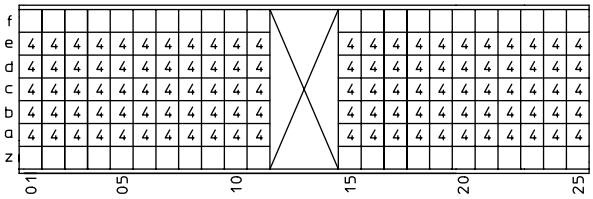

HM2J07PE5110N9
(non shielded)

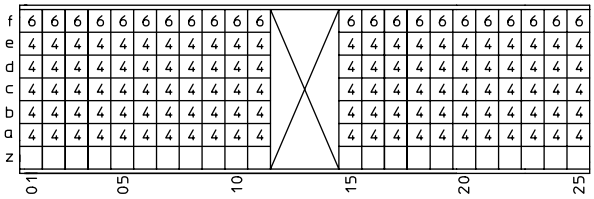

HM2J07PE5118N9
(top shielded)

Millipacs® HM

5 Row male right angle press-fit-to-board connector : TYPE B

Description

- 5 or 5+1 Row male right angle connector with 125 signal contacts.
- Press - fit terminations.
- Non - shielded and top shielded versions.
- Customized loading arrangements on request.
- Board lay-out : see page 80.

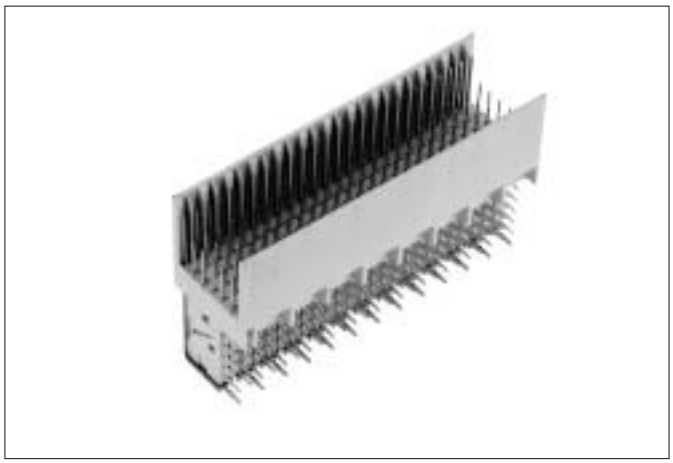

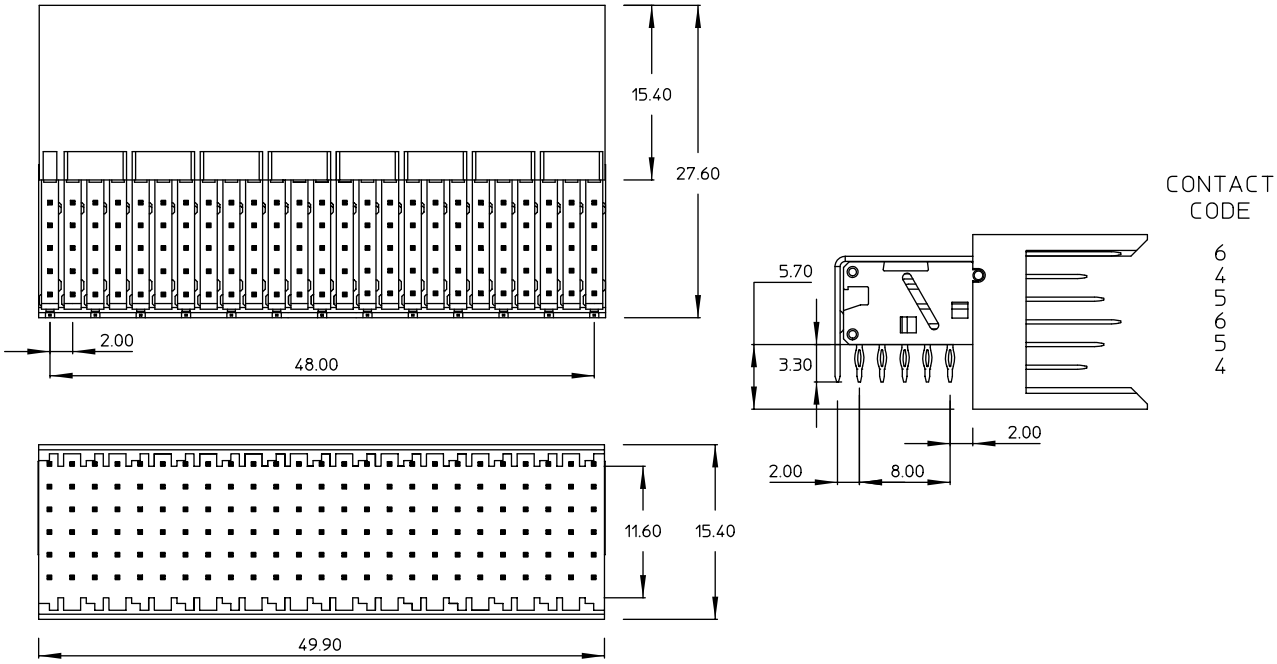

Standard product offer :

	01				05				10				15				20				25
f																					
e	4	4	4	4	4	4	4	4	4	4	4	4	4	4	4	4	4	4	4	4	4
d	4	4	4	4	4	4	4	4	4	4	4	4	4	4	4	4	4	4	4	4	4
c	4	4	4	4	4	4	4	4	4	4	4	4	4	4	4	4	4	4	4	4	4
b	4	4	4	4	4	4	4	4	4	4	4	4	4	4	4	4	4	4	4	4	4
a	4	4	4	4	4	4	4	4	4	4	4	4	4	4	4	4	4	4	4	4	4
z																					

HM2J08PE5110N9
(non shielded)

	01				05				10				15				20				25
f	6	6	6	6	6	6	6	6	6	6	6	6	6	6	6	6	6	6	6	6	6
e	4	4	4	4	4	4	4	4	4	4	4	4	4	4	4	4	4	4	4	4	4
d	4	4	4	4	4	4	4	4	4	4	4	4	4	4	4	4	4	4	4	4	4
c	4	4	4	4	4	4	4	4	4	4	4	4	4	4	4	4	4	4	4	4	4
b	4	4	4	4	4	4	4	4	4	4	4	4	4	4	4	4	4	4	4	4	4
a	4	4	4	4	4	4	4	4	4	4	4	4	4	4	4	4	4	4	4	4	4
z																					

HM2J08PE5118N9
(top shielded)

Millipacs® HM

5 Row male right angle press-fit-to-board connector : TYPE B22

Description

- 5 or 5+1 Row male right angle connector with 110 signal contacts.
- Press - fit terminations.
- Non - shielded and top shielded versions.
- Customized loading arrangements on request.
- Board lay-out : see page 80.

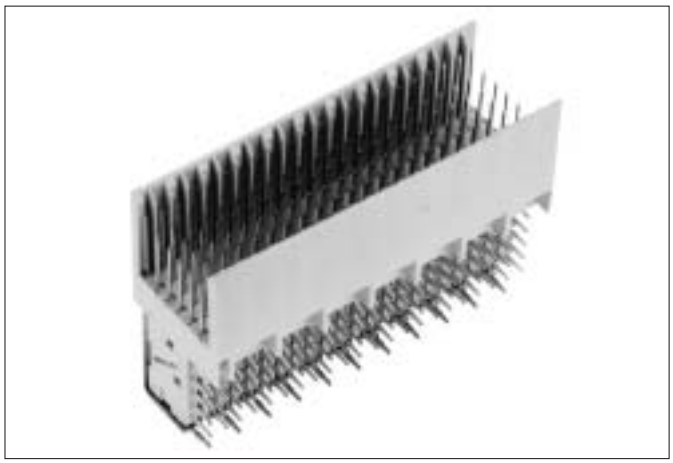

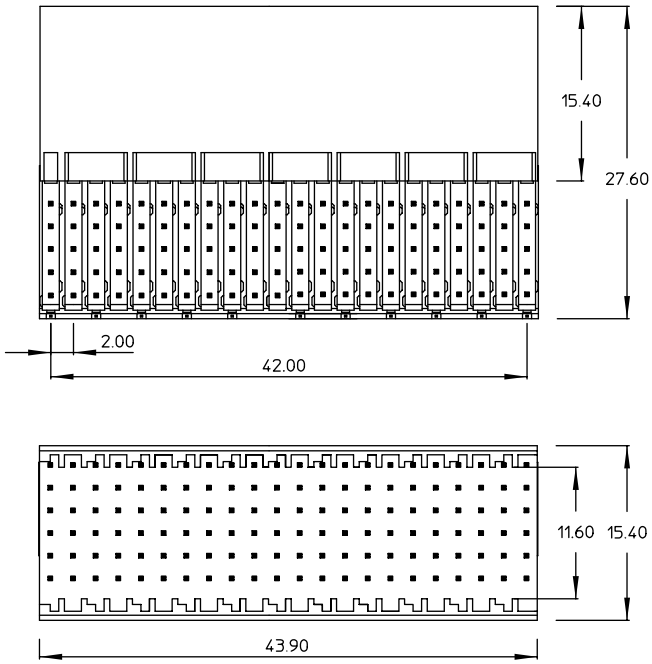

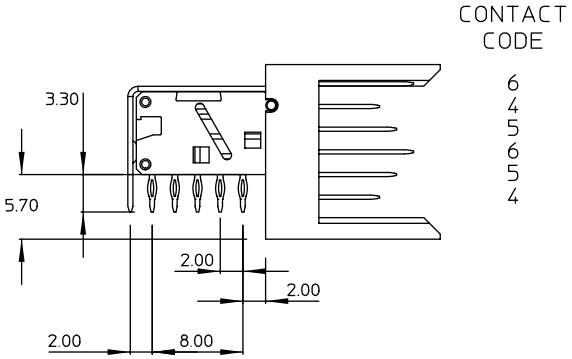

Standard product offer :

	01					05					10					15					20
f																					
e	4	4	4	4	4	4	4	4	4	4	4	4	4	4	4	4	4	4	4	4	4
d	4	4	4	4	4	4	4	4	4	4	4	4	4	4	4	4	4	4	4	4	4
c	4	4	4	4	4	4	4	4	4	4	4	4	4	4	4	4	4	4	4	4	4
b	4	4	4	4	4	4	4	4	4	4	4	4	4	4	4	4	4	4	4	4	4
a	4	4	4	4	4	4	4	4	4	4	4	4	4	4	4	4	4	4	4	4	4
z																					

HM2J70PE5110N9
(non shielded)

	01					05					10					15					20
f	6	6	6	6	6	6	6	6	6	6	6	6	6	6	6	6	6	6	6	6	6
e	4	4	4	4	4	4	4	4	4	4	4	4	4	4	4	4	4	4	4	4	4
d	4	4	4	4	4	4	4	4	4	4	4	4	4	4	4	4	4	4	4	4	4
c	4	4	4	4	4	4	4	4	4	4	4	4	4	4	4	4	4	4	4	4	4
b	4	4	4	4	4	4	4	4	4	4	4	4	4	4	4	4	4	4	4	4	4
a	4	4	4	4	4	4	4	4	4	4	4	4	4	4	4	4	4	4	4	4	4
z																					

HM2J70PE5118N9
(top shielded)

Millipacs® HM

5 Row male right angle press-fit-to-board connector : TYPE B19

Description

- 5 or 5+1 Row male right angle connector with 95 signal contacts.
- Press - fit terminations.
- Non - shielded and top shielded versions.
- Customized loading arrangements on request.
- Board lay-out : see page 80.

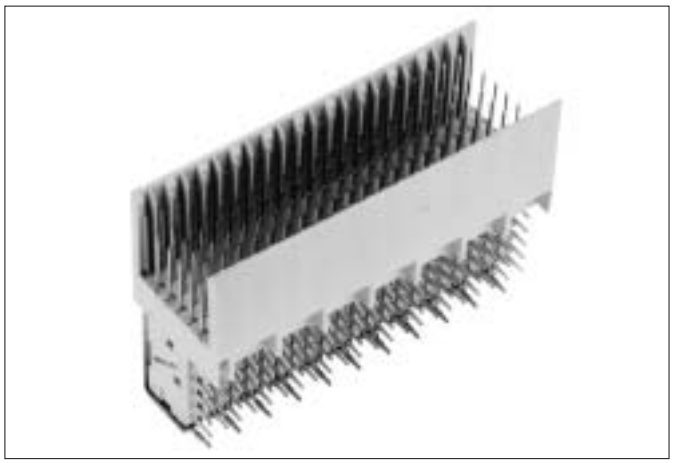

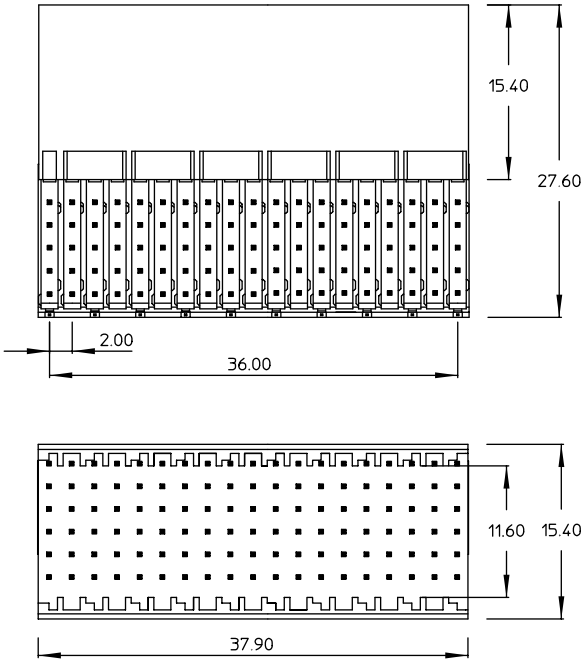

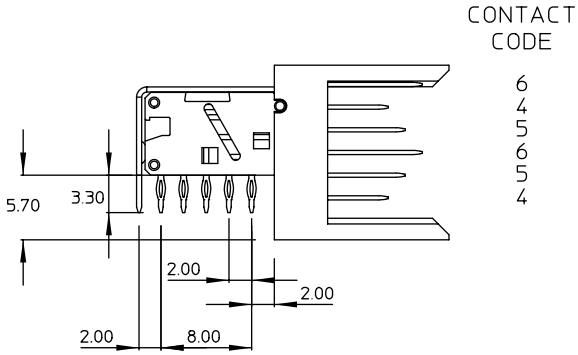

Standard product offer :

	01				05				10				15				
f																	
e	4	4	4	4	4	4	4	4	4	4	4	4	4	4	4	4	4
d	4	4	4	4	4	4	4	4	4	4	4	4	4	4	4	4	4
c	4	4	4	4	4	4	4	4	4	4	4	4	4	4	4	4	4
b	4	4	4	4	4	4	4	4	4	4	4	4	4	4	4	4	4
a	4	4	4	4	4	4	4	4	4	4	4	4	4	4	4	4	4
z																	

HM2J71PE5110N9
(non shielded)

	01				05				10				15				
f	6	6	6	6	6	6	6	6	6	6	6	6	6	6	6	6	6
e	4	4	4	4	4	4	4	4	4	4	4	4	4	4	4	4	4
d	4	4	4	4	4	4	4	4	4	4	4	4	4	4	4	4	4
c	4	4	4	4	4	4	4	4	4	4	4	4	4	4	4	4	4
b	4	4	4	4	4	4	4	4	4	4	4	4	4	4	4	4	4
a	4	4	4	4	4	4	4	4	4	4	4	4	4	4	4	4	4
z																	

HM2J71PE5118N9
(top shielded)

Millipacs® HM

5 Row male right angle press-fit-to-board connector : TYPE C

Description

- 5 or 5+1 Row male right angle connector with 55 signal contacts.
- Integrated area for guiding & polarization.
- Press - fit terminations.
- Non - shielded and top shielded versions.
- Customized loading arrangements on request.
- Board lay-out : see page 80.

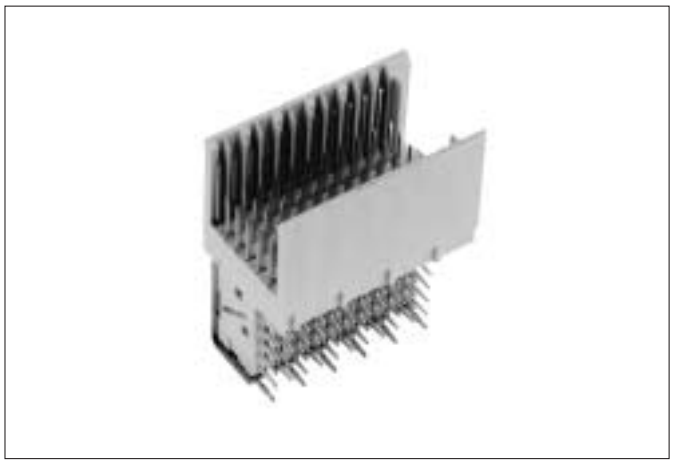

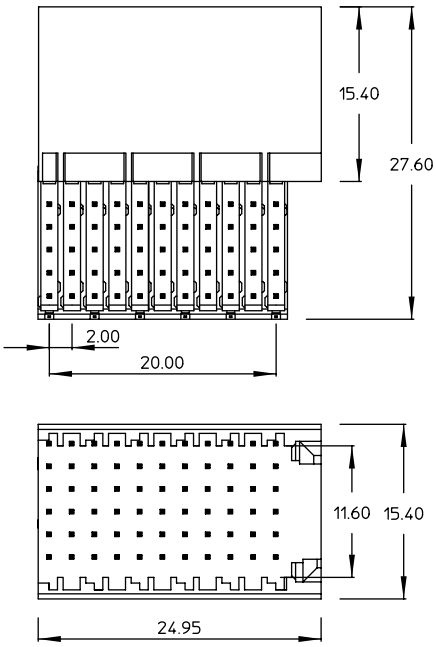

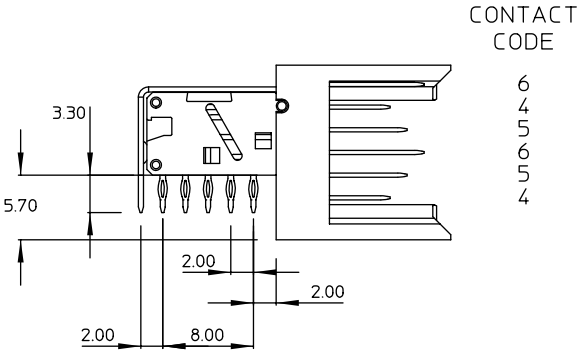

Standard product offer :

	01				05				10	
f										
e	4	4	4	4	4	4	4	4	4	4
d	4	4	4	4	4	4	4	4	4	4
c	4	4	4	4	4	4	4	4	4	4
b	4	4	4	4	4	4	4	4	4	4
a	4	4	4	4	4	4	4	4	4	4
z										

HM2J09PE5110N9
(non shielded)

	01				05				10	
f	6	6	6	6	6	6	6	6	6	6
e	4	4	4	4	4	4	4	4	4	4
d	4	4	4	4	4	4	4	4	4	4
c	4	4	4	4	4	4	4	4	4	4
b	4	4	4	4	4	4	4	4	4	4
a	4	4	4	4	4	4	4	4	4	4
z										

HM2J09PE5118N9
(top shielded)

Millipacs® HM

5 Row Input / Output non-shielded cable connectors : LF types

Description

- 5 Row cable connector with 10 or 20 signal contacts.
- Transversal mounting on the pin array.
- 4 - Contact point IDC configuration for discrete wires.
- Individual strain relief per contact.
- AWG 26 – AWG 30.
- Accommodates solid and stranded wires.
- Integrated polarization.
- Not stackable.
- Field installable and repairable.

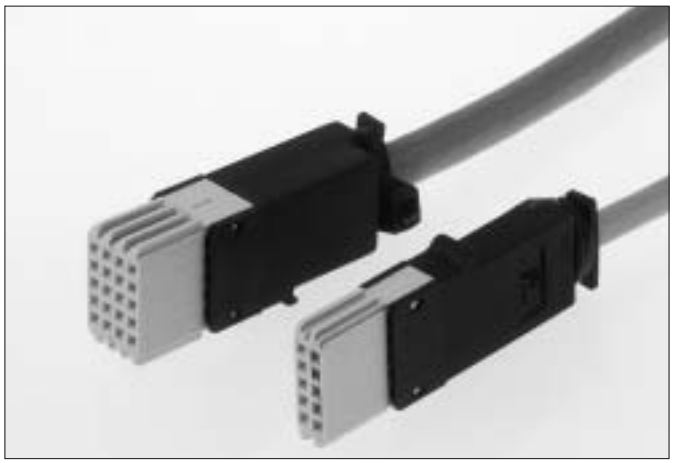

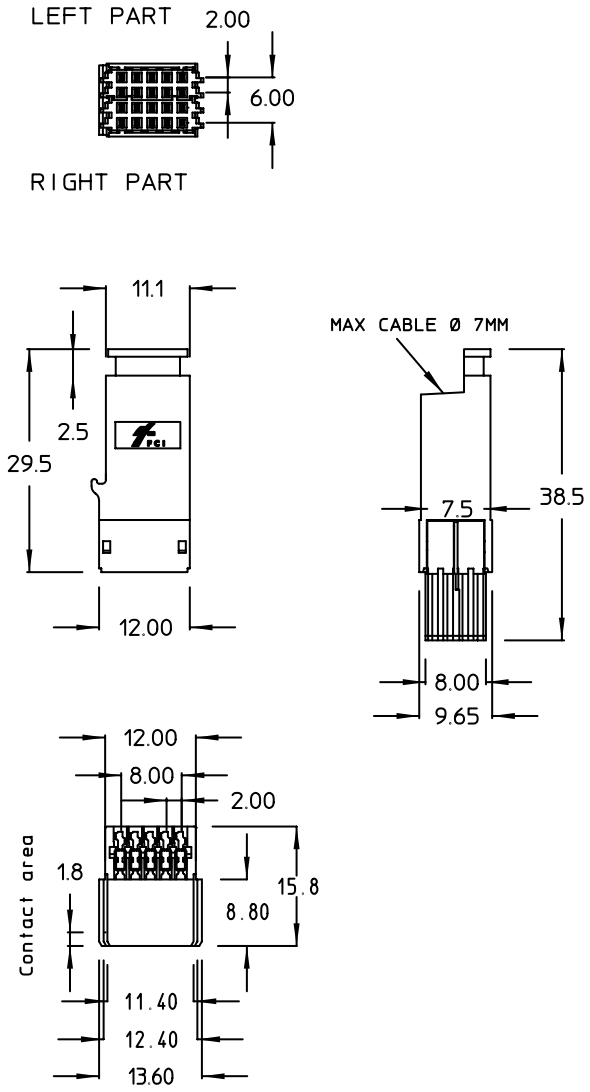

AWG 26 : HM2C01D2C010N9
AWG28-30 : HM2C01D0C010N9

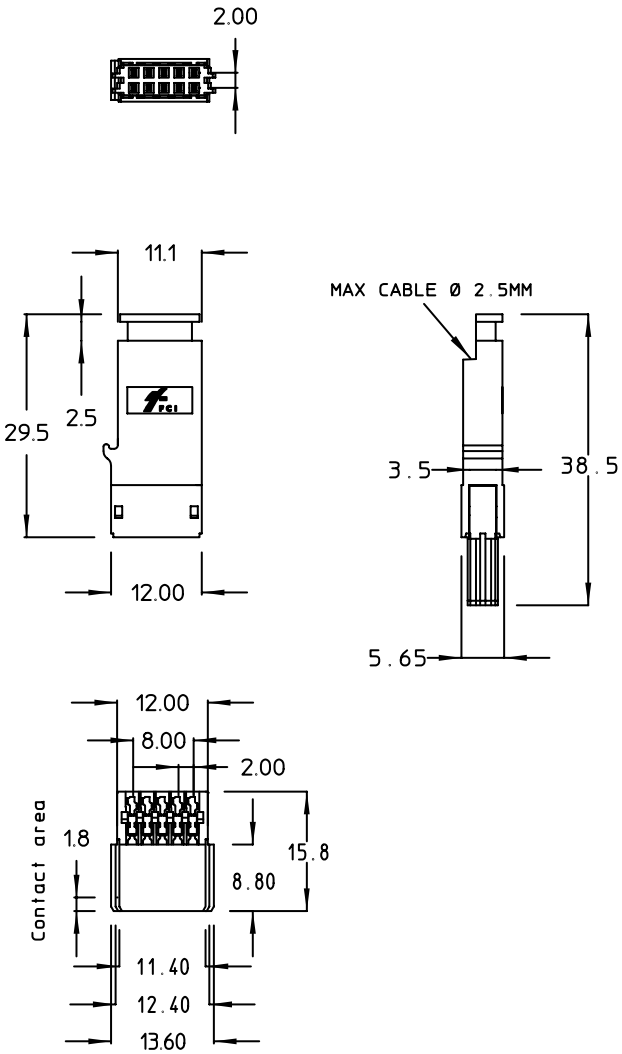

AWG26 : HM2C06D2C010N9
AWG28-30 : HM2C06D0C010N9

Millipacs® HM

5+2 Row Input / Output shielded cable connectors : LF types

Description

- 5+2 Row shielded cable connector with 10, 20, 30 or 40 signal contacts.
- Transversal mounting on the pin array.
- 4 - Contact point IDC configuration for discrete wires.
- Individual strain relief per contact.
- AWG 26 – AWG 30.
- Accommodates solid and stranded wires.
- Integrated polarization.
- Cable braid <-> Metal cover : crimp connected.
- Fully stackable.
- Polarized plastic snap-on cover.
- Field installable and repairable.

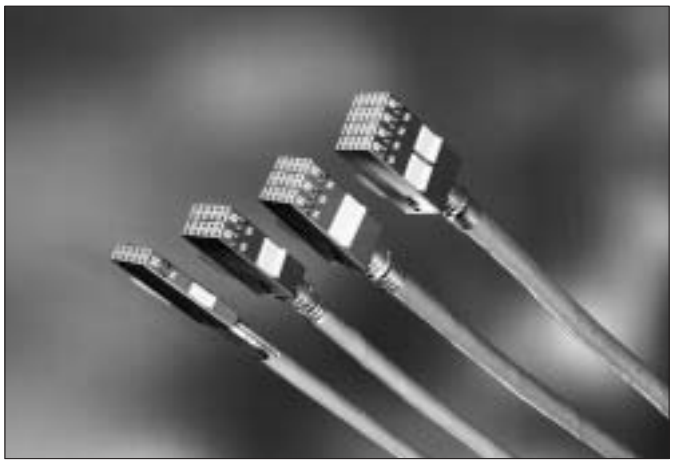

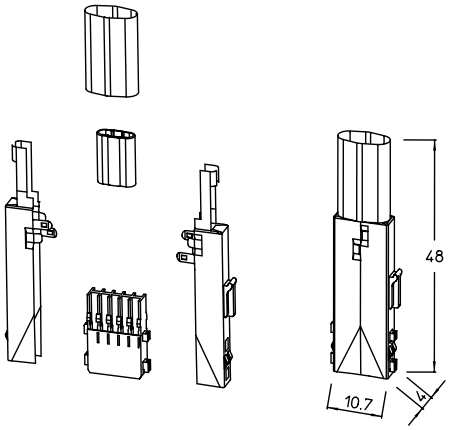

2 x 5 positions

AWG 26 : HM2C09D2C011N9
AWG 28-30 : HM2C09D0C011N9

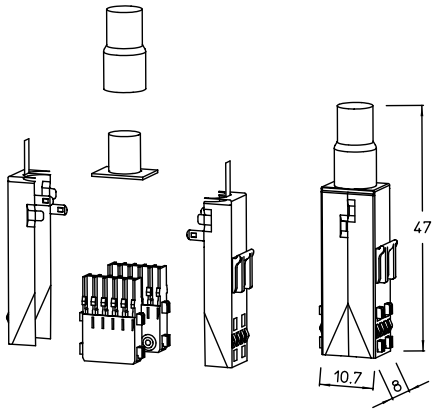

4 x 5 positions

AWG 26 : HM2C10D2C011N9
AWG 28-30 : HM2C10D0C011N9

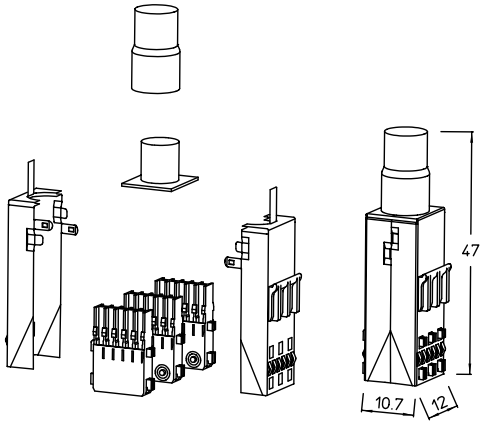

6 x 5 positions

AWG 26 : HM2C11D2C011N9
AWG 28-30 : HM2C11D0C011N9

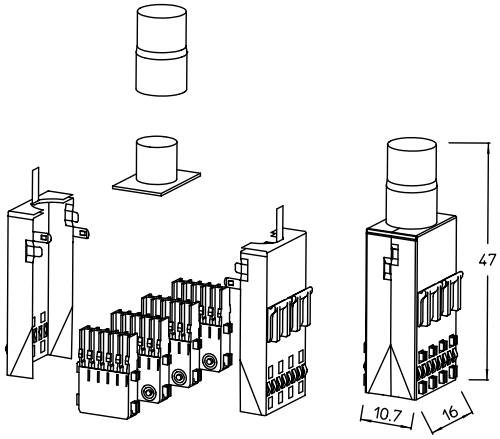

8 x 5 positions

AWG 26 : HM2C12D2C011N9
AWG 28-30 : HM2C12D0C011N9

5+2 Row Board to Board shrouds : ALL TYPES

Description

- 5 or 5+2 Row empty rear plug-up shrouds for midplane and/or butterfly applications.
- Integrated “MP” center for polarization and coding or guiding area, except for type B.
- Shroud retention achieved by forced-fit over plug tails.
- No additional mechanical fixation.
- Moulded-on spacers.
- Same mating conditions as for male headers.

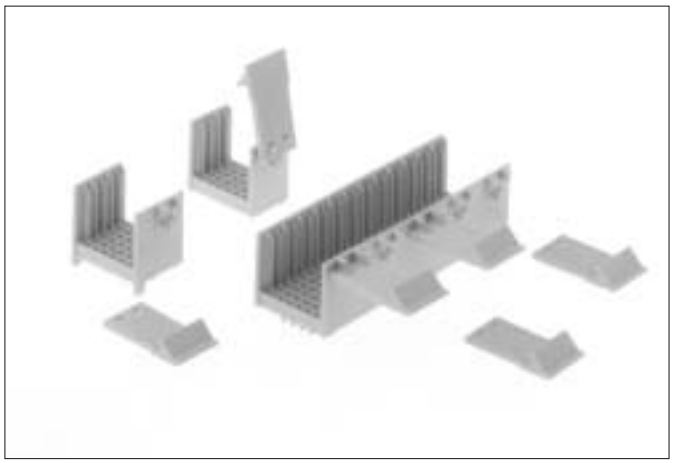

How to define the correct shroud height?

L1: shroud bottom height (stand-off included)
B: backplane thickness
L2: rear pin mating level (5.3/6.8/8.3 mm)
L: total pin length rear plug-up (13.0/14.5/16.0)

L1 = L - L2 - B

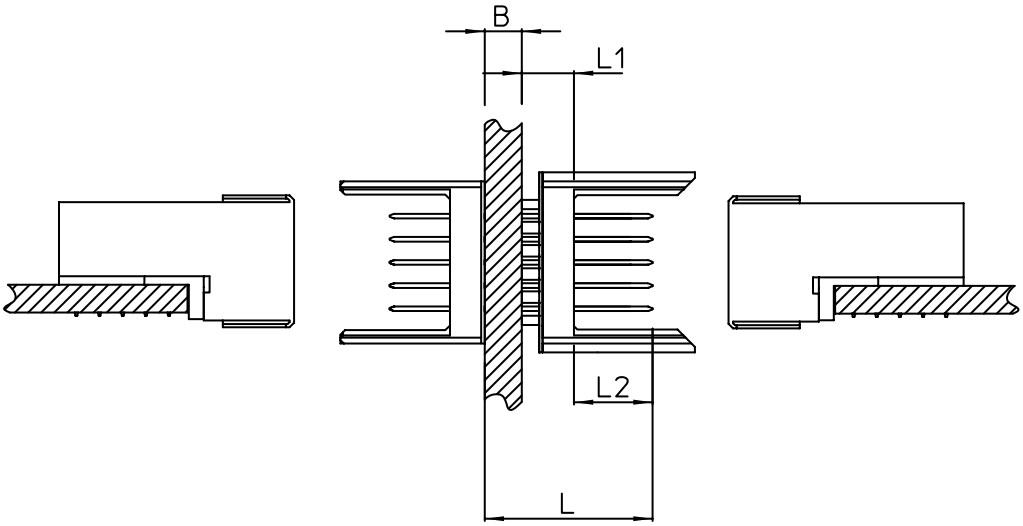

Available shroud heights :

L1	3.0 mm	3.9 mm	4.1 mm	4.3 mm	4.5 mm	4.7 mm	4.9 mm	5.2 mm	6.0 mm
□□	–	09	11	13	15	17	19	22	30

* Remark : □□ in part number refers to the number code in the table.

Millipacs® HM

Standard product offer :

HM2H06P1□□ (type 5X5)

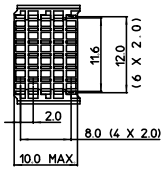

HM2H09P1□□ (type C)

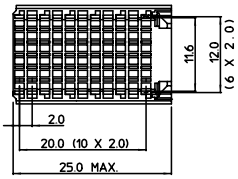

HM2H42P1□□ (type 6X5)

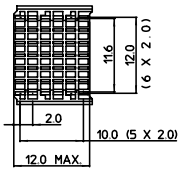

HM2H80P1□□ (type CR)

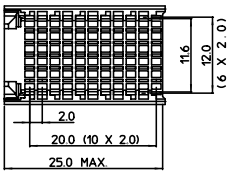

HM2H07P1□□ (type A)

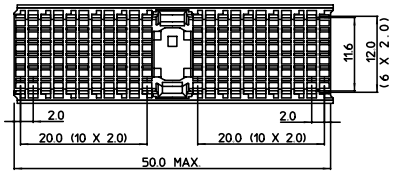

HM2H65P1□□ (type AB)

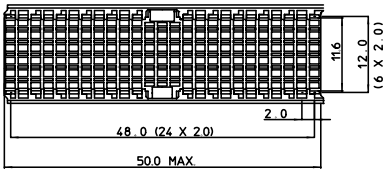

HM2H08P1□□ (type B)

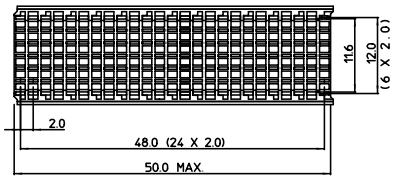

HM2H66P1□□ (type AB22)

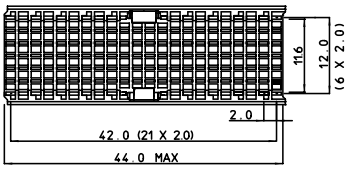

HM2H70P1□□ (type B22)

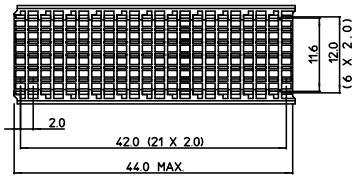

HM2H67P1□□ (type AB19)

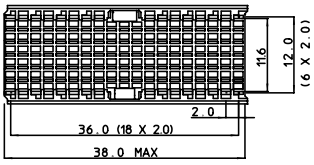

HM2H71P1□□ (type B19)

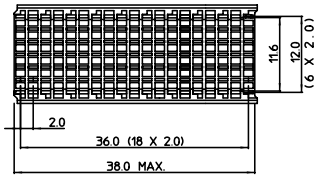

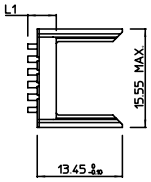

5+2 Row Cable to Board shrouds : ALL TYPES

Description

- 5 or 5+2 Row empty rear plug-up shrouds for cable connector applications.
- Integrated polarization ribs.
- Moulded-on locking key features; locking key to be ordered separately.
- Shroud retention achieved by forced-fit over plug tails.
- No additional mechanical fixation.
- Moulded-on spacers.
- Correct spacer height definition : see page 60.
- Available spacer heights : see page 60.

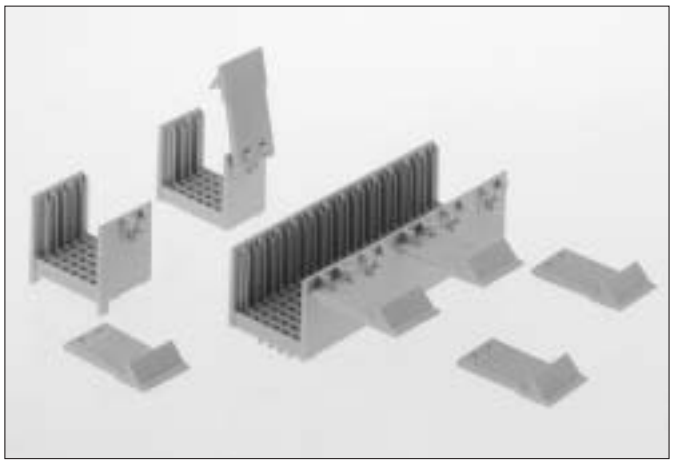

Locking key :
HM2LK1

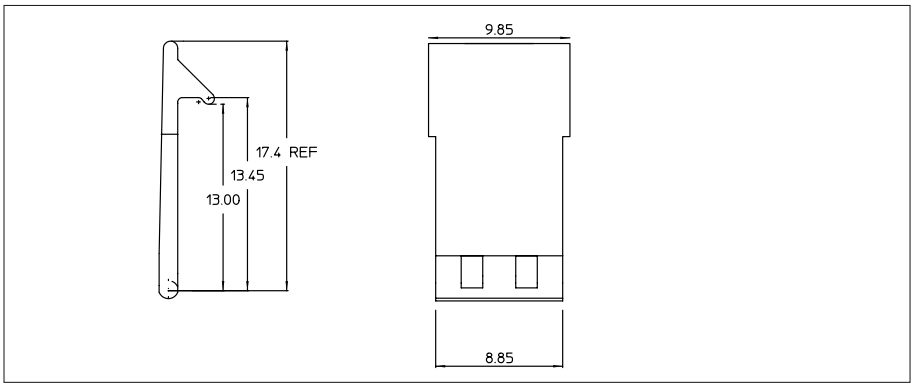

Standard product offer :

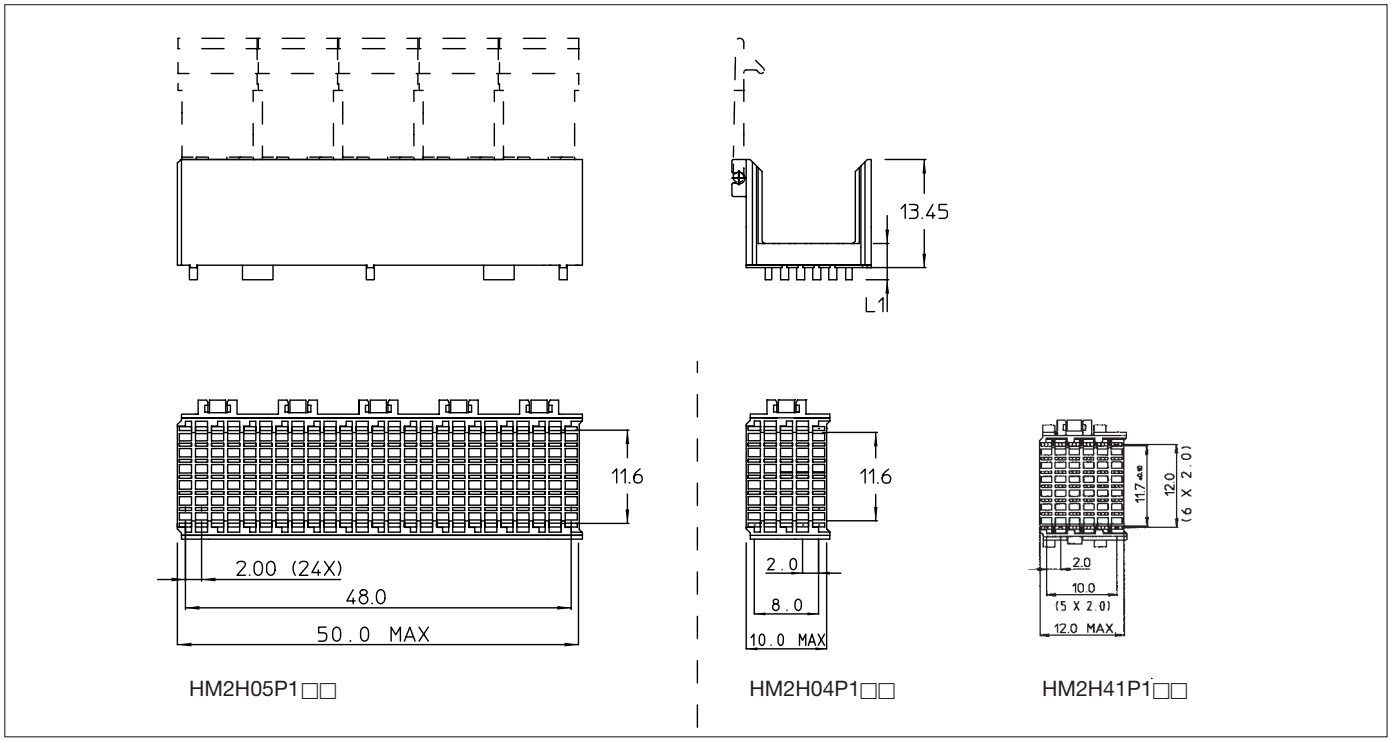

Millipacs® HM

8 and 8+2 Row Board to Board shrouds : ALL TYPES

Description

- 8 or 8+2 Row empty rear plug-up shrouds for midplane and/or butterfly applications.
- Integrated “MP” center for polarization and coding or guiding area, except for type E.
- Shroud retention achieved by forced-fit over plug tails.
- No additional mechanical fixation.
- Moulded-on spacers.
- Same mating conditions as for male headers.
- Additional guiding pin area integrated in type D.
- correct shroud height definition : see page 60.
- Available spacer heights : see page 60.

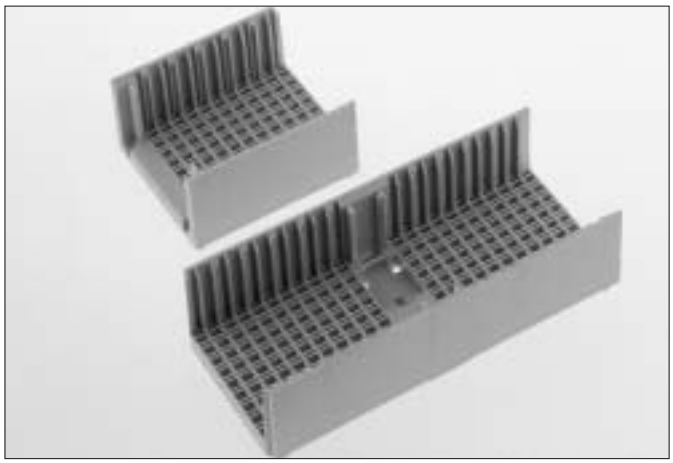

Standard product offer :

HM2H87P1□□ (type D)

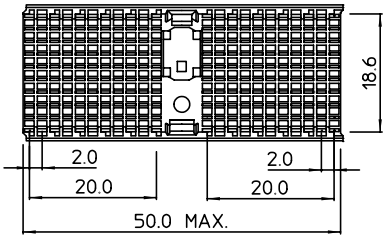

HM2H89P1□□ (type F)

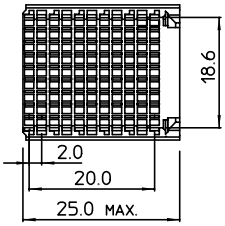

HM2H88P1□□ (type E)

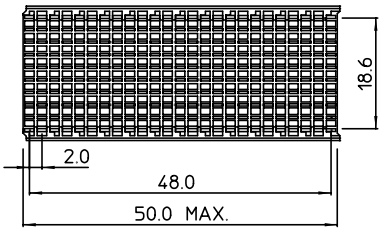

HM2H82P1□□ (type FR)

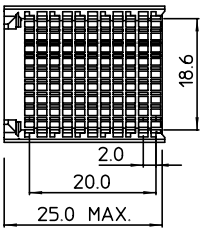

HM2H95P1□□ (type DE)

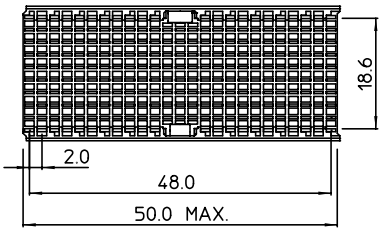

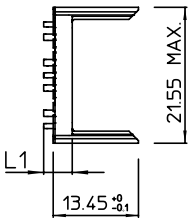

Millipacs® HM

ESD, Power and Guiding hardware

Description

- Stand-alone system to be used at any location within a connector configuration.
- Stackable system.
- Current rating : 10 A max.
- Guiding & pre-mating : 12 mm in advance of level 3 signal contacts.
- Different pin lengths available on request.

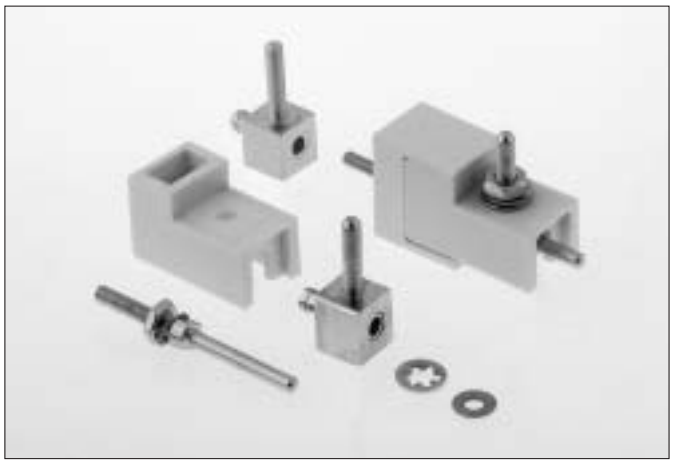

HM2G01

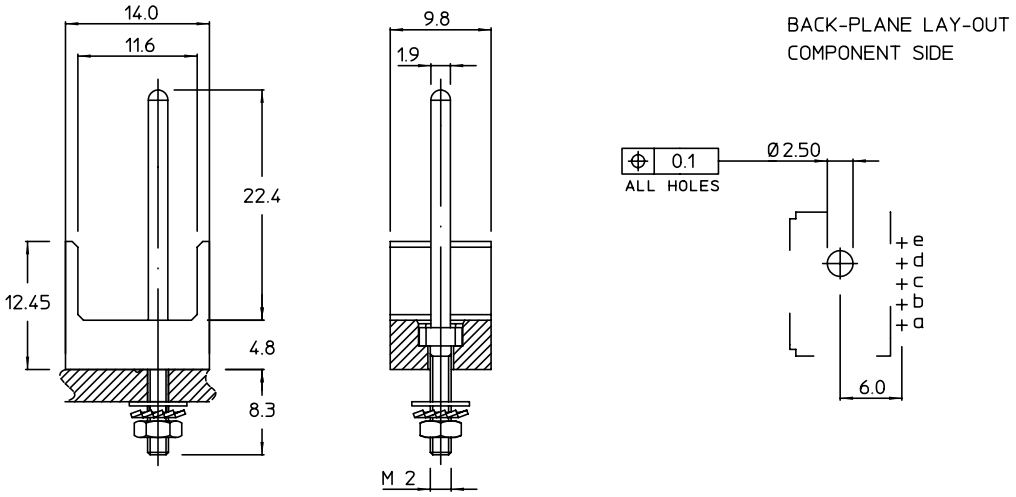

HM2G02

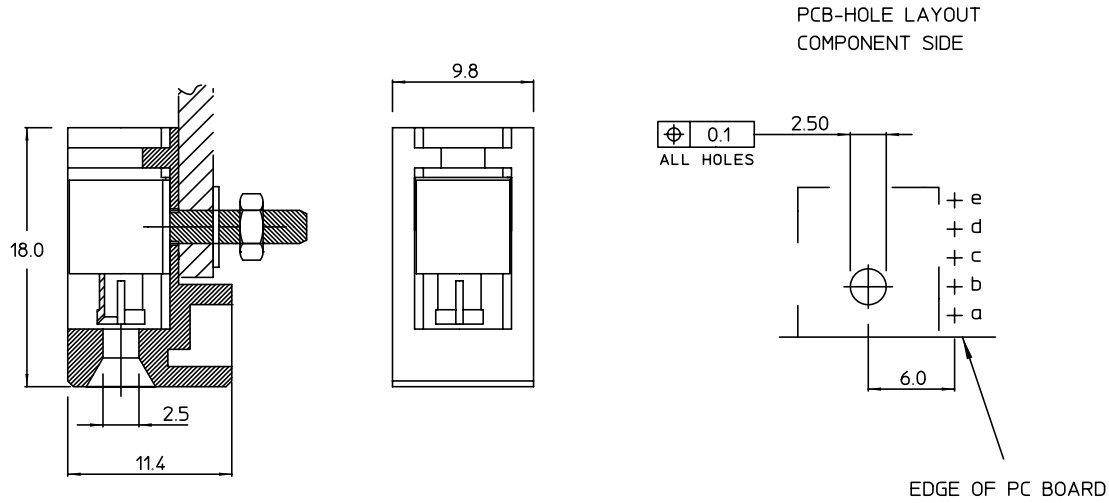

Millipacs® HM

Power contacts

Description

Power pin and socket contacts for type L, M and N modules in accordance with DIN 41626 specifications.

Features and benefits

- High precision contacts to maximize durability performance.
- Beryllium copper locking spring for adequate locking and positioning of contacts into connector housing cavities.
- Wide variety of contact styles for crimp, dip and handsolder or press-fit connections.
- Contact plating types to meet various application requirements in the most cost effective way.
- Wide range of installation tools optimizing crimp connection performances.
- Contact removed from connector housing with simple extraction tool.

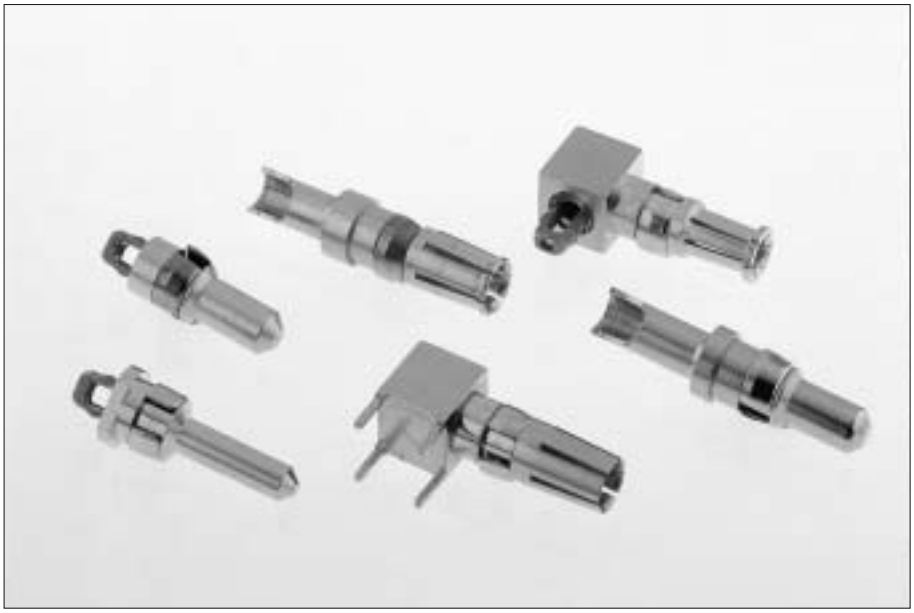

Construction

Contact material	: copper alloy
Outer retention spring	: beryllium copper
Contact plating	: gold over nickel
Spring plating	: nickel

Performance characteristics

Operating temperature	: -55°C to +125°C
Operating current	: AWG 16 = 10 A AWG 12 = 20 A AWG 10 = 30 A
Insertion force	: 10 N max. per contact pair
Extraction force	: 1.6 N min. per contact pair
Contact retention in housing	: 50 N min.

Standard power contacts

Handsolder contacts

pin contact

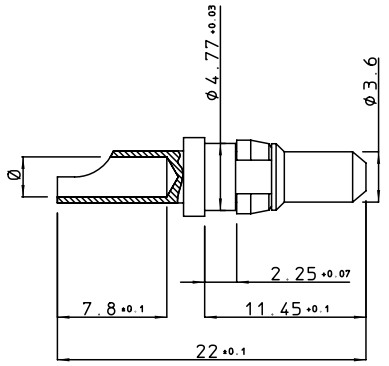

socket contact

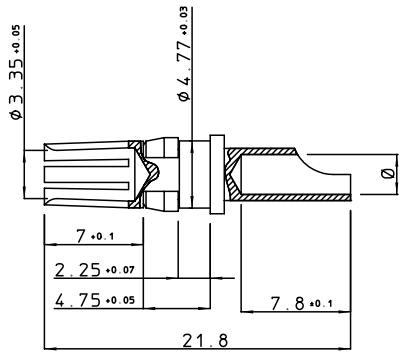

Part number	Wire size AWG	Wire size mm²	Ø	Max. current	Extraction tool Pin contact	Extraction tool Socket contact
R * 16PIE51ERP	16	1.3	1.7	10 A	HM2Y197C	HM2Y197D
R * 12PIE51ERP	12	4.0	2.8	20 A	HM2Y197C	HM2Y197D
R * 10PIE51ERP	10	6.0	3.5	30 A	HM2Y197C	HM2Y197D

(*) : M = pin contact
: C = socket contact

Standard power contacts

Crimp contacts

pin contact

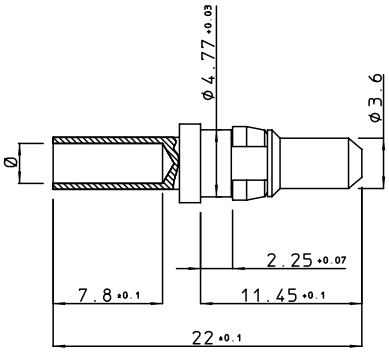

socket contact

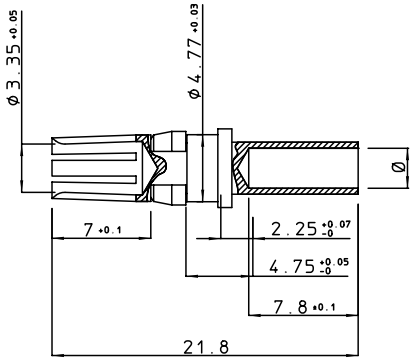

Part number	Wire size AWG	Wire size mm²	Ø	Max. current	Strip length (mm)	Crimp tools M10S1 Dieset	Crimp tools M10S1 Stop	Crimp tools M50F012 Adaptor	Extraction tool Pin	Extraction tool Socket
R * 16PIE57ERP	16	1.3	1.7	10 A	6.4	S16	SL19E1	N° 1	HM2Y197C	HM2Y197D
R * 12PIE57ERP	12	4.0	2.8	20 A	8.5	S16E1	SL19E1	N° 1	HM2Y197C	HM2Y197D
R * 10PIE57ERP	10	6.0	3.5	30 A	8.5	S16E2	SL19E1	N° 3	HM2Y197C	HM2Y197D

(*) : M = pin contact
: C = socket contact

Millipacs® HM

Standard power contacts

Dipsolder contacts

pin contact

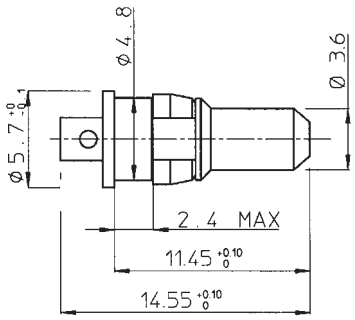

Part number : RM12PIE54ERP
Max. current : 10 A

socket contact

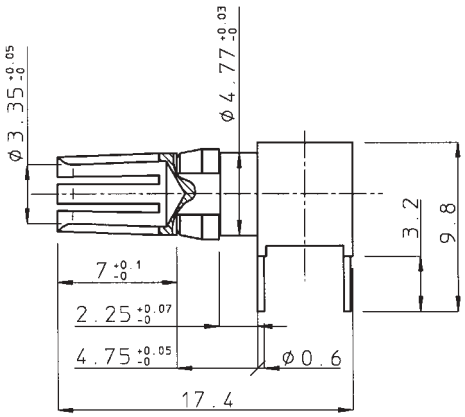

Part number : RC12PIE52ERP
Max. current : 10 A

Press-fit contacts

pin contact

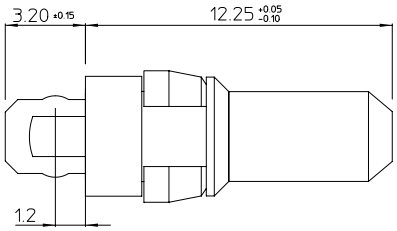

Part number : RM12PIE61ERP
Max. current : 40 A

socket contact

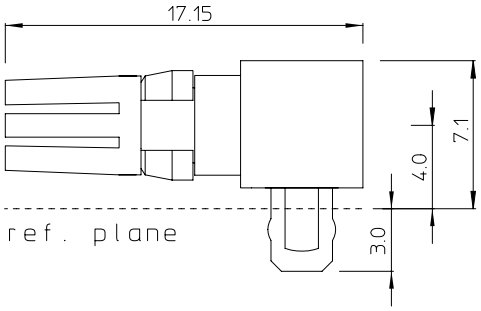

Part number : RC12PIE70ERP
Max. current : 40 A

Millipacs® HM

Advanced power contacts

Handsolder contacts

pin contact

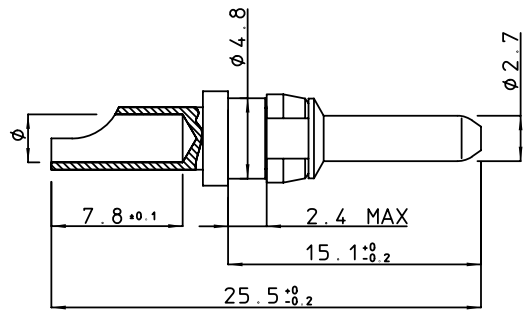

socket contact

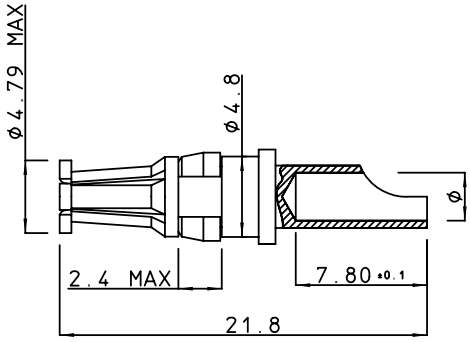

Part number	Wire size AWG	mm²	Ø	Max. current	Extraction tool Pin contact	Extraction tool Socket contact
R * 16PIE91ERP	16	1.3	1.7	10 A	HM2Y197C	HM2Y197D
R * 12PIE91ERP	12	4.0	2.8	20 A	HM2Y197C	HM2Y197D
R * 10PIE91ERP	10	6.0	3.5	30 A	HM2Y197C	HM2Y197D

(*) : M = pin contact
: C = socket contact

Crimp contacts

pin contact

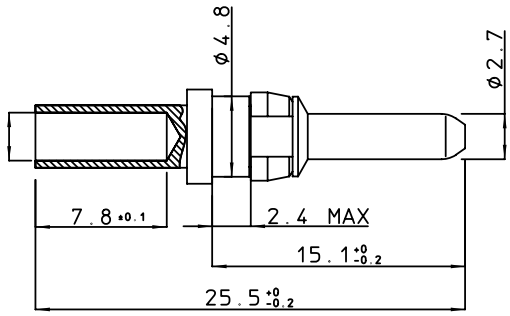

socket contact

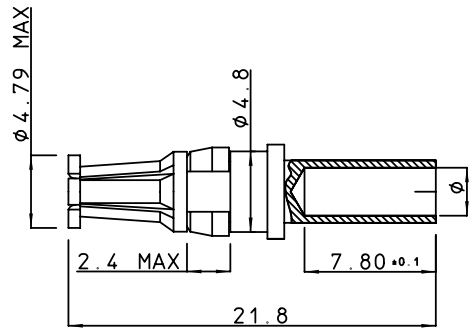

Part number	Wire size AWG	mm²	Ø	Max. current	Strip length (mm)	Crimp tools M10S1 Dieset	Crimp tools M10S1 Stop	Crimp tools M50F012 Adaptor	Extraction tool Pin	Extraction tool Socket
R * 16PIE9ERP	16	1.3	1.7	10 A	6.4	S16	SL19E1	N° 1	HM2Y197C	HM2Y197D
R * 12PIE9ERP	12	4.0	2.8	20 A	8.5	S16E1	SL19E1	N° 1	HM2Y197C	HM2Y197D
R * 10PIE9ERP	10	6.0	3.5	30 A	8.5	S16E2	SL19E1	N° 3	HM2Y197C	HM2Y197D

(*) : M = pin contact
: C = socket contact

Advanced power contacts

Dipsolder contacts

pin contact

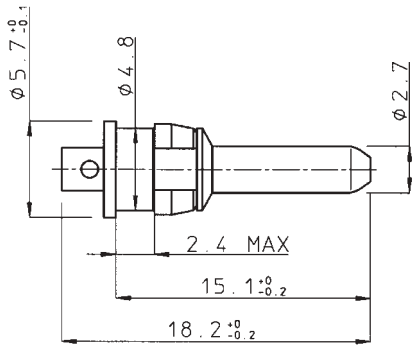

Part number : RM12PIE94ERP
Max. current : 10 A

socket contact

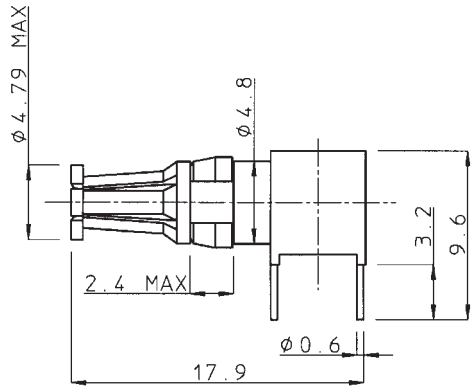

Part number : RC12PIE92ERP
Max. current : 10 A

Press-fit contacts

pin contact

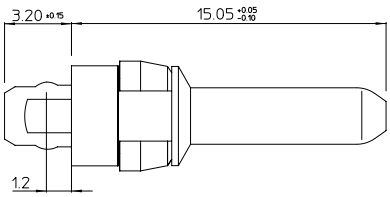

Part number : RM12PIE63ERP
Max. current : 40 A

socket contact

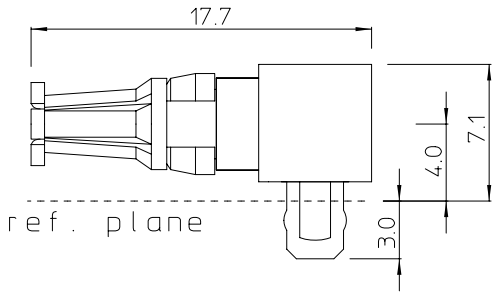

Part number : RC12PIE75ERP
Max. current : 40 A

Millipacs® HM

Coaxial contacts

Description

50 Ω coaxial contacts for type L, M and N modules in accordance with DIN 47297 specification.

Features and benefits

- The coaxial contacts are available with dip solder or crimp type straight and right angle termination.
- The assembly with coaxial cables consists of two operations involving soldering for the inner conductor with the inner contact and crimping for the outer components.
- The crimping operation is done with a handtool equipped with removable die sets according to the cable size.
- Contacts are front released and extracted by a simple handtool.

Construction

Outer and inner contact	: high conductive copper alloy
Spring	: beryllium copper
Contact plating	: gold over nickel
Spring plating	: nickel
Insulation	: PTFE

Performance characteristics

Characteristic impedance	: 50 Ω
Operating temperature	: -55°C to +125°C
Operating frequency	: maximum 30 GHz optimum 0-10 GHz
Reflection*	: 5% max. up to 1 GHz 7% max. up to 4 GHz 10% max. up to 10 GHz

Peak voltage	: 750 Veff
Operating voltage	: 250 Veff
Contact resistance	: outer contact 3 mΩ max inner contact 10 mΩ max

* Only for cable to cable connections

Assembly instructions

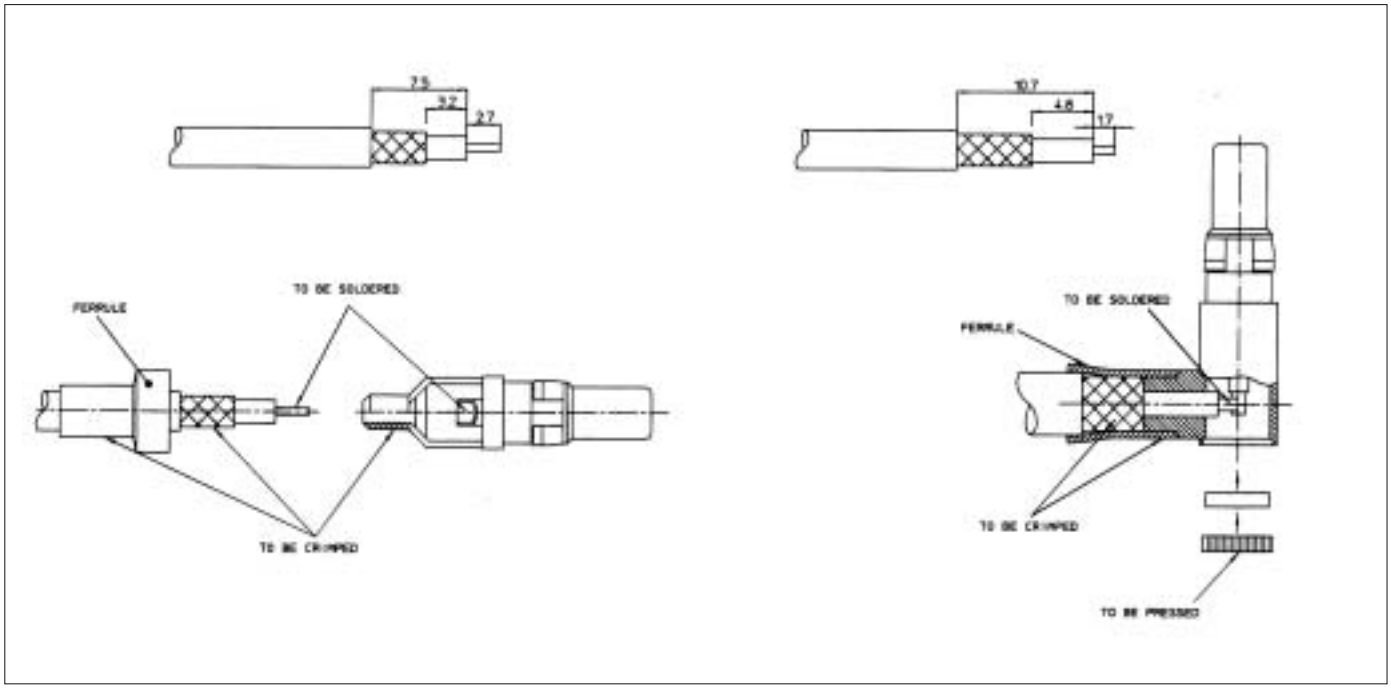

Coaxial contacts

Straight termination

pin contact

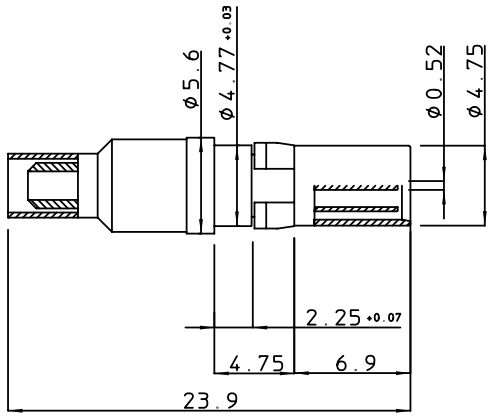

socket contact

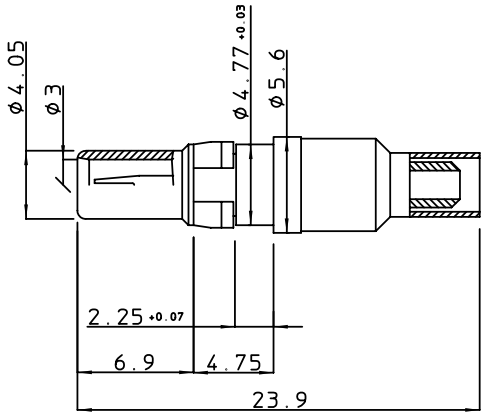

Part number	Coaxial cables	Crimp tool	Die set	Extraction tool Pin	Extraction tool Socket
R * PIS01S02 E2R	RG174A/U	Y101COAXPI	Y101CX02	HM2Y197D	HM2Y197C
	RG188A/U				
	RG316/U				

(*) : M = pin contact
C = socket contact

Right angle termination

socket contact

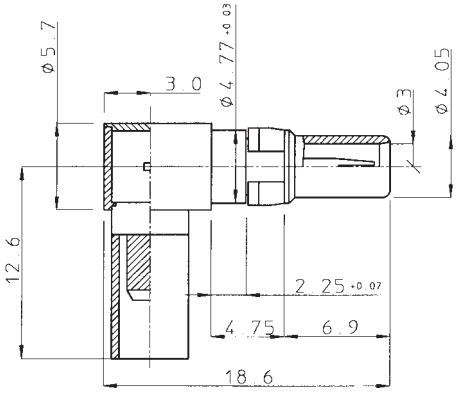

Part number	Coaxial cables	Crimp tool	Die set	Extraction tool
RCPIR01S02 E2R	RG174A/U	Y101COAXPI	Y101CX02	HM2Y197C
	RG188A/U			
	RG316/U			

Dip solder termination

pin contact

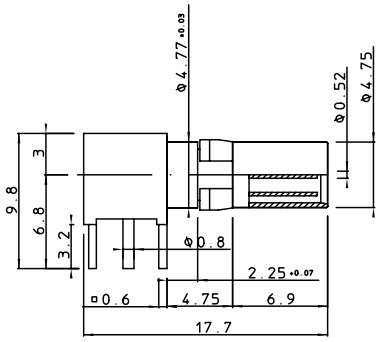

Part number : RMPIR01K00E2R

Coding devices

Description

Coding keys are used to prevent the incorrect insertion of cards into a system. They are clicked into the multifunctional area of male and female connectors with a special tool after the connectors have been pressed in. Each coding key has a different bright and pre-defined RAL color in order to make visual identification and differentiation easy.

HM2DK3568P	2003 pastel orange	HM2DK1247R
HM2DK3478P	5011 steel blue	HM2DK1256R
HM2DK3467P	7015 slate grey	HM2DK1258R
HM2DK3456P	1021 cadmium yellow	HM2DK1278R
HM2DK2578P	6011 reseda green	HM2DK1346R
HM2DK1567P	5007 brilliant blue	HM2DK2348R
HM2DK1356P	4005 blue lilac	HM2DK2478R
HM2DK4678P	1024 ocher yellow	HM2DK1235R
HM2DK1248P	3018 strawberry red	HM2DK3567R
HM2DK1236P	8011 nutbrown	HM2DK4578R
HM2DK1235P	8000 greenbrown	HM2DK4678R
HM2DK1238P	5002 ultramarine blue	HM2DK4567R
HM2DK1267P	7033 cement grey	HM2DK3458R
HM2DK2568P	5020 ocean blue	HM2DK1347R
HM2DK1347P	5014 pigeon blue	HM2DK2568R
HM2DK2467P	2000 yellow orange	HM2DK1358R
HM2DK1456P	6019 pastel green	HM2DK2378R
HM2DK3578P	3027 raspberry red	HM2DK1246R
HM2DK1457P	1015 light ivory	HM2DK2368R
HM2DK2567P	6001 emerald green	HM2DK1348R
HM2DK2458P	4003 heather violet	HM2DK1367R
HM2DK1247P	2004 pure orange	HM2DK3568R
HM2DK2368P	8004 copper brown	HM2DK1457R
HM2DK1258P	6027 light green	HM2DK3467R
HM2DK2346P	3004 purple red	HM2DK1578R

Crimp tools for Power contacts

Description

A complete set of crimp tools is available for the power contacts.
The crimping operation is done with a handtool equipped with removable die sets according to the cable size.

Crimp tool

M10S1

Crimp tool

M50F012

Crimp tools for Coax contacts

Description

A complete set of crimp tools is available for the coax contacts.
The assembly with coaxial cables consists of two operations involving soldering for the inner conductor with the inner contact and crimping for the outer components.

The crimping operation is done with a handtool equipped with removable die set according to the cable size.

Crimp tool

Y101COAXPI

Die set

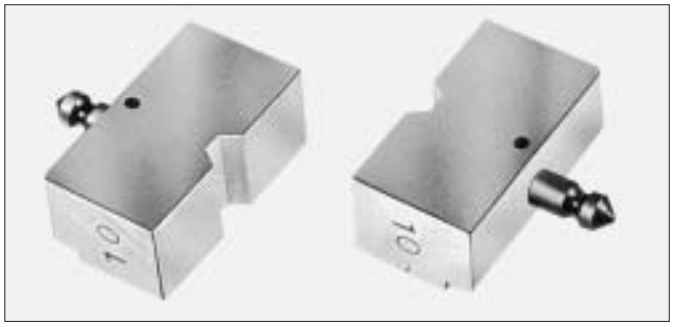

Y101CX02

Tooling : Coding key placing tool

Description

A plastic tool is available to support the coding keys during the fixation in the MP (Multi Purpose) centers.

How to order : HM2Y197E

Pin repair tooling for removal of individual contacts

Description

For the repair of damaged contacts on a backplane, a set of handtools is available allowing each contact on the board to be removed and replaced individually.
Sets of individual loose contacts are available to re-insert.

How to order :

HM2Y197A : extraction tool for individual contacts
HM2Y197B1 : insertion tool for individual shielding contacts
HM2Y197B2 : insertion tool for individual signal contacts

Receptacle repair tooling for removal of complete modules

Description

Removal tool for damaged modules from a printed board. During this process the PC Board is not touched to avoid any cracks and stress in the layers and tracks.
Additional information and instruction sheets are available from FCI.

How to order :

HM2Y236 : repair tool for 5 and 8 row 50 mm female modules

Power & coax contacts repair tooling

Description

For the repair of damaged contacts out of hybrid modules, extraction tools for single contacts are available.
Each contact can be removed and replaced individually.

How to order :

HM2Y197C : repair tool for male connectors
HM2Y197D : repair tool for receptacle connectors

Millipacs® HM

Insertion machines : Impress® 500 series

Description

A complete range of machines is available to install all Millipacs® board connectors. Multifunctional X Y tables allow insertion of headers, shrouds or receptacle modules by quick changeover of the dedicated inserts and PCB supports.
All header and receptacle modules are inserted in a single operation with the same tooling. Insertion of modules with existing customer presses is also possible by adapting the top and bottom mounting bars according to customer requirements.

Features Impress® 500 M

- Insertion force : 25 kN (5625 lbf)
- Board size (1) : 270 mm (10.6”) throat depth
- Max. tool size : 150 mm (5.9”)
- Press cycles per hour (2) : 300

Features Impress® 500 E

- Insertion force : 80 kN (18000 lbf)
- Board size (1) : 720 x 580 mm (28.3”x 22.8”)
- Max. tool size : 255 mm (10”)
- Press cycles per hour (2) : 600

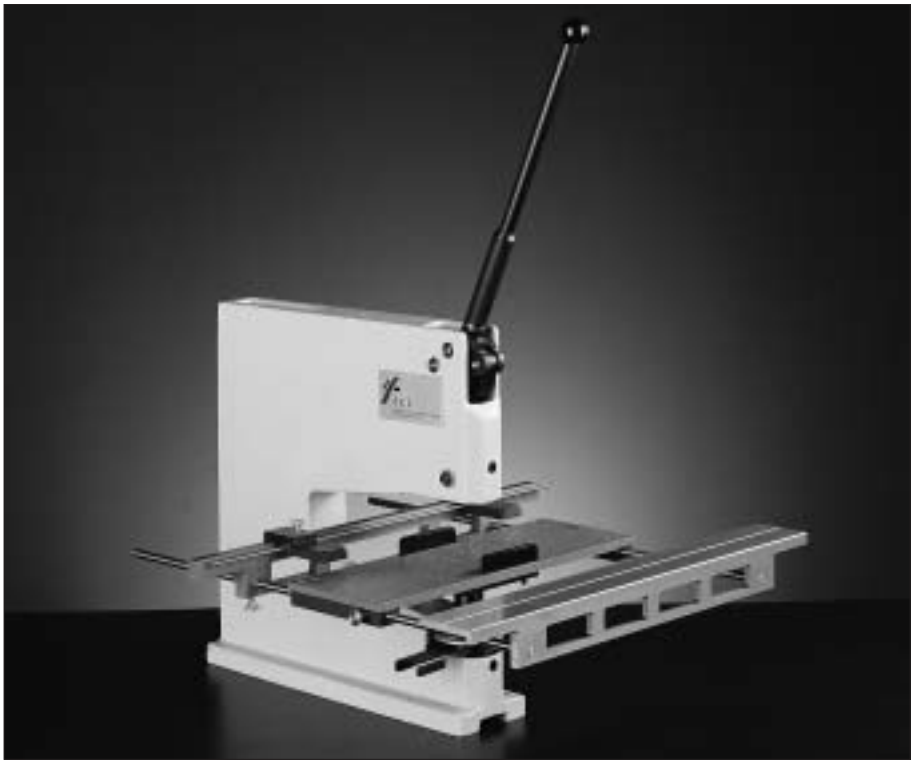

Part number : PAY 245 M

Part number : PAY 284 A2

IMPRESS® is a trademark of FCI or its affiliated companies.

(1) : Board size means maximum backplane size. For maximum daughterboard size, please refer to the specification.
(2) : These capacity figures are only an indication while the real capacity depends on the board and production parameters.

IMPRESS® 500 E Compact

Description

The IMPRESS® 500 E Compact is a desktop version of the IMPRESS® 500 E. This machine is especially designed for quality minded users who do not need the extensive features of the standard IMPRESS® 500 E in terms of board size and maximum insertion force.

Features

- Insertion force : 50 kN (11250 lbf)
- Board size (1) : 600 mm (23.6”) between posts of the H-bridge
- Max. tool size : 255 mm (10”)
- Press cycles per hour (2) : 500

IMPRESS® is a trademark of FCI or its affiliated companies.

Part number : PAY 326

CIP-12K

Description

The CIP-12K is a computer controlled, all electric closed loop servo driven press with two-hand, no tie down actuation. The CIP-12K is able to press connectors at any position along the surface of the press ram. Unique “Teach & Learn” operator friendly software (Patent Pending) ensures fast start-up and low training overhead.

Features

- Insertion force : 53 kN (12,000 lbf)
- Board size : 18” x 36” (457.1 mm x 914.4 mm)
- Press cycles per hour (2) : 600

(1) : Board size means maximum backplane size. For maximum daughterboard size, please refer to the specification.
(2) : These capacity figures are only an indication while the real capacity depends on the board and production parameters.

Millipacs® HM

Insertion machines IMPRESS® 1000 series

Description

This “state of the art” semi-automatic machine consists of a computer controlled X-Y table.
Connectors are placed manually into position on the boards and are then automatically, in sequence, pressed into the boards.

Features and benefits

- User-friendly programming thanks to an advanced man/machine interface in a graphical environment.
- Creating a new program consists in entering connector type, connector location and insertion depth on a host PC.
- The machine is operated by a satellite keyboard. This keyboard activates start, stop and single step cycles.
- Full insertion force monitoring and analysis.

Consult FCI for more information.

IMPRESS® 2000 series

Description

Fully robotic machine with automatic connector and backpanel feeding system for in-line assembly.
Designed for high capacity serial productions.

Consult FCI for more information

IMPRESS® is a trademark of FCI or its affiliated companies.

Millipacs® HM

Insertion tooling :

Description

A complete set of tooling to install all different Millipacs® modules.

Features

- Same insertion units and anvils for non-shielded and shielded modules.
- No limitations in customized arrangements.
- Flat rock design for receptacle modules.

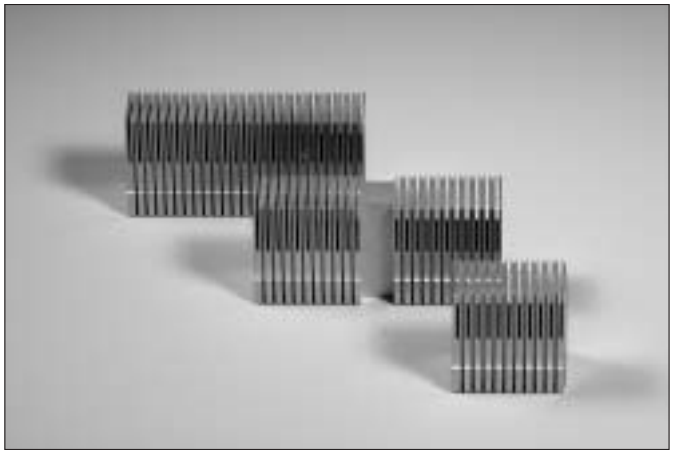

(5 + 2) ROW		IMPRESS 500M			IMPRESS 500E / 500E COMPACT				
					without LMT			with LMT**	
		Anvil	Insert	Push blade	Anvil	Insert	Push blade	Anvil	LMT-blade
MODULES									
A	**male**	PAY245A3	PAY245A20	PAY245A8	PAY307A1	PAY245A20	PAY308A2	PAY307A1	PAY308A16
	female	PAY245A5	-- *	PAY245A8	PAY307A3	--	PAY308A49	PAY307A3	PAY308A49
	shroud	HM2Y196A33	--	PAY245A103	PAY307A89	--	PAY308A87	PAY307A89	PAY308A87
B	**male**	PAY245A3	PAY245A21	PAY245A8	PAY307A1	PAY245A21	PAY308A2	PAY307A1	PAY308A17
	female	PAY245A5	-- *	PAY245A8	PAY307A3	--	PAY308A49	PAY307A3	PAY308A49
	shroud	HM2Y196A33	--	PAY245A103	PAY307A89	--	PAY308A87	PAY307A89	PAY308A87
C / CR	**male**	PAY245A3	PAY245A22	PAY245A8	PAY307A2	PAY245A22	PAY308A2	PAY307A2	PAY308A18
	female	PAY245A5	-- *	PAY245A8	PAY307A3	--	PAY308A49	PAY307A3	PAY308A49
	shroud	HM2Y196A33	--	PAY245A104	PAY307A90	--	PAY308A88	PAY307A90	PAY308A88
B (19 pos.)	**male**	PAY245A3	HM2Y196A30	PAY245A8	PAY307A44	HM2Y196A30	PAY308A2	PAY307A44	PAY308A58
	female	PAY245A5	-- *	PAY245A8	PAY307A44	--	PAY308A68	PAY307A44	PAY308A68
	shroud	HM2Y196A33	--	PAY245A103	PAY307A92	--	PAY308A90	PAY307A92	PAY308A90
B (22 pos.)	**male**	PAY245A3	HM2Y196A29	PAY245A8	PAY307A45	HM2Y196A29	PAY308A2	PAY307A45	PAY308A59
	female	PAY245A5	-- *	PAY245A8	PAY307A45	--	PAY308A67	PAY307A45	PAY308A67
	shroud	HM2Y196A33	--	PAY245A103	PAY307A91	--	PAY308A89	PAY307A91	PAY308A89
AB (25 pos.)	**male**	PAY245A3	PAY245A73	PAY245A8	PAY307A1	PAY245A73	PAY308A2	PAY307A1	PAY308A69
	female	PAY245A5	-- *	PAY245A8	PAY307A3	--	PAY308A49	PAY307A3	PAY308A49
	shroud	HM2Y196A33	--	PAY245A103	PAY307A89	--	PAY308A87	PAY307A89	PAY308A87
AB (22 pos.)	**male**	PAY245A3	PAY245A74	PAY245A8	PAY307A45	PAY245A74	PAY308A2	PAY307A45	PAY308A70
	female	PAY245A5	-- *	PAY245A8	PAY307A45	--	PAY308A67	PAY307A45	PAY308A67
	shroud	HM2Y196A33	--	PAY245A103	PAY307A91	--	PAY308A89	PAY307A91	PAY308A89
AB (19 pos.)	**male**	PAY245A3	PAY245A75	PAY245A8	PAY307A44	PAY245A75	PAY308A2	PAY307A44	PAY308A71
	female	PAY245A5	-- *	PAY245A8	PAY307A44	--	PAY308A68	PAY307A44	PAY308A68
	shroud	HM2Y196A33	--	PAY245A103	PAY307A92	--	PAY308A90	PAY307A92	PAY308A90
M (pre-ass.)	**male**	PAY245A32	PAY245A29	PAY245A8	PAY307A68	PAY245A29	PAY308A2	on request	
	female	PAY245A32	--	PAY245A8	PAY307A68	--	PAY308A49	on request	
L (pre-ass.)	**male**	PAY245A33	PAY245A30	PAY245A8	PAY307A69	PAY245A30	PAY308A2	on request	
	female	PAY245A33	--	PAY245A8	PAY307A69	--	PAY308A49	on request	
N (pre-ass.)	**male**	PAY245A34	PAY245A31	PAY245A8	PAY307A70	PAY245A31	PAY308A2	on request	
	female	PAY245A34	--	PAY245A8	PAY307A70	--	PAY308A49	on request	
M	**shroud**	HM2Y196A33	--	PAY245A103	PAY307A89	--	PAY308A87	PAY307A89	PAY308A87
L	**shroud**	HM2Y196A33	--	PAY245A103	PAY307A89	--	PAY308A87	PAY307A89	PAY308A87
N	**shroud**	HM2Y196A33	--	PAY245A104	PAY307A90	--	PAY308A88	PAY307A90	PAY308A88

(*) : for easy positioning of the connector,use PAY245A6 (zero positioning block)
(**) : not available on IMPRESS 500E COMPACT

Tools for IMPRESS1000 and IMPRESS2000 on request.

Millipacs® HM

(8 + 2) ROW		IMPRESS 500M			IMPRESS 500E / 500E COMPACT				
					without LMT			with LMT**	
		Anvil	Insert	Push blade	Anvil	Insert	Push blade	Anvil	LMT-blade
MODULES									
D	**male**	PAY245A90	PAY245A13	PAY245A16	PAY307A40	PAY245A13	PAY308A72	PAY307A40	PAY308A74
	female	PAY245A91	-- *	PAY245A16	PAY307A71	--	PAY308A30	PAY307A71	PAY308A30
	shroud	PAY245A100	--	PAY245A101	PAY307A87	--	PAY308A85	PAY307A87	PAY308A85
E	**male**	PAY245A90	PAY245A12	PAY245A16	PAY307A40	PAY245A12	PAY308A72	PAY307A40	PAY308A75
	female	PAY245A91	-- *	PAY245A16	PAY307A71	--	PAY308A30	PAY307A71	PAY308A30
	shroud	PAY245A100	--	PAY245A101	PAY307A87	--	PAY308A85	PAY307A87	PAY308A85
F / FR	**male**	PAY245A90	PAY245A14	PAY245A16	PAY307A41	PAY245A14	PAY308A72	PAY307A41	PAY308A76
	female	PAY245A91	-- *	PAY245A16	PAY307A74	--	PAY308A73	PAY307A74	PAY308A73
	shroud	PAY245A100	--	PAY245A102	PAY307A88	--	PAY308A86	PAY307A88	PAY308A86
DE (25 pos.)	**male**	PAY245A90	PAY245A106	PAY245A16	PAY307A40	PAY245A106	PAY308A72	PAY307A40	PAY308A103
	female	PAY245A91	-- *	PAY245A16	PAY307A71	--	PAY308A30	PAY307A71	PAY308A30
	shroud	PAY245A100	--	PAY245A101	PAY307A87	--	PAY308A85	PAY307A87	PAY308A85
DE (22 pos.)	**male**	PAY245A110	PAY245A107	PAY245A16	PAY307A43	PAY245A107	PAY308A72	PAY307A43	PAY308A104
	female	PAY245A91	-- *	PAY245A16	PAY307A76	--	PAY308A106	PAY307A76	PAY308A106
	shroud	PAY245A100	--	PAY245A101	PAY307A97	--	PAY308A108	PAY307A97	PAY308A108
DE (19 pos.)	**male**	PAY245A109	PAY245A108	PAY245A16	PAY307A42	PAY245A108	PAY308A72	PAY307A42	PAY308A105
	female	PAY245A91	-- *	PAY245A16	PAY307A75	--	PAY308A107	PAY307A75	PAY308A107
	shroud	PAY245A100	--	PAY245A101	PAY307A96	--	PAY308A109	PAY307A96	PAY308A106

(*) : for easy positioning of the connector,use PAY245A6 (zero positioning block)
(**) : not available on IMPRESS 500E COMPACT

Tools for IMPRESS1000 and IMPRESS2000 on request.

IDC termination tooling

Description

A full range of termination tooling is available for low, middle and high volume production.
Contact FCI for advice & support on your specific requirements.

Part nr	repair tooling	Handtooling	Cable terminator	Set for cable terminator	Handtool for crimping	Die set for handpress	Handpress
HM2C01D0C010N9	BPY75D17	BPY13817	BPY6736PC1UK	BPY6736A5			
HM2C01D2C010N9							
HM2C06D0C010N9							
HM2C06D2C010N9							
HM2C09D0C011N9	BPY75D25	BPY13830	BPY6736PC1UK	BPY6736A6	HM2Y289A1	HM2Y312A1	HM2Y291
HM2C09D2C011N9					HM2Y289A1	HM2Y312A1	HM2Y291
HM2C10D0C011N9					HM2Y289A2	HM2Y312A2	HM2Y291
HM2C10D2C011N9					HM2Y289A2	HM2Y312A2	HM2Y291
HM2C11D0C011N9					HM2Y289A3	HM2Y312A3	HM2Y291
HM2C11D2C011N9					HM2Y289A3	HM2Y312A3	HM2Y291
HM2C12D0C011N9					HM2Y289A4	HM2Y312A4	HM2Y291
HM2C12D2C011N9					HM2Y289A4	HM2Y312A4	HM2Y291

Plated through hole definitions

PLATED THROUGH HOLE SIGNAL CONTACT

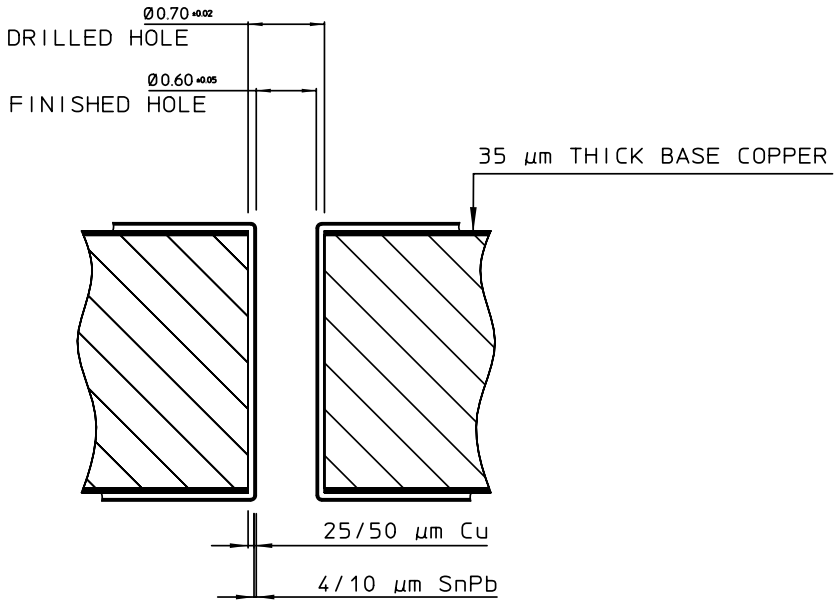

PLATED THROUGH HOLE POWER CONTACT

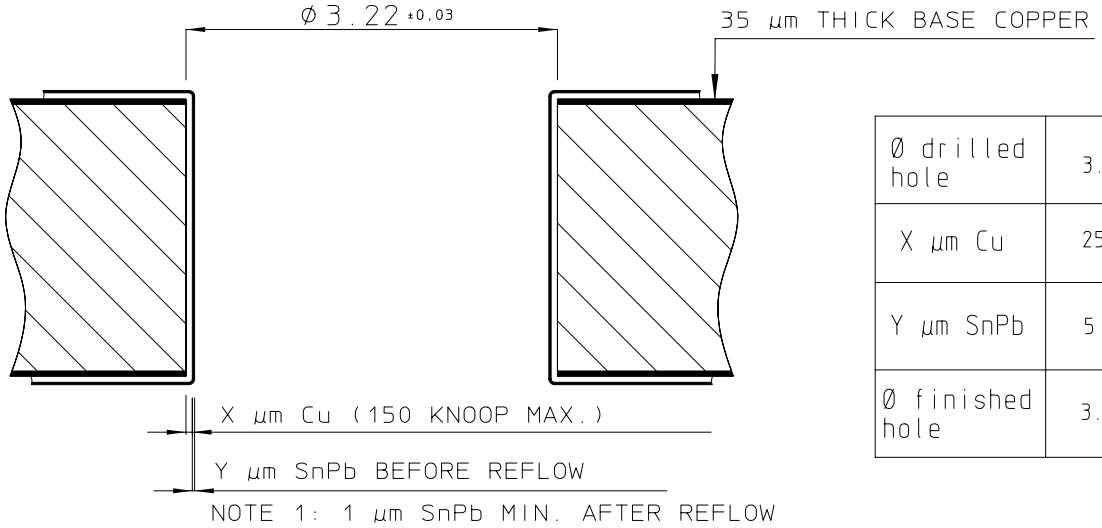

Ø drilled hole	3.19/3.25
X µm Cu	25 µm min
Y µm SnPb	5 µm min.
Ø finished hole	3.02/3.20

Backplane layout

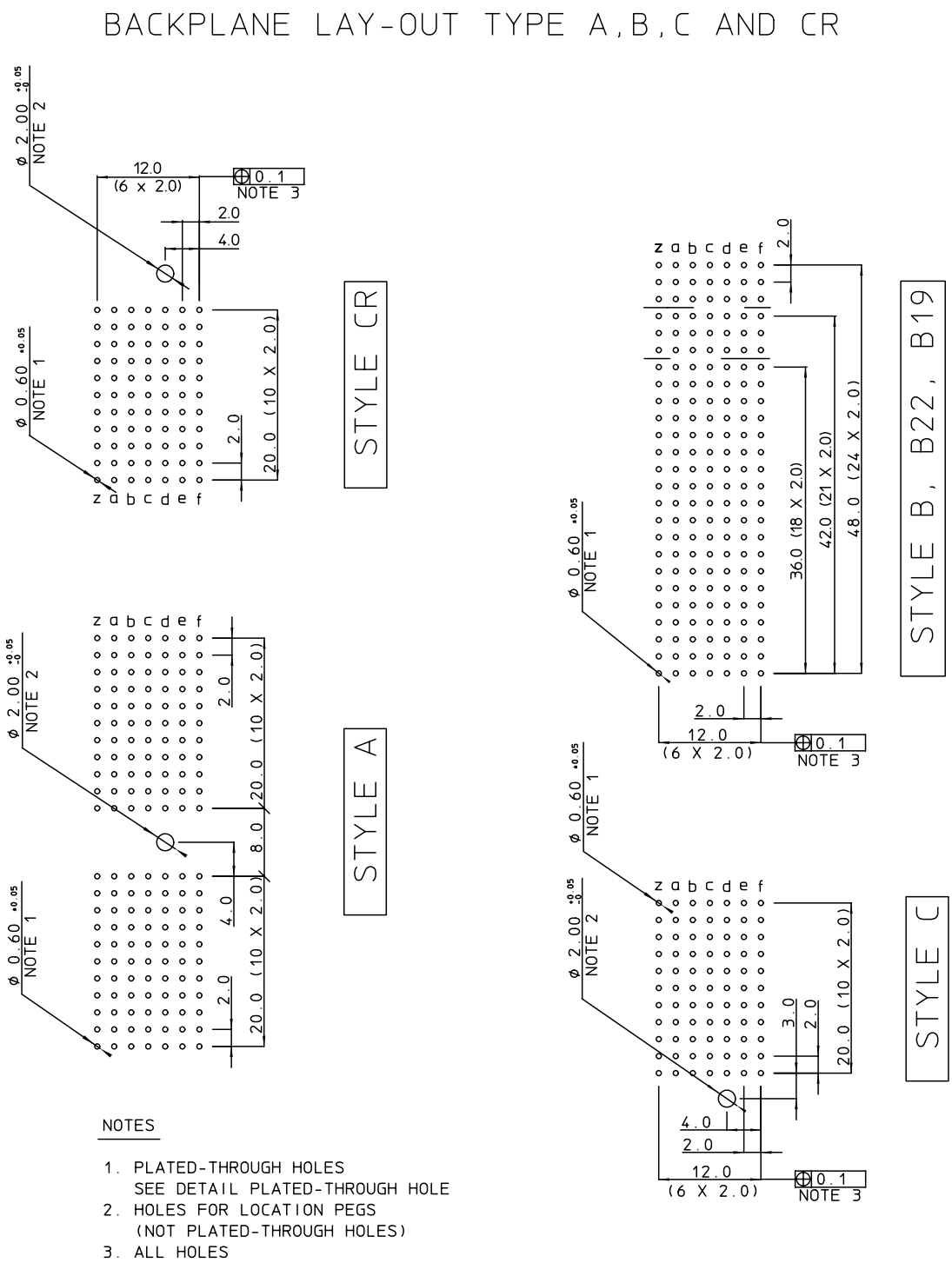

PCB layout

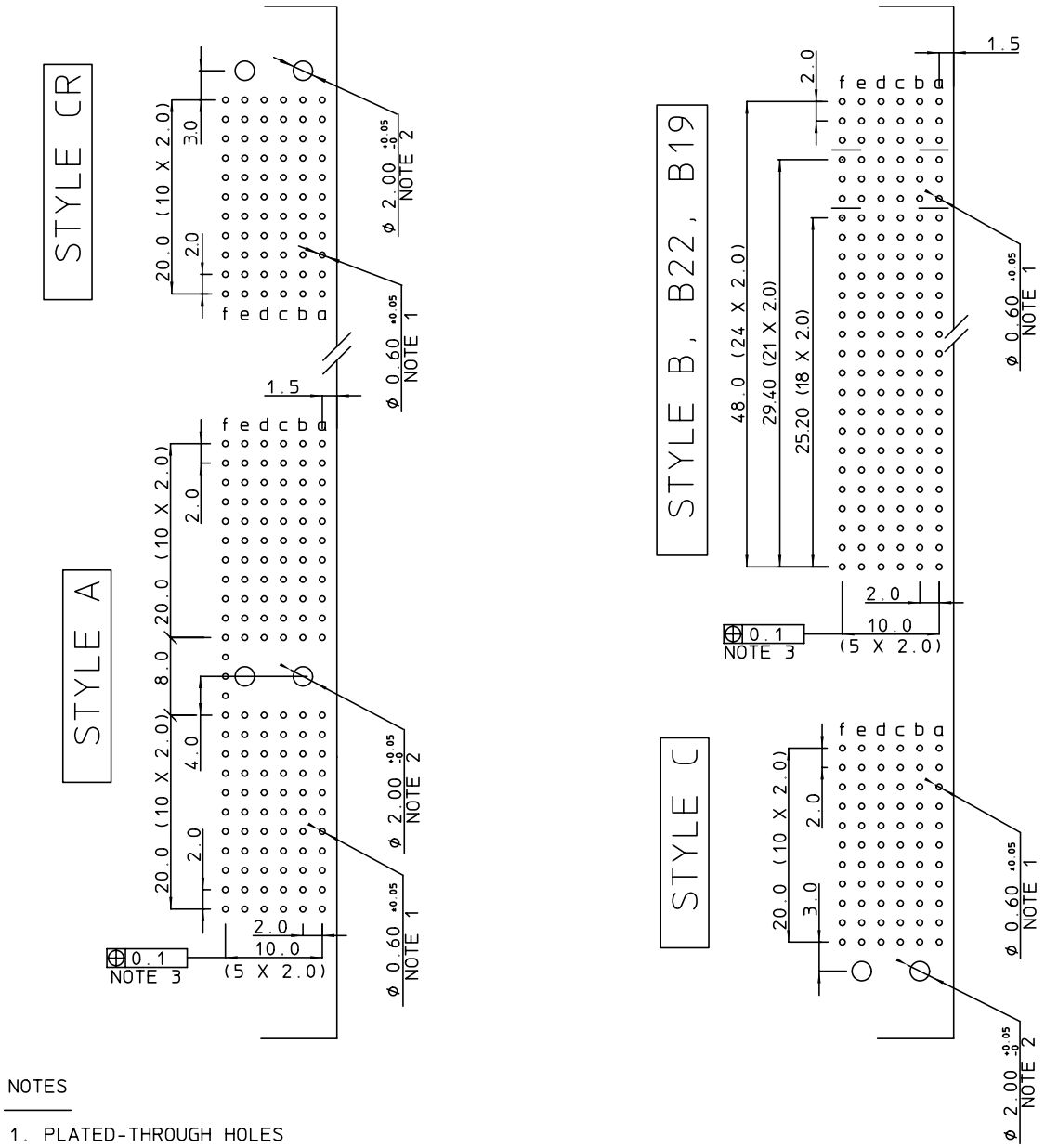

NOTES

1. PLATED-THROUGH HOLES
   SEE DETAIL PLATED-THROUGH HOLE
2. HOLES FOR LOCATION PEGS
   (NOT PLATED-THROUGH)
3. ALL HOLES

Backplane and PCB layout

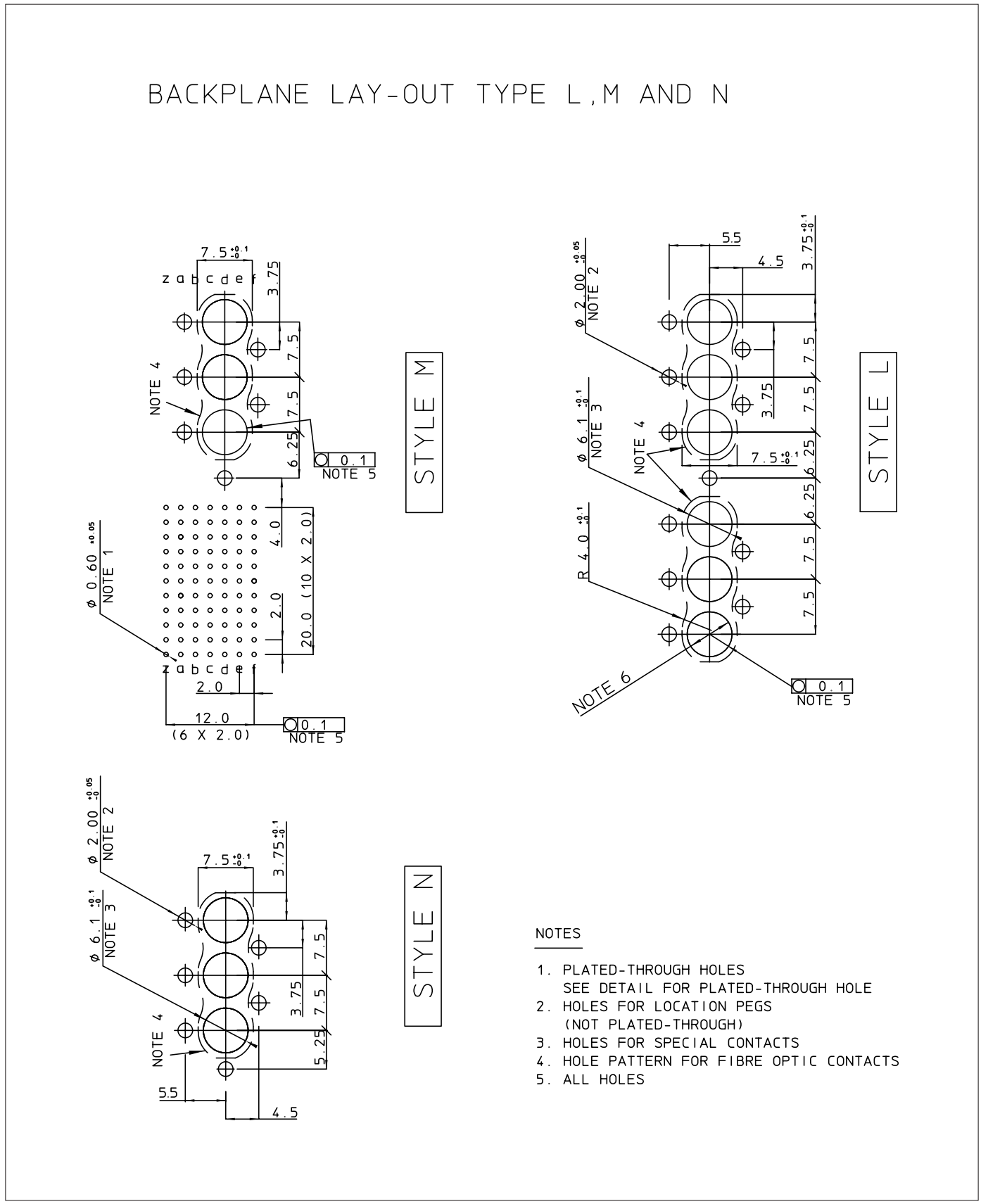

Backplane and PCB layout

PCB LAY-OUT FOR TYPE L, M AND N

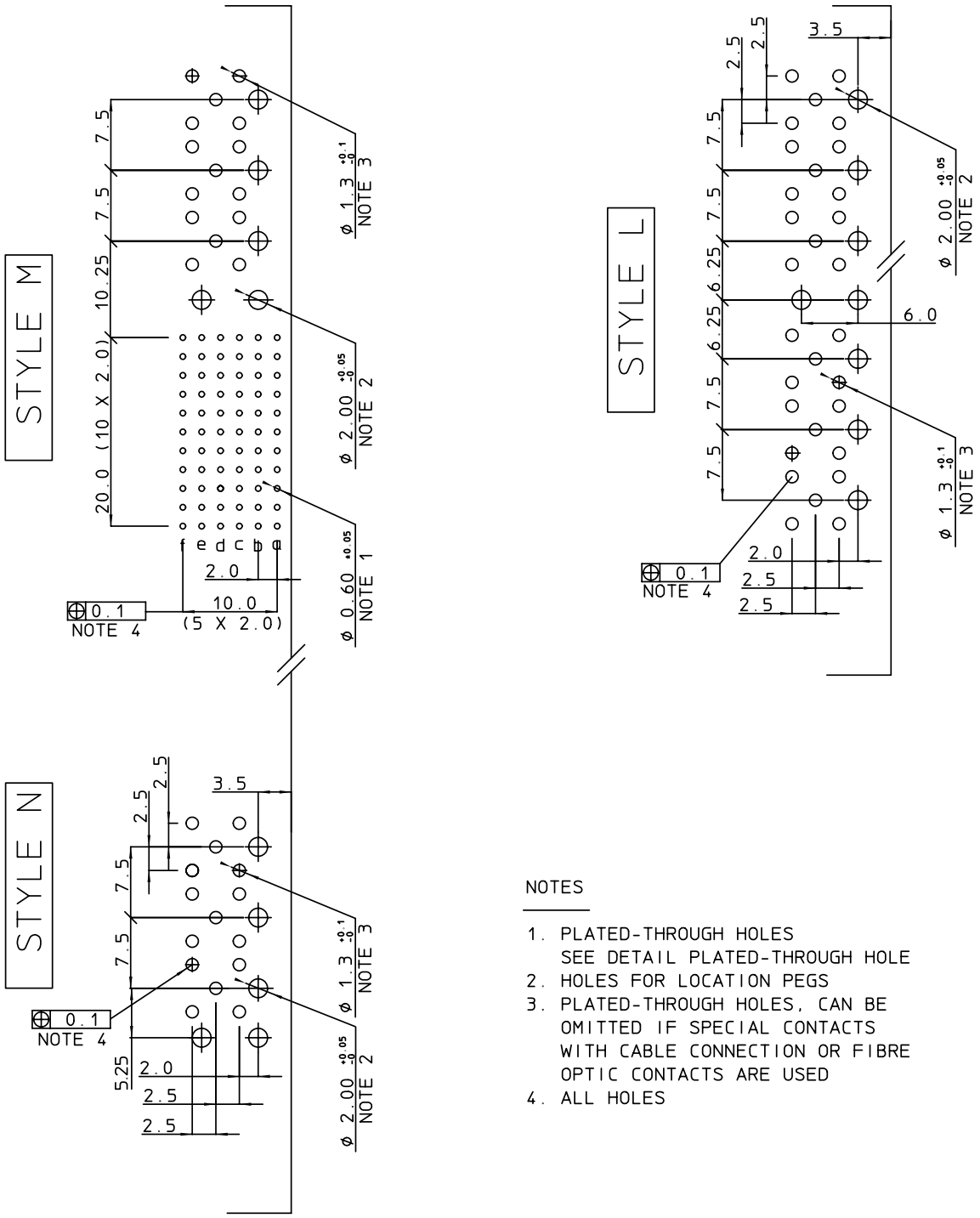

NOTES

1. PLATED-THROUGH HOLES
   SEE DETAIL PLATED-THROUGH HOLE
2. HOLES FOR LOCATION PEGS
3. PLATED-THROUGH HOLES, CAN BE
   OMITTED IF SPECIAL CONTACTS
   WITH CABLE CONNECTION OR FIBRE
   OPTIC CONTACTS ARE USED
4. ALL HOLES

Backplane and PCB layout

PCB LAY-OUT FOR TYPE D, E, F AND FR

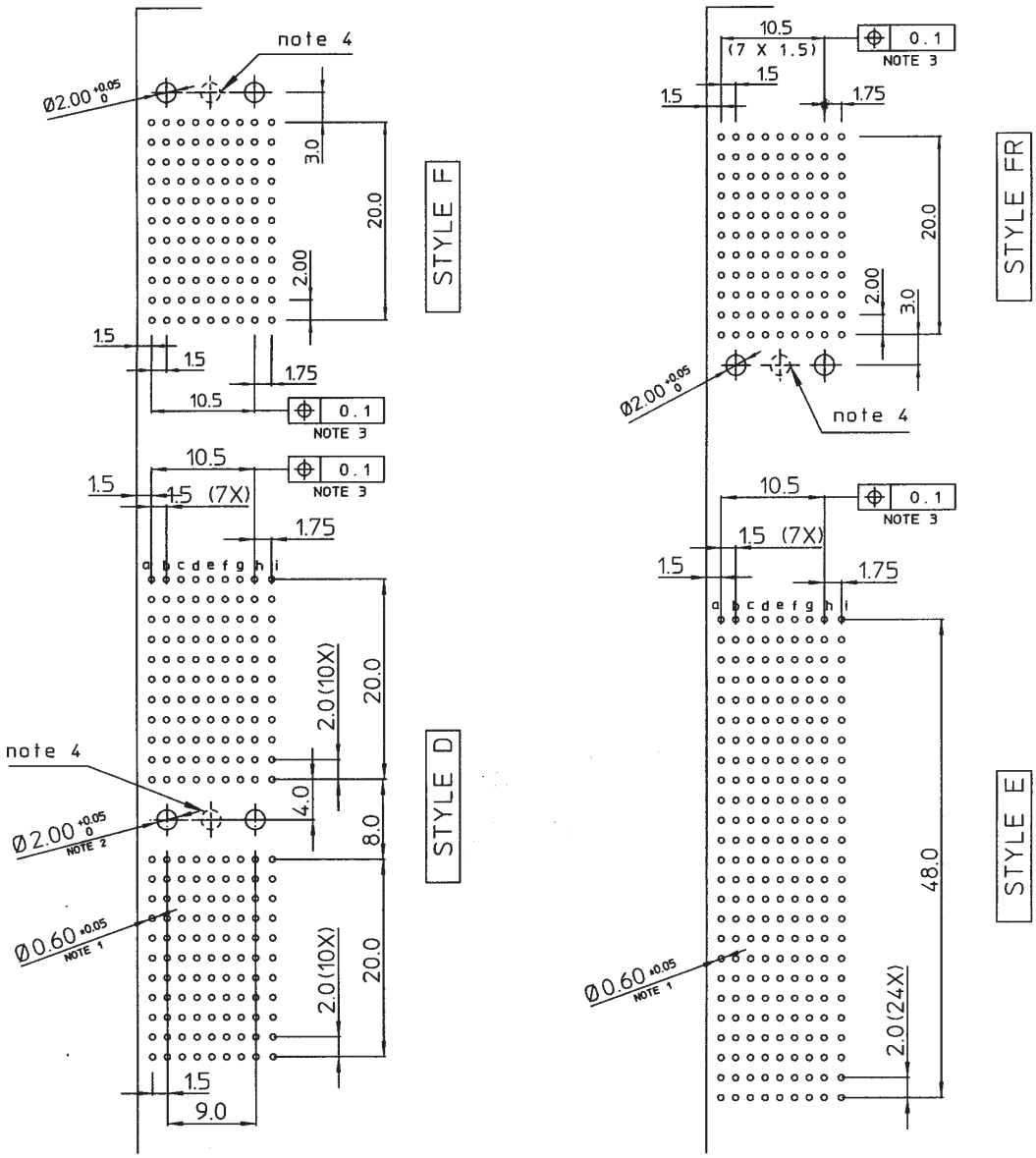

NOTES

1. PLATED-THROUGH HOLES
   SEE DETAIL PLATED-THROUGH HOLE
2. HOLES FOR LOCATION PEGS
3. PLATED-THROUGH HOLES, CAN BE OMITTED IF SPECIAL CONTACTS WITH CABLE CONNECTION OR FIBRE OPTIC CONTACTS ARE USED
4. ALL HOLES

Backplane and PCB layout

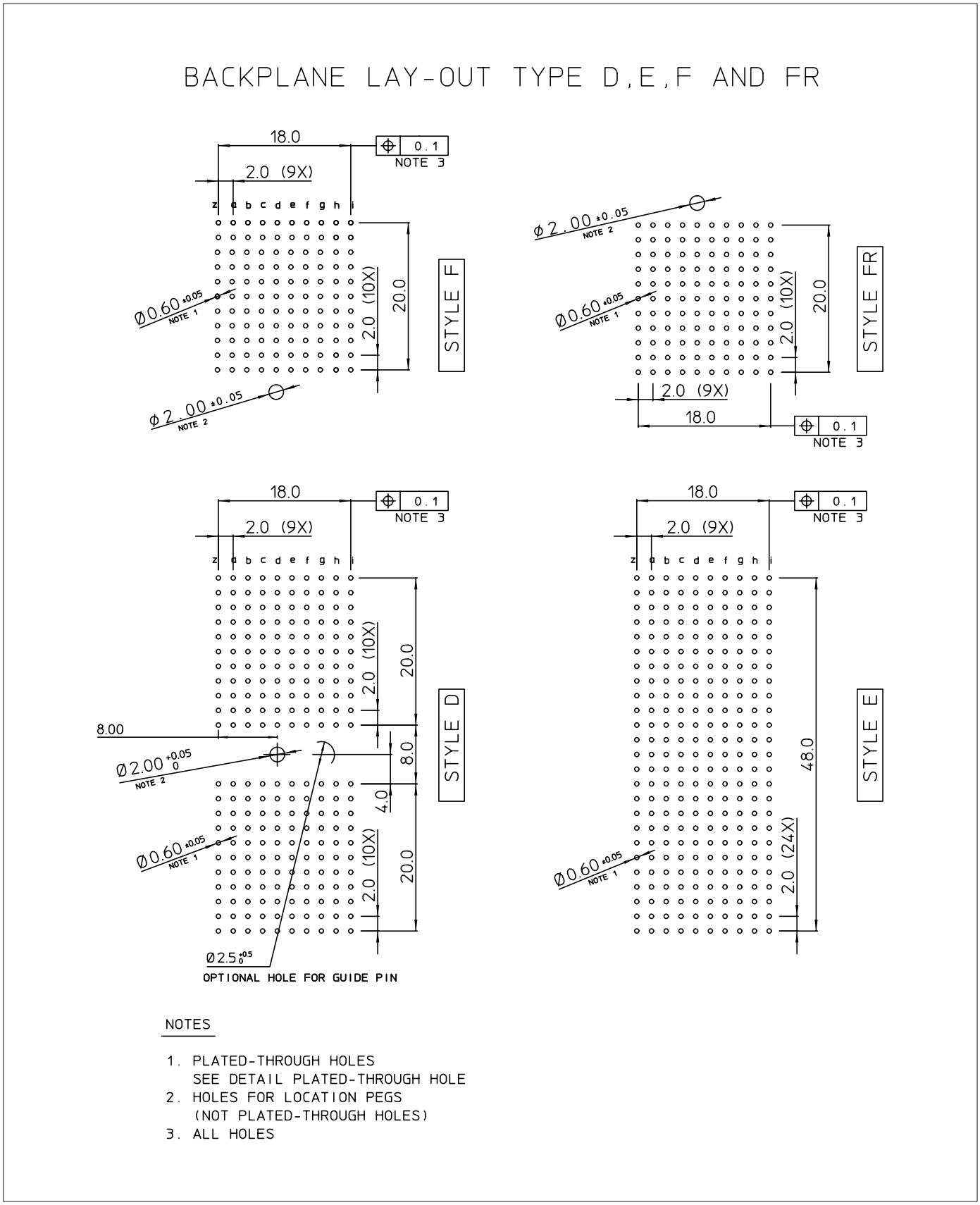

Part number list

description	partnumber	page
type A header	HM2P07PD5110N9	13
type A header	HM2P07PD5111N9	13
type A header	HM2P07PK5110GF	13
type A header	HM2P07PK5111GF	13
type B header	HM2P08PD5110N9	14
type B header	HM2P08PD5111N9	14
type B header	HM2P08PK5110GF	14
type B header	HM2P08PK5111GF	14
type B22 header	HM2P70PD5110N9	15
type B22 header	HM2P70PD5111N9	15
type B22 header	HM2P70PK5110GF	15
type B22 header	HM2P70PK5111GF	15
type B19 header	HM2P71PD5110N9	16
type B19 header	HM2P71PD5111N9	16
type B19 header	HM2P71PK5110GF	16
type B19 header	HM2P71PK5111GF	16
type AB header	HM2P65PD5110N9	17
type AB header	HM2P65PD5111N9	17
type AB header	HM2P65PK5110GF	17
type AB header	HM2P65PK5111GF	17
type AB22 header	HM2P66PD5110N9	18
type AB22 header	HM2P66PD5111N9	18
type AB22 header	HM2P66PK5110GF	18
type AB22 header	HM2P66PK5111GF	18
type AB19 header	HM2P67PD5110N9	19
type AB19 header	HM2P67PD5111N9	19
type AB19 header	HM2P67PK5110GF	19
type AB19 header	HM2P67PK5111GF	19
type C header	HM2P09PD5110N9	20
type C header	HM2P09PD5111N9	20
type C header	HM2P09PK5110GF	20
type C header	HM2P09PK5111GF	20
type CR header	HM2P80PD5110N9	21
type CR header	HM2P80PD5111N9	21
type CR header	HM2P80PK5110GF	21
type CR header	HM2P80PK5111GF	21
type L hybrid body	HM2P10P1	22
type M header	HM2P11PD5110N9	23
type M header	HM2P11PD5111N9	23
type M header	HM2P11PK5110GF	23
type M header	HM2P11PK5111GF	23
type N hybrid body	HM2P12P1	24
type D header	HM2P87PD8110N9	25
type D header	HM2P87PD8111N9	25
type D header	HM2P87PK8110GF	25
type D header	HM2P87PK8111GF	25
type E header	HM2P88PD8110N9	26
type E header	HM2P88PD8111N9	26
type E header	HM2P88PK8110GF	26
type E header	HM2P88PK8111GF	26
type DE header	HM2P95PD8110N9	27
type DE header	HM2P95PD8111N9	27
type DE header	HM2P95PK8110GF	27
type DE header	HM2P95PK8111GF	27
type F header	HM2P89PD8110N9	28
type F header	HM2P89PD8111N9	28
type F header	HM2P89PK8110GF	28
type F header	HM2P89PK8111GF	28
type FR header	HM2P82PD8110N9	29
type FR header	HM2P82PD8111N9	29
type FR header	HM2P82PK8110GF	29
type FR header	HM2P82PK8111GF	29
type A receptacle	HM2R01PA5100N9	30
type A receptacle	HM2R01PA5108N9	30
type A receptacle	HM2R10PA5100N9	30
type A receptacle	HM2R10PA5108N9	30
type B receptacle	HM2R02PA5100N9	31
type B receptacle	HM2R02PA5108N9	31
type B22 receptacle	HM2R70PA5100N9	32
type B22 receptacle	HM2R70PA5108N9	32
type B19 receptacle	HM2R71PA5100N9	33
type B19 receptacle	HM2R71PA5108N9	33
type AB receptacle	HM2R65PA5108N9	34
type AB receptacle	HM2R65PA5108N9	34
type AB22 receptacle	HM2R66PA5100N9	35
type AB22 receptacle	HM2R66PA5108N9	35
type AB19 receptacle	HM2R67PA5100N9	36
type AB19 receptacle	HM2R67PA5108N9	36
type C receptacle	HM2R03PA5100N9	37
type C receptacle	HM2R03PA5108N9	37
type C receptacle	HM2R30PA5100N9	37
type C receptacle	HM2R30PA5108N9	37
type CR receptacle	HM2R20PA5100N9	38
type CR receptacle	HM2R20PA5108N9	38
type CR receptacle	HM2R21PA5100N9	38
type CR receptacle	HM2R21PA5108N9	38
type L hybrid body	HM2R04P1	39
type M receptacle	HM2R05PA5100N9	40
type M receptacle	HM2R05PA5108N9	40
type M receptacle	HM2R50PA5100N9	40
type M receptacle	HM2R50PA5108N9	40
type N hybrid body	HM2R06P1	41
type D receptacle	HM2R87PA8100N9	42
type D receptacle	HM2R87PA8108N9	42
type D receptacle	HM2R81PA8100N9	42
type D receptacle	HM2R81PA8108N9	42
type E receptacle	HM2R88PA8100N9	43
type E receptacle	HM2R88PA8108N9	43
type DE receptacle	HM2R95PA8100N9	44
type DE receptacle	HM2R95PA8108N9	44
type F receptacle	HM2R89PA8100N9	45
type F receptacle	HM2R89PA8108N9	45
type F receptacle	HM2R83PA8100N9	45
type F receptacle	HM2R83PA8108N9	45
type FR receptacle	HM2R82PA8100N9	46
type FR receptacle	HM2R82PA8108N9	46
type FR receptacle	HM2R90PA8100N9	46
type FR receptacle	HM2R90PA8108N9	46
type A lower shield	HM2LS22A	47
type B lower shield	HM2LS25A	47
type B22 lower shield	HM2LS70A	47
type B19 lower shield	HM2LS71A	47
type AB lower shield	HM2LS22A	47
type AB22 lower shield	HM2LS66A	47
type AB19 lower shield	HM2LS67A	47
type C lower shield	HM2LS11A	47
type CR lower shield	HM2LS11A	47
type M lower shield	HM2LS11A	47
type D lower shield	HM2LS22A8	47
type E lower shield	HM2LS25A8	47
type DE lower shield	HM2LS22A8	47
type F lower shield	HM2LS11A8	47
type FR lower shield	HM2LS11A8	47
type A female straight	HM2S10PE5100N9	48
type A female straight	HM2S10PE5101N9	48
type A female straight	HM2S10PK5100GF	48
type A female straight	HM2S10PK5101GF	48
type B female straight	HM2S02PE5100N9	49
type B female straight	HM2S02PE5101N9	49
type B female straight	HM2S02PK5100GF	49
type B female straight	HM2S02PK5101GF	49
type B22 female straight	HM2S70PE5100N9	50
type B22 female straight	HM2S70PE5101N9	50
type B22 female straight	HM2S70PK5100GF	50
type B22 female straight	HM2S70PK5101GF	50
type B19 female straight	HM2S71PE5100N9	51
type B19 female straight	HM2S71PE5101N9	51
type B19 female straight	HM2S71PK5100GF	51
type B19 female straight	HM2S71PK5101GF	51
type C female straight	HM2S30PE5100N9	52
type C female straight	HM2S30PE5101N9	52
type C female straight	HM2S30PK5100GF	52
type C female straight	HM2S30PK5101GF	52
type A male right angle	HM2J07PE5110N9	53
type A male right angle	HM2J07PE5118N9	53
type B male right angle	HM2J08PE5110N9	54
type B male right angle	HM2J08PE5118N9	54
type B22 male right angle	HM2J70PE5110N9	55
type B22 male right angle	HM2J70PE5118N9	55
type B19 male right angle	HM2J71PE5110N9	56
type B19 male right angle	HM2J71PE5118N9	56
type CA male right angle	HM2J09PE5110N9	57
type CA male right angle	HM2J09PE5118N9	57
10 pos. LF non shielded cable c.	HM2C06D0C010N9	58
10 pos. LF non shielded cable c.	HM2C06D2C010N9	58
20 pos. LF non shielded cable c.	HM2C01D0C010N9	58
20 pos. LF non shielded cable c.	HM2C01D2C010N9	58
10 pos. LF shielded cable c.	HM2C09D0C011N9	59
10 pos. LF shielded cable c.	HM2C09D2C011N9	59
20 pos. LF shielded cable c.	HM2C10D0C011N9	59
20 pos. LF shielded cable c.	HM2C10D2C011N9	59
30 pos. LF shielded cable c.	HM2C11D0C011N9	59
30 pos. LF shielded cable c.	HM2C11D2C011N9	59
40 pos. LF shielded cable c.	HM2C12D0C011N9	59
40 pos. LF shielded cable c.	HM2C12D2C011N9	59
5 row board to board shrouds	HM2H**P1	60
cable to board shrouds	HM2H**P1	62
cable locking key	HM2LK1	62
8 row board to board shrouds	HM2H**P1	63
male ESD, guiding hardware	HM2G01	64
female ESD, guiding hardware	HM2G02	64
power contacts		65
coax contacts		70
male coding devices	HM2DK****P	72
female coding devices	HM2DK****R	72
tooling		73

U.S.A. Tel.: (800) 237-2374; 717-938-7200
Canada Tel.: 905-826-9810
Europe Tel.: 31-73-6206-911
Asia/Pacific Tel.: 65-549-6666

An Areva Company © FCI 2002

950568-001 6/02

http://www.fciconnect.com

Общество с ограниченной ответственностью «МосЧип» ИНН 7719860671 / КПП 771901001
Адрес: 105318, г.Москва, ул.Щербаковская д.3, офис 1107

Данный компонент на территории Российской Федерации

Вы можете приобрести в компании MosChip.

Для оперативного оформления запроса Вам необходимо перейти по данной ссылке:

http://moschip.ru/get-element

Вы можете разместить у нас заказ для любого Вашего проекта, будь то серийное производство или разработка единичного прибора.

В нашем ассортименте представлены ведущие мировые производители активных и пассивных электронных компонентов.

Нашей специализацией является поставка электронной компонентной базы двойного назначения, продукции таких производителей как XILINX, Intel (ex.ALTERA), Vicor, Microchip, Texas Instruments, Analog Devices, Mini-Circuits, Amphenol, Glenair.

Сотрудничество с глобальными дистрибьюторами электронных компонентов, предоставляет возможность заказывать и получать с международных складов практически любой перечень компонентов в оптимальные для Вас сроки.

На всех этапах разработки и производства наши партнеры могут получить квалифицированную поддержку опытных инженеров.

Система менеджмента качества компании отвечает требованиям в соответствии с ГОСТ Р ИСО 9001, ГОСТ РВ 0015-002 и ЭС РД 009

Офис по работе с юридическими лицами:

105318, г.Москва, ул.Щербаковская д.3, офис 1107, 1118, ДЦ «Щербаковский»

Телефон: +7 495 668-12-70 (многоканальный)

Факс: +7 495 668-12-70 (доб.304)

E-mail: info@moschip.ru

Skype отдела продаж:
moschip.ru
moschip.ru_4
moschip.ru_6
moschip.ru_9