THIS DRAWING IS UNPUBLISHED. RELEASED FOR PUBLICATION – , – .
© COPYRIGHT – By – ALL RIGHTS RESERVED.

REVISIONS

P	LTR	DESCRIPTION	DATE	DWN	APVD
	D	ECR–16–014363	11OCT2016	FL	SY

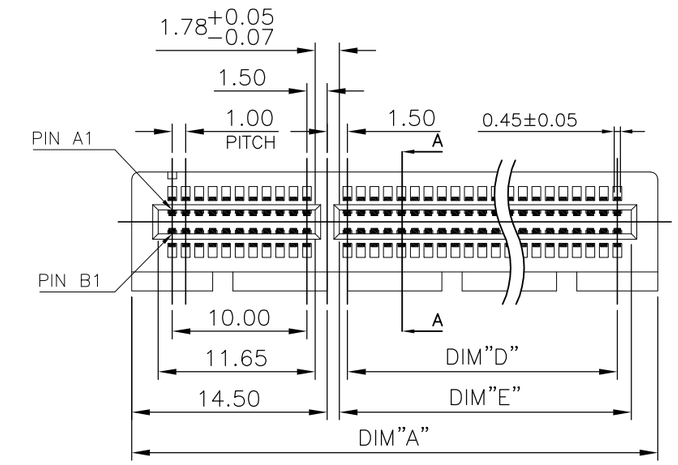

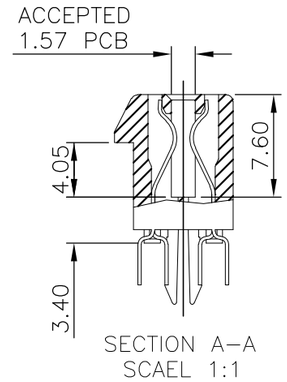

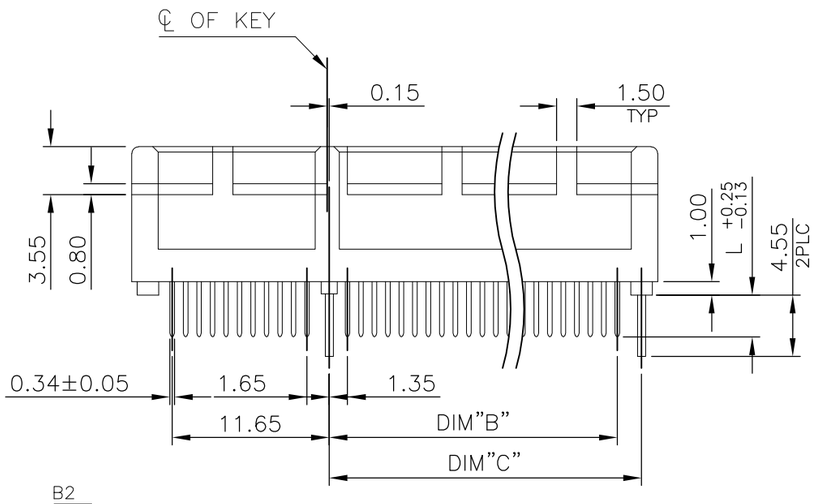

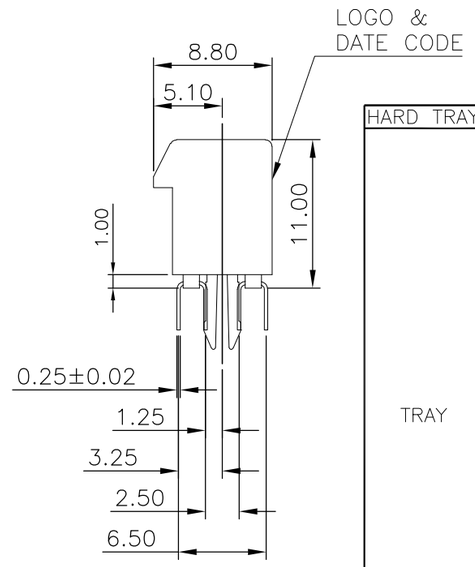

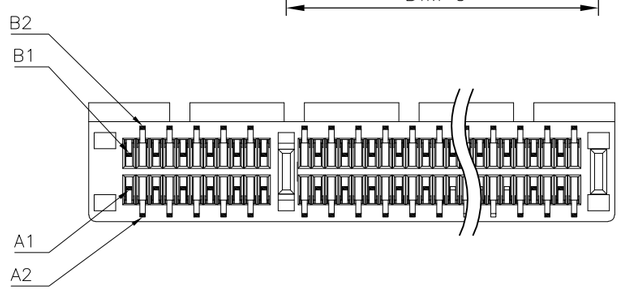

NOTE:

1. MATERIAL:
   HOUSING (SEE TABLE): PA46 OR PA9T, UL94 V–0, COLOR: BLACK.
   CONTACTS: PHOSPHOR BRONZE.
   BOARDLOCK: BRASS.
2. FINISH:
   2.1 CONTACTS: (SEE TABLE) GOLD PLATED ON CONTACT AREA,
   2.54um [100u"] MIN. MATTE–TIN ON SOLDER TAIL,
   WITH ENTIRE CONTACT UNDERPLATED 1.27um [50u"] MIN. NICKEL.
   2.2 BOARDLOCK: 2.54um [100u"] MATTE–TIN PLATING ALL OVER
   NICKEL 1.27um[50u"] MIN. UNDERPLATED OVERALL.
3. WAVE SOLDER CAPABLE TO 265°C MAX. PER TE SPEC. 109–202, CONDITION B.
4. WEIGHT:
   36 POS.: 2.55 GRAMS
   64 POS.: 3.90 GRAMS
   98 POS.: 5.50 GRAMS
   164 POS.: 8.80 GRAMS
5. REFLOW SOLDER CAPABLE TO 260°C PER TE SPEC. TEC–109–201, CONDITION B.

PACKAGING	SOLDER CAPACITY	HOUSING MATERIAL	DIM L	GOLD PLATING	DIM E	DIM D	DIM C	DIM B	DIM A	POS.	PART NUMBER
HARD TRAY	NOTE 3 & 5	PA9T	2.30	0.381μm[15μ"] MIN.	71.65	70.0	73.15	71.35	89.0	164	6– –2
											5– –2
			3.10	0.762μm[30μ"] MIN.							4– –6
				0.381μm[15μ"] MIN.							4– –5
				GOLD FLASH							4– –4
			2.30	0.762μm[30μ"] MIN.							4– –3
				0.381μm[15μ"] MIN.							4– –2
				GOLD FLASH							4– –1
TRAY	NOTE 3	PA46	3.10	0.762μm[30μ"] MIN.	38.65	37.0	40.15	38.35	56.0	98	3– –6
				0.381μm[15μ"] MIN.							3– –5
				GOLD FLASH							3– –4
			2.30	0.762μm[30μ"] MIN.							3– –3
				0.381μm[15μ"] MIN.							3– –2
				GOLD FLASH							3– –1
			3.10	0.762μm[30μ"] MIN.	21.65	20.0	23.15	21.35	39.0	64	2– –6
				0.381μm[15μ"] MIN.							2– –5
				GOLD FLASH							2– –4
			2.30	0.762μm[30μ"] MIN.							2– –3
				0.381μm[15μ"] MIN.							2– –2
				GOLD FLASH							2– –1
			3.10	0.762μm[30μ"] MIN.	7.65	6.0	9.15	7.35	25.0	36	1– –6
				0.381μm[15μ"] MIN.							1– –5
				GOLD FLASH							1– –4
			2.30	0.762μm[30μ"] MIN.							1– –3
				0.381μm[15μ"] MIN.							1– –2
				GOLD FLASH							1–1775801–1

THIS DRAWING IS A CONTROLLED DOCUMENT.

DIMENSIONS: mm

TOLERANCES UNLESS OTHERWISE SPECIFIED:
0 PLC ± –
1 PLC ± 0.3
2 PLC ± 0.2
3 PLC ± 0.15
4 PLC ± –
ANGLES ± 3°

MATERIAL: SEE NOTE
FINISH: SEE NOTE

DWN B. HSING 21MAY2009
CHK S. CHIEN 21MAY2009
APVD W. KODAMA 21MAY2009
PRODUCT SPEC 108–57375
APPLICATION SPEC —
WEIGHT 0

TE Connectivity

NAME
PCI EXPRESS CARD EDGE CONNECTOR
VERTICAL, DIP TYPE,(BOARD–LOCK FUNCTION)
—

SIZE	CAGE CODE	DRAWING NO	RESTRICTED TO
A3	00779	C–1775801	—

CUSTOMER DRAWING | SCALE 1:1 | SHEET 1 OF 4 | REV D

THIS DRAWING IS UNPUBLISHED. RELEASED FOR PUBLICATION -,- .
© COPYRIGHT - By - ALL RIGHTS RESERVED.

REVISIONS

P	LTR	DESCRIPTION	DATE	DWN	APVD
	-	SEE SHEET 1	-	-	-

1. NO TIE BAR PERMITTED FROM CARD EDGE TO LEADING EDGE OF PAD FOR PINS A1 AND "K"
2. CHAMFER EDGE MUST BE FREE OF CUTTING BURRS

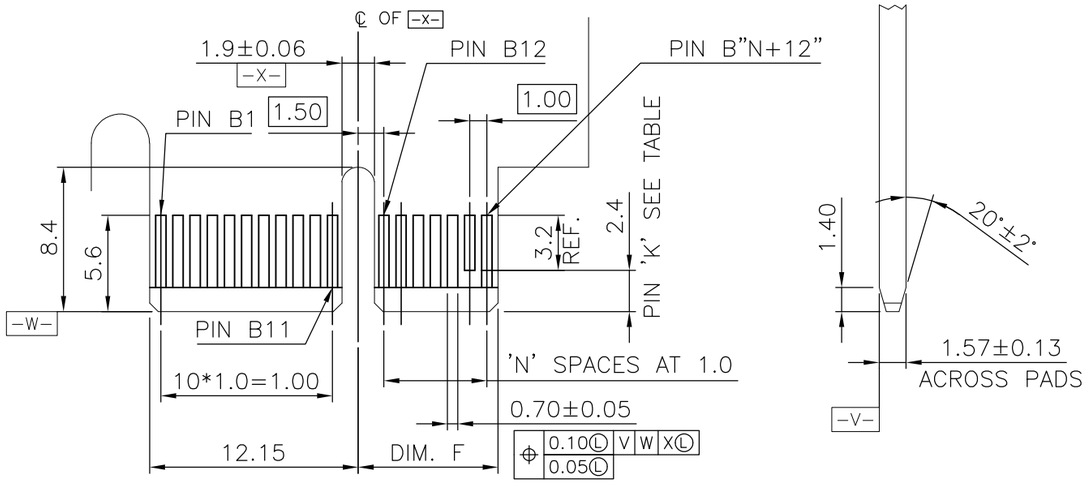

← I/O PANEL DIRECTION

PRIMARY (COMPONENT) SIDE

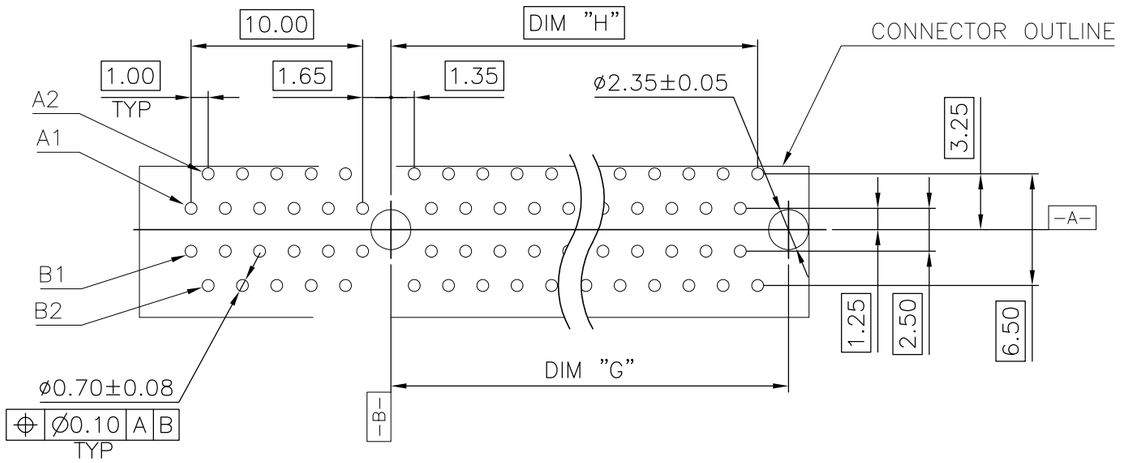

RECOMMENDED PCB LAYOUT

TOLERANCE: ±0.05
DIM.L=3.1mm THICKNESS: 2.4mm
DIM.L=2.3mm THICKNESS: 1.6mm

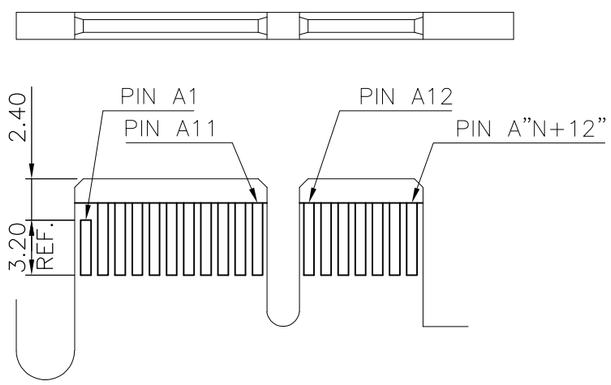

SECONDARY (SOLDER) SIDE

POS.	N	DIM. F	DIM. G	DIM. H	"K"
36	6	8.15	9.15	7.35	B17
64	20	22.15	23.15	21.35	B17,B31
98	37	39.15	40.15	38.35	B17,B31,B48
164	70	72.15	73.15	71.35	B17,B31,B48,B81

THIS DRAWING IS A CONTROLLED DOCUMENT.

DIMENSIONS: mm

TOLERANCES UNLESS OTHERWISE SPECIFIED:

0 PLC	± -
1 PLC	± 0.3
2 PLC	± 0.2
3 PLC	± 0.15
4 PLC	± -
ANGLES	± 3°

MATERIAL: -

FINISH: -

DWN B. HSING 21MAY2009
CHK S. CHIEN 21MAY2009
APVD W. KODAMA 21MAY2009
PRODUCT SPEC —
APPLICATION SPEC —
WEIGHT 0

TE Connectivity

NAME: PCI EXPRESS CARD EDGE CONNECTOR VERTICAL, DIP TYPE,(BOARD-LOCK FUNCTION) —

SIZE	CAGE CODE	DRAWING NO	RESTRICTED TO
A3	00779	C-1775801	—

CUSTOMER DRAWING

SCALE	SHEET	REV
1:1	2 OF 4	D

THIS DRAWING IS UNPUBLISHED. RELEASED FOR PUBLICATION -,- .
© COPYRIGHT - By - ALL RIGHTS RESERVED.

REVISIONS

P	LTR	DESCRIPTION	DATE	DWN	APVD
	-	SEE SHEET 1	-	-	-

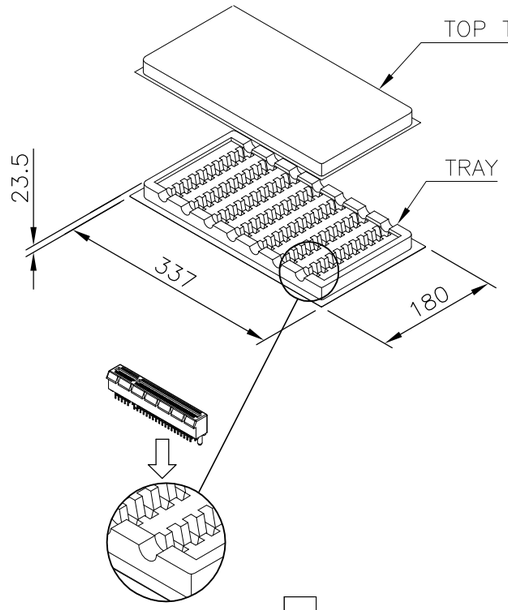

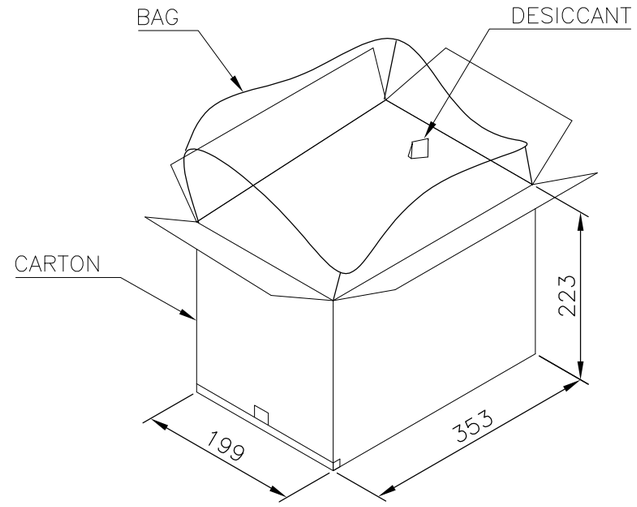

NOTES :
1. MATERIAL :
   TRAY : PVC, COLOR: TRANSPARENT.
   CARTON: CORRUGATED FIBER
   BOX: CORRUGATED FIBER
2. DIMENSION :
   TRAY: SEE DRAWING
   CARTON: SEE DRAWING
   BOX : SEE DRAWING
3. QUANTITY : SEE TABLE
4. WEIGHT : SEE TABLE

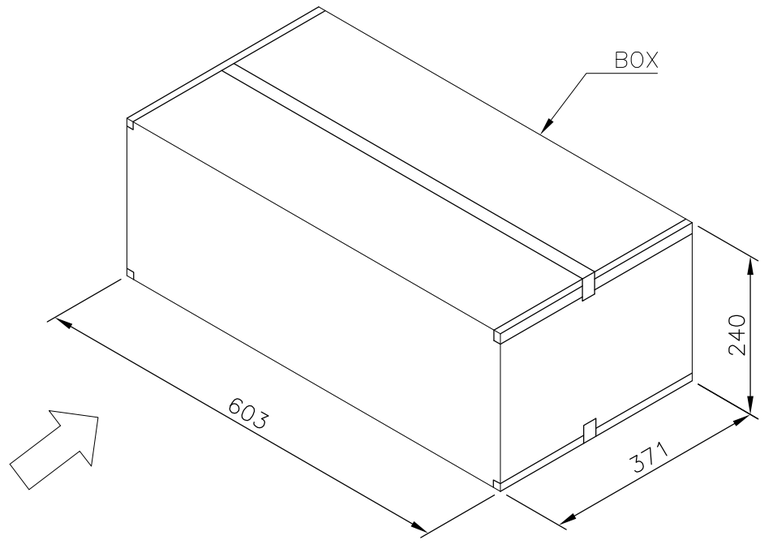

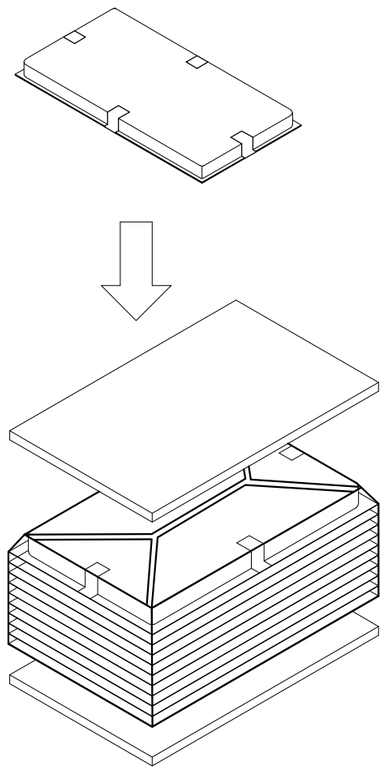

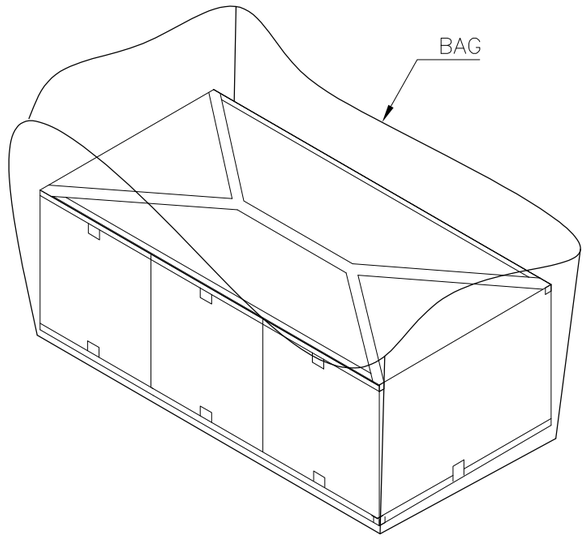

GROSS WEIGHT	NET WEIGHT	PCS/ TRAY	TRAY/ CARTON	CARTON/ BOX	PCS/ BOX	POS
9.6 KG	7.6 KG	30	10	3	900	164
8.5 KG	6.5 KG	40	10	3	1200	98
9.1 KG	7.1 KG	60	10	3	1800	64
7.7 KG	5.7 KG	70	10	3	2100	36

THIS DRAWING IS A CONTROLLED DOCUMENT.

DIMENSIONS: mm

TOLERANCES UNLESS OTHERWISE SPECIFIED:
0 PLC ± -
1 PLC ± -
2 PLC ± -
3 PLC ± -
4 PLC ± -
ANGLES ± -

MATERIAL -

FINISH -

DWN B. HSING 21MAY2009
CHK S. CHIEN 21MAY2009
APVD W. KODAMA 21MAY2009
PRODUCT SPEC -
APPLICATION SPEC -
WEIGHT 0

TE Connectivity

NAME
PCI EXPRESS CARD EDGE CONNECTOR
VERTICAL, DIP TYPE,(BOARD-LOCK FUNCTION)
-

SIZE	CAGE CODE	DRAWING NO	RESTRICTED TO
A3	00779	C-1775801	-

CUSTOMER DRAWING

SCALE 1:1 SHEET 3 OF 4 REV D

THIS DRAWING IS UNPUBLISHED. RELEASED FOR PUBLICATION –,– .
© COPYRIGHT – By – ALL RIGHTS RESERVED.

REVISIONS

P	LTR	DESCRIPTION	DATE	DWN	APVD
	–	SEE SHEET 1	–	–	–

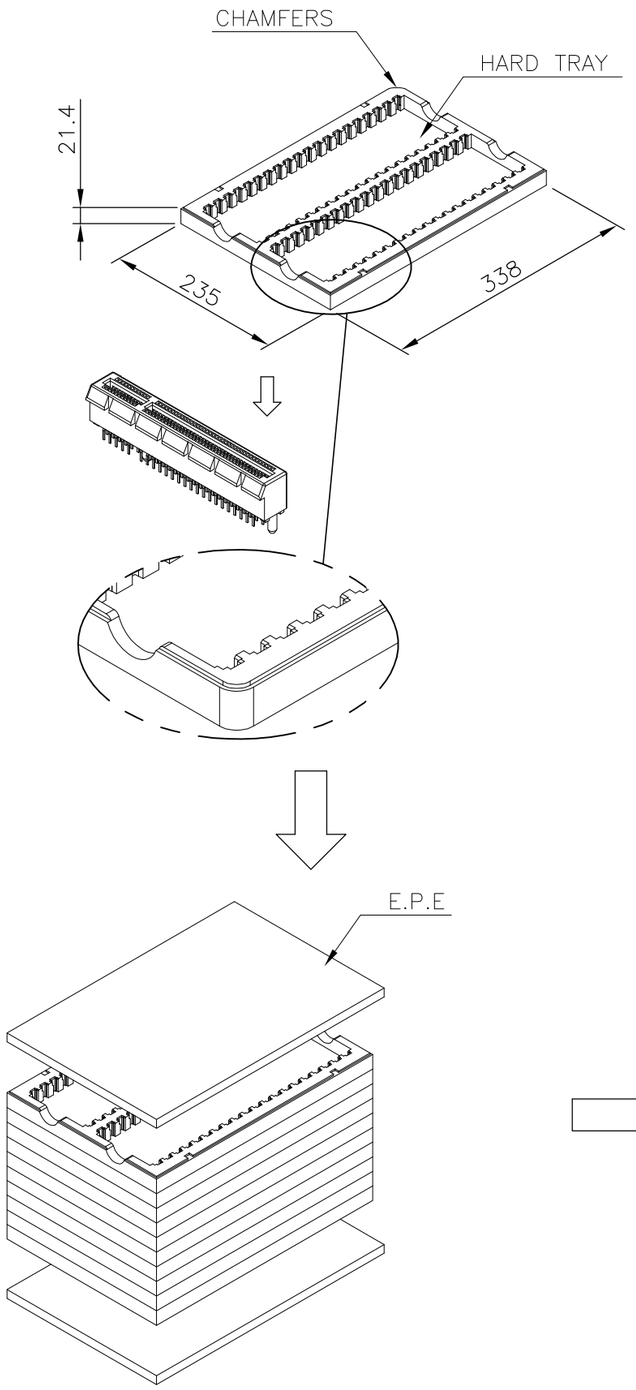

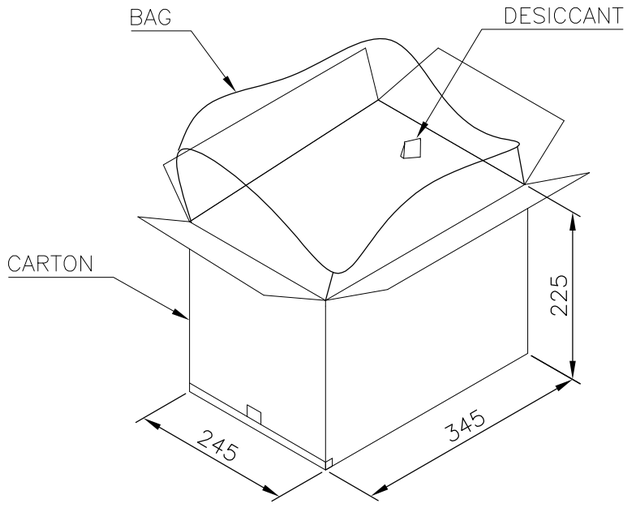

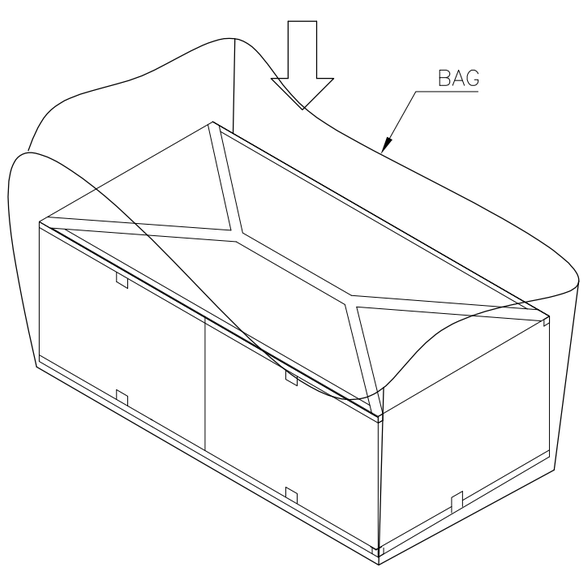

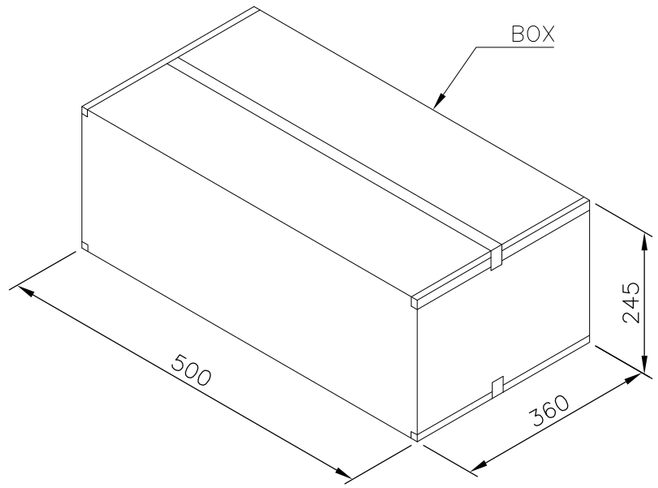

NOTES :
PACKING MATERIAL MET TE SPEC TEC–138–702.
* CADMIUM AND CADMIUM COMPOUNDS CONTENT:
5 PPM UNDER (PLASTIC, RUBBER, INK, PIGMENT, PAINT)
* LEAD, CADMIUM, CHROM VI AND MERCURY IN PACKAGING MATERIALS CONTENT: 100 PPM (COMBINED) UNDER.

1. MATERIAL :
TRAY: HIPS, COLOR: BLACK.
CARTON: CORRUGATED FIBER
BOX: CORRUGATED FIBER
TRANSPARENT BAG: PE, SIZE: 500mm*380mm*0.06mm
640mm*510mm*0.06mm
2. EACH BAG SHALL BE INCLUDED:
* DESICCANT

11.5 Kg	7.0 Kg	40	10	2	800	164
GROSS WEIGHT	NET WEIGHT	PCS/ TRAY	TRAY/ CARTON	CARTON/ BOX	PCS/ BOX	POS

THIS DRAWING IS A CONTROLLED DOCUMENT.

DIMENSIONS: mm

TOLERANCES UNLESS OTHERWISE SPECIFIED:
0 PLC ± –
1 PLC ± –
2 PLC ± –
3 PLC ± –
4 PLC ± –
ANGLES ± –

MATERIAL –
FINISH –

DWN B. HSING 21MAY2009
CHK S. CHIEN 21MAY2009
APVD W. KODAMA 21MAY2009
PRODUCT SPEC —
APPLICATION SPEC —
WEIGHT 0

TE Connectivity

NAME
PCI EXPRESS CARD EDGE CONNECTOR
VERTICAL, DIP TYPE,(BOARD–LOCK FUNCTION)
–

SIZE	CAGE CODE	DRAWING NO	RESTRICTED TO
A3	00779	C–1775801	—

CUSTOMER DRAWING | SCALE 1:1 | SHEET 4 OF 4 | REV D

1470–19 (1/15)

Общество с ограниченной ответственностью «МосЧип» ИНН 7719860671 / КПП 771901001
Адрес: 105318, г.Москва, ул.Щербаковская д.3, офис 1107

Данный компонент на территории Российской Федерации

Вы можете приобрести в компании MosChip.

Для оперативного оформления запроса Вам необходимо перейти по данной ссылке:

http://moschip.ru/get-element

Вы можете разместить у нас заказ для любого Вашего проекта, будь то серийное производство или разработка единичного прибора.

В нашем ассортименте представлены ведущие мировые производители активных и пассивных электронных компонентов.

Нашей специализацией является поставка электронной компонентной базы двойного назначения, продукции таких производителей как XILINX, Intel (ex.ALTERA), Vicor, Microchip, Texas Instruments, Analog Devices, Mini-Circuits, Amphenol, Glenair.

Сотрудничество с глобальными дистрибьюторами электронных компонентов, предоставляет возможность заказывать и получать с международных складов практически любой перечень компонентов в оптимальные для Вас сроки.

На всех этапах разработки и производства наши партнеры могут получить квалифицированную поддержку опытных инженеров.

Система менеджмента качества компании отвечает требованиям в соответствии с ГОСТ Р ИСО 9001, ГОСТ РВ 0015-002 и ЭС РД 009

Офис по работе с юридическими лицами:

105318, г.Москва, ул.Щербаковская д.3, офис 1107, 1118, ДЦ «Щербаковский»

Телефон: +7 495 668-12-70 (многоканальный)

Факс: +7 495 668-12-70 (доб.304)

E-mail: info@moschip.ru

Skype отдела продаж:
moschip.ru
moschip.ru_4
moschip.ru_6
moschip.ru_9