HCNW4502/3
HCPL-0452/0453/4502/4503
Single Channel, High Speed Optocouplers

Data Sheet

Lead (Pb) Free
RoHS 6 fully compliant

RoHS 6 fully compliant options available; -xxxE denotes a lead-free product

Description

These diode-transistor optocouplers use an insulating layer between a LED and an integrated photodetector to provide electrical insulation between input and output. Separate connections for the photodiode bias and output-transistor collector increase the speed up to a hundred times that of a conventional phototransistor coupler by reducing the base-collector capacitance.

These single channel optocouplers are available in 8-Pin DIP, SO-8 and Widebody package configurations.

The HCPL-4502/4503 and HCNW4502/4503 are designed for high speed TTL/TTL applications. A standard 16 mA TTL sink current through the input LED will provide enough output current for 1 TTL load and a 5.6 kΩ pull-up resistor. CTR for these devices is 19% minimum at $I_F = 16$ mA.

Functional Diagram

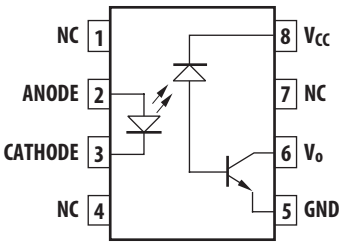

TRUTH TABLE (POSITIVE LOGIC)

LED	V_o
ON	LOW
OFF	HIGH

A 0.1 µF bypass capacitor must be connected between pins 5 and 8.

Features

- 15 kV/µs minimum common mode transient immunity at V_{CM} = 1500 V
- High speed: 1 Mb/s
- TTL compatible
- Available in 8-Pin DIP, SO-8, widebody packages
- Open collector output
- Guaranteed performance from temperature: 0°C to 70°C
- Safety approval
  UL Recognized – 3750 V_{rms} for 1 minute (5000 V_{rms} for 1 minute for HCNW and Option 020 devices) per UL1577
  CSA Approved
  IEC/EN/DIN EN 60747-5-5 Approved
  – V_{IORM} = 630 V peak for HCPL-4503#060
  – V_{IORM} = 1414 V peak for HCNW devices
- Dual channel version available (4534/0534)
- MIL-PRF-38534 hermetic version available (55XX/65XX/4N55)

Applications

- High voltage insulation
- Video signal isolation
- Power transistor isolation in motor drives
- Line receivers
- Feedback element in switched mode power supplies
- High speed logic ground isolation
  – TTL/TTL, TTL/CMOS, TTL/LSTTL
- Replaces pulse transformers
- Replaces slow phototransistor isolators
- Analog signal ground isolation

CAUTION: *It is advised that normal static precautions be taken in handling and assembly of this component to prevent damage and/or degradation which may be induced by ESD.*

The HCPL-4502, HCPL-0452, and HCNW4502 provide the electrical and switching performance of the 6N136, HCPL-0501, and HCNW136 with increased ESD protection.

The HCPL-4503, HCPL-0453, and HCNW4503 are similar to the HCPL-4502, HCPL-0452, and HCNW4502 optocouplers but have increased common mode transient immunity of 15 kV/µs minimum at V_{CM} = 1500 V guaranteed.

Schematic

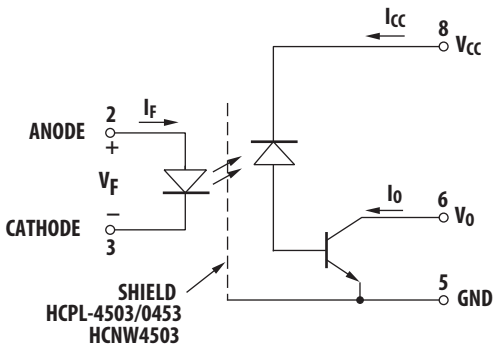

Selection Guide

Minimum CMR		8-Pin DIP (300 Mil)			Small-Outline SO-8		(400 Mil) Widebody Hermetic	
dV/dt (V/µs)	V_{CM} (V)	Current Transfer Ratio (%)	Single Channel Package	Dual Channel Package*	Single Channel Package	Dual Channel Package*	Single Channel Package	Single and Dual Channel Packages*
	10	19	HCPL-4502		HCPL-0452		HCNW4502	
15,000	1500	19	HCPL-4503	HCPL-4534	HCPL-0453	HCPL-0534	HCNW4503	
1,000	10	9						HCPL-55XX HCPL-65XX 4N55

*Technical data for these products are on separate Avago publications.

Ordering Information

HCPL-4502 and HCPL-4503, HCPL-0452, HCPL-0453 are UL Recognized with 3750 V_{rms} for 1 minute per UL1577.

HCNW4502 and HCNW4503 are UL Recognized with 5000 V_{rms} for 1 minute per UL1577. All devices isted above are approved under CSA Component Acceptance Notice #5, File CA 88324.

	Option								
Part number	**RoHS Compliant**	**Non RoHS Compliant**	**Package**	**Surface Mount**	**Gull Wing**	**Tape & Reel**	**UL 5000 V_{rms}/ 1 Minute rating**	**IEC/EN/DIN EN 60747-5-5**	**Quantity**
HCPL-4502 HCPL-4503	-000E	No option	300mil DIP-8						50 per tube
	-300E	#300		X	X				50 per tube
	-500E	#500		X	X	X			1000 per reel
	-020E	#020					X		50 per tube
	-320E	#320		X	X		X		50 per tube
	-520E	#520		X	X	X	X		1000 per reel
	-060E	#060						X	50 per tube
	-360E	#360		X	X			X	50 per tube
	-560E	#560		X	X	X		X	1000 per reel
HCPL-0452 HCPL-0453	-000E	No option	SO-8						100 per tube
	-500E	#500		X	X	X			1500 per reel
	-060E	#060						X	100 per tube
	-560E	#560		X	X	X		X	1500 per reel
HCNW4502 HCNW4503	-000E	No option	400mil Widebody DIP-8				X	X	42 per tube
	-300E	#300		X	X		X	X	42 per tube
	-500E	#500		X	X	X	X	X	750 per reel

To order, choose a part number from the part number column and combine with the desired option from the option column to form an order entry.

Example 1:

HCPL-4502-560E to order product of 300mil DIP Gull Wing Surface Mount package in Tape and Reel packaging with IEC/EN/DIN EN 60747-5-5 Safety Approval in RoHS compliant.

Example 2:

HCPL-4502 to order product of 300mil DIP package in tube packaging and non RoHS compliant.

Option datasheets are available. Contact your Avago sales representative or authorized distributor for information.

Remarks: The notation '#XXX' is used for existing products, while (new) products launched since 15th July 2001 and RoHS compliant option will use '-XXXE'.

Package Outline Drawings

8-Pin DIP Package (HCPL-4502/3)

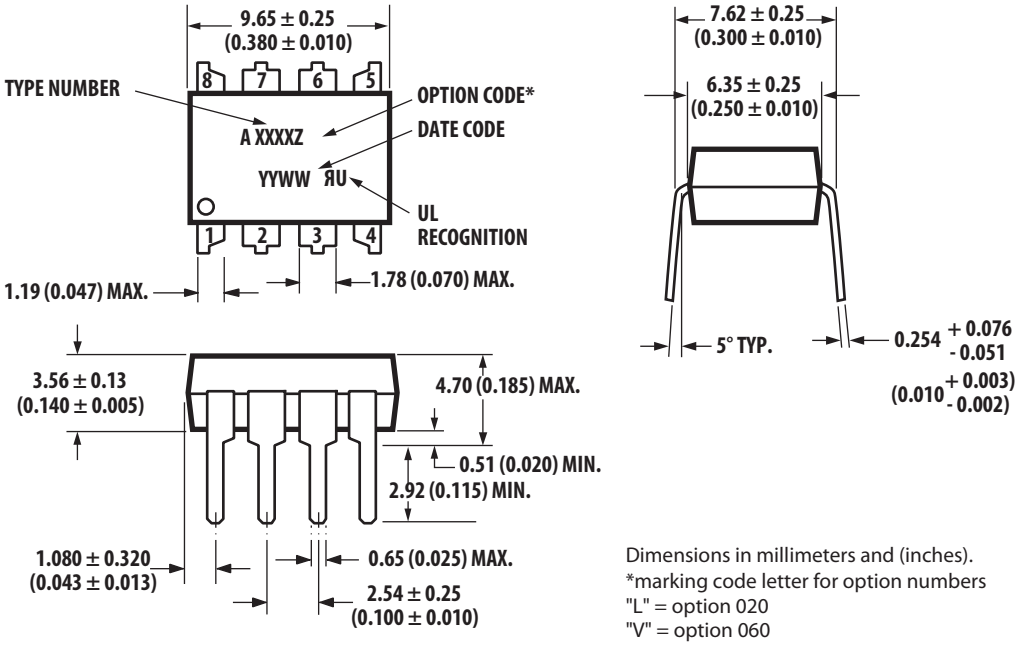

Dimensions in millimeters and (inches).
*marking code letter for option numbers
"L" = option 020
"V" = option 060
Option numbers 300 and 500 not marked.

Note: Floating lead protrusion is 0.25 mm (10 mils) max.

8-Pin DIP Package with Gull Wing Surface Mount Option 300 (HCPL-4502/3)

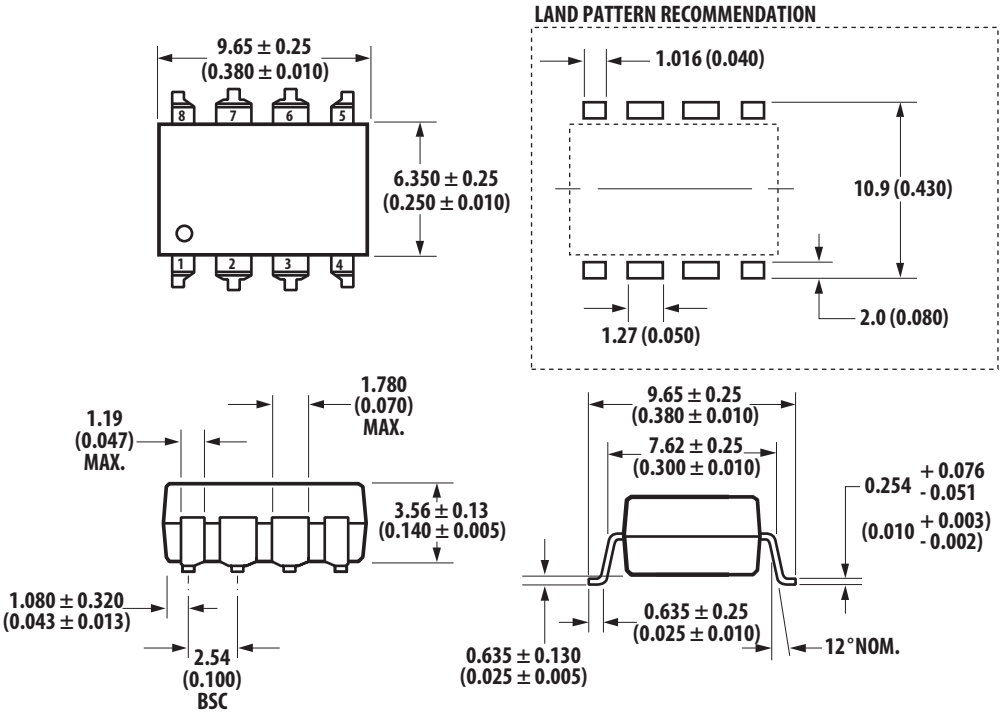

Dimensions in millimeters (inches).
Lead coplanarity = 0.10 mm (0.004 inches).

Note: Floating lead protrusion is 0.25 mm (10 mils) max.

Small Outline SO-8 Package (HCPL-0452/3)

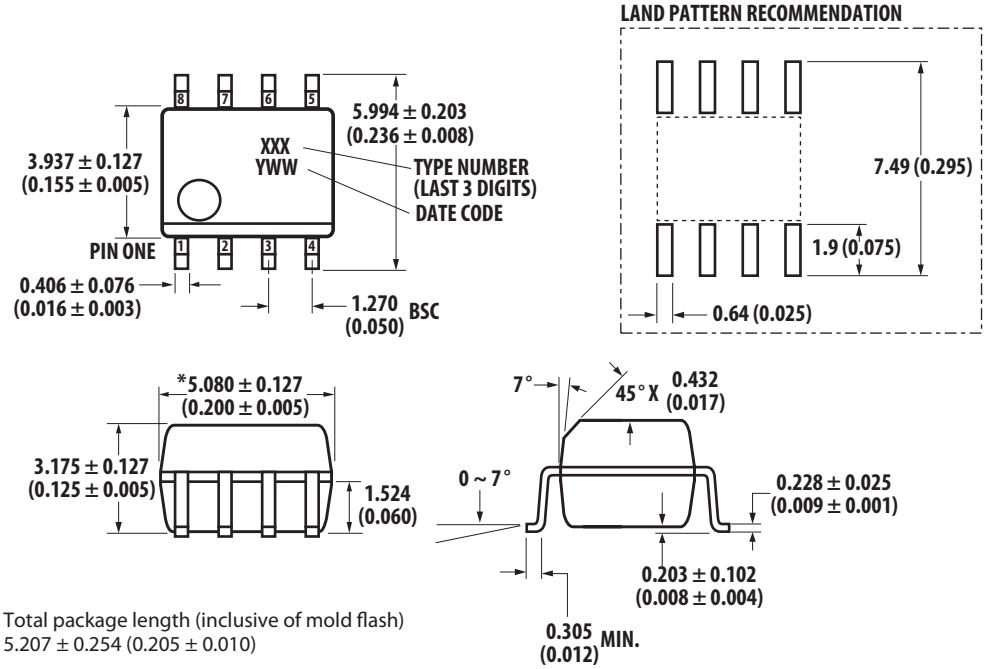

∗ Total package length (inclusive of mold flash)
5.207 ± 0.254 (0.205 ± 0.010)

Dimensions in millimeters (inches).
Lead coplanarity = 0.10 mm (0.004 inches) max.

8-Pin Widebody DIP Package (HCNW4502/3)

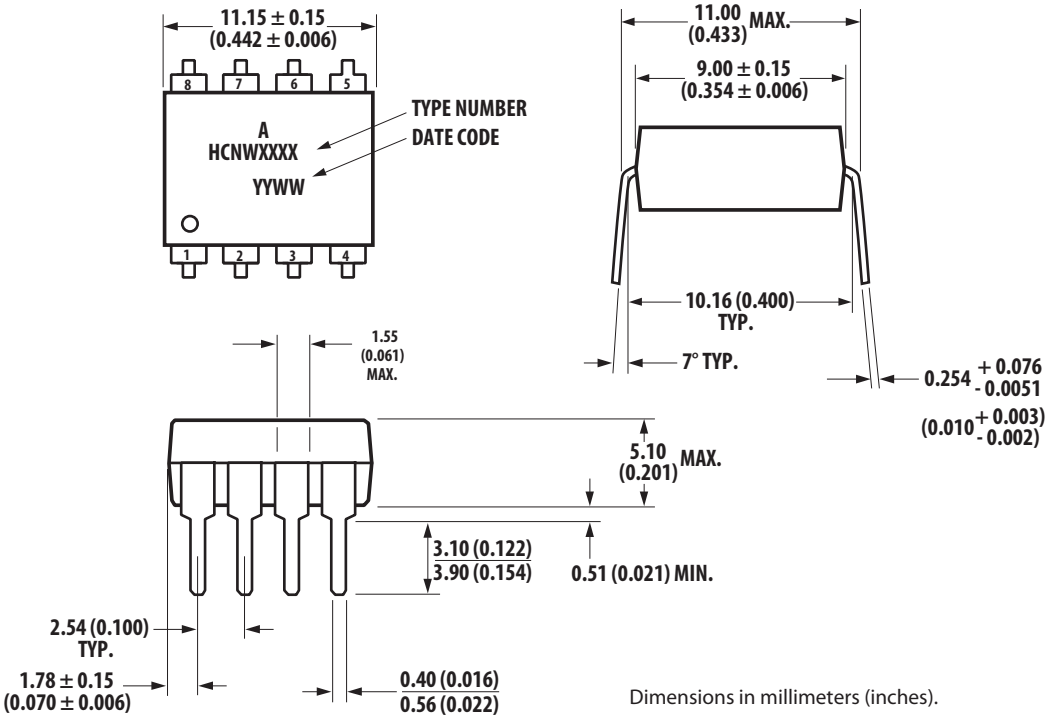

Dimensions in millimeters (inches).

Note: Floating lead protrusion is 0.25 mm (10 mils) max.

8-Pin Widebody DIP Package with Gull Wing Surface Mount Option 300 (HCNW4502/3)

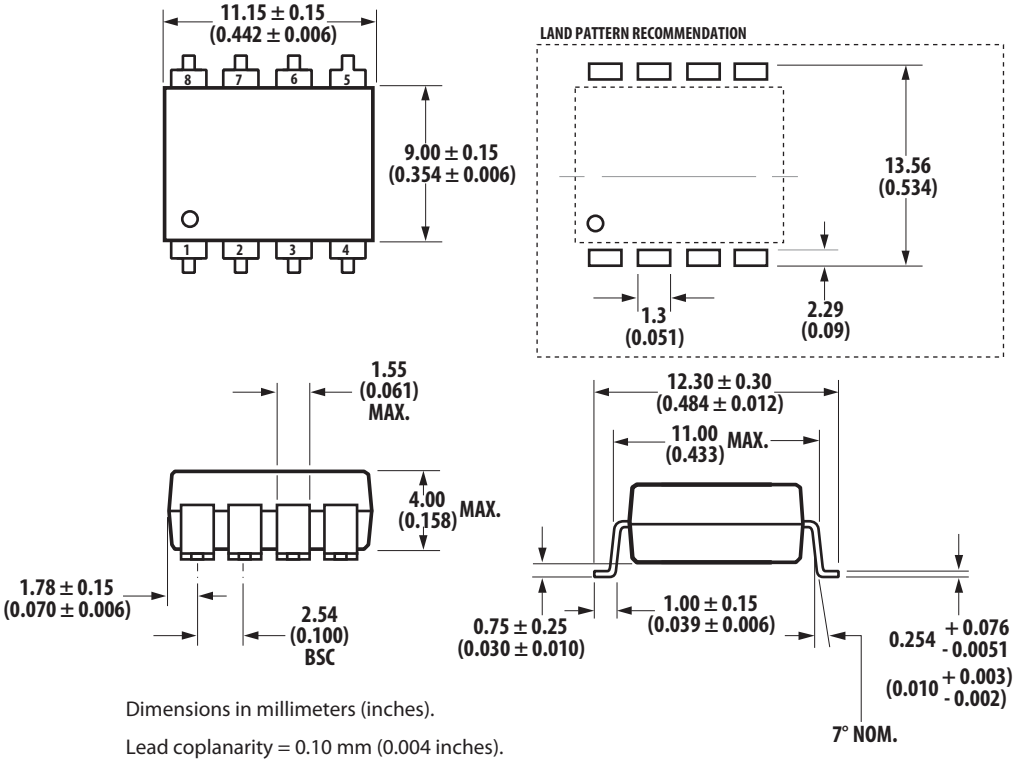

Dimensions in millimeters (inches).

Lead coplanarity = 0.10 mm (0.004 inches).

Note: Floating lead protrusion is 0.25 mm (10 mils) max.

Solder Reflow Temperature Profile

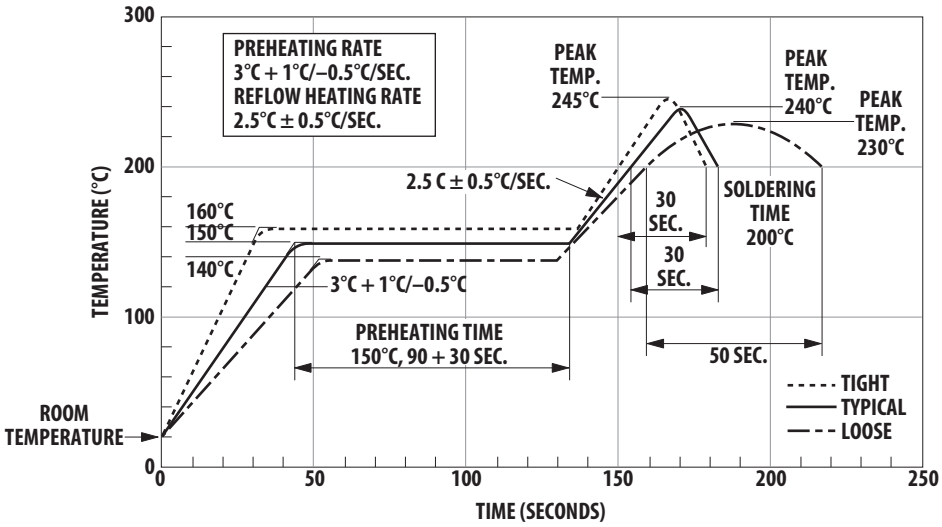

Note: Non-halide flux should be used.

Recommended Pb-Free IR Profile

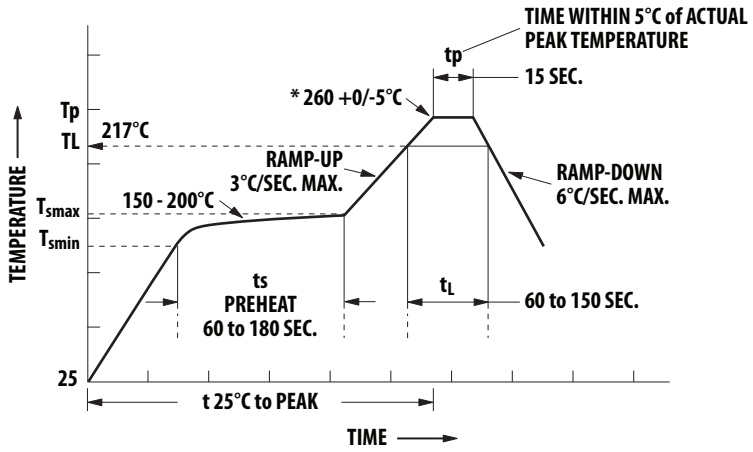

Notes:
The time from 25°C to peak Temperature = 8 minutes max.
T_{smax} = 200°C, t_{smin} = 150°C

Non-halide flux should be used.

* Recommended peak temperature for Widebody 400mils package is 245°C

Regulatory Information

The devices contained in this data sheet have been approved by the following organizations:

UL

Recognized under UL 1577, Component Recognition Program, File E55361.

CSA

Approved under CSA Component Acceptance Notice #5, File CA 88324.

IEC/EN/DIN EN 60747-5-5 (HCNW and option 060 only)

Approved with Maximum Working Insulation Voltage
V_{iorm}=560V_{peak} for HCPL-0452/0453,
V_{iorm}=630 V_{peak} for HCPL-4502/4503, and
V_{iorm}=1414 V_{peak} for HCNW4502/4503.

Insulation and Safety Related Specifications

Parameter	Symbol	8-Pin DIP (300 Mil) Value	SO-8 Value	Widebody (400 Mil) Value	Unit	Conditions
Minimum External Air Gap (External Clearance)	L(101)	7.1	4.9	9.6	mm	Measured from input terminals to output terminals, shortest distance through air.
Minimum External Tracking (External Creepage)	L(102)	7.4	4.8	10.0	mm	Measured from input terminals to output terminals, shortest distance path along body.
Minimum Internal Plastic Gap (Internal Clearance)		0.08	0.08	1.0	mm	Through insulation distance, conductor to conductor, usually the direct distance between the photoemitter and photodetector inside the optocoupler cavity.
Minimum Internal Tracking (Internal Creepage)		NA	NA	4.0	mm	Measured from input terminals to output terminals, along internal cavity.
Tracking Resistance (Comparative Tracking Index)	CTI	> 175	> 175	> 175	V	DIN IEC 112/VDE 0303 Part 1
Isolation Group		IIIa	IIIa	IIIa		Material Group (DIN VDE 0110, 1/89, Table 1)

Option 300 - surface mount classification is Class A in accordance with CECC 00802.

IEC/EN/DIN EN 60747-5-5 Insulation Related Characteristics (OPTION 060 ONLY)

Description	Symbol	Characteristic HCPL-4502/4503	Characteristic HCPL-0452/0453	Units
Installation classification per DIN VDE 0110/39, Table 1				
for rated mains voltage ≤ 300 V_{rms}		I-IV	I-IV	
for rated mains voltage ≤ 600 V_{rms}		I-IV	I-I I I	
Climatic Classification		55/100/21	55/100/21	
Pollution Degree (DIN VDE 0110/39)		2	2	
Maximum Working Insulation Voltage	V_{IORM}	630	560	V_{peak}
Input to Output Test Voltage, Method b* V_{IORM} x 1.875 = V_{PR}, 100% Production Test with t_m = 1 sec, Partial Discharge < 5 pC	V_{PR}	1181	1050	V_{peak}
Input to Output Test Voltage, Method a* V_{IORM} x 1.6 = V_{PR}, Type and sample test, t_m = 10 sec, Partial Discharge < 5 pC	V_{PR}	1008	896	V_{peak}
Highest Allowable Overvoltage* (Transient Overvoltage, t_{ini} = 60 sec)	V_{IOTM}	8000	6000	V_{peak}
Safety Limiting Values (Maximum values allowed in the event of a failure, also see Figure 9, Thermal Derating curve.)				
Case Temperature	T_S	175	175	°C
Input Current	$I_{S,INPUT}$	230	150	mA
Output Power	$P_{S,OUTPUT}$	600	600	mW
Insulation Resistance at T_S, V_{IO} = 500 V	R_S	$\geq 10^9$	$\geq 10^9$	Ω

IEC/EN/DIN EN 60747-5-5 Insulation Related Characteristics (HCNW4502/3 ONLY)

Description	Symbol	Characteristic	Units
Installation classification per DIN VDE 0110/39, Table 1			
for rated mains voltage ≤600 V rms		I-IV	
for rated mains voltage ≤1000 V rms		I-III	
Climatic Classification		55/85/21	
Pollution Degree (DIN VDE 0110/39)		2	
Maximum Working Insulation Voltage	V_{IORM}	1414	V_{peak}
Input to Output Test Voltage, Method b* V_{IORM} x 1.875 = V_{PR}, 100% Production Test with t_m = 1 sec, Partial Discharge < 5 pC	V_{PR}	2652	V_{peak}
Input to Output Test Voltage, Method a* V_{IORM} x 1.6 = V_{PR}, Type and sample test, t_m = 10 sec, Partial Discharge < 5 pC	V_{PR}	2262	V_{peak}
Highest Allowable Overvoltage* (Transient Overvoltage, t_{ini} = 60 sec)	V_{IOTM}	8000	V_{peak}
Safety Limiting Values (Maximum values allowed in the event of a failure, also see Figure 9, Thermal Derating curve.)			
Case Temperature	T_S	150	°C
Input Current	$I_{S,INPUT}$	400	mA
Output Power	$P_{S,OUTPUT}$	700	mW
Insulation Resistance at T_S, V_{IO} = 500 V	R_S	$\geq 10^9$	Ω

*Refer to the front of the optocoupler section of the current catalog, under Product Safety Regulations section IEC/EN/DIN EN 60747-5-5, for a detailed description.
Note: Isolation characteristics are guaranteed only within the safety maximum ratings which must be ensured by protective circuits in application.

Absolute Maximum Ratings

Parameter	Symbol	Device	Min.	Max.	Units	Note
Storage Temperature	T_S		-55	125	°C	
Operating Temperature	T_A	8-Pin DIP SO-8	-55	100	°C	
		Widebody	-55	85		
Average Forward Input Current	$I_{F(AVG)}$			25	mA	1
Peak Forward Input Current (50% duty cycle, 1 ms pulse width)	$I_{F(PEAK)}$	8-Pin DIP SO-8		50	mA	2
(50% duty cycle, 1 ms pulse width)		Widebody		40		
Peak Transient Input Current (≤1 µs pulse width, 300 pps)	$I_{F(TRANS)}$	8-Pin DIP SO-8		1	A	
		Widebody		0.1		
Reverse LED Input Voltage (Pin 3-2)	V_R	8-Pin DIP SO-8		5	V	
		Widebody		3		
Input Power Dissipation	P_{IN}	8-Pin DIP SO-8		45	mW	3
		Widebody		40		
Average Output Current (Pin 6)	$I_{O(AVG)}$			8	mA	
Peak Output Current	$I_{O(PEAK)}$			16	mA	
Emitter-Base Reverse Voltage (Pin 5-7, except 4502/3, 0452/3)	V_{EBR}			5	V	
Supply Voltage (Pin 8-5)	V_{CC}		-0.5	30	V	
Output Voltage (Pin 6-5)	V_O		-0.5	20	V	
Base Current (Pin 7, except 4502/3, 0452/3)	I_B			5	mA	
Output Power Dissipation	P_O			100	mW	4
Lead Solder Temperature (Through-Hole Parts Only)						
1.6 mm below seating plane, 10 seconds up to seating plane, 10 seconds	T_{LS}	8-Pin DIP Widebody		260 260	°C °C	
Reflow Temperature Profile	T_{RP}	SO-8 and Option 300	See **Package Outline Drawings** section			

Electrical Specifications (DC)

Over recommended temperature (T_A = 0°C to 70°C) unless otherwise specified. See note 13.

Parameter	Symbol	Device	Min.	Typ.*	Max.	Units	Test Conditions			Fig.	Note
Current Transfer Ratio	CTR	HCPL-4502/3	19	24	50		T_A = 25°C	V_O = 0.4 V	I_F = 16 mA, V_{CC} = 4.5 V	1, 2, 4	5
		HCPL-0452/3 HCNW4502/3	15	24				V_O = 0.5 V			
Logic Low Output Voltage	V_{OL}	HCPL-4502/3		0.1	0.4		T_A = 25°C	I_O = 3.0 mA	I_F = 16 mA, V_{CC} = 4.5 V		
		HCPL-0452/3 HCNW4502/3		0.1	0.5			I_O = 2.4 mA			
Logic High Output Current	I_{OH}			0.003	0.5	µA	T_A = 25°C	$V_O = V_{CC}$ = 5.5 V	I_F = 0 mA	7	
				0.01	1		T_A = 25°C	$V_O = V_{CC}$ = 15 V			
					50			$V_O = V_{CC}$ = 15 V			
Logic Low Supply Current	I_{CCL}			50	200	µA	I_F = 16 mA, V_O = Open, V_{CC} = 15 V				10
Logic High Supply Current	I_{CCH}			0.02	1	µA	T_A = 25°C	I_F = 16 mA, V_O = Open,			10
					2			V_{CC} = 15 V			
Input Forward Voltage	V_F	8-Pin DIP SO-8		1.5	1.7	V	T_A = 25°C	I_F = 16 mA		3	
					1.8						
		Widebody	1.45	1.68	1.85		T_A = 25°C	I_F = 16 mA			
			1.35		1.95						
Input Reverse Breakdown Voltage	BV_R	8-Pin DIP SO-8	5			V	I_R = 10 µA				
		Widebody	3				I_R = 100 µA				
Temperature Coefficient of Forward Voltage	$\Delta V_F/\Delta T_A$	8-Pin DIP SO-8		-1.6		mV/°C	I_F = 16 mA				
		Widebody		-1.9							
Input Capacitance	C_{IN}	8-Pin DIP SO-8		60		pF	f = 1 MHz, V_F = 0 V				
		Widebody		90							
Transistor DC Current Gain	h_{FE}	8-Pin DIP SO-8		150			V_O = 5 V, I_O = 3 mA				
				130			V_O = 0.4 V, I_B = 20 µA				
		Widebody		180			V_O = 0.4 V, I_B = 20 µA				
				160			V_O = 5 V, I_O = 3 mA				

*All typicals at T_A = 25°C.

Switching Specifications (AC)

Over recommended temperature (T_A = 0°C to 70°C), V_{CC} = 5 V, I_F = 16 mA unless otherwise specified.

Parameter	Sym.	Device	Min.	Typ.*	Max.	Units	Test Conditions		Fig.	Note
Propagation Delay Time to Logic Low at Output	t_{PHL}	HCPL-4502/3 HCPL-0452/3 HCNW4502/3		0.2	0.8 1.0		T_A = 25°C	R_L = 1.9 kΩ	5, 6, 10	8
Propagation Delay Time to Logic High at Output	t_{PLH}	HCPL-4502/3 HCPL-0452/3 HCNW4502/3		0.6	0.8 1.0		T_A = 25°C	R_L = 1.9 kΩ	5, 6, 10	8
Common Mode Transient Immunity at Logic High Level Output	$\|CM_H\|$	HCPL-4502 HCPL-0452 HCNW4502		1		kV/µs	R_L = 1.9 kΩ	I_F = 0 mA, T_A = 25°C, V_{CM} = 10 V_{p-p} C_L = 15 pF	11	7, 8
		HCPL-4503 HCPL-0453 HCNW4503	15	30			R_L = 1.9 kΩ	I_F = 0 mA, T_A = 25°C, V_{CM} = 1500 V_{p-p}, C_L = 15 pF		
Common Mode Transient Immunity at Logic Low Level Output	$\|CM_L\|$	HCPL-4502 HCPL-0452 HCNW4502		1		kV/µs	R_L = 1.9 kΩ	I_F = 16 mA, T_A = 25°C, V_{CM} = 10 V_{p-p} C_L = 15 pF	11	7, 8
		HCPL-4503 HCPL-0453 HCNW4503	15	30			R_L = 1.9 kΩ	I_F = 16 mA, T_A = 25°C, V_{CM} = 1500 V_{p-p}, C_L = 15 pF		

*All typicals at T_A = 25°C.

Package Characteristics

Over recommended temperature (T_A = 0°C to 70°C) unless otherwise specified.

Parameter	Sym.	Device	Min.	Typ.*	Max.	Units	Test Conditions	Fig.	Note
Input-Output Momentary Withstand Voltage**	V_{ISO}	8-Pin DIP SO-8	3750			V rms	RH < 50%, t = 1 min., T_A = 25°C		6, 11
		Widebody	5000						6, 12
		8-Pin DIP (Option 020)	5000						6, 9, 12
	I_{I-O}	8-Pin DIP			1	µA	45% RH, t = 5 s, V_{I-O} = 3 kVdc, T_A = 25°C		6, 13
Input-Output Resistance	R_{I-O}	8-Pin DIP SO-8		10^{12}		Ω	V_{I-O} = 500 Vdc		6
		Widebody	10^{12}	10^{13}			T_A = 25°C		
			10^{11}				T_A = 100°C		
Input-Output Capacitance	C_{I-O}	8-Pin DIP SO-8		0.6		pF	f = 1 MHz		6
		Widebody		0.5	0.6				

*All typicals at T_A = 25°C.

**The Input-Output Momentary Withstand Voltage is a dielectric voltage rating that should not be interpreted as an input-output continuous voltage rating. For the continuous voltage rating refer to the IEC/EN/DIN EN 60747-5-5 Insulation Related Characteristics Table (if applicable), your equipment level safety specification or Avago Application Note 1074 entitled "Optocoupler Input-Output Endurance Voltage," publication number 5963-2203E.

Notes:

1. Derate linearly above 70°C free-air temperature at a rate of 0.8 mA/°C (8-Pin DIP).
   Derate linearly above 85°C free-air temperature at a rate of 0.5 mA/°C (SO-8).
2. Derate linearly above 70°C free-air temperature at a rate of 1.6 mA/°C (8-Pin DIP).
   Derate linearly above 85°C free-air temperature at a rate of 1.0 mA/°C (SO-8).
3. Derate linearly above 70°C free-air temperature at a rate of 0.9 mW/°C (8-Pin DIP).
   Derate linearly above 85°C free-air temperature at a rate of 1.1 mW/°C (SO-8).
4. Derate linearly above 70°C free-air temperature at a rate of 2.0 mW/°C (8-Pin DIP).
   Derate linearly above 85°C free-air temperature at a rate of 2.3 mW/°C (SO-8).
5. CURRENT TRANSFER RATIO in percent is defined as the ratio of output collector current, I_O, to the forward LED input current, I_F, times 100.
6. Device considered a two-terminal device: Pins 1, 2, 3, and 4 shorted together and Pins 5, 6, 7, and 8 shorted together.
7. Common mode transient immunity in a Logic High level is the maximum tolerable (positive) dV_{CM}/dt on the leading edge of the common mode pulse signal, V_{CM}, to assure that the output will remain in a Logic High state (i.e., V_O > 2.0 V). Common mode transient immunity in a Logic Low level is the maximum tolerable (negative) dV_{CM}/dt on the trailing edge of the common mode pulse signal, V_{CM}, to assure that the output will remain in a Logic Low state (i.e., V_O < 0.8 V).
8. The 1.9 kΩ load represents 1 TTL unit load of 1.6 mA and the 5.6 kΩ pull-up resistor.
9. See Option 020 data sheet for more information.
10. Use of a 0.1 µf bypass capacitor connected between pins 5 and 8 is recommended.
11. In accordance with UL 1577, each optocoupler is proof tested by applying an insulation test voltage ≥ 4500 V rms for 1 second (leakage detection current limit, I_{I-O} ≤ 5 µA). This test is performed before the 100% Production test shown in the IEC/EN/DIN EN 60747-5-5 Insulation Related Characteristics Table if applicable.
12. In accordance with UL 1577, each optocoupler is proof tested by applying an insulation test voltage ≥ 6000 V rms for 1 second (leakage detection current limit, I_{I-O} ≤ 5 µA). This test is performed before the 100% Production test shown in the IEC/EN/DIN EN 60747-5-5 Insulation Related Characteristics Table if applicable.
13. This rating is equally validated by an equivalent ac proof test.

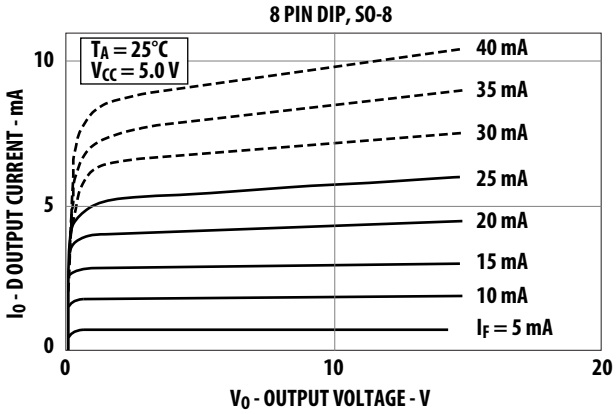

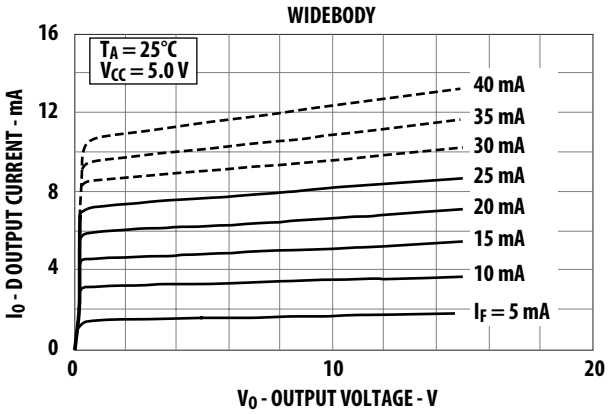

Figure 1. DC and pulsed transfer characteristics.

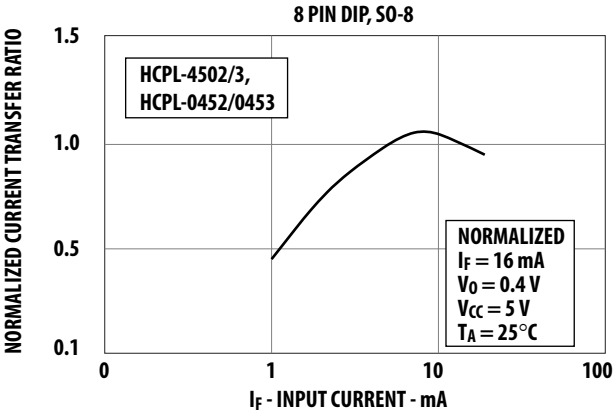

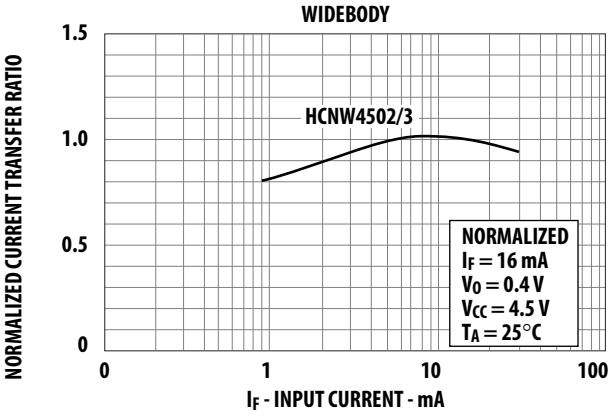

Figure 2. Current transfer ratio vs. input current.

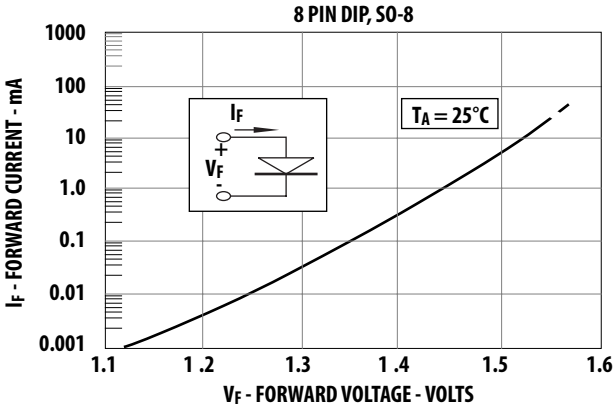

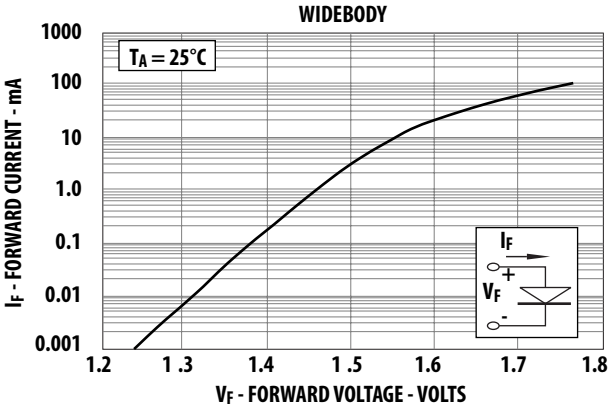

Figure 3. Input current vs. forward voltage.

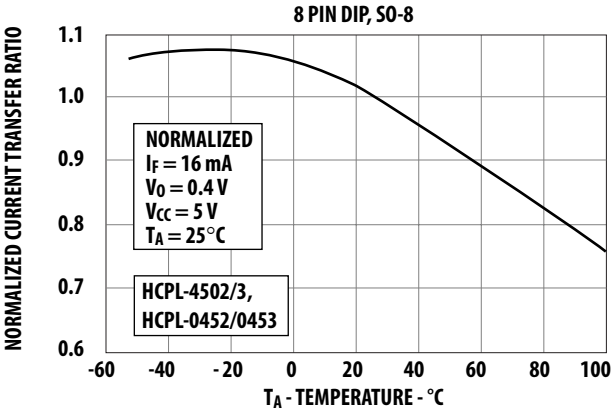

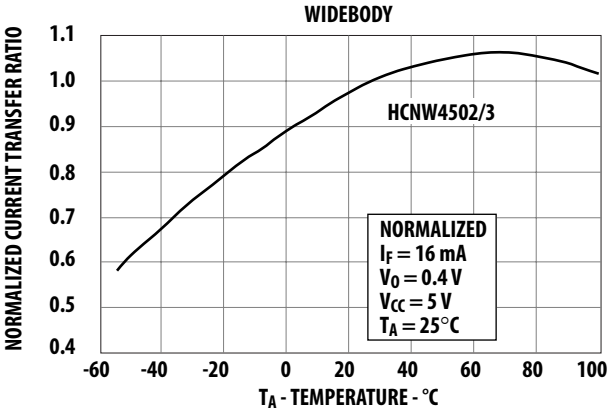

Figure 4. Current transfer ratio vs. temperature.

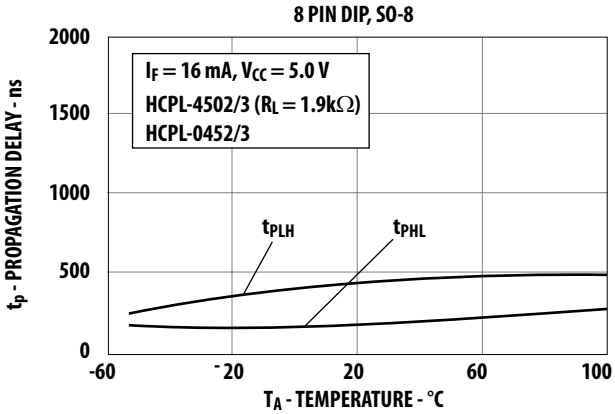

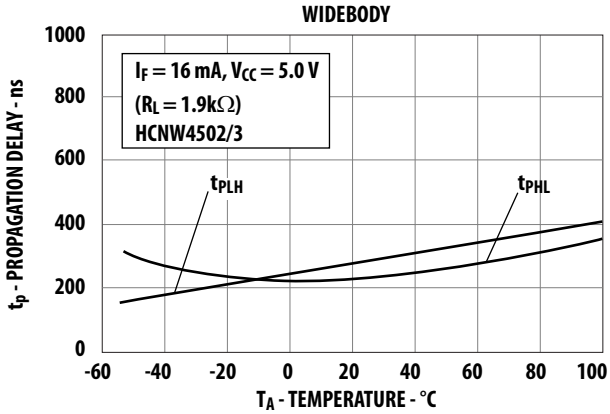

Figure 5. Propagation delay vs. temperature.

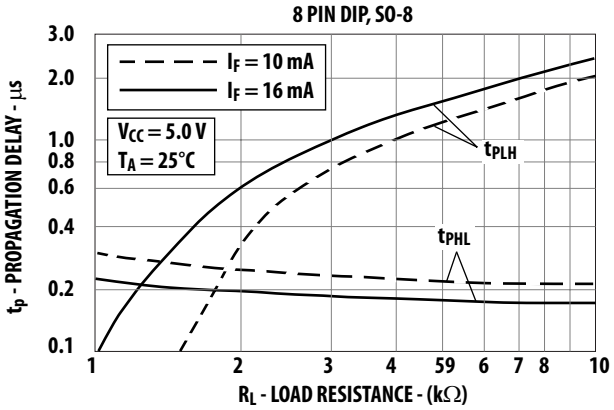

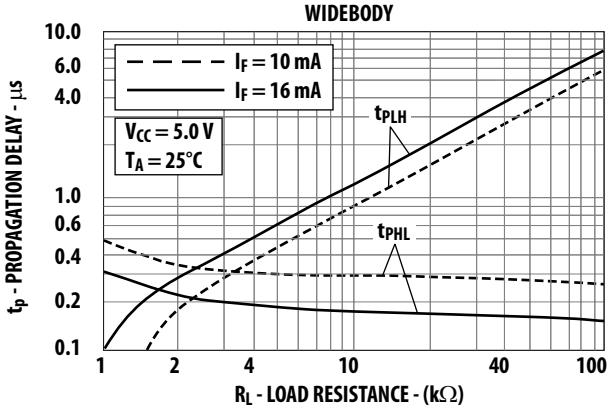

Figure 6. Propagation delay time vs. load resistance.

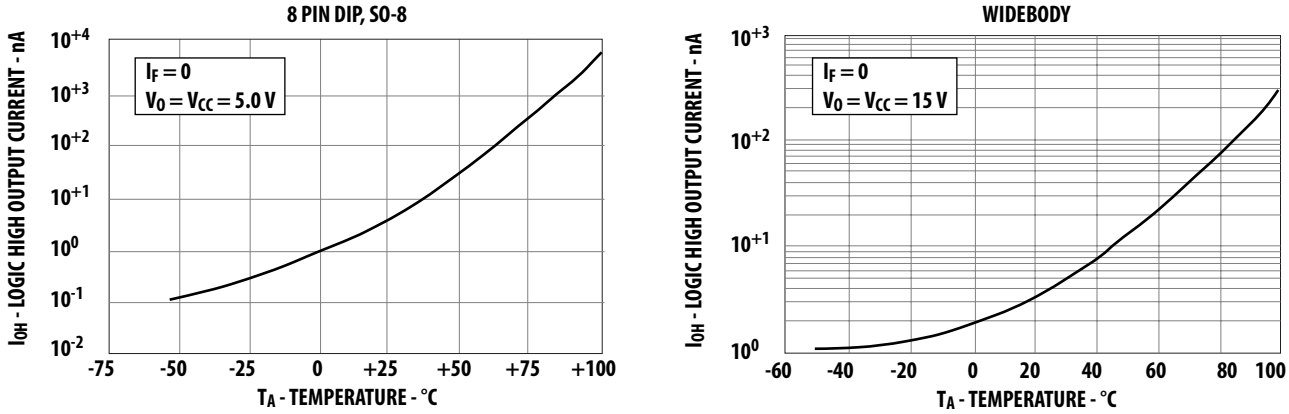

Figure 7. Logic high output current vs. temperature.

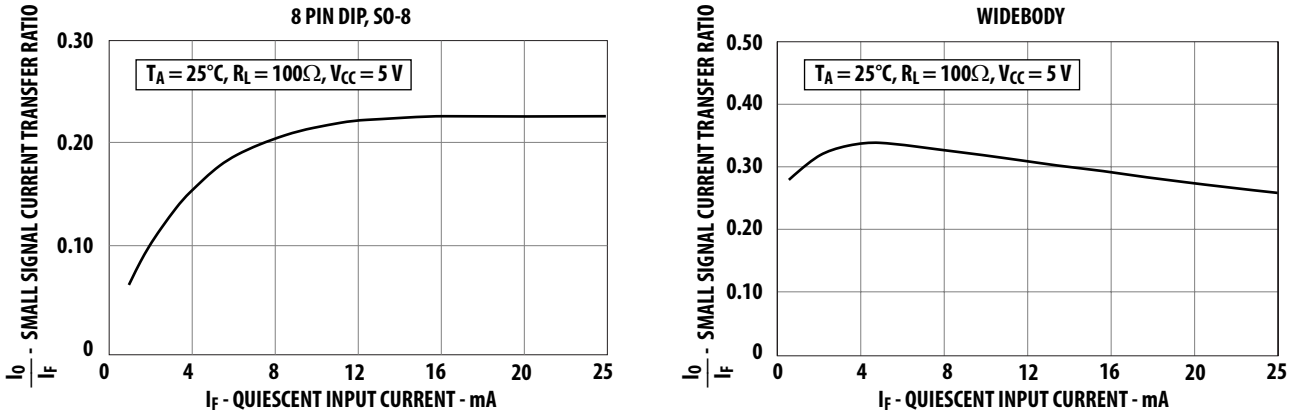

Figure 8. Small-signal current transfer ratio vs. quiescent input current.

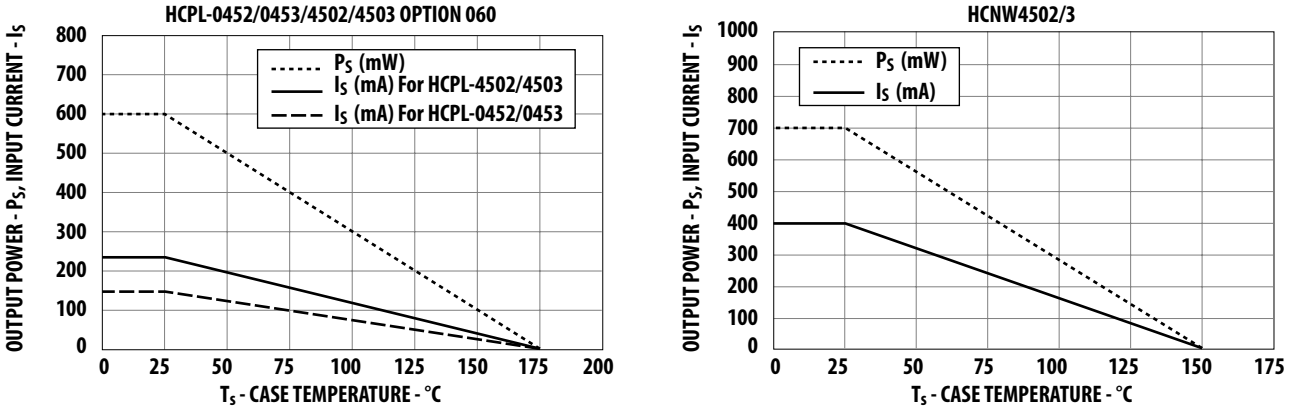

Figure 9. Thermal derating curve, dependence of safety limiting value with case temperature per IEC/EN/DIN EN 60747-5-5.

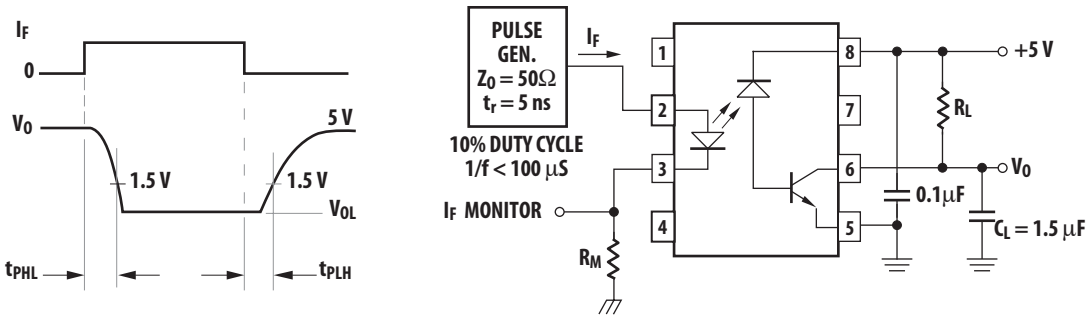

Figure 10. Switching test circuit.

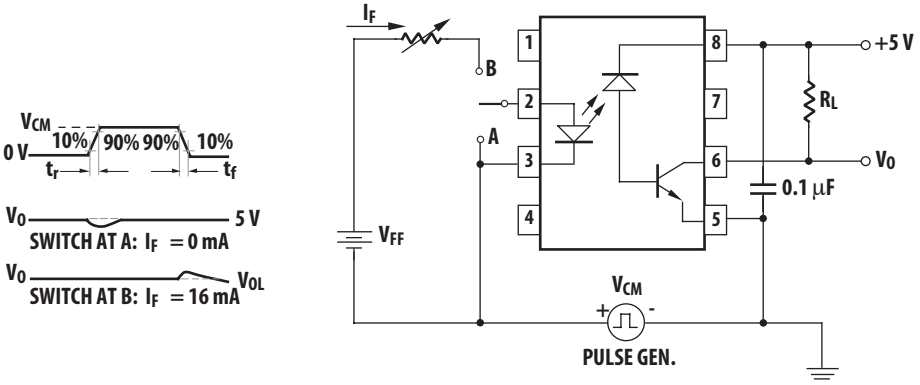

Figure 11. Test circuit for transient immunity and typical waveforms.

For product information and a complete list of distributors, please go to our web site: **www.avagotech.com**

Avago, Avago Technologies, and the A logo are trademarks of Avago Technologies in the United States and other countries.
Data subject to change. Copyright © 2005-2013 Avago Technologies. All rights reserved.
AV02-1392EN - January 31, 2013

Общество с ограниченной ответственностью «МосЧип» ИНН 7719860671 / КПП 771901001
Адрес: 105318, г.Москва, ул.Щербаковская д.3, офис 1107

Данный компонент на территории Российской Федерации

Вы можете приобрести в компании MosChip.

Для оперативного оформления запроса Вам необходимо перейти по данной ссылке:

http://moschip.ru/get-element

Вы можете разместить у нас заказ для любого Вашего проекта, будь то серийное производство или разработка единичного прибора.

В нашем ассортименте представлены ведущие мировые производители активных и пассивных электронных компонентов.

Нашей специализацией является поставка электронной компонентной базы двойного назначения, продукции таких производителей как XILINX, Intel (ex.ALTERA), Vicor, Microchip, Texas Instruments, Analog Devices, Mini-Circuits, Amphenol, Glenair.

Сотрудничество с глобальными дистрибьюторами электронных компонентов, предоставляет возможность заказывать и получать с международных складов практически любой перечень компонентов в оптимальные для Вас сроки.

На всех этапах разработки и производства наши партнеры могут получить квалифицированную поддержку опытных инженеров.

Система менеджмента качества компании отвечает требованиям в соответствии с ГОСТ Р ИСО 9001, ГОСТ РВ 0015-002 и ЭС РД 009

Офис по работе с юридическими лицами:

105318, г.Москва, ул.Щербаковская д.3, офис 1107, 1118, ДЦ «Щербаковский»

Телефон: +7 495 668-12-70 (многоканальный)

Факс: +7 495 668-12-70 (доб.304)

E-mail: info@moschip.ru

Skype отдела продаж:
moschip.ru
moschip.ru_4
moschip.ru_6
moschip.ru_9