RFFM6909

925MHz Transmit/Receive Module

This module is intended for 868MHz and 915MHz AMR solutions. The FEM provides separate ports for Rx/Tx paths, single-ended Tx and single-ended Rx or Rx differential port, 14dB gain single stage LNA, and single port antenna connection. The PA switch provides a nominal insertion loss of 0.8dB. The device is provided in a 4.0mm x 3.0mm, 18-pin package.

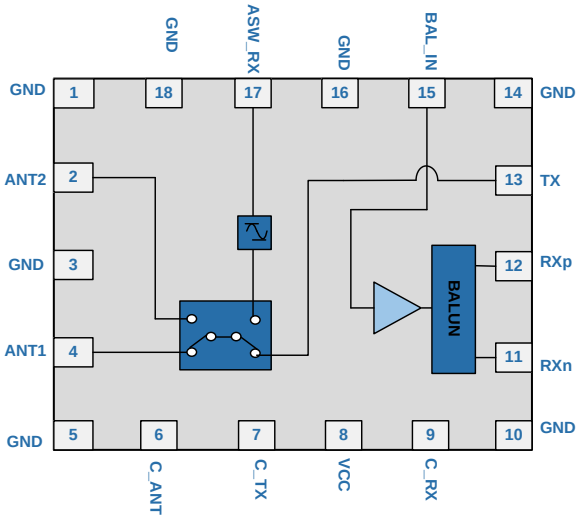

Functional Block Diagram

Package: LGA, 18-pin, 4.0mm x 3.0mm

Features

- Tx Insertion Loss: 0.7dB
- 50Ω Tx Transceiver Interface
- 75Ω Rx Differential Transceiver Interface
- Rx Gain: 14dB

Applications

- Wireless Automated Metering
- Wireless Alarm Systems
- Portable Battery Powered Equipment
- Smart Energy
- 925MHz ISM Band Application
- Single Chip RF Front End Module

Ordering Information

RFFM6909SB	Standard 5-piece bag
RFFM6909SQ	Standard 25-piece bag
RFFM6909SR	Standard 100-piece reel
RFFM6909TR13	Standard 2500-pieces reel
RFFM6909PCK-410	Fully assembled eval board w/5-piece sample bag

RF Micro Devices Inc. 7628 Thorndike Road, Greensboro, NC 27409-9421
For sales or technical support, contact RFMD at +1.336.678.5570 or customerservice@rfmd.com.

DS140905

RF MICRO DEVICES® and RFMD® are trademarks of RFMD, LLC. BLUETOOTH is a trademark owned by Bluetooth SIG, Inc., U.S.A. and licensed for use by RFMD. All other trade names, trademarks, and registered trademarks are the property of their respective owners. ©2013, RF Micro Devices, Inc.

Absolute Maximum Ratings

Parameter	Rating	Unit
Battery Voltage	5.5	V
Operating Temperature	-40 to 85	°C
Storage Temperature	-40 to 150	°C
ESD, HBM (all pins)	1000	V
ESD, CDM (all pins)	1000	V
MSL	MSL 3	
Maximum Input Power to TX Port	+25	dBm
Maximum Input Power to ANT1/ANT2 Switch	+20	dBm
Maximum Input Power to BAL_IN	+10	dBm

Caution! ESD sensitive device.

RFMD Green: RoHS status based on EU Directive 2011/65/EU (at time of this document revision), halogen free per IEC 61249-2-21, < 1000ppm each of antimony trioxide in polymeric materials and red phosphorus as a flame retardant, and <2% antimony in solder.

Exceeding any one or a combination of the Absolute Maximum Rating conditions may cause permanent damage to the device. Extended application of Absolute Maximum Rating conditions to the device may reduce device reliability. Specified typical performance or functional operation of the device under Absolute Maximum Rating conditions is not implied.

Nominal Operating Parameters

Parameter	Specification			Unit	Condition
	Min	Typ	Max		
Frequency	922	925	929	MHz	
RF Port Impedance		50		Ω	Single-ended
		75		Ω	Balanced; RX_P and RX_N
Operating Temperature	-40		85	°C	
Storage Temperature	-40		150	°C	
Total Leakage Current		1	10	µA	
RX Section					**V_{CC} = 3.6V, C_TX = 0V, C_RX = 3.4V, Temperature = 25°C; Unless otherwise specified.**
Battery Voltage	3.3	3.6	4.0	V	V_{CC}
RX Gain	12	14	16	dB	
Noise Figure		1.5	2	dB	
Input IP3		1		dBm	
Input Return Loss	7	10		dB	
Output Return Loss	10	15		dB	
LNA Current	6	8	12	mA	Over all conditions
V_{CC} RX Quiescent Current		9		mA	
Amplitude Imbalance	-0.6		+0.6	dB	BAL_IN to RX_N/RX_P
Phase Imbalance	-10		+10	Deg	
Antenna Switch Section					
Isolation		25		dB	Any used port to any unused port
TX Insertion Loss		0.7	1.2	dB	Pins 2, 4 to Pins 13
RX Insertion Loss		1.0	1.5	dB	Pins 2, 4 to Pins 17
Logic Voltage, High	3.1	3.4	3.8	V	All Logic I/Os, V_{BAT} -0.2V
Logic Voltage, Low	0.0		0.2	V	All Logic I/Os
Logic Current, High		5	10	µA	
Logic Current, Low		0.4		µA	

The information in this publication is believed to be accurate. However, no responsibility is assumed by RF Micro Devices, Inc. ("RFMD") for its use, nor for any infringement of patents or other rights of third parties resulting from its use. No license is granted by implication or otherwise under any patent or patent rights of RFMD. RFMD reserves the right to change component circuitry, recommended application circuitry and specifications at any time without prior notice.

Switch Control Truth Table

Operating Mode	C_TX	C_RX	C_ANT
TX-ANT1	1	0	0
TX-ANT2	1	0	1
RX-ANT1	0	1	0
RX-ANT2	0	1	1
All Off	0	0	0

Note:
*Switch Control Logic High=Min 3.1V to Max 3.8V
*Switch Control Logic Low= 0.0V to Max 0.2V

The information in this publication is believed to be accurate. However, no responsibility is assumed by RF Micro Devices, Inc. ("RFMD") for its use, nor for any infringement of patents or other rights of third parties resulting from its use. No license is granted by implication or otherwise under any patent or patent rights of RFMD. RFMD reserves the right to change component circuitry, recommended application circuitry and specifications at any time without prior notice.

Pin Out

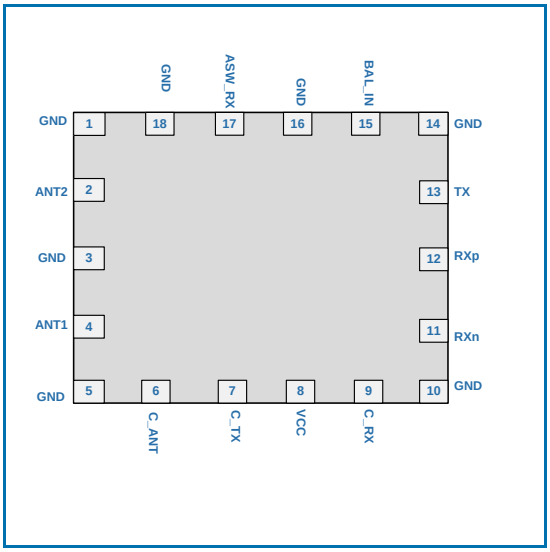

Package Outline and Branding Drawing (Dimensions in millimeters)

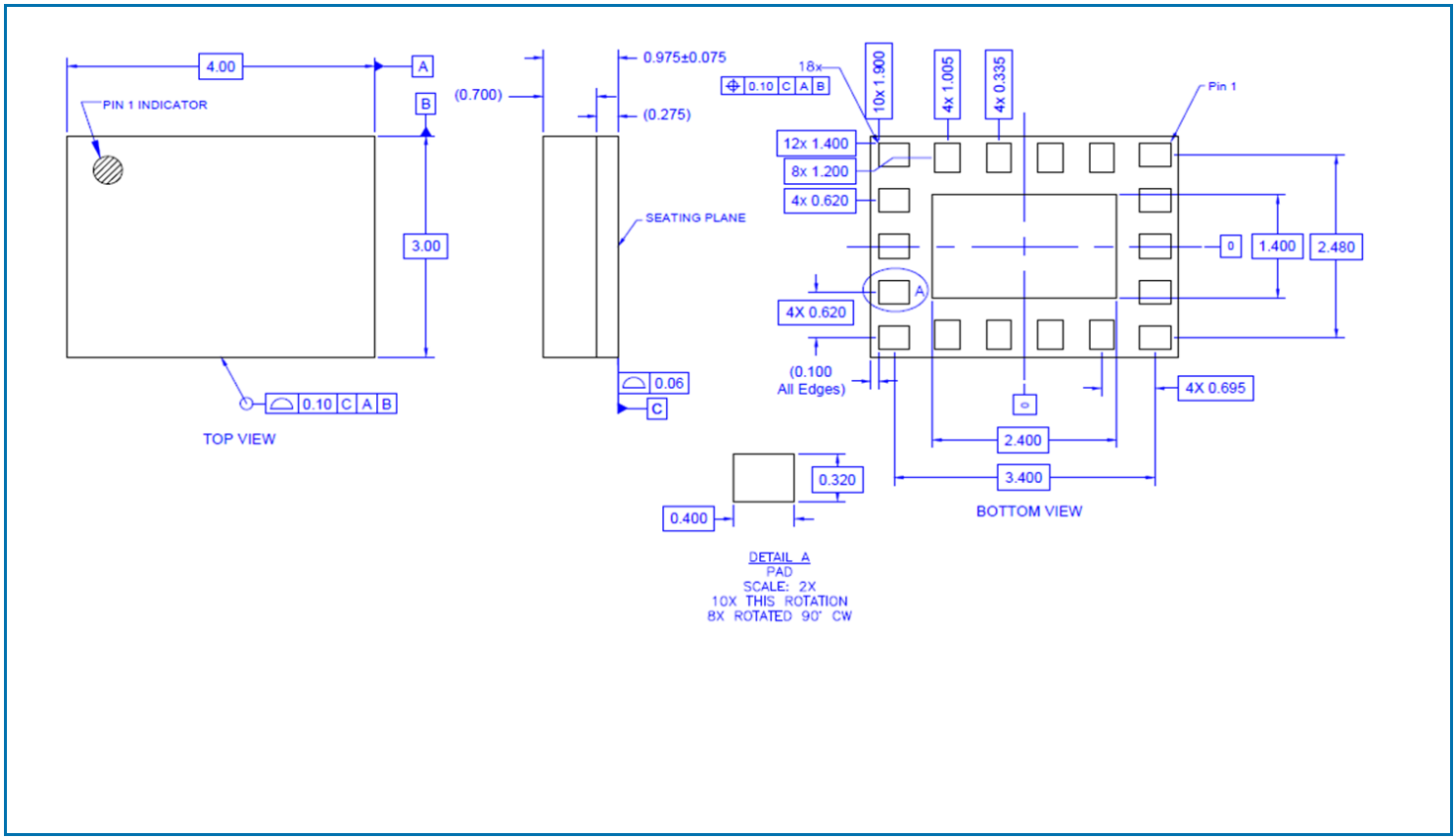

The information in this publication is believed to be accurate. However, no responsibility is assumed by RF Micro Devices, Inc. ("RFMD") for its use, nor for any infringement of patents or other rights of third parties resulting from its use. No license is granted by implication or otherwise under any patent or patent rights of RFMD. RFMD reserves the right to change component circuitry, recommended application circuitry and specifications at any time without prior notice.

Pin Names and Descriptions

Pin	Name	Description
1	GND	Ground
2	ANT2	Antenna 2 Connect Port
3	GND	Ground
4	ANT1	Antenna 1 Connect Port
5	GND	Ground
6	C_ANT	Antenna Selection Control Line
7	C_TX	Transmit Selection Control Line
8	VCC	Supply Voltage
9	C_RX	Receive Selection Control Line
10	GND	Ground
11	RXN	Receive Port Negative
12	RXP	Receive Port Positive
13	TX	Transmit Port
14	GND	Ground
15	BAL_IN	Input to Balun
16	GND	Ground
17	ASW_RX	Antenna Switched Rx Output
18	GND	Ground

RF Micro Devices Inc. 7628 Thorndike Road, Greensboro, NC 27409-9421
For sales or technical support, contact RFMD at +1.336.678.5570 or customerservice@rfmd.com.

The information in this publication is believed to be accurate. However, no responsibility is assumed by RF Micro Devices, Inc. ("RFMD") for its use, nor for any infringement of patents or other rights of third parties resulting from its use. No license is granted by implication or otherwise under any patent or patent rights of RFMD. RFMD reserves the right to change component circuitry, recommended application circuitry and specifications at any time without prior notice.

Общество с ограниченной ответственностью «МосЧип» ИНН 7719860671 / КПП 771901001
Адрес: 105318, г.Москва, ул.Щербаковская д.3, офис 1107

Данный компонент на территории Российской Федерации

Вы можете приобрести в компании MosChip.

Для оперативного оформления запроса Вам необходимо перейти по данной ссылке:

http://moschip.ru/get-element

Вы можете разместить у нас заказ для любого Вашего проекта, будь то серийное производство или разработка единичного прибора.

В нашем ассортименте представлены ведущие мировые производители активных и пассивных электронных компонентов.

Нашей специализацией является поставка электронной компонентной базы двойного назначения, продукции таких производителей как XILINX, Intel (ex.ALTERA), Vicor, Microchip, Texas Instruments, Analog Devices, Mini-Circuits, Amphenol, Glenair.

Сотрудничество с глобальными дистрибьюторами электронных компонентов, предоставляет возможность заказывать и получать с международных складов практически любой перечень компонентов в оптимальные для Вас сроки.

На всех этапах разработки и производства наши партнеры могут получить квалифицированную поддержку опытных инженеров.

Система менеджмента качества компании отвечает требованиям в соответствии с ГОСТ Р ИСО 9001, ГОСТ РВ 0015-002 и ЭС РД 009

Офис по работе с юридическими лицами:

105318, г.Москва, ул.Щербаковская д.3, офис 1107, 1118, ДЦ «Щербаковский»

Телефон: +7 495 668-12-70 (многоканальный)

Факс: +7 495 668-12-70 (доб.304)

E-mail: info@moschip.ru

Skype отдела продаж:
moschip.ru
moschip.ru_4
moschip.ru_6
moschip.ru_9