Hyperfast Rectifier, 2 x 10 A FRED Pt®

VS-20CTH03SPbF

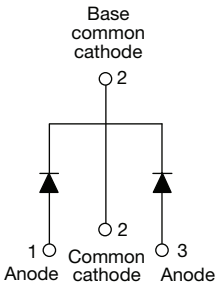

D²PAK

VS-20CTH03-1PbF

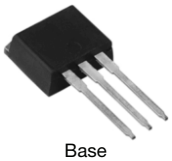

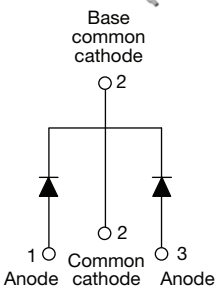

TO-262

FEATURES

- Hyperfast recovery time
- Low forward voltage drop
- Low leakage current
- 175 °C operating junction temperature
- Meets MSL level 1, per J-STD-020, LF maximum peak of 260 °C
- Halogen-free according to IEC 61249-2-21 definition
- Compliant to RoHS directive 2002/95/EC
- AEC-Q101 qualified

RoHS COMPLIANT
HALOGEN FREE

DESCRIPTION/APPLICATIONS

Vishay HPP's 300 V series are the state of the art hyperfast recovery rectifiers designed with optimized performance of forward voltage drop and hyperfast recovery time.
The planar structure and the platinum doped life time control guarantee the best overall performance, ruggedness and reliability characteristics.
These devices are intended for use in the output rectification stage of SMPS, UPS, dc-to-dc converters as well as freewheeling diode in low voltage inverters and chopper motor drives.
Their extremely optimized stored charge and low recovery current minimize the switching losses and reduce over dissipation in the switching element and snubbers.

PRODUCT SUMMARY	
t_{rr} (maximum)	35 ns
$I_{F(AV)}$	2 x 10 A
V_R	300 V

ABSOLUTE MAXIMUM RATINGS					
PARAMETER		SYMBOL	TEST CONDITIONS	MAX.	UNITS
Peak repetitive reverse voltage		V_{RRM}		300	V
Average rectified forward current	per diode	$I_{F(AV)}$	T_C = 160 °C	10	A
	per device			20	
Non-repetitive peak surge current		I_{FSM}	T_J = 25 °C	120	
Operating junction and storage temperatures		T_J, T_{Stg}		- 65 to 175	°C

ELECTRICAL SPECIFICATIONS (T_J = 25 °C unless otherwise specified)						
PARAMETER	SYMBOL	TEST CONDITIONS	MIN.	TYP.	MAX.	UNITS
Breakdown voltage, blocking voltage	V_{BR}, V_R	I_R = 100 µA	300	-	-	V
Forward voltage	V_F	I_F = 10 A	-	1.05	1.25	
		I_F = 10 A, T_J = 125 °C	-	0.85	0.95	
Reverse leakage current	I_R	V_R = V_R rated	-	-	20	µA
		T_J = 125 °C, V_R = V_R rated	-	6	200	
Junction capacitance	C_T	V_R = 300 V	-	30	-	pF
Series inductance	L_S	Measured lead to lead 5 mm from package body	-	8	-	nH

DYNAMIC RECOVERY CHARACTERISTICS (T_C = 25 °C unless otherwise specified)							
PARAMETER	SYMBOL	TEST CONDITIONS		MIN.	TYP.	MAX.	UNITS
Reverse recovery time	t_{rr}	I_F = 1.0 A, dI_F/dt = 50 A/μs, V_R = 30 V		-	-	35	ns
		I_F = 1.0 A, dI_F/dt = 100 A/μs, V_R = 30 V		-	-	30	
		T_J = 25 °C	I_F = 10 A dI_F/dt = 200 A/μs V_R = 200 V	-	31	-	
		T_J = 125 °C		-	42	-	
Peak recovery current	I_{RRM}	T_J = 25 °C		-	2.4	-	A
		T_J = 125 °C		-	5.6	-	
Reverse recovery charge	Q_{rr}	T_J = 25 °C		-	36	-	nC
		T_J = 125 °C		-	120	-	

THERMAL - MECHANICAL SPECIFICATIONS						
PARAMETER	SYMBOL	TEST CONDITIONS	MIN.	TYP.	MAX.	UNITS
Maximum junction and storage temperature range	T_J, T_{Stg}		- 65	-	175	°C
Thermal resistance, junction to case per diode	R_{thJC}		-	-	1.5	°C/W
Weight			-	2.0	-	g
			-	0.07	-	oz.
Mounting torque			6.0 (5.0)	-	12 (10)	kgf · cm (lbf · in)
Marking device		Case style D^2PAK	20CTH03S			
		Case style TO-262	20CTH03-1			

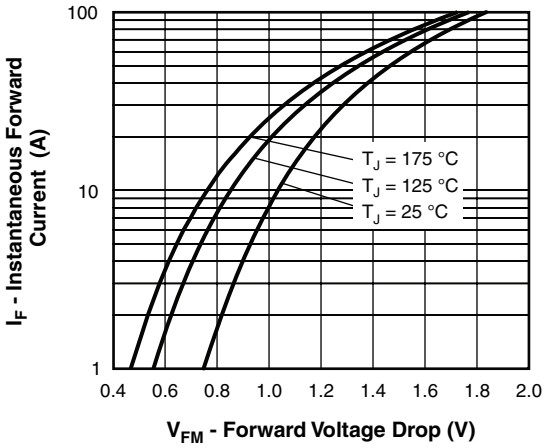

Fig. 1 - Maximum Forward Voltage Drop Characteristics

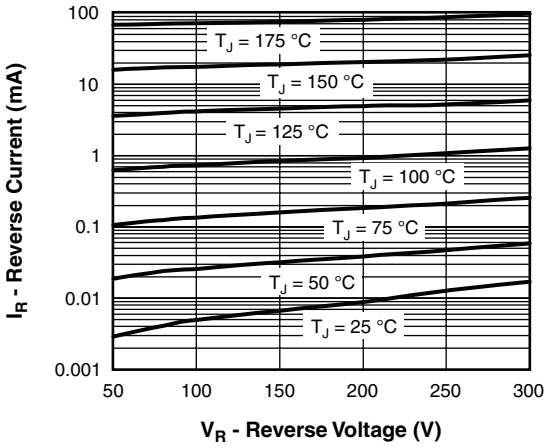

Fig. 2 - Typical Values of Reverse Current vs. Reverse Voltage

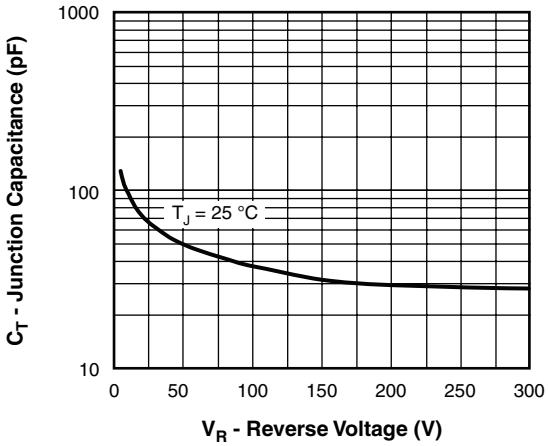

Fig. 3 - Typical Junction Capacitance vs. Reverse Voltage

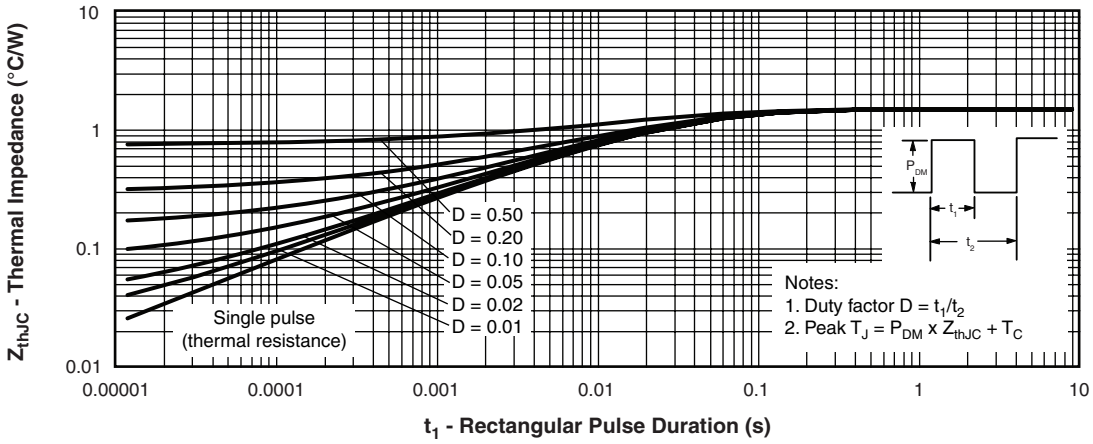

Fig. 4 - Maximum Thermal Impedance Z_{thJC} Characteristics

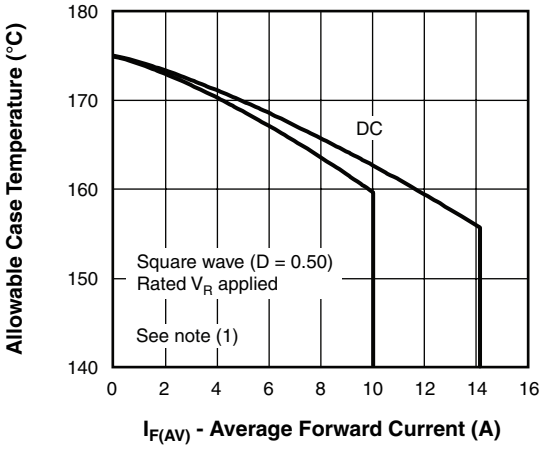

Fig. 5 - Maximum Allowable Case Temperature vs. Average Forward Current

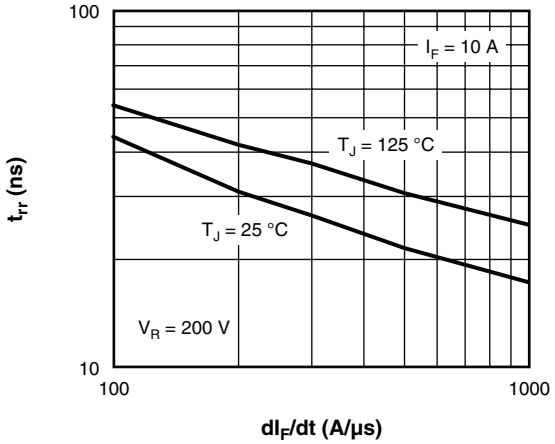

Fig. 7 - Typical Reverse Recovery Time vs. dI_F/dt

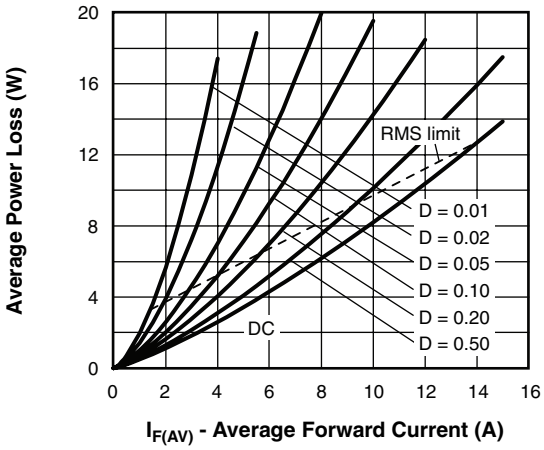

Fig. 6 - Forward Power Loss Characteristics

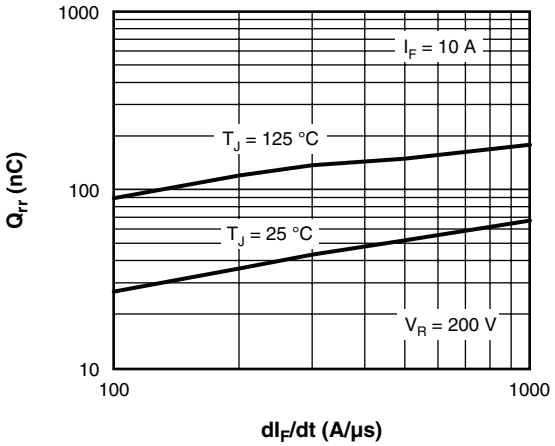

Fig. 8 - Typical Stored Charge vs. dI_F/dt

Note

(1) Formula used: $T_C = T_J - (Pd + Pd_{REV}) \times R_{thJC}$;
Pd = Forward power loss = $I_{F(AV)} \times V_{FM}$ at ($I_{F(AV)}$/D) (see fig. 6);
Pd_{REV} = Inverse power loss = $V_{R1} \times I_R$ (1 - D); I_R at V_{R1} = Rated V_R

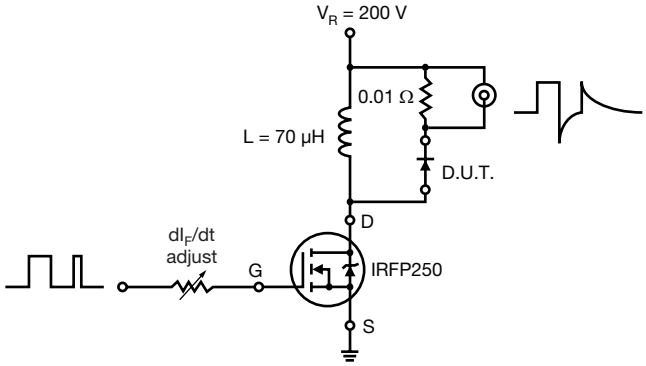

Fig. 9 - Reverse Recovery Parameter Test Circuit

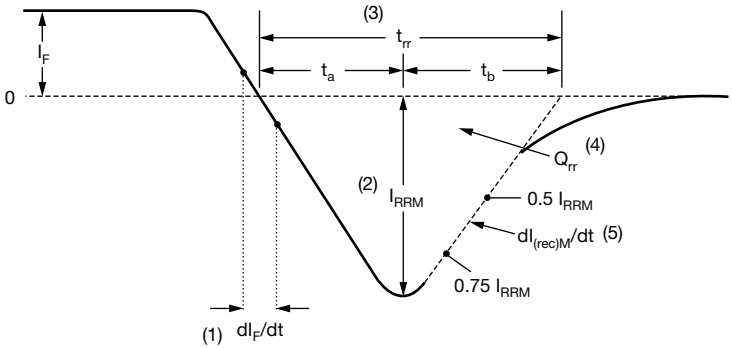

(1) dI_F/dt - rate of change of current through zero crossing

(2) I_{RRM} - peak reverse recovery current

(3) t_{rr} - reverse recovery time measured from zero crossing point of negative going I_F to point where a line passing through 0.75 I_{RRM} and 0.50 I_{RRM} extrapolated to zero current.

(4) Q_{rr} - area under curve defined by t_{rr} and I_{RRM}

$$Q_{rr} = \frac{t_{rr} \times I_{RRM}}{2}$$

(5) $dI_{(rec)M}/dt$ - peak rate of change of current during t_b portion of t_{rr}

Fig. 10 - Reverse Recovery Waveform and Definitions

ORDERING INFORMATION TABLE

Device code	VS-	20	C	T	H	03	S	TRL	PbF
	1	2	3	4	5	6	7	8	9

1 - HPP product suffix
2 - Current rating (20 A)
3 - C = Common cathode
4 - T = TO-220, D^2PAK
5 - H = Hyperfast rectifier
6 - Voltage rating (03 = 300 V)
7 - • S = D^2PAK
• -1 = TO-262
8 - • None = Tube (50 pieces)
• TRL = Tape and reel (left oriented, for D^2PAK package)
• TRR = Tape and reel (right oriented, for D^2PAK package)
9 - PbF = Lead (Pb)-free

LINKS TO RELATED DOCUMENTS	
Dimensions	www.vishay.com/doc?95014
Part marking information	www.vishay.com/doc?95008
Packaging information	www.vishay.com/doc?95032

D²PAK, TO-262

DIMENSIONS FOR D²PAK in millimeters and inches

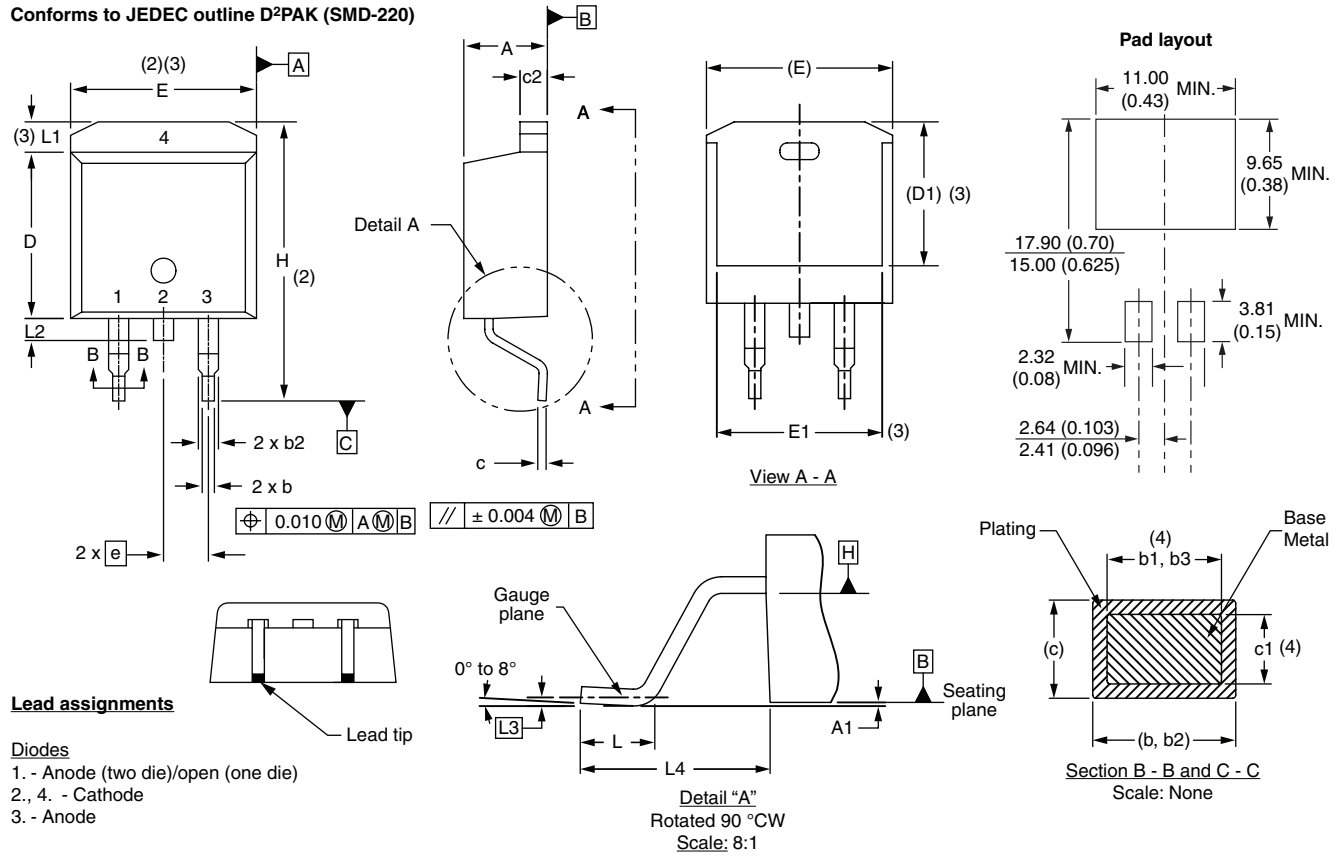

Lead assignments

Diodes
1. - Anode (two die)/open (one die)
2., 4. - Cathode
3. - Anode

SYMBOL	MILLIMETERS		INCHES		NOTES
	MIN.	MAX.	MIN.	MAX.	
A	4.06	4.83	0.160	0.190	
A1	0.00	0.254	0.000	0.010	
b	0.51	0.99	0.020	0.039	
b1	0.51	0.89	0.020	0.035	4
b2	1.14	1.78	0.045	0.070	
b3	1.14	1.73	0.045	0.068	4
c	0.38	0.74	0.015	0.029	
c1	0.38	0.58	0.015	0.023	4
c2	1.14	1.65	0.045	0.065	
D	8.51	9.65	0.335	0.380	2

SYMBOL	MILLIMETERS		INCHES		NOTES
	MIN.	MAX.	MIN.	MAX.	
D1	6.86	8.00	0.270	0.315	3
E	9.65	10.67	0.380	0.420	2, 3
E1	7.90	8.80	0.311	0.346	3
e	2.54 BSC		0.100 BSC		
H	14.61	15.88	0.575	0.625	
L	1.78	2.79	0.070	0.110	
L1	-	1.65	-	0.066	3
L2	1.27	1.78	0.050	0.070	
L3	0.25 BSC		0.010 BSC		
L4	4.78	5.28	0.188	0.208	

Notes

(1) Dimensioning and tolerancing per ASME Y14.5 M-1994
(2) Dimension D and E do not include mold flash. Mold flash shall not exceed 0.127 mm (0.005") per side. These dimensions are measured at the outmost extremes of the plastic body
(3) Thermal pad contour optional within dimension E, L1, D1 and E1
(4) Dimension b1 and c1 apply to base metal only
(5) Datum A and B to be determined at datum plane H
(6) Controlling dimension: inch
(7) Outline conforms to JEDEC outline TO-263AB

DIMENSIONS FOR TO-262 in millimeters and inches

Modified JEDEC outline TO-262

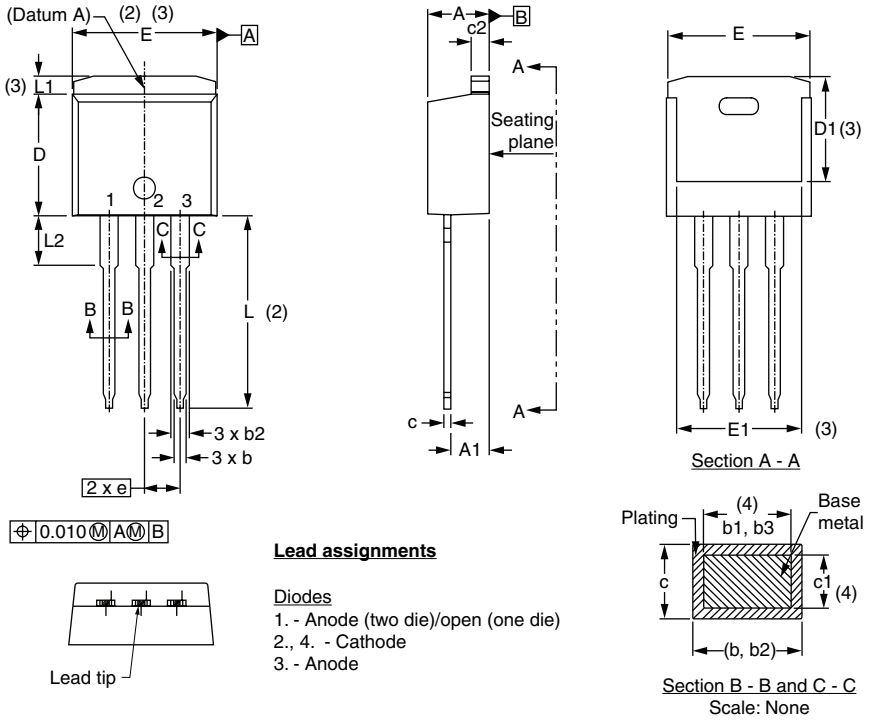

Lead assignments

Diodes
1. - Anode (two die)/open (one die)
2., 4. - Cathode
3. - Anode

SYMBOL	MILLIMETERS		INCHES		NOTES
	MIN.	MAX.	MIN.	MAX.	
A	4.06	4.83	0.160	0.190	
A1	2.03	3.02	0.080	0.119	
b	0.51	0.99	0.020	0.039	
b1	0.51	0.89	0.020	0.035	4
b2	1.14	1.78	0.045	0.070	
b3	1.14	1.73	0.045	0.068	4
c	0.38	0.74	0.015	0.029	
c1	0.38	0.58	0.015	0.023	4
c2	1.14	1.65	0.045	0.065	
D	8.51	9.65	0.335	0.380	2
D1	6.86	8.00	0.270	0.315	3
E	9.65	10.67	0.380	0.420	2, 3
E1	7.90	8.80	0.311	0.346	3
e	2.54 BSC		0.100 BSC		
L	13.46	14.10	0.530	0.555	
L1	-	1.65	-	0.065	3
L2	3.56	3.71	0.140	0.146	

Notes

(1) Dimensioning and tolerancing as per ASME Y14.5M-1994
(2) Dimension D and E do not include mold flash. Mold flash shall not exceed 0.127 mm (0.005") per side. These dimensions are measured at the outmost extremes of the plastic body
(3) Thermal pad contour optional within dimension E, L1, D1 and E1
(4) Dimension b1 and c1 apply to base metal only
(5) Controlling dimension: inches
(6) Outline conform to JEDEC TO-262 except A1 (maximum), b (minimum) and D1 (minimum) where dimensions derived the actual package outline

Disclaimer

ALL PRODUCT, PRODUCT SPECIFICATIONS AND DATA ARE SUBJECT TO CHANGE WITHOUT NOTICE TO IMPROVE RELIABILITY, FUNCTION OR DESIGN OR OTHERWISE.

Vishay Intertechnology, Inc., its affiliates, agents, and employees, and all persons acting on its or their behalf (collectively, "Vishay"), disclaim any and all liability for any errors, inaccuracies or incompleteness contained in any datasheet or in any other disclosure relating to any product.

Vishay makes no warranty, representation or guarantee regarding the suitability of the products for any particular purpose or the continuing production of any product. To the maximum extent permitted by applicable law, Vishay disclaims (i) any and all liability arising out of the application or use of any product, (ii) any and all liability, including without limitation special, consequential or incidental damages, and (iii) any and all implied warranties, including warranties of fitness for particular purpose, non-infringement and merchantability.

Statements regarding the suitability of products for certain types of applications are based on Vishay's knowledge of typical requirements that are often placed on Vishay products in generic applications. Such statements are not binding statements about the suitability of products for a particular application. It is the customer's responsibility to validate that a particular product with the properties described in the product specification is suitable for use in a particular application. Parameters provided in datasheets and/or specifications may vary in different applications and performance may vary over time. All operating parameters, including typical parameters, must be validated for each customer application by the customer's technical experts. Product specifications do not expand or otherwise modify Vishay's terms and conditions of purchase, including but not limited to the warranty expressed therein.

Except as expressly indicated in writing, Vishay products are not designed for use in medical, life-saving, or life-sustaining applications or for any other application in which the failure of the Vishay product could result in personal injury or death. Customers using or selling Vishay products not expressly indicated for use in such applications do so at their own risk and agree to fully indemnify and hold Vishay and its distributors harmless from and against any and all claims, liabilities, expenses and damages arising or resulting in connection with such use or sale, including attorneys fees, even if such claim alleges that Vishay or its distributor was negligent regarding the design or manufacture of the part. Please contact authorized Vishay personnel to obtain written terms and conditions regarding products designed for such applications.

No license, express or implied, by estoppel or otherwise, to any intellectual property rights is granted by this document or by any conduct of Vishay. Product names and markings noted herein may be trademarks of their respective owners.

Общество с ограниченной ответственностью «МосЧип» ИНН 7719860671 / КПП 771901001
Адрес: 105318, г.Москва, ул.Щербаковская д.3, офис 1107

Данный компонент на территории Российской Федерации

Вы можете приобрести в компании MosChip.

Для оперативного оформления запроса Вам необходимо перейти по данной ссылке:

http://moschip.ru/get-element

Вы можете разместить у нас заказ для любого Вашего проекта, будь то серийное производство или разработка единичного прибора.

В нашем ассортименте представлены ведущие мировые производители активных и пассивных электронных компонентов.

Нашей специализацией является поставка электронной компонентной базы двойного назначения, продукции таких производителей как XILINX, Intel (ex.ALTERA), Vicor, Microchip, Texas Instruments, Analog Devices, Mini-Circuits, Amphenol, Glenair.

Сотрудничество с глобальными дистрибьюторами электронных компонентов, предоставляет возможность заказывать и получать с международных складов практически любой перечень компонентов в оптимальные для Вас сроки.

На всех этапах разработки и производства наши партнеры могут получить квалифицированную поддержку опытных инженеров.

Система менеджмента качества компании отвечает требованиям в соответствии с ГОСТ Р ИСО 9001, ГОСТ РВ 0015-002 и ЭС РД 009

Офис по работе с юридическими лицами:

105318, г.Москва, ул.Щербаковская д.3, офис 1107, 1118, ДЦ «Щербаковский»

Телефон: +7 495 668-12-70 (многоканальный)

Факс: +7 495 668-12-70 (доб.304)

E-mail: info@moschip.ru

Skype отдела продаж:
moschip.ru
moschip.ru_4
moschip.ru_6
moschip.ru_9