CONEXANT

Single-Chip Cable Modem Solution

DOCSIS™ 2.0-Based

CX24951

Conexant's next generation cable modem solution offers a DOCSIS 2.0-based single-chip modem while providing dual software programmable network processing engines

Conexant's broadband communications portfolio includes a comprehensive suite of semiconductor solutions that enable the digital home and information network. The InfoSurge™ family of products, supporting broadband cable modem applications, presents the industry with yet another example of Conexant's ability to exceed the needs of a growing market segment. The CX24951, Conexant's DOCSIS 2.0-based single-chip cable modem solution, provides backwards compatibility with the DOCSIS 1.1 and the DOCSIS 1.0 standards. The world's fastest, lowest power and smallest cable modem solution, the CX24951, offers 500 MIPS of processing power while consuming just 550mW in a 17mm x 17mm BGA package.

The CX24951 fully supports the new upstream physical-layer modulation technologies A-TDMA (Advanced Time Division Multiple Access) and S-CDMA (Synchronous Code Division Multiple Access) as specified in DOCSIS 2.0 standard. These new modulation techniques significantly increase upstream cable bandwidth for data transmissions (up to 30Mbps) without requiring any physical rebuilding of cable networks.

The CX24951's 500 MIPS and software programmable dual processor architecture with on-chip memory for cable MAC and application layer processing makes it ideally suited for CableHome™ and PacketCable™ applications.

Dual Programmable Network Processors

The CX24951 utilizes the proven software programmable dual processor architecture of its predecessor, the CX24943, and further boosts its performance by increasing the instruction memory size to 128K bytes. The CX24951 is pin compatible with the CX24943.

The dual network processing engine architecture offers real-time-critical packet management processing and superior performance. The software programmability of this architecture accommodates application specific requirements, worldwide standards, and manufacturers' unique value added features for maximum flexibility.

CX24951 Distinguishing Features

- A-TDMA and S-CDMA DOCSIS 2.0 upstream modulation
- High level of integration (Single monolithic IC)
- Dual software programmable network processing engines
- 500 MIPS of processing power
- Less than 550mW typical power dissipation
- Embedded IEEE 802.3 MAC with MII
- 12Mb USB 1.1 communications transceiver
- Support for DOCSIS/EuroDOCSIS 2.0/1.1/1.0, DVB and proprietary standards
- CableHome and PacketCable compliant
- High density, 17mm x 17mm BGA package

Part Number	CX24951
Description	Single-Chip Cable Modem

The dual processor architecture of the CX24951 allows it to be used in CableHome applications, without needing an additional network processor for the firewall and routing features required by the CableHome standard. The firewall and routing algorithms required by CableHome take less than 10 percent of the 500 MIPS processing power of the CX24951, leaving plenty of processing power left for developing custom networking applications.

The integrated MII port and the PCMCIA functionality of the integrated host port allow the CX24951 to provide a seamless interface to an array of networking peripherals such as wireless LANs (802.11a/b), HomePlug transceivers, HPNA solutions, and multi-port Ethernet Switches.

The CX24951 also supports PacketCable applications by interfacing to Conexant's voice DSP products to execute voice processing algorithms.

Highly Integrated

The CX24951 supports a number of interfaces including a USB 1.1 communications transceiver, an IEEE 802.3 10/100 Ethernet Media Access Controller (MAC) with a Media Independent Interface (MII) for access to home networking standards. Examples are HPNA 2.0, HomePlug 1.0 and a host interface which supports seamless connectivity to any PCMCIA compliance device such as IEEE 802.11a and IEEE 802.11b wireless transceivers. The CX24951 supports integrated and stand alone cable modems, home networking gateway products, IP (Internet Protocol) telephony products, and digital set-top boxes.

The CX24951 was developed using leading-edge process and packaging technologies. This helps drive down the size of the monolithic IC, package and power, while allowing clock rates to increase. The CX24951 dissipates less than 550mW of power setting a new standard for the industry.

The CX24951, through its high level of integration, enables manufacturers to develop a complete cable modem with a minimal number of additional components as shown in the CX24951-based cable modem block diagram.

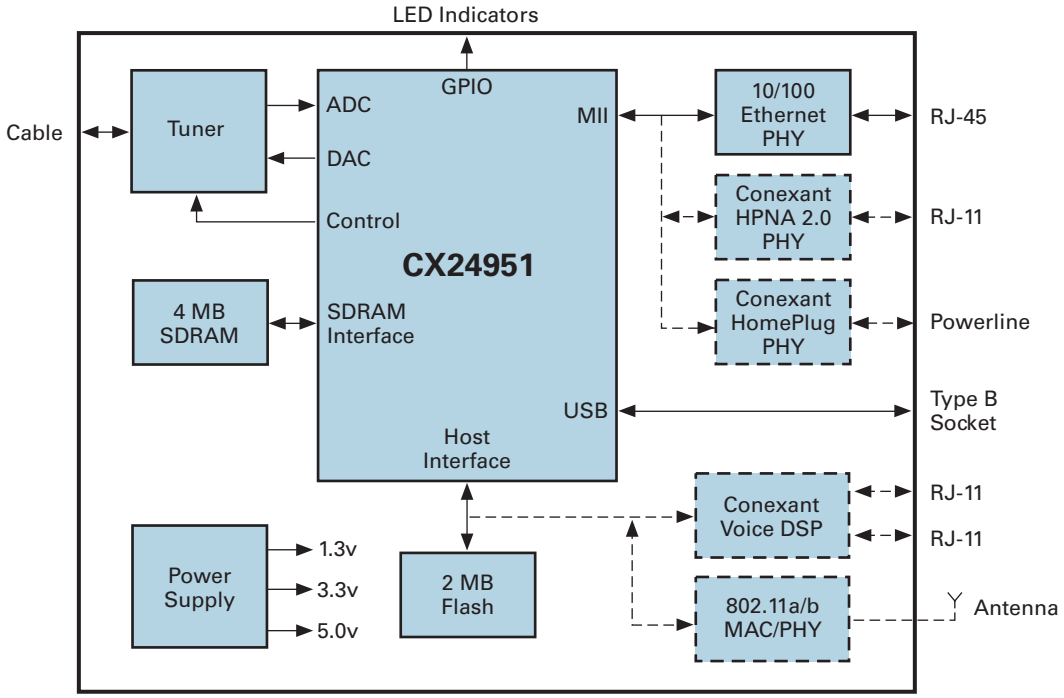

CX24951-based Cable Modem Block Diagram

Increased Performance

Conexant's seventh-generation physical-layer downstream receiver includes a 10-bit A/D that accepts a direct IF signal (at 44 or 36 MHz) and a QPSK/16/32/64/128/256 QAM demodulator with Annex A, B and C forward error correction. The CX24951 also contains an 11-bit D/A converter, which can accommodate 65 MHz of upstream bandwidth for EuroDOCSIS and DVB applications, and a QPSK/8/16/32/64/128 QAM burst upstream modulator. Conexant's proven PHY technology exceeds all DOCSIS/EuroDOCSIS 2.0/1.1/1.0 requirements for low BER in noise-filled environments.

The CX24951 is the fastest solution in the industry with integrated dual software programmable network processing engines on board. Its unique packet management, unified memory architecture, and advanced system buses, maximize performance by allowing segmentation of real-time-critical DOCSIS/EuroDOCSIS 2.0/1.1/1.0 functions from non real-time-critical application processes. The CX24951 processor performance and unique architecture enables DOCSIS/EuroDOCSIS 2.0/1.1/1.0 and other software applications, including VPN firewall for added security and routing for cable home or VoIP for PacketCable.

The CX24951 also incorporates a PHS (Payload Header Suppression requirement introduced in DOCSIS 1.1) engine in hardware. Implementation of PHS in hardware further boosts the performance of the CX24951 by relieving the internal CPU from performing repeated filtering operations.

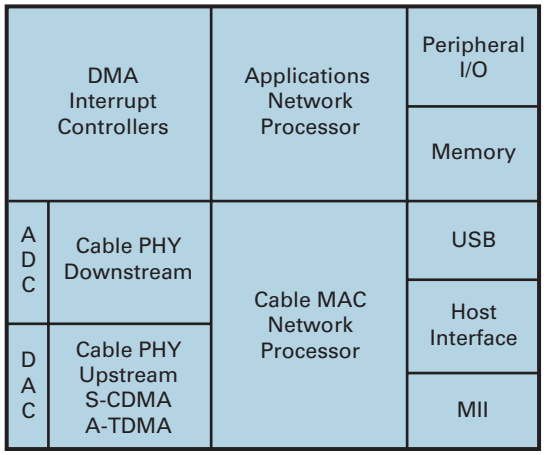

CX24951 Single-Chip Cable Modem IC Block Diagram

CX24951 Features

Flexible Platform

Cable modem manufacturers have to devote a significant amount of resources to bring new certifiable solutions to market. The unique architecture of the CX24951 provides a number of advantages for cable modem manufacturers and cable operators alike. The software programmability of the dual network processing engine allows manufacturers to customize the CX24951 for application specific requirements, both at the cable MAC and software applications layer.

The software programmability of the CX24951 allows one base platform to support numerous products, including PacketCable, CableHome and set-top box products as shown in the CX24951-based cable modem block diagram. In addition, the architectural similarities between the CX24951 and its predecessor, the CX24943, allows for maximum reuse of certified code.

The CX24951 provides the ability to adapt to a multitude of standards by downloading different software into the embedded dual network processing engine, including DOCSIS/EuroDOCSIS 2.0/1.1/1.0, DVB and proprietary standards. Finally, cable operators can download complex feature enhancements above and beyond simple code upgrades to field-deployed solutions, minimizing truck rolls and equipment obsolescence.

Complete Hardware and Software Solution

To reduce the resources and development time required to bring CX24951-based cable modem solutions to market, Conexant provides complete certifiable DOCSIS/EuroDOCSIS 2.0/1.1/1.0 cable modem reference designs which incorporate all of the hardware and software needed for DOCSIS certification.

Cable modem reference designs include Conexant software that is compliant to DOCSIS/EuroDOCSIS 2.0/1.1/1.0 and include the USB drivers that meet Microsoft's Windows Hardware Quality Lab (WHQL) requirements. Additional software enhancements that are above and beyond standards-based requirements are also included in this complete software offering.

CX24951 Features

Cable PHY Downstream
- 10-bit A/D
- Direct IF sampling at 44 and 36 MHz
- QPSK/16/32/64/128/256 QAM demodulator
- Programmable equalization
- Annex A, B and C FEC

Cable PHY Upstream
- 11-bit D/A
- A-TDMA
- S-CDMA with Turbo Trellis coding
- QPSK/8/16/32/64/128 QAM burst modulator
- Programmable pre-equalization

DMA Interrupt Controller
- 20 asynchronous channels
- Memory to memory moves: aligned/unaligned
- Source/destination mode for simple data transfer
- Circular/linked buffer support for inbound/outbound data

Peripheral I/O
- 32 GPIO
- JTAG boundary scan
- UART

Cable MAC Network Processor
- Software Programmable
  - DOCSIS 2.0/1.1/1.0 compliant
  - EuroDOCSIS 2.0/1.1/1.0 compliant
  - DVB compliant
  - Fixed wireless compliant
  - Proprietary standards
- Two PHS engines
- Internal 64KB data memory
- Internal 128KB Instruction memory
- Three 56-bit DES/CRC engines
- PID, SID, DA/SA, MAC, IP and LLC filtering

Application Network Processor
- ARM940T microcontroller
- Up to 225 MHz operation
- 4KB instruction and 4KB data cache
- Embedded ICE and debug extensions
- HCS 16- and 32-bit CRC single-cycle engines

MII
- IEEE 802.3 MAC layer
- Networking technologies
  - 10/100 Ethernet
  - Conexant HPNA 2.0
  - Conexant HomePlug 1.0

Host Interface
- Master mode
  - 16-bit data
  - 8-chip selects
- Supports Flash, IP telephony, PCMCIA
  - IEEE 802.11a or IEEE 802.11b
  - 16/32-bit Slave mode (external host and test)

USB 1.1
- Integrated 12 Mb transceiver
- Communications peripheral device

Memory
- Internal 8K x 32 SRAM
- External SDRAM Interface
  - 16-bit interface
  - Supports both 4MB and 8MB technologies

Phase-Locked Loops (4)
- TDM clock and frame sync generator
- Transmit clock generator
- Supplied 25MHz Ethernet reference clock
- Internal USB clock

Miscellaneous Functions
- Watchdog timer
- Four additional timers
- Interrupt controller

Package and Power
- 228 PBGA (17mm x 17mm)
- All I/O at 3.3V
- Power supply: 3.3V and 1.3V
- <550 mW (typical)

Reference Designs
- DOCSIS 2.0/1.1/1.0
- EuroDOCSIS 2.0/1.1/1.0
- PCI

Product Applications (DOCSIS/EuroDOCSIS 2.0/1.1/1.0, DVB, Proprietary)
- Cable Modems with Ethernet
- Cable Modems with USB
- Cable Modems with IP Telephony
- PCI Cable Modem Card Internal (CMCI)
- Cable Modem with Home Networking
- PCMCIA Cable Modem
- Digital Set-Top Box with Cable Modem
- CPE Controlled Cable Modem (CCCM)

© 2002, Conexant Systems, Inc. All Rights Reserved. Conexant and the Conexant logo are registered trademarks of Conexant Systems, Inc. All other trademarks are owned by their respective owners. Although Conexant strives for accuracy in all its publications, this material may contain errors or omissions and is subject to change without notice. **THIS MATERIAL IS PROVIDED AS IS AND WITHOUT ANY EXPRESS OR IMPLIED WARRANTIES, INCLUDING MERCHANTABILITY, FITNESS FOR A PARTICULAR PURPOSE AND NON-INFRINGEMENT.** Conexant shall not be liable for any special, indirect, incidental or consequential damages as a result of its use.

www.conexant.com
General Information:
U.S. and Canada: (800) 854-8099
International: (949) 483-6996
Headquarters – Newport Beach
4311 Jamboree Rd, P.O. Box C
Newport Beach, CA 92660-3095

Order# 102113A

CONEXANT

Общество с ограниченной ответственностью «МосЧип» ИНН 7719860671 / КПП 771901001
Адрес: 105318, г.Москва, ул.Щербаковская д.3, офис 1107

Данный компонент на территории Российской Федерации

Вы можете приобрести в компании MosChip.

Для оперативного оформления запроса Вам необходимо перейти по данной ссылке:

http://moschip.ru/get-element

Вы можете разместить у нас заказ для любого Вашего проекта, будь то серийное производство или разработка единичного прибора.

В нашем ассортименте представлены ведущие мировые производители активных и пассивных электронных компонентов.

Нашей специализацией является поставка электронной компонентной базы двойного назначения, продукции таких производителей как XILINX, Intel (ex.ALTERA), Vicor, Microchip, Texas Instruments, Analog Devices, Mini-Circuits, Amphenol, Glenair.

Сотрудничество с глобальными дистрибьюторами электронных компонентов, предоставляет возможность заказывать и получать с международных складов практически любой перечень компонентов в оптимальные для Вас сроки.

На всех этапах разработки и производства наши партнеры могут получить квалифицированную поддержку опытных инженеров.

Система менеджмента качества компании отвечает требованиям в соответствии с ГОСТ Р ИСО 9001, ГОСТ РВ 0015-002 и ЭС РД 009

Офис по работе с юридическими лицами:

105318, г.Москва, ул.Щербаковская д.3, офис 1107, 1118, ДЦ «Щербаковский»

Телефон: +7 495 668-12-70 (многоканальный)

Факс: +7 495 668-12-70 (доб.304)

E-mail: info@moschip.ru

Skype отдела продаж:
moschip.ru
moschip.ru_4
moschip.ru_6
moschip.ru_9