Blackfin Embedded Processor

ADSP-BF534/ADSP-BF536/ADSP-BF537

FEATURES

Up to 600 MHz high performance Blackfin processor
- **Three 16-bit MACs, two 40-bit ALUs, four 8-bit video ALUs, 40-bit shifter**
- **RISC-like register and instruction model for ease of programming and compiler-friendly support**
- **Advanced debug, trace, and performance monitoring**

Wide range of operating voltages (see Operating Conditions on Page 24)

Qualified for Automotive Applications (see Automotive Products on Page 67)

Programmable on-chip voltage regulator

182-ball and 208-ball CSP_BGA packages

MEMORY

Up to 132K bytes of on-chip memory
- **Instruction SRAM/cache and instruction SRAM**
- **Data SRAM/cache plus additional dedicated data SRAM**
- **Scratchpad SRAM (see Table 1 on Page 3 for available memory configurations)**

External memory controller with glueless support for SDRAM and asynchronous 8-bit and 16-bit memories

Flexible booting options from external flash, SPI and TWI memory or from SPI, TWI, and UART host devices

Memory management unit providing memory protection

PERIPHERALS

IEEE 802.3-compliant 10/100 Ethernet MAC (ADSP-BF536 and ADSP-BF537 only)

Controller area network (CAN) 2.0B interface

Parallel peripheral interface (PPI), supporting ITU-R 656 video data formats

2 dual-channel, full-duplex synchronous serial ports (SPORTs), supporting 8 stereo I^2S channels

12 peripheral DMAs, 2 mastered by the Ethernet MAC

2 memory-to-memory DMAs with external request lines

Event handler with 32 interrupt inputs

Serial peripheral interface (SPI) compatible

2 UARTs with IrDA support

2-wire interface (TWI) controller

Eight 32-bit timer/counters with PWM support

Real-time clock (RTC) and watchdog timer

32-bit core timer

48 general-purpose I/Os (GPIOs), 8 with high current drivers

On-chip PLL capable of frequency multiplication

Debug/JTAG interface

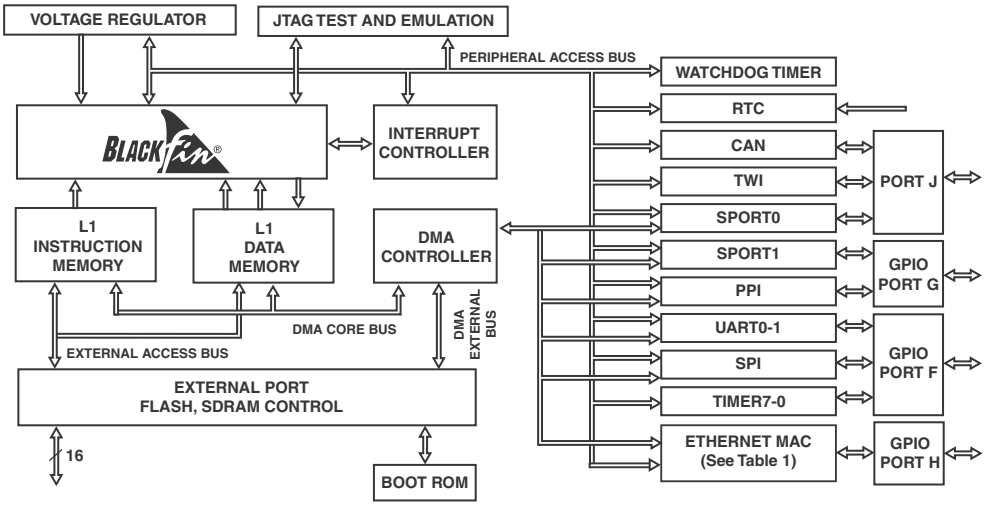

Figure 1. Functional Block Diagram

Blackfin and the Blackfin logo are registered trademarks of Analog Devices, Inc.

Rev. I

Information furnished by Analog Devices is believed to be accurate and reliable. However, no responsibility is assumed by Analog Devices for its use, nor for any infringements of patents or other rights of third parties that may result from its use. Specifications subject to change without notice. No license is granted by implication or otherwise under any patent or patent rights of Analog Devices. Trademarks and registered trademarks are the property of their respective owners.

One Technology Way, P.O. Box 9106, Norwood, MA 02062-9106 U.S.A.
Tel: 781.329.4700 **www.analog.com**
Fax: 781.461.3113 **©2010 Analog Devices, Inc. All rights reserved.**

TABLE OF CONTENTS

General Description ... 3
- Portable Low Power Architecture ... 3
- System Integration ... 3
- Blackfin Processor Peripherals ... 3
- Blackfin Processor Core ... 4
- Memory Architecture ... 5
- DMA Controllers ... 8
- Real-Time Clock ... 9
- Watchdog Timer ... 9
- Timers ... 9
- Serial Ports (SPORTs) ... 10
- Serial Peripheral Interface (SPI) Port ... 10
- UART Ports ... 10
- Controller Area Network (CAN) ... 11
- TWI Controller Interface ... 11
- 10/100 Ethernet MAC ... 11
- Ports ... 12
- Parallel Peripheral Interface (PPI) ... 12
- Dynamic Power Management ... 13
- Voltage Regulation ... 14
- Clock Signals ... 15
- Booting Modes ... 16
- Instruction Set Description ... 17
- Development Tools ... 17
- Designing an Emulator-Compatible Processor Board ... 18
- Related Documents ... 19
- Related Signal Chains ... 19

Pin Descriptions ... 20

Specifications ... 24
- Operating Conditions ... 24
- Electrical Characteristics ... 26
- Absolute Maximum Ratings ... 30
- ESD Sensitivity ... 30
- Package Information ... 30
- Timing Specifications ... 31
- Output Drive Currents ... 51
- Test Conditions ... 53
- Thermal Characteristics ... 57

182-Ball CSP_BGA Ball Assignment ... 58

208-Ball CSP_BGA Ball Assignment ... 61

Outline Dimensions ... 64
- Surface-Mount Design ... 66

Automotive Products ... 67

Ordering Guide ... 68

REVISION HISTORY

7/10—Rev. H to Rev. I

Corrected all document errata.

Replaced incorrect Figure 5, Voltage Regulator Circuit ... 14

Replaced incorrect Figure 13, External Port Bus Request and Grant Cycle Timing ... 34

To view product/process change notifications (PCNs) related to this data sheet revision, please visit the processor's product page on the www.analog.com website and use the View PCN link.

GENERAL DESCRIPTION

The ADSP-BF534/ADSP-BF536/ADSP-BF537 processors are members of the Blackfin® family of products, incorporating the Analog Devices, Inc./Intel Micro Signal Architecture (MSA). Blackfin processors combine a dual-MAC, state-of-the-art signal processing engine, the advantages of a clean, orthogonal RISC-like microprocessor instruction set, and single-instruction, multiple-data (SIMD) multimedia capabilities into a single instruction-set architecture.

The ADSP-BF534/ADSP-BF536/ADSP-BF537 processors are completely code and pin compatible. They differ only with respect to their performance, on-chip memory, and presence of the Ethernet MAC module. Specific performance, memory, and feature configurations are shown in Table 1.

Table 1. Processor Comparison

Features		ADSP-BF534	ADSP-BF536	ADSP-BF537
Ethernet MAC		—	1	1
CAN		1	1	1
TWI		1	1	1
SPORTs		2	2	2
UARTs		2	2	2
SPI		1	1	1
GP Timers		8	8	8
Watchdog Timers		1	1	1
RTC		1	1	1
Parallel Peripheral Interface		1	1	1
GPIOs		48	48	48
Memory Configuration	L1 Instruction SRAM/Cache	16K bytes	16K bytes	16K bytes
	L1 Instruction SRAM	48K bytes	48K bytes	48K bytes
	L1 Data SRAM/Cache	32K bytes	32K bytes	32K bytes
	L1 Data SRAM	32K bytes	—	32K bytes
	L1 Scratchpad	4K bytes	4K bytes	4K bytes
	L3 Boot ROM	2K bytes	2K bytes	2K bytes
Maximum Speed Grade		500 MHz	400 MHz	600 MHz
Package Options: CSP_BGA CSP_BGA		 208-Ball 182-Ball	 208-Ball 182-Ball	 208-Ball 182-Ball

By integrating a rich set of industry-leading system peripherals and memory, the Blackfin processors are the platform of choice for next-generation applications that require RISC-like programmability, multimedia support, and leading-edge signal processing in one integrated package.

PORTABLE LOW POWER ARCHITECTURE

Blackfin processors provide world-class power management and performance. They are produced with a low power and low voltage design methodology and feature on-chip dynamic power management, which is the ability to vary both the voltage and frequency of operation to significantly lower overall power consumption. This capability can result in a substantial reduction in power consumption, compared with just varying the frequency of operation. This allows longer battery life for portable appliances.

SYSTEM INTEGRATION

The Blackfin processor is a highly integrated system-on-a-chip solution for the next generation of embedded network-connected applications. By combining industry-standard interfaces with a high performance signal processing core, cost-effective applications can be developed quickly, without the need for costly external components. The system peripherals include an IEEE-compliant 802.3 10/100 Ethernet MAC (ADSP-BF536 and ADSP-BF537 only), a CAN 2.0B controller, a TWI controller, two UART ports, an SPI port, two serial ports (SPORTs), nine general-purpose 32-bit timers (eight with PWM capability), a real-time clock, a watchdog timer, and a parallel peripheral interface (PPI).

BLACKFIN PROCESSOR PERIPHERALS

The ADSP-BF534/ADSP-BF536/ADSP-BF537 processors contain a rich set of peripherals connected to the core via several high bandwidth buses, providing flexibility in system configuration as well as excellent overall system performance (see Figure 1). The processors contain dedicated network communication modules and high speed serial and parallel ports, an interrupt controller for flexible management of interrupts from the on-chip peripherals or external sources, and power management control functions to tailor the performance and power characteristics of the processor and system to many application scenarios.

All of the peripherals, except for the general-purpose I/O, CAN, TWI, real-time clock, and timers, are supported by a flexible DMA structure. There are also separate memory DMA channels dedicated to data transfers between the processor's various memory spaces, including external SDRAM and asynchronous memory. Multiple on-chip buses running at up to 133 MHz provide enough bandwidth to keep the processor core running along with activity on all of the on-chip and external peripherals.

The Blackfin processors include an on-chip voltage regulator in support of the processors' dynamic power management capability. The voltage regulator provides a range of core voltage levels when supplied from V_{DDEXT}. The voltage regulator can be bypassed at the user's discretion.

BLACKFIN PROCESSOR CORE

As shown in Figure 2, the Blackfin processor core contains two 16-bit multipliers, two 40-bit accumulators, two 40-bit ALUs, four video ALUs, and a 40-bit shifter. The computation units process 8-, 16-, or 32-bit data from the register file.

The compute register file contains eight 32-bit registers. When performing compute operations on 16-bit operand data, the register file operates as 16 independent 16-bit registers. All operands for compute operations come from the multiported register file and instruction constant fields.

Each MAC can perform a 16-bit by 16-bit multiply in each cycle, accumulating the results into the 40-bit accumulators. Signed and unsigned formats, rounding, and saturation are supported.

The ALUs perform a traditional set of arithmetic and logical operations on 16-bit or 32-bit data. In addition, many special instructions are included to accelerate various signal processing tasks. These include bit operations such as field extract and population count, modulo 2^{32} multiply, divide primitives, saturation and rounding, and sign/exponent detection. The set of video instructions include byte alignment and packing operations, 16-bit and 8-bit adds with clipping, 8-bit average operations, and 8-bit subtract/absolute value/accumulate (SAA) operations. Also provided are the compare/select and vector search instructions.

For certain instructions, two 16-bit ALU operations can be performed simultaneously on register pairs (a 16-bit high half and 16-bit low half of a compute register). If the second ALU is used, quad 16-bit operations are possible.

The 40-bit shifter can perform shifts and rotates, and is used to support normalization, field extract, and field deposit instructions.

The program sequencer controls the flow of instruction execution, including instruction alignment and decoding. For program flow control, the sequencer supports PC relative and indirect conditional jumps (with static branch prediction), and subroutine calls. Hardware is provided to support zero-overhead looping. The architecture is fully interlocked, meaning that the programmer need not manage the pipeline when executing instructions with data dependencies.

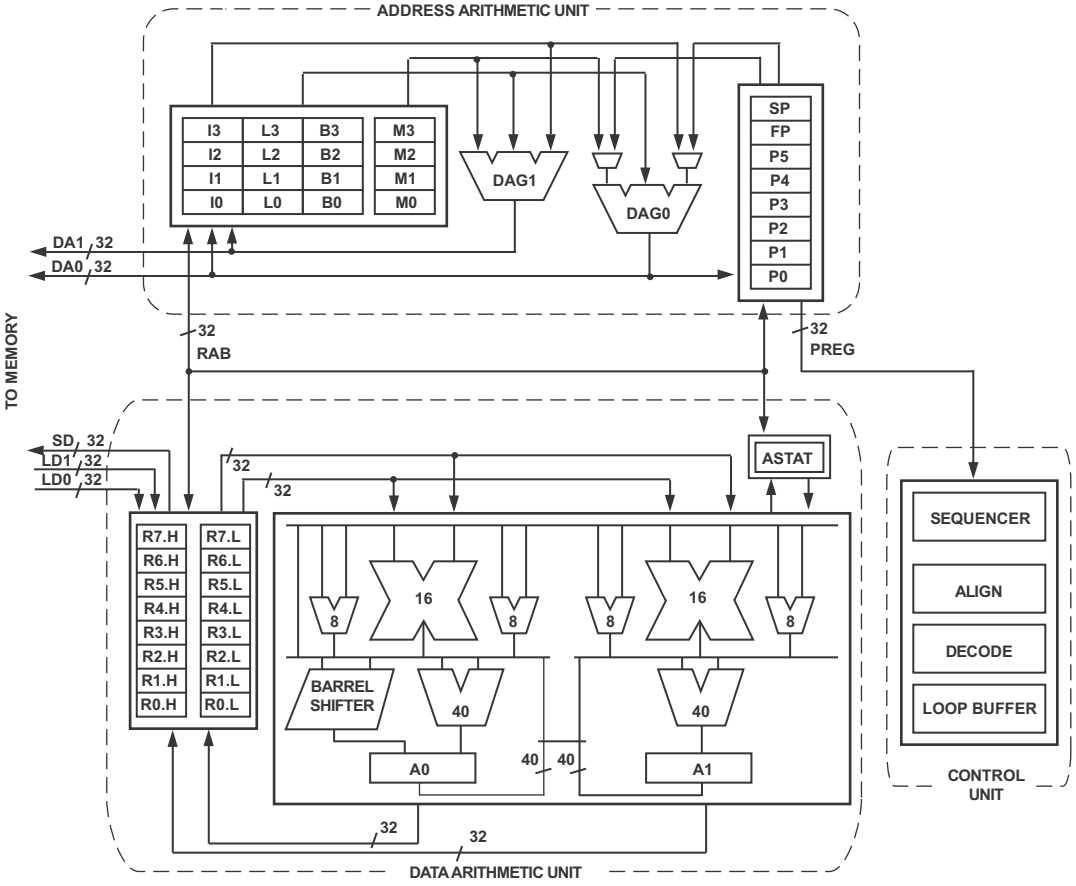

Figure 2. Blackfin Processor Core

The address arithmetic unit provides two addresses for simultaneous dual fetches from memory. It contains a multiported register file consisting of four sets of 32-bit index, modify, length, and base registers (for circular buffering), and eight additional 32-bit pointer registers (for C-style indexed stack manipulation).

Blackfin processors support a modified Harvard architecture in combination with a hierarchical memory structure. Level 1 (L1) memories are those that typically operate at the full processor speed with little or no latency. At the L1 level, the instruction memory holds instructions only. The two data memories hold data, and a dedicated scratchpad data memory stores stack and local variable information.

In addition, multiple L1 memory blocks are provided, offering a configurable mix of SRAM and cache. The memory management unit (MMU) provides memory protection for individual tasks that may be operating on the core and can protect system registers from unintended access.

The architecture provides three modes of operation: user mode, supervisor mode, and emulation mode. User mode has restricted access to certain system resources, thus providing a protected software environment, while supervisor mode has unrestricted access to the system and core resources.

The Blackfin processor instruction set has been optimized so that 16-bit opcodes represent the most frequently used instructions, resulting in excellent compiled code density. Complex DSP instructions are encoded into 32-bit opcodes, representing fully featured multifunction instructions. Blackfin processors support a limited multi-issue capability, where a 32-bit instruction can be issued in parallel with two 16-bit instructions, allowing the programmer to use many of the core resources in a single instruction cycle.

The Blackfin processor assembly language uses an algebraic syntax for ease of coding and readability. The architecture has been optimized for use in conjunction with the C/C++ compiler, resulting in fast and efficient software implementations.

MEMORY ARCHITECTURE

The ADSP-BF534/ADSP-BF536/ADSP-BF537 processors view memory as a single unified 4G byte address space, using 32-bit addresses. All resources, including internal memory, external memory, and I/O control registers, occupy separate sections of this common address space. The memory portions of this address space are arranged in a hierarchical structure to provide a good cost/performance balance of some very fast, low latency on-chip memory as cache or SRAM, and larger, lower cost, and performance off-chip memory systems. (See Figure 3).

The on-chip L1 memory system is the highest performance memory available to the Blackfin processor. The off-chip memory system, accessed through the external bus interface unit (EBIU), provides expansion with SDRAM, flash memory, and SRAM, optionally accessing up to 516M bytes of physical memory.

The memory DMA controller provides high bandwidth data-movement capability. It can perform block transfers of code or data between the internal memory and the external memory spaces.

Internal (On-Chip) Memory

The ADSP-BF534/ADSP-BF536/ADSP-BF537 processors have three blocks of on-chip memory providing high-bandwidth access to the core.

The first block is the L1 instruction memory, consisting of 64K bytes SRAM, of which 16K bytes can be configured as a four-way set-associative cache. This memory is accessed at full processor speed.

The second on-chip memory block is the L1 data memory, consisting of up to two banks of up to 32K bytes each. Each memory bank is configurable, offering both cache and SRAM functionality. This memory block is accessed at full processor speed.

The third memory block is a 4K byte scratchpad SRAM, which runs at the same speed as the L1 memories, but is only accessible as data SRAM, and cannot be configured as cache memory.

External (Off-Chip) Memory

External memory is accessed via the EBIU. This 16-bit interface provides a glueless connection to a bank of synchronous DRAM (SDRAM) as well as up to four banks of asynchronous memory devices including flash, EPROM, ROM, SRAM, and memory mapped I/O devices.

The PC133-compliant SDRAM controller can be programmed to interface to up to 128M bytes of SDRAM. A separate row can be open for each SDRAM internal bank, and the SDRAM controller supports up to 4 internal SDRAM banks, improving overall performance.

The asynchronous memory controller can be programmed to control up to four banks of devices with very flexible timing parameters for a wide variety of devices. Each bank occupies a 1M byte segment regardless of the size of the devices used, so that these banks are only contiguous if each is fully populated with 1M byte of memory.

I/O Memory Space

The ADSP-BF534/ADSP-BF536/ADSP-BF537 processors do not define a separate I/O space. All resources are mapped through the flat 32-bit address space. On-chip I/O devices have their control registers mapped into memory-mapped registers (MMRs) at addresses near the top of the 4G byte address space. These are separated into two smaller blocks, one which contains the control MMRs for all core functions, and the other which contains the registers needed for setup and control of the on-chip peripherals outside of the core. The MMRs are accessible only in supervisor mode and appear as reserved space to on-chip peripherals.

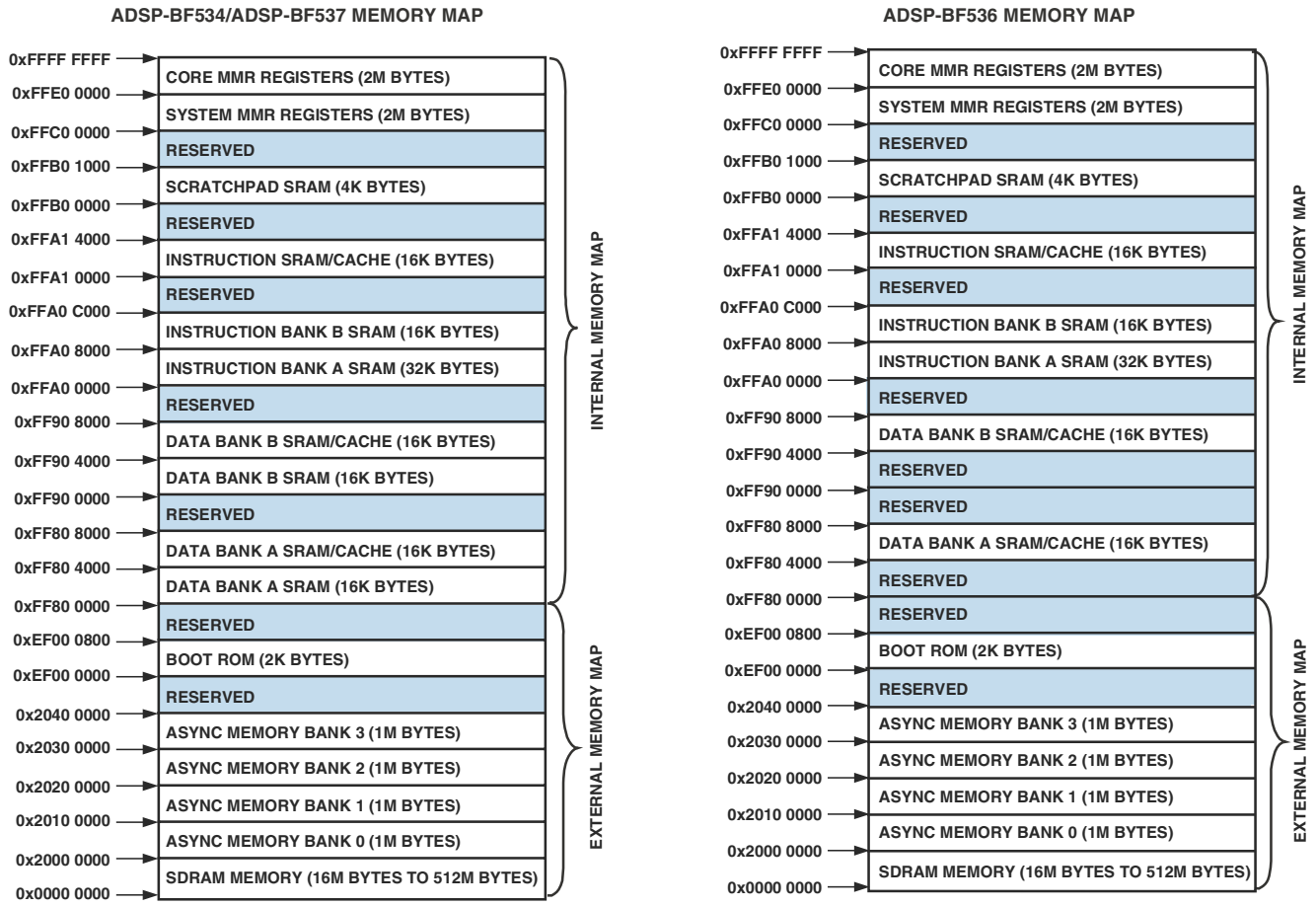

Figure 3. ADSP-BF534/ADSP-BF536/ADSP-BF537 Memory Maps

Booting

The Blackfin processor contains a small on-chip boot kernel, which configures the appropriate peripheral for booting. If the Blackfin processor is configured to boot from boot ROM memory space, the processor starts executing from the on-chip boot ROM. For more information, see Booting Modes on Page 16.

Event Handling

The event controller on the Blackfin processor handles all asynchronous and synchronous events to the processor. The Blackfin processor provides event handling that supports both nesting and prioritization. Nesting allows multiple event service routines to be active simultaneously. Prioritization ensures that servicing of a higher priority event takes precedence over servicing of a lower priority event. The controller provides support for five different types of events:

- Emulation – An emulation event causes the processor to enter emulation mode, allowing command and control of the processor via the JTAG interface.
- Reset – This event resets the processor.
- Nonmaskable Interrupt (NMI) – The NMI event can be generated by the software watchdog timer or by the $\overline{\text{NMI}}$ input signal to the processor. The NMI event is frequently used as a power-down indicator to initiate an orderly shutdown of the system.
- Exceptions – Events that occur synchronously to program flow (in other words, the exception is taken before the instruction is allowed to complete). Conditions such as data alignment violations and undefined instructions cause exceptions.
- Interrupts – Events that occur asynchronously to program flow. They are caused by input pins, timers, and other peripherals, as well as by an explicit software instruction.

Each event type has an associated register to hold the return address and an associated return-from-event instruction. When an event is triggered, the state of the processor is saved on the supervisor stack.

The Blackfin processor event controller consists of two stages: the core event controller (CEC) and the system interrupt controller (SIC). The core event controller works with the system interrupt controller to prioritize and control all system events.

Conceptually, interrupts from the peripherals enter into the SIC, and are then routed directly into the general-purpose interrupts of the CEC.

Core Event Controller (CEC)

The CEC supports nine general-purpose interrupts (IVG15–7), in addition to the dedicated interrupt and exception events. Of these general-purpose interrupts, the two lowest priority interrupts (IVG15–14) are recommended to be reserved for software interrupt handlers, leaving seven prioritized interrupt inputs to support the peripherals of the Blackfin processor. Table 2 describes the inputs to the CEC, identifies their names in the event vector table (EVT), and lists their priorities.

Table 2. Core Event Controller (CEC)

Priority (0 Is Highest)	Event Class	EVT Entry
0	Emulation/Test Control	EMU
1	Reset	RST
2	Nonmaskable Interrupt	NMI
3	Exception	EVX
4	Reserved	—
5	Hardware Error	IVHW
6	Core Timer	IVTMR
7	General-Purpose Interrupt 7	IVG7
8	General-Purpose Interrupt 8	IVG8
9	General-Purpose Interrupt 9	IVG9
10	General-Purpose Interrupt 10	IVG10
11	General-Purpose Interrupt 11	IVG11
12	General-Purpose Interrupt 12	IVG12
13	General-Purpose Interrupt 13	IVG13
14	General-Purpose Interrupt 14	IVG14
15	General-Purpose Interrupt 15	IVG15

System Interrupt Controller (SIC)

The system interrupt controller provides the mapping and routing of events from the many peripheral interrupt sources to the prioritized general-purpose interrupt inputs of the CEC. Although the processor provides a default mapping, the user can alter the mappings and priorities of interrupt events by writing the appropriate values into the interrupt assignment registers (IAR). Table 3 describes the inputs into the SIC and the default mappings into the CEC.

Table 3. System Interrupt Controller (SIC)

Peripheral Interrupt Event	Default Mapping	Peripheral Interrupt ID
PLL Wakeup	IVG7	0
DMA Error (Generic)	IVG7	1
DMAR0 Block Interrupt	IVG7	1
DMAR1 Block Interrupt	IVG7	1
DMAR0 Overflow Error	IVG7	1
DMAR1 Overflow Error	IVG7	1
CAN Error	IVG7	2
Ethernet Error (ADSP-BF536 and ADSP-BF537 only)	IVG7	2
SPORT 0 Error	IVG7	2
SPORT 1 Error	IVG7	2
PPI Error	IVG7	2
SPI Error	IVG7	2
UART0 Error	IVG7	2
UART1 Error	IVG7	2
Real-Time Clock	IVG8	3
DMA Channel 0 (PPI)	IVG8	4
DMA Channel 3 (SPORT 0 Rx)	IVG9	5
DMA Channel 4 (SPORT 0 Tx)	IVG9	6
DMA Channel 5 (SPORT 1 Rx)	IVG9	7
DMA Channel 6 (SPORT 1 Tx)	IVG9	8
TWI	IVG10	9
DMA Channel 7 (SPI)	IVG10	10
DMA Channel 8 (UART0 Rx)	IVG10	11
DMA Channel 9 (UART0 Tx)	IVG10	12
DMA Channel 10 (UART1 Rx)	IVG10	13
DMA Channel 11 (UART1 Tx)	IVG10	14
CAN Rx	IVG11	15
CAN Tx	IVG11	16
DMA Channel 1 (Ethernet Rx, ADSP-BF536 and ADSP-BF537 only)	IVG11	17
Port H Interrupt A	IVG11	17
DMA Channel 2 (Ethernet Tx, ADSP-BF536 and ADSP-BF537 only)	IVG11	18
Port H Interrupt B	IVG11	18
Timer 0	IVG12	19
Timer 1	IVG12	20
Timer 2	IVG12	21
Timer 3	IVG12	22
Timer 4	IVG12	23
Timer 5	IVG12	24
Timer 6	IVG12	25
Timer 7	IVG12	26
Port F, G Interrupt A	IVG12	27
Port G Interrupt B	IVG12	28

Table 3. System Interrupt Controller (SIC) (Continued)

Peripheral Interrupt Event	Default Mapping	Peripheral Interrupt ID
DMA Channels 12 and 13 (Memory DMA Stream 0)	IVG13	29
DMA Channels 14 and 15 (Memory DMA Stream 1)	IVG13	30
Software Watchdog Timer	IVG13	31
Port F Interrupt B	IVG13	31

Event Control

The Blackfin processor provides a very flexible mechanism to control the processing of events. In the CEC, three registers are used to coordinate and control events. Each register is 32 bits wide:

- CEC interrupt latch register (ILAT) – Indicates when events have been latched. The appropriate bit is set when the processor has latched the event and cleared when the event has been accepted into the system. This register is updated automatically by the controller, but it can be written only when its corresponding IMASK bit is cleared.
- CEC interrupt mask register (IMASK) – Controls the masking and unmasking of individual events. When a bit is set in the IMASK register, that event is unmasked and is processed by the CEC when asserted. A cleared bit in the IMASK register masks the event, preventing the processor from servicing the event even though the event may be latched in the ILAT register. This register can be read or written while in supervisor mode. (Note that general-purpose interrupts can be globally enabled and disabled with the STI and CLI instructions, respectively.)
- CEC interrupt pending register (IPEND) – The IPEND register keeps track of all nested events. A set bit in the IPEND register indicates the event is currently active or nested at some level. This register is updated automatically by the controller but can be read while in supervisor mode.

The SIC allows further control of event processing by providing three 32-bit interrupt control and status registers. Each register contains a bit corresponding to each of the peripheral interrupt events shown in Table 3 on Page 7.

- SIC interrupt mask register (SIC_IMASK) – Controls the masking and unmasking of each peripheral interrupt event. When a bit is set in the register, that peripheral event is unmasked and is processed by the system when asserted. A cleared bit in the register masks the peripheral event, preventing the processor from servicing the event.
- SIC interrupt status register (SIC_ISR) – As multiple peripherals can be mapped to a single event, this register allows the software to determine which peripheral event source triggered the interrupt. A set bit indicates the peripheral is asserting the interrupt, and a cleared bit indicates the peripheral is not asserting the event.
- SIC interrupt wake-up enable register (SIC_IWR) – By enabling the corresponding bit in this register, a peripheral can be configured to wake up the processor, should the core be idled when the event is generated. (For more information, see Dynamic Power Management on Page 13.)

Because multiple interrupt sources can map to a single general-purpose interrupt, multiple pulse assertions can occur simultaneously, before or during interrupt processing for an interrupt event already detected on this interrupt input. The IPEND register contents are monitored by the SIC as the interrupt acknowledgement.

The appropriate ILAT register bit is set when an interrupt rising edge is detected (detection requires two core clock cycles). The bit is cleared when the respective IPEND register bit is set. The IPEND bit indicates that the event has entered into the processor pipeline. At this point the CEC recognizes and queues the next rising edge event on the corresponding event input. The minimum latency from the rising edge transition of the general-purpose interrupt to the IPEND output asserted is three core clock cycles; however, the latency can be much higher, depending on the activity within and the state of the processor.

DMA CONTROLLERS

The Blackfin processors have multiple, independent DMA channels that support automated data transfers with minimal overhead for the processor core. DMA transfers can occur between the processor's internal memories and any of its DMA-capable peripherals. Additionally, DMA transfers can be accomplished between any of the DMA-capable peripherals and external devices connected to the external memory interfaces, including the SDRAM controller and the asynchronous memory controller. DMA-capable peripherals include the Ethernet MAC (ADSP-BF536 and ADSP-BF537 only), SPORTs, SPI port, UARTs, and PPI. Each individual DMA-capable peripheral has at least one dedicated DMA channel.

The DMA controller supports both one-dimensional (1-D) and two-dimensional (2-D) DMA transfers. DMA transfer initialization can be implemented from registers or from sets of parameters called descriptor blocks.

The 2-D DMA capability supports arbitrary row and column sizes up to 64K elements by 64K elements, and arbitrary row and column step sizes up to ±32K elements. Furthermore, the column step size can be less than the row step size, allowing implementation of interleaved data streams. This feature is especially useful in video applications where data can be de-interleaved on the fly.

Examples of DMA types supported by the DMA controller include

- A single, linear buffer that stops upon completion
- A circular, auto-refreshing buffer that interrupts on each full or fractionally full buffer
- 1-D or 2-D DMA using a linked list of descriptors
- 2-D DMA using an array of descriptors, specifying only the base DMA address within a common page.

In addition to the dedicated peripheral DMA channels, there are two memory DMA channels provided for transfers between the various memories of the processor system. This enables transfers of blocks of data between any of the memories—including external SDRAM, ROM, SRAM, and flash memory—with minimal processor intervention. Memory DMA transfers can be controlled by a very flexible descriptor-based methodology or by a standard register-based autobuffer mechanism.

The ADSP-BF534/ADSP-BF536/ADSP-BF537 processors also have an external DMA controller capability via dual external DMA request pins when used in conjunction with the external bus interface unit (EBIU). This functionality can be used when a high speed interface is required for external FIFOs and high bandwidth communications peripherals such as USB 2.0. It allows control of the number of data transfers for memDMA. The number of transfers per edge is programmable. This feature can be programmed to allow memDMA to have an increased priority on the external bus relative to the core.

REAL-TIME CLOCK

The real-time clock (RTC) provides a robust set of digital watch features, including current time, stopwatch, and alarm. The RTC is clocked by a 32.768 kHz crystal external to the processor. The RTC peripheral has dedicated power supply pins so that it can remain powered up and clocked even when the rest of the processor is in a low power state. The RTC provides several programmable interrupt options, including interrupt per second, minute, hour, or day clock ticks, interrupt on programmable stopwatch countdown, or interrupt at a programmed alarm time.

The 32.768 kHz input clock frequency is divided down to a 1 Hz signal by a prescaler. The counter function of the timer consists of four counters: a 60-second counter, a 60-minute counter, a 24-hour counter, and an 32,768-day counter.

When enabled, the alarm function generates an interrupt when the output of the timer matches the programmed value in the alarm control register. There are two alarms: The first alarm is for a time of day, while the second alarm is for a day and time of that day.

The stopwatch function counts down from a programmed value, with one-second resolution. When the stopwatch is enabled and the counter underflows, an interrupt is generated.

Like the other peripherals, the RTC can wake up the processor from sleep mode upon generation of any RTC wake-up event. Additionally, an RTC wake-up event can wake up the processor from deep sleep mode, and wake up the on-chip internal voltage regulator from the hibernate operating mode.

Connect RTC pins RTXI and RTXO with external components as shown in Figure 4.

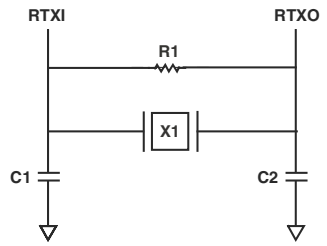

SUGGESTED COMPONENTS:
X1 = ECLIPTEK EC38J (THROUGH-HOLE PACKAGE) OR
EPSON MC405 12 pF LOAD (SURFACE-MOUNT PACKAGE)
C1 = 22 pF
C2 = 22 pF
R1 = 10 MΩ

NOTE: C1 AND C2 ARE SPECIFIC TO CRYSTAL SPECIFIED FOR X1. CONTACT CRYSTAL MANUFACTURER FOR DETAILS. C1 AND C2 SPECIFICATIONS ASSUME BOARD TRACE CAPACITANCE OF 3 pF.

Figure 4. External Components for RTC

WATCHDOG TIMER

The ADSP-BF534/ADSP-BF536/ADSP-BF537 processors include a 32-bit timer that can be used to implement a software watchdog function. A software watchdog can improve system availability by forcing the processor to a known state through generation of a system reset, nonmaskable interrupt (NMI), or general-purpose interrupt, if the timer expires before being reset by software. The programmer initializes the count value of the timer, enables the appropriate interrupt, then enables the timer. Thereafter, the software must reload the counter before it counts to zero from the programmed value. This protects the system from remaining in an unknown state where software, which would normally reset the timer, has stopped running due to an external noise condition or software error.

If configured to generate a hardware reset, the watchdog timer resets both the core and the processor peripherals. After a reset, software can determine if the watchdog was the source of the hardware reset by interrogating a status bit in the watchdog timer control register.

The timer is clocked by the system clock (SCLK), at a maximum frequency of f_{SCLK}.

TIMERS

There are nine general-purpose programmable timer units in the processor. Eight timers have an external pin that can be configured either as a pulse-width modulator (PWM) or timer output, as an input to clock the timer, or as a mechanism for measuring pulse widths and periods of external events. These timers can be synchronized to an external clock input to the several other associated PF pins, to an external clock input to the PPI_CLK input pin, or to the internal SCLK.

The timer units can be used in conjunction with the two UARTs and the CAN controller to measure the width of the pulses in the data stream to provide a software auto-baud detect function for the respective serial channels.

The timers can generate interrupts to the processor core providing periodic events for synchronization, either to the system clock or to a count of external signals.

In addition to the eight general-purpose programmable timers, a ninth timer is also provided. This extra timer is clocked by the internal processor clock and is typically used as a system tick clock for generating periodic interrupts in an operating system.

SERIAL PORTS (SPORTs)

The ADSP-BF534/ADSP-BF536/ADSP-BF537 processors incorporate two dual-channel synchronous serial ports (SPORT0 and SPORT1) for serial and multiprocessor communications. The SPORTs support the following features:

- I^2S capable operation.
- Bidirectional operation – Each SPORT has two sets of independent transmit and receive pins, enabling eight channels of I^2S stereo audio.
- Buffered (8-deep) transmit and receive ports – Each port has a data register for transferring data words to and from other processor components and shift registers for shifting data in and out of the data registers.
- Clocking – Each transmit and receive port can either use an external serial clock or generate its own, in frequencies ranging from (f_{SCLK}/131,070) Hz to (f_{SCLK}/2) Hz.
- Word length – Each SPORT supports serial data words from 3 bits to 32 bits in length, transferred most significant bit first or least significant bit first.
- Framing – Each transmit and receive port can run with or without frame sync signals for each data word. Frame sync signals can be generated internally or externally, active high or low, and with either of two pulse widths and early or late frame sync.
- Companding in hardware – Each SPORT can perform A-law or μ-law companding according to ITU recommendation G.711. Companding can be selected on the transmit and/or receive channel of the SPORT without additional latencies.
- DMA operations with single-cycle overhead – Each SPORT can automatically receive and transmit multiple buffers of memory data. The processor can link or chain sequences of DMA transfers between a SPORT and memory.
- Interrupts – Each transmit and receive port generates an interrupt upon completing the transfer of a data word or after transferring an entire data buffer, or buffers, through DMA.
- Multichannel capability – Each SPORT supports 128 channels out of a 1024-channel window and is compatible with the H.100, H.110, MVIP-90, and HMVIP standards.

SERIAL PERIPHERAL INTERFACE (SPI) PORT

The ADSP-BF534/ADSP-BF536/ADSP-BF537 processors have an SPI-compatible port that enables the processor to communicate with multiple SPI-compatible devices.

The SPI interface uses three pins for transferring data: two data pins (Master Output-Slave Input, MOSI, and Master Input-Slave Output, MISO) and a clock pin (serial clock, SCK). An SPI chip select input pin ($\overline{\text{SPISS}}$) lets other SPI devices select the processor, and seven SPI chip select output pins ($\overline{\text{SPISEL7–1}}$) let the processor select other SPI devices. The SPI select pins are reconfigured programmable flag pins. Using these pins, the SPI port provides a full-duplex, synchronous serial interface, which supports both master/slave modes and multimaster environments.

The SPI port's baud rate and clock phase/polarities are programmable, and it has an integrated DMA controller, configurable to support transmit or receive data streams. The SPI's DMA controller can only service unidirectional accesses at any given time.

The SPI port's clock rate is calculated as:

$$SPI\ Clock\ Rate = \frac{f_{SCLK}}{2 \times SPI_BAUD}$$

where the 16-bit SPI_BAUD register contains a value of 2 to 65,535.

During transfers, the SPI port simultaneously transmits and receives by serially shifting data in and out on its two serial data lines. The serial clock line synchronizes the shifting and sampling of data on the two serial data lines.

UART PORTS

The ADSP-BF534/ADSP-BF536/ADSP-BF537 processors provide two full-duplex universal asynchronous receiver and transmitter (UART) ports, which are fully compatible with PC-standard UARTs. Each UART port provides a simplified UART interface to other peripherals or hosts, supporting full-duplex, DMA-supported, asynchronous transfers of serial data. A UART port includes support for five to eight data bits, one or two stop bits, and none, even, or odd parity. Each UART port supports two modes of operation:

- PIO (programmed I/O) – The processor sends or receives data by writing or reading I/O mapped UART registers. The data is double-buffered on both transmit and receive.
- DMA (direct memory access) – The DMA controller transfers both transmit and receive data. This reduces the number and frequency of interrupts required to transfer data to and from memory. The UART has two dedicated DMA channels, one for transmit and one for receive. These DMA channels have lower default priority than most DMA channels because of their relatively low service rates.

Each UART port's baud rate, serial data format, error code generation and status, and interrupts are programmable:

- Supporting bit rates ranging from (f_{SCLK}/1,048,576) to (f_{SCLK}/16) bits per second.
- Supporting data formats from 7 bits to 12 bits per frame.
- Both transmit and receive operations can be configured to generate maskable interrupts to the processor.

The UART port's clock rate is calculated as:

$$UART\ Clock\ Rate = \frac{f_{SCLK}}{16 \times UARTx_Divisor}$$

where the 16-bit *UARTx_Divisor* comes from the UARTx_DLH register (most significant 8 bits) and UARTx_DLL register (least significant 8 bits).

In conjunction with the general-purpose timer functions, autobaud detection is supported.

The capabilities of the UARTs are further extended with support for the infrared data association (IrDA®) serial infrared physical layer link specification (SIR) protocol.

CONTROLLER AREA NETWORK (CAN)

The ADSP-BF534/ADSP-BF536/ADSP-BF537 processors offer a CAN controller that is a communication controller implementing the CAN 2.0B (active) protocol. This protocol is an asynchronous communications protocol used in both industrial and automotive control systems. The CAN protocol is well-suited for control applications due to its capability to communicate reliably over a network, since the protocol incorporates CRC checking message error tracking, and fault node confinement.

The CAN controller offers the following features:

- 32 mailboxes (eight receive only, eight transmit only, 16 configurable for receive or transmit).
- Dedicated acceptance masks for each mailbox.
- Additional data filtering on first two bytes.
- Support for both the standard (11-bit) and extended (29-bit) identifier (ID) message formats.
- Support for remote frames.
- Active or passive network support.
- CAN wake-up from hibernation mode (lowest static power consumption mode).
- Interrupts, including: Tx complete, Rx complete, error, global.

The electrical characteristics of each network connection are very demanding so the CAN interface is typically divided into two parts: a controller and a transceiver. This allows a single controller to support different drivers and CAN networks. The CAN module represents only the controller part of the interface. The controller interface supports connection to 3.3 V high-speed, fault-tolerant, single-wire transceivers.

TWI CONTROLLER INTERFACE

The ADSP-BF534/ADSP-BF536/ADSP-BF537 processors include a 2-wire interface (TWI) module for providing a simple exchange method of control data between multiple devices. The TWI is compatible with the widely used I^2C® bus standard. The TWI module offers the capabilities of simultaneous master and slave operation, support for both 7-bit addressing and multimedia data arbitration. The TWI interface utilizes two pins for transferring clock (SCL) and data (SDA) and supports the protocol at speeds up to 400 kbps. The TWI interface pins are compatible with 5 V logic levels.

Additionally, the processor's TWI module is fully compatible with serial camera control bus (SCCB) functionality for easier control of various CMOS camera sensor devices.

10/100 ETHERNET MAC

The ADSP-BF536 and ADSP-BF537 processors offer the capability to directly connect to a network by way of an embedded fast Ethernet Media Access Controller (MAC) that supports both 10-BaseT (10 Mbps) and 100-BaseT (100 Mbps) operation. The 10/100 Ethernet MAC peripheral is fully compliant to the IEEE 802.3-2002 standard, and it provides programmable features designed to minimize supervision, bus use, or message processing by the rest of the processor system.

Some standard features are

- Support of MII and RMII protocols for external PHYs.
- Full duplex and half duplex modes.
- Data framing and encapsulation: generation and detection of preamble, length padding, and FCS.
- Media access management (in half-duplex operation): collision and contention handling, including control of retransmission of collision frames and of back-off timing.
- Flow control (in full-duplex operation): generation and detection of PAUSE frames.
- Station management: generation of MDC/MDIO frames for read-write access to PHY registers.
- SCLK operating range down to 25 MHz (active and sleep operating modes).
- Internal loopback from Tx to Rx.

Some advanced features are

- Buffered crystal output to external PHY for support of a single crystal system.
- Automatic checksum computation of IP header and IP payload fields of Rx frames.
- Independent 32-bit descriptor-driven Rx and Tx DMA channels.
- Frame status delivery to memory via DMA, including frame completion semaphores, for efficient buffer queue management in software.
- Tx DMA support for separate descriptors for MAC header and payload to eliminate buffer copy operations.
- Convenient frame alignment modes support even 32-bit alignment of encapsulated Rx or Tx IP packet data in memory after the 14-byte MAC header.
- Programmable Ethernet event interrupt supports any combination of
    - Any selected Rx or Tx frame status conditions.
    - PHY interrupt condition.
    - Wake-up frame detected.
    - Any selected MAC management counter(s) at half-full.
    - DMA descriptor error.
- 47 MAC management statistics counters with selectable clear-on-read behavior and programmable interrupts on half maximum value.

- Programmable Rx address filters, including a 64-bit address hash table for multicast and/or unicast frames, and programmable filter modes for broadcast, multicast, unicast, control, and damaged frames.
- Advanced power management supporting unattended transfer of Rx and Tx frames and status to/from external memory via DMA during low power sleep mode.
- System wake-up from sleep operating mode upon magic packet or any of four user-definable wake-up frame filters.
- Support for 802.3Q tagged VLAN frames.
- Programmable MDC clock rate and preamble suppression.
- In RMII operation, 7 unused pins can be configured as GPIO pins for other purposes.

PORTS

The ADSP-BF534/ADSP-BF536/ADSP-BF537 processors group the many peripheral signals to four ports—Port F, Port G, Port H, and Port J. Most of the associated pins are shared by multiple signals. The ports function as multiplexer controls. Eight of the pins (Port F7–0) offer high source/high sink current capabilities.

General-Purpose I/O (GPIO)

The processors have 48 bidirectional, general-purpose I/O (GPIO) pins allocated across three separate GPIO modules—PORTFIO, PORTGIO, and PORTHIO, associated with Port F, Port G, and Port H, respectively. Port J does not provide GPIO functionality. Each GPIO-capable pin shares functionality with other processor peripherals via a multiplexing scheme; however, the GPIO functionality is the default state of the device upon power-up. Neither GPIO output or input drivers are active by default. Each general-purpose port pin can be individually controlled by manipulation of the port control, status, and interrupt registers:

- GPIO direction control register – Specifies the direction of each individual GPIO pin as input or output.
- GPIO control and status registers – The processors employ a "write one to modify" mechanism that allows any combination of individual GPIO pins to be modified in a single instruction, without affecting the level of any other GPIO pins. Four control registers are provided. One register is written in order to set pin values, one register is written in order to clear pin values, one register is written in order to toggle pin values, and one register is written in order to specify a pin value. Reading the GPIO status register allows software to interrogate the sense of the pins.
- GPIO interrupt mask registers – The two GPIO interrupt mask registers allow each individual GPIO pin to function as an interrupt to the processor. Similar to the two GPIO control registers that are used to set and clear individual pin values, one GPIO interrupt mask register sets bits to enable interrupt function, and the other GPIO interrupt mask register clears bits to disable interrupt function. GPIO pins defined as inputs can be configured to generate hardware interrupts, while output pins can be triggered by software interrupts.
- GPIO interrupt sensitivity registers – The two GPIO interrupt sensitivity registers specify whether individual pins are level- or edge-sensitive and specify—if edge-sensitive—whether just the rising edge or both the rising and falling edges of the signal are significant. One register selects the type of sensitivity, and one register selects which edges are significant for edge-sensitivity.

PARALLEL PERIPHERAL INTERFACE (PPI)

The processor provides a parallel peripheral interface (PPI) that can connect directly to parallel ADC and DAC converters, video encoders and decoders, and other general-purpose peripherals. The PPI consists of a dedicated input clock pin, up to three frame synchronization pins, and up to 16 data pins. The input clock supports parallel data rates up to half the system clock rate and the synchronization signals can be configured as either inputs or outputs.

The PPI supports a variety of general-purpose and ITU-R 656 modes of operation. In general-purpose mode, the PPI provides half-duplex, bidirectional data transfer with up to 16 bits of data. Up to three frame synchronization signals are also provided. In ITU-R 656 mode, the PPI provides half-duplex bidirectional transfer of 8- or 10-bit video data. Additionally, on-chip decode of embedded start-of-line (SOL) and start-of-field (SOF) preamble packets is supported.

General-Purpose Mode Descriptions

The general-purpose modes of the PPI are intended to suit a wide variety of data capture and transmission applications. Three distinct submodes are supported:

1. Input mode – Frame syncs and data are inputs into the PPI.
2. Frame capture mode – Frame syncs are outputs from the PPI, but data are inputs.
3. Output mode – Frame syncs and data are outputs from the PPI.

Input Mode

Input mode is intended for ADC applications, as well as video communication with hardware signaling. In its simplest form, PPI_FS1 is an external frame sync input that controls when to read data. The PPI_DELAY MMR allows for a delay (in PPI_CLK cycles) between reception of this frame sync and the initiation of data reads. The number of input data samples is user programmable and defined by the contents of the PPI_COUNT register. The PPI supports 8-bit and 10-bit through 16-bit data, programmable in the PPI_CONTROL register.

Frame Capture Mode

Frame capture mode allows the video source(s) to act as a slave (for frame capture for example). The ADSP-BF534/ADSP-BF536/ADSP-BF537 processors control when to read from the video source(s). PPI_FS1 is an HSYNC output and PPI_FS2 is a VSYNC output.

Output Mode

Output mode is used for transmitting video or other data with up to three output frame syncs. Typically, a single frame sync is appropriate for data converter applications, whereas two or three frame syncs could be used for sending video with hardware signaling.

ITU-R 656 Mode Descriptions

The ITU-R 656 modes of the PPI are intended to suit a wide variety of video capture, processing, and transmission applications. Three distinct submodes are supported:

1. Active video only mode
2. Vertical blanking only mode
3. Entire field mode

Active Video Mode

Active video only mode is used when only the active video portion of a field is of interest and not any of the blanking intervals. The PPI does not read in any data between the end of active video (EAV) and start of active video (SAV) preamble symbols, or any data present during the vertical blanking intervals. In this mode, the control byte sequences are not stored to memory; they are filtered by the PPI. After synchronizing to the start of Field 1, the PPI ignores incoming samples until it sees an SAV code. The user specifies the number of active video lines per frame (in PPI_COUNT register).

Vertical Blanking Interval Mode

In this mode, the PPI only transfers vertical blanking interval (VBI) data.

Entire Field Mode

In this mode, the entire incoming bit stream is read in through the PPI. This includes active video, control preamble sequences, and ancillary data that may be embedded in horizontal and vertical blanking intervals. Data transfer starts immediately after synchronization to Field 1. Data is transferred to or from the synchronous channels through eight DMA engines that work autonomously from the processor core.

DYNAMIC POWER MANAGEMENT

The ADSP-BF534/ADSP-BF536/ADSP-BF537 processors provide five operating modes, each with a different performance and power profile. In addition, dynamic power management provides the control functions to dynamically alter the processor core supply voltage, further reducing power dissipation. Control of clocking to each of the peripherals also reduces power consumption. See Table 4 for a summary of the power settings for each mode. Also, see Table 16, Table 15 and Table 17.

Full-On Operating Mode—Maximum Performance

In the full-on mode, the PLL is enabled and is not bypassed, providing capability for maximum operational frequency. This is the power-up default execution state in which maximum performance can be achieved. The processor core and all enabled peripherals run at full speed.

Active Operating Mode—Moderate Dynamic Power Savings

In the active mode, the PLL is enabled but bypassed. Because the PLL is bypassed, the processor's core clock (CCLK) and system clock (SCLK) run at the input clock (CLKIN) frequency. In this mode, the CLKIN to CCLK multiplier ratio can be changed, although the changes are not realized until the full-on mode is entered. DMA access is available to appropriately configured L1 memories.

In the active mode, it is possible to disable the PLL through the PLL control register (PLL_CTL). If disabled, the PLL must be re-enabled before transitioning to the full-on or sleep modes.

Sleep Operating Mode—High Dynamic Power Savings

The sleep mode reduces dynamic power dissipation by disabling the clock to the processor core (CCLK). The PLL and system clock (SCLK), however, continue to operate in this mode. Typically an external event or RTC activity wakes up the processor. When in the sleep mode, asserting wake-up causes the processor to sense the value of the BYPASS bit in the PLL control register (PLL_CTL). If BYPASS is disabled, the processor transitions to the full on mode. If BYPASS is enabled, the processor transitions to the active mode.

System DMA access to L1 memory is not supported in sleep mode.

Table 4. Power Settings

Mode	PLL	PLL Bypassed	Core Clock (CCLK)	System Clock (SCLK)	Internal Power (V_{DDINT})
Full On	Enabled	No	Enabled	Enabled	On
Active	Enabled/ Disabled	Yes	Enabled	Enabled	On
Sleep	Enabled	—	Disabled	Enabled	On
Deep Sleep	Disabled	—	Disabled	Disabled	On
Hibernate	Disabled	—	Disabled	Disabled	Off

Deep Sleep Operating Mode—Maximum Dynamic Power Savings

The deep sleep mode maximizes dynamic power savings by disabling the clocks to the processor core (CCLK) and to all synchronous peripherals (SCLK). Asynchronous peripherals, such as the RTC, may still be running but cannot access internal resources or external memory. This powered-down mode can only be exited by assertion of the reset interrupt ($\overline{RESET}$) or by an asynchronous interrupt generated by the RTC. When in deep sleep mode, an RTC asynchronous interrupt causes the

processor to transition to the active mode. Assertion of $\overline{\text{RESET}}$ while in deep sleep mode causes the processor to transition to the full-on mode.

Hibernate State—Maximum Static Power Savings

The hibernate state maximizes static power savings by disabling the voltage and clocks to the processor core (CCLK) and to all of the synchronous peripherals (SCLK). The internal voltage regulator for the processor can be shut off by writing b#00 to the FREQ bits of the VR_CTL register. This disables both CCLK and SCLK. Furthermore, it sets the internal power supply voltage (V_{DDINT}) to 0 V to provide the greatest power savings. To preserve the processor state, prior to removing power, any critical information stored internally (memory contents, register contents, etc.) must be written to a nonvolatile storage device.

Since V_{DDEXT} is still supplied in this state, all of the external pins three-state, unless otherwise specified. This allows other devices that are connected to the processor to still have power applied without drawing unwanted current.

The Ethernet or CAN modules can wake up the internal supply regulator. If the PH6 pin does not connect as the $\overline{\text{PHYINT}}$ signal to an external PHY device, it can be pulled low by any other device to wake the processor up. The regulator can also be woken up by a real-time clock wake-up event or by asserting the $\overline{\text{RESET}}$ pin. All hibernate wake-up events initiate the hardware reset sequence. Individual sources are enabled by the VR_CTL register.

With the exception of the VR_CTL and the RTC registers, all internal registers and memories lose their content in the hibernate state. State variables can be held in external SRAM or SDRAM. The SCKELOW bit in the VR_CTL register provides a means of waking from hibernate state without disrupting a self-refreshing SDRAM, provided that there is also an external pull-down on the SCKE pin.

Power Savings

As shown in Table 5, the processors support three different power domains which maximizes flexibility, while maintaining compliance with industry standards and conventions. By isolating the internal logic of the processor into its own power domain, separate from the RTC and other I/O, the processor can take advantage of dynamic power management, without affecting the RTC or other I/O devices. There are no sequencing requirements for the various power domains.

Table 5. Power Domains

Power Domain	V_{DD} Range
All internal logic, except RTC	V_{DDINT}
RTC internal logic and crystal I/O	V_{DDRTC}
All other I/O	V_{DDEXT}

The dynamic power management feature allows both the processor's input voltage (V_{DDINT}) and clock frequency (f_{CCLK}) to be dynamically controlled.

The power dissipated by a processor is largely a function of its clock frequency and the square of the operating voltage. For example, reducing the clock frequency by 25% results in a 25% reduction in power dissipation, while reducing the voltage by 25% reduces power dissipation by more than 40%. Further, these power savings are additive, in that if the clock frequency and supply voltage are both reduced, the power savings can be dramatic, as shown in the following equations.

The power savings factor (PSF) is calculated as:

$$PSF = \frac{f_{CCLKRED}}{f_{CCLKNOM}} \times \left(\frac{V_{DDINTRED}}{V_{DDINTNOM}}\right)^2 \times \left(\frac{t_{RED}}{t_{NOM}}\right)$$

where:

$f_{CCLKNOM}$ is the nominal core clock frequency

$f_{CCLKRED}$ is the reduced core clock frequency

$V_{DDINTNOM}$ is the nominal internal supply voltage

$V_{DDINTRED}$ is the reduced internal supply voltage

t_{NOM} is the duration running at $f_{CCLKNOM}$

t_{RED} is the duration running at $f_{CCLKRED}$

The percent power savings is calculated as

$$\%\ power\ savings = (1 - PSF) \times 100\%$$

VOLTAGE REGULATION

The ADSP-BF534/ADSP-BF536/ADSP-BF537 processors provide an on-chip voltage regulator that can generate appropriate V_{DDINT} voltage levels from the V_{DDEXT} supply. See Operating Conditions on Page 24 for regulator tolerances and acceptable V_{DDEXT} ranges for specific models.

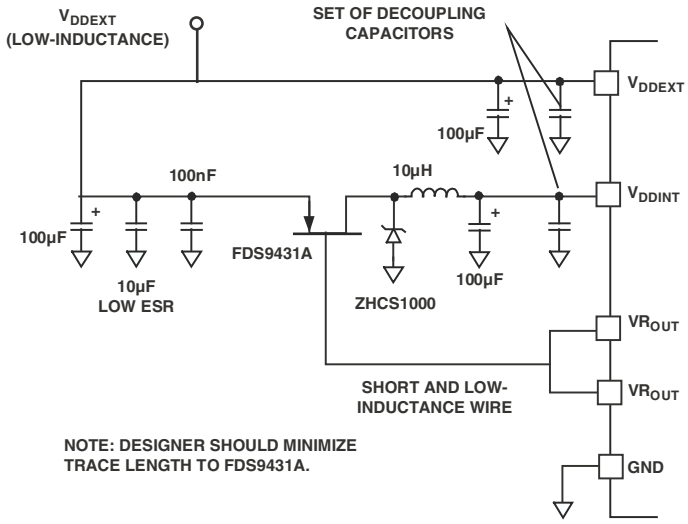

Figure 5. Voltage Regulator Circuit

Figure 5 shows the typical external components required to complete the power management system. The regulator controls the internal logic voltage levels and is programmable with the voltage regulator control register (VR_CTL) in increments of 50 mV. To reduce standby power consumption, the internal voltage regulator can be programmed to remove power to the processor core while keeping I/O power supplied. While in hibernate state, V_{DDEXT} can still be applied, eliminating the need for external buffers. The voltage regulator can be activated from this power-down state by asserting the $\overline{RESET}$ pin, which then initiates a boot sequence. The regulator can also be disabled and bypassed at the user's discretion. For additional information on voltage regulation, see *Switching Regulator Design Considerations for the ADSP-BF533 Blackfin Processors (EE-228)*.

CLOCK SIGNALS

The ADSP-BF534/ADSP-BF536/ADSP-BF537 processors can be clocked by an external crystal, a sine wave input, or a buffered, shaped clock derived from an external clock oscillator.

If an external clock is used, it should be a TTL compatible signal and must not be halted, changed, or operated below the specified frequency during normal operation. This signal is connected to the processor's CLKIN pin. When an external clock is used, the XTAL pin must be left unconnected.

Alternatively, because the processors include an on-chip oscillator circuit, an external crystal can be used. For fundamental frequency operation, use the circuit shown in Figure 6. A parallel-resonant, fundamental frequency, microprocessor-grade crystal is connected across the CLKIN and XTAL pins. The on-chip resistance between CLKIN and the XTAL pin is in the 500 kΩ range. Further parallel resistors are typically not recommended. The two capacitors and the series resistor shown in Figure 6 fine-tune phase and amplitude of the sine frequency.

The capacitor and resistor values shown in Figure 6 are typical values only. The capacitor values are dependent upon the crystal manufacturers' load capacitance recommendations and the PCB physical layout. The resistor value depends on the drive level specified by the crystal manufacturer. The user should verify the customized values based on careful investigations of multiple devices over temperature range.

A third-overtone crystal can be used for frequencies above 25 MHz. The circuit is then modified to ensure crystal operation only at the third overtone, by adding a tuned inductor circuit as shown in Figure 6. A design procedure for third-overtone operation is discussed in detail in the application note *Using Third Overtone Crystals with the ADSP-218x DSP (EE-168)*.

The CLKBUF pin is an output pin, and is a buffer version of the input clock. This pin is particularly useful in Ethernet applications to limit the number of required clock sources in the system. In this type of application, a single 25 MHz or 50 MHz crystal can be applied directly to the processors. The 25 MHz or 50 MHz output of CLKBUF can then be connected to an external Ethernet MII or RMII PHY device.

Because of the default 10× PLL multiplier, providing a 50 MHz CLKIN exceeds the recommended operating conditions of the lower speed grades. Because of this restriction, an RMII PHY requiring a 50 MHz clock input cannot be clocked directly from the CLKBUF pin for the lower speed grades. In this case, either provide a separate 50 MHz clock source, or use an RMII PHY with 25 MHz clock input options. The CLKBUF output is active by default and can be disabled using the VR_CTL register for power savings.

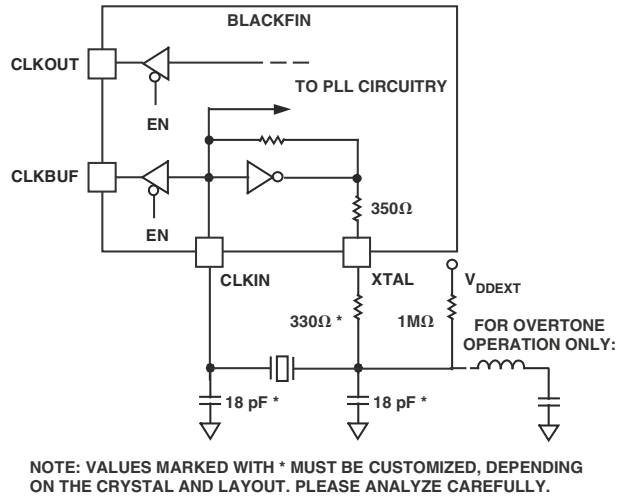

Figure 6. External Crystal Connections

The Blackfin core runs at a different clock rate than the on-chip peripherals. As shown in Figure 7, the core clock (CCLK) and system peripheral clock (SCLK) are derived from the input clock (CLKIN) signal. An on-chip PLL is capable of multiplying the CLKIN signal by a programmable 0.5× to 64× multiplication factor (bounded by specified minimum and maximum VCO frequencies). The default multiplier is 10×, but it can be modified by a software instruction sequence in the PLL_CTL register.

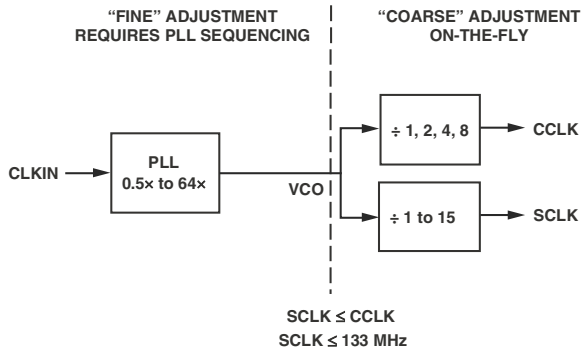

Figure 7. Frequency Modification Methods

On-the-fly CCLK and SCLK frequency changes can be effected by simply writing to the PLL_DIV register. Whereas the maximum allowed CCLK and SCLK rates depend on the applied voltages V_{DDINT} and V_{DDEXT}, the VCO is always permitted to run up to the frequency specified by the part's speed grade. The CLKOUT pin reflects the SCLK frequency to the off-chip world. It belongs to the SDRAM interface, but it functions as a refer-

ence signal in other timing specifications as well. While active by default, it can be disabled using the EBIU_SDGCTL and EBIU_AMGCTL registers.

All on-chip peripherals are clocked by the system clock (SCLK). The system clock frequency is programmable by means of the SSEL3–0 bits of the PLL_DIV register. The values programmed into the SSEL fields define a divide ratio between the PLL output (VCO) and the system clock. SCLK divider values are 1 through 15. Table 6 illustrates typical system clock ratios.

Table 6. Example System Clock Ratios

Signal Name SSEL3–0	Divider Ratio VCO:SCLK	Example Frequency Ratios (MHz)	
		VCO	SCLK
0001	1:1	100	100
0110	6:1	300	50
1010	10:1	500	50

Note that the divisor ratio must be chosen to limit the system clock frequency to its maximum of f_{SCLK}. The SSEL value can be changed dynamically without any PLL lock latencies by writing the appropriate values to the PLL divisor register (PLL_DIV).

The core clock (CCLK) frequency can also be dynamically changed by means of the CSEL1–0 bits of the PLL_DIV register. Supported CCLK divider ratios are 1, 2, 4, and 8, as shown in Table 7. This programmable core clock capability is useful for fast core frequency modifications.

Table 7. Core Clock Ratios

Signal Name CSEL1–0	Divider Ratio VCO:CCLK	Example Frequency Ratios (MHz)	
		VCO	CCLK
00	1:1	300	300
01	2:1	300	150
10	4:1	500	125
11	8:1	200	25

The maximum CCLK frequency not only depends on the part's speed grade (see Ordering Guide on Page 68), it also depends on the applied V_{DDINT} voltage (see Table 10, Table 11, and Table 12 on Page 25 for details). The maximal system clock rate (SCLK) depends on the chip package and the applied V_{DDEXT} voltage (see Table 14 on Page 25).

BOOTING MODES

The ADSP-BF534/ADSP-BF536/ADSP-BF537 processor has six mechanisms (listed in Table 8) for automatically loading internal and external memory after a reset. A seventh mode is provided to execute from external memory, bypassing the boot sequence.

Table 8. Booting Modes

BMODE2–0	Description
000	Execute from 16-bit external memory (bypass boot ROM)
001	Boot from 8-bit or 16-bit memory (EPROM/flash)
010	Reserved
011	Boot from serial SPI memory (EEPROM/flash)
100	Boot from SPI host (slave mode)
101	Boot from serial TWI memory (EEPROM/flash)
110	Boot from TWI host (slave mode)
111	Boot from UART host (slave mode)

The BMODE pins of the reset configuration register, sampled during power-on resets and software-initiated resets, implement the following modes:

- Execute from 16-bit external memory – Execution starts from address 0x2000 0000 with 16-bit packing. The boot ROM is bypassed in this mode. All configuration settings are set for the slowest device possible (3-cycle hold time; 15-cycle R/W access times; 4-cycle setup).
- Boot from 8-bit and 16-bit external flash memory – The 8-bit or 16-bit flash boot routine located in Boot ROM memory space is set up using asynchronous memory bank 0. All configuration settings are set for the slowest device possible (3-cycle hold time; 15-cycle R/W access times; 4-cycle setup). The Boot ROM evaluates the first byte of the boot stream at address 0x2000 0000. If it is 0x40, 8-bit boot is performed. A 0x60 byte assumes a 16-bit memory device and performs 8-bit DMA. A 0x20 byte also assumes 16-bit memory but performs 16-bit DMA.
- Boot from serial SPI memory (EEPROM or flash) – 8-, 16-, or 24-bit addressable devices are supported as well as AT45DB041, AT45DB081, AT45DB161, AT45DB321, AT45DB642, and AT45DB1282 DataFlash® devices from Atmel. The SPI uses the PF10/SPI SSEL1 output pin to select a single SPI EEPROM/flash device, submits a read command and successive address bytes (0x00) until a valid 8-, 16-, or 24-bit, or Atmel addressable device is detected, and begins clocking data into the processor.
- Boot from SPI host device – The Blackfin processor operates in SPI slave mode and is configured to receive the bytes of the .LDR file from an SPI host (master) agent. To hold off the host device from transmitting while the boot ROM is busy, the Blackfin processor asserts a GPIO pin, called host wait (HWAIT), to signal the host device not to send any more bytes until the flag is deasserted. The flag is chosen by the user and this information is transferred to the Blackfin processor via bits 10:5 of the FLAG header.
- Boot from UART – Using an autobaud handshake sequence, a boot-stream-formatted program is downloaded by the host. The host agent selects a baud rate within the UART's clocking capabilities. When performing the autobaud, the UART expects an "@" (boot stream) character

(8 bits data, 1 start bit, 1 stop bit, no parity bit) on the RXD pin to determine the bit rate. It then replies with an acknowledgement that is composed of 4 bytes: 0xBF, the value of UART_DLL, the value of UART_DLH, and 0x00. The host can then download the boot stream. When the processor needs to hold off the host, it deasserts CTS. Therefore, the host must monitor this signal.

- Boot from serial TWI memory (EEPROM/flash) – The Blackfin processor operates in master mode and selects the TWI slave with the unique ID 0xA0. It submits successive read commands to the memory device starting at 2-byte internal address 0x0000 and begins clocking data into the processor. The TWI memory device should comply with Philips I^2C Bus Specification version 2.1 and have the capability to auto-increment its internal address counter such that the contents of the memory device can be read sequentially.
- Boot from TWI host – The TWI host agent selects the slave with the unique ID 0x5F. The processor replies with an acknowledgement and the host can then download the boot stream. The TWI host agent should comply with Philips I^2C Bus Specification version 2.1. An I^2C multiplexer can be used to select one processor at a time when booting multiple processors from a single TWI.

For each of the boot modes, a 10-byte header is first brought in from an external device. The header specifies the number of bytes to be transferred and the memory destination address. Multiple memory blocks can be loaded by any boot sequence. Once all blocks are loaded, program execution commences from the start of L1 instruction SRAM.

In addition, Bit 4 of the reset configuration register can be set by application code to bypass the normal boot sequence during a software reset. For this case, the processor jumps directly to the beginning of L1 instruction memory.

To augment the boot modes, a secondary software loader can be added to provide additional booting mechanisms. This secondary loader could provide the capability to boot from flash, variable baud rate, and other sources. In all boot modes except bypass, program execution starts from on-chip L1 memory address 0xFFA0 0000.

INSTRUCTION SET DESCRIPTION

The Blackfin processor family assembly language instruction set employs an algebraic syntax designed for ease of coding and readability. The instructions have been specifically tuned to provide a flexible, densely encoded instruction set that compiles to a very small final memory size. The instruction set also provides fully featured multifunction instructions that allow the programmer to use many of the processor core resources in a single instruction. Coupled with many features more often seen on microcontrollers, this instruction set is very efficient when compiling C and C++ source code. In addition, the architecture supports both user (algorithm/application code) and supervisor (O/S kernel, device drivers, debuggers, ISRs) modes of operation, allowing multiple levels of access to core processor resources.

The assembly language, which takes advantage of the processor's unique architecture, offers the following advantages:

- Seamlessly integrated DSP/MCU features are optimized for both 8-bit and 16-bit operations.
- A multi-issue load/store modified-Harvard architecture, which supports two 16-bit MAC or four 8-bit ALU + two load/store + two pointer updates per cycle.
- All registers, I/O, and memory are mapped into a unified 4G byte memory space, providing a simplified programming model.
- Microcontroller features, such as arbitrary bit and bit-field manipulation, insertion, and extraction; integer operations on 8-, 16-, and 32-bit data-types; and separate user and supervisor stack pointers.
- Code density enhancements, which include intermixing of 16-bit and 32-bit instructions (no mode switching, no code segregation). Frequently used instructions are encoded in 16 bits.

DEVELOPMENT TOOLS

Blackfin processors are supported with a complete set of CROSSCORE®† software and hardware development tools, including Analog Devices emulators and the VisualDSP++®‡ development environment. The same emulator hardware that supports other Analog Devices processors also fully emulates the Blackfin processor family.

The VisualDSP++ project management environment lets programmers develop and debug an application. This environment includes an easy to use assembler that is based on an algebraic syntax, an archiver (librarian/library builder), a linker, a loader, a cycle-accurate instruction-level simulator, a C/C++ compiler, and a C/C++ runtime library that includes DSP and mathematical functions. A key point for these tools is C/C++ code efficiency. The compiler has been developed for efficient translation of C/C++ code to Blackfin assembly. The Blackfin processor has architectural features that improve the efficiency of compiled C/C++ code.

The VisualDSP++ debugger has a number of important features. Data visualization is enhanced by a plotting package that offers a significant level of flexibility. This graphical representation of user data enables the programmer to quickly determine the performance of an algorithm. As algorithms grow in complexity, this capability can have increasing significance on the designer's development schedule, increasing productivity. Statistical profiling enables the programmer to nonintrusively poll the processor as it is running the program. This feature, unique to VisualDSP++, enables the software developer to passively gather important code execution metrics without interrupting the real-time characteristics of the program. Essentially, the developer can identify bottlenecks in software quickly and

† CROSSCORE is a registered trademark of Analog Devices, Inc.
‡ VisualDSP++ is a registered trademark of Analog Devices, Inc.

efficiently. By using the profiler, the programmer can focus on those areas in the program that impact performance and take corrective action.

Debugging both C/C++ and assembly programs with the VisualDSP++ debugger, programmers can

- View mixed C/C++ and assembly code (interleaved source and object information).
- Insert breakpoints.
- Set conditional breakpoints on registers, memory, and stacks.
- Trace instruction execution.
- Perform linear or statistical profiling of program execution.
- Fill, dump, and graphically plot the contents of memory.
- Perform source level debugging.
- Create custom debugger windows.

The VisualDSP++ IDE lets programmers define and manage software development. Its dialog boxes and property pages let programmers configure and manage all development tools, including color syntax highlighting in the VisualDSP++ editor. These capabilities permit programmers to

- Control how the development tools process inputs and generate outputs.
- Maintain a one-to-one correspondence with the tool's command line switches.

The VisualDSP++ Kernel (VDK) incorporates scheduling and resource management tailored specifically to address the memory and timing constraints of embedded, real-time programming. These capabilities enable engineers to develop code more effectively, eliminating the need to start from the very beginning when developing new application code. The VDK features include threads, critical and unscheduled regions, semaphores, events, and device flags. The VDK also supports priority-based, pre-emptive, cooperative, and time-sliced scheduling approaches. In addition, the VDK was designed to be scalable. If the application does not use a specific feature, the support code for that feature is excluded from the target system.

Because the VDK is a library, a developer can decide whether to use it or not. The VDK is integrated into the VisualDSP++ development environment, but can also be used with standard command line tools. When the VDK is used, the development environment assists the developer with many error prone tasks and assists in managing system resources, automating the generation of various VDK-based objects, and visualizing the system state when debugging an application that uses the VDK.

The expert linker can be used to visually manipulate the placement of code and data in the embedded system. Memory utilization can be viewed in a color-coded graphical form. Code and data can be easily moved to different areas of the processor or external memory with the drag of the mouse. Runtime stack and heap usage can be examined. The expert linker is fully compatible with existing linker definition file (LDF), allowing the developer to move between the graphical and textual environments.

Analog Devices emulators use the IEEE 1149.1 JTAG test access port of the Blackfin to monitor and control the target board processor during emulation. The emulator provides full-speed emulation, allowing inspection and modification of memory, registers, and processor stacks. Nonintrusive in-circuit emulation is assured by the use of the processor's JTAG interface—the emulator does not affect target system loading or timing.

In addition to the software and hardware development tools available from Analog Devices, third parties provide a wide range of tools supporting the Blackfin processor family. Third party software tools include DSP libraries, real-time operating systems, and block diagram design tools.

EZ-KIT Lite® Evaluation Board

For evaluation of ADSP-BF534/ADSP-BF536/ADSP-BF537 processors, use the ADSP-BF537 EZ-KIT Lite board available from Analog Devices. Order part number ADDS-BF537-EZLITE. The board comes with on-chip emulation capabilities and is equipped to enable software development. Multiple daughter cards are available.

DESIGNING AN EMULATOR-COMPATIBLE PROCESSOR BOARD

The Analog Devices family of emulators are tools that every system developer needs in order to test and debug hardware and software systems. Analog Devices has supplied an IEEE 1149.1 JTAG Test Access Port (TAP) on each JTAG processor. The emulator uses the TAP to access the internal features of the processor, allowing the developer to load code, set breakpoints, observe variables, observe memory, and examine registers. The processor must be halted to send data and commands, but once an operation has been completed by the emulator, the processor system is set running at full speed with no impact on system timing.

To use these emulators, the target board must include a header that connects the processor's JTAG port to the emulator.

For details on target board design issues including mechanical layout, single processor connections, multiprocessor scan chains, signal buffering, signal termination, and emulator pod logic, see *Analog Devices JTAG Emulation Technical Reference (EE-68)* on the Analog Devices website under www.analog.com/ee-notes. This document is updated regularly to keep pace with improvements to emulator support.

RELATED DOCUMENTS

The following publications that describe the ADSP-BF534/ADSP-BF536/ADSP-BF537 processors (and related processors) can be ordered from any Analog Devices sales office or accessed electronically on our website:

- *Getting Started with Blackfin Processors*
- *ADSP-BF537 Blackfin Processor Hardware Reference*
- *ADSP-BF53x/ADSP-BF56x Blackfin Processor Programming Reference*
- *ADSP-BF534/ADSP-BF536/ADSP-BF537 Blackfin Processor Anomaly List*

RELATED SIGNAL CHAINS

A *signal chain* is a series of signal-conditioning electronic components that receive input (data acquired from sampling either real-time phenomena or from stored data) in tandem, with the output of one portion of the chain supplying input to the next. Signal chains are often used in signal processing applications to gather and process data or to apply system controls based on analysis of real-time phenomena. For more information about this term and related topics, see the "signal chain" entry in Wikipedia or the Glossary of EE Terms on the Analog Devices website.

Analog Devices eases signal processing system development by providing signal processing components that are designed to work together well. A tool for viewing relationships between specific applications and related components is available on the www.analog.com website.

The Application Signal Chains page in the Circuits from the Lab™ site (http://www.analog.com/signalchains) provides:

- Graphical circuit block diagram presentation of signal chains for a variety of circuit types and applications
- Drill down links for components in each chain to selection guides and application information
- Reference designs applying best practice design techniques

PIN DESCRIPTIONS

The ADSP-BF534/ADSP-BF536/ADSP-BF537 processors pin definitions are listed in Table 9. In order to maintain maximum functionality and reduce package size and pin count, some pins have dual, multiplexed functions. In cases where pin function is reconfigurable, the default state is shown in plain text, while the alternate function is shown in italics. Pins shown with an asterisk after their name (*) offer high source/high sink current capabilities.

All pins are three-stated during and immediately after reset, with the exception of the external memory interface, asynchronous and synchronous memory control, and the buffered XTAL output pin (CLKBUF). On the external memory interface, the control and address lines are driven high, with the exception of CLKOUT, which toggles at the system clock rate. If $\overline{BR}$ is active (whether or not $\overline{RESET}$ is asserted), the memory pins are also three-stated. During hibernate, all outputs are three-stated unless otherwise noted in Table 9.

All I/O pins have their input buffers disabled with the exception of the pins noted in the data sheet that need pull-ups or pull-downs if unused.

The SDA (serial data) and SCL (serial clock) pins are open drain and therefore require a pull-up resistor. Consult version 2.1 of the I^2C specification for the proper resistor value.

Table 9. Pin Descriptions

Pin Name	Type	Function	Driver Type[1]
Memory Interface			
ADDR19–1	O	Address Bus for Async Access	A
DATA15–0	I/O	Data Bus for Async/Sync Access	A
$\overline{ABE1–0}$/SDQM1–0	O	Byte Enables/Data Masks for Async/Sync Access	A
$\overline{BR}$	I	Bus Request (This pin should be pulled high when not used.)	
$\overline{BG}$	O	Bus Grant	A
$\overline{BGH}$	O	Bus Grant Hang	A
Asynchronous Memory Control			
$\overline{AMS3–0}$	O	Bank Select (Require pull-ups if hibernate is used.)	A
ARDY	I	Hardware Ready Control	
$\overline{AOE}$	O	Output Enable	A
$\overline{ARE}$	O	Read Enable	A
$\overline{AWE}$	O	Write Enable	A
Synchronous Memory Control			
$\overline{SRAS}$	O	Row Address Strobe	A
$\overline{SCAS}$	O	Column Address Strobe	A
$\overline{SWE}$	O	Write Enable	A
SCKE	O	Clock Enable(Requires a pull-down if hibernate with SDRAM self-refresh is used.)	A
CLKOUT	O	Clock Output	B
SA10	O	A10 Pin	A
$\overline{SMS}$	O	Bank Select	A

Table 9. Pin Descriptions (Continued)

Pin Name	Type	Function	Driver Type[1]
Port F: GPIO/UART1–0/Timer7–0/SPI/ External DMA Request/PPI (= High Source/High Sink Pin)*			
PF0* – GPIO/*UART0 TX/DMAR0*	I/O	GPIO/*UART0 Transmit/DMA Request 0*	C
PF1* – GPIO/*UART0 RX/DMAR1/TACI1*	I/O	GPIO/*UART0 Receive/DMA Request 1/Timer1 Alternate Input Capture*	C
PF2* – GPIO/*UART1 TX/TMR7*	I/O	GPIO/*UART1 Transmit/Timer7*	C
PF3* – GPIO/*UART1 RX/TMR6/TACI6*	I/O	GPIO/*UART1 Receive/Timer6/Timer6 Alternate Input Capture*	C
PF4* – GPIO/*TMR5/SPI SSEL6*	I/O	GPIO/*Timer5/SPI Slave Select Enable 6*	C
PF5* – GPIO/*TMR4/SPI SSEL5*	I/O	GPIO/*Timer4/SPI Slave Select Enable 5*	C
PF6* – GPIO/*TMR3/SPI SSEL4*	I/O	GPIO/*Timer3/SPI Slave Select Enable 4*	C
PF7* – GPIO/*TMR2/PPI FS3*	I/O	GPIO/*Timer2/PPI Frame Sync 3*	C
PF8 – GPIO/*TMR1/PPI FS2*	I/O	GPIO/*Timer1/PPI Frame Sync 2*	C
PF9 – GPIO/*TMR0/PPI FS1*	I/O	GPIO/*Timer0/PPI Frame Sync 1*	C
PF10 – GPIO/*SPI SSEL1*	I/O	GPIO/*SPI Slave Select Enable 1*	C
PF11 – GPIO/*SPI MOSI*	I/O	GPIO/*SPI Master Out Slave In*	C
PF12 – GPIO/*SPI MISO*	I/O	GPIO/*SPI Master In Slave Out* (This pin should be pulled high through a 4.7 kΩ resistor if booting via the SPI port.)	C
PF13 – GPIO/*SPI SCK*	I/O	GPIO/*SPI Clock*	D
PF14 – GPIO/*SPI SS/TACLK0*	I/O	GPIO/*SPI Slave Select/Alternate Timer0 Clock Input*	C
PF15 – GPIO/*PPI CLK/TMRCLK*	I/O	GPIO/*PPI Clock/External Timer Reference*	C
Port G: GPIO/PPI/SPORT1			
PG0 – GPIO/*PPI D0*	I/O	GPIO/*PPI Data 0*	C
PG1 – GPIO/*PPI D1*	I/O	GPIO/*PPI Data 1*	C
PG2 – GPIO/*PPI D2*	I/O	GPIO/*PPI Data 2*	C
PG3 – GPIO/*PPI D3*	I/O	GPIO/*PPI Data 3*	C
PG4 – GPIO/*PPI D4*	I/O	GPIO/*PPI Data 4*	C
PG5 – GPIO/*PPI D5*	I/O	GPIO/*PPI Data 5*	C
PG6 – GPIO/*PPI D6*	I/O	GPIO/*PPI Data 6*	C
PG7 – GPIO/*PPI D7*	I/O	GPIO/*PPI Data 7*	C
PG8 – GPIO/*PPI D8/DR1SEC*	I/O	GPIO/*PPI Data 8/SPORT1 Receive Data Secondary*	C
PG9 – GPIO/*PPI D9/DT1SEC*	I/O	GPIO/*PPI Data 9/SPORT1 Transmit Data Secondary*	C
PG10 – GPIO/*PPI D10/RSCLK1*	I/O	GPIO/*PPI Data 10/SPORT1 Receive Serial Clock*	D
PG11 – GPIO/*PPI D11/RFS1*	I/O	GPIO/*PPI Data 11/SPORT1 Receive Frame Sync*	C
PG12 – GPIO/*PPI D12/DR1PRI*	I/O	GPIO/*PPI Data 12/SPORT1 Receive Data Primary*	C
PG13 – GPIO/*PPI D13/TSCLK1*	I/O	GPIO/*PPI Data 13/SPORT1 Transmit Serial Clock*	D
PG14 – GPIO/*PPI D14/TFS1*	I/O	GPIO/*PPI Data 14/SPORT1 Transmit Frame Sync*	C
PG15 – GPIO/*PPI D15/DT1PRI*	I/O	GPIO/*PPI Data 15/SPORT1 Transmit Data Primary*	C

Table 9. Pin Descriptions (Continued)

Pin Name	Type	Function	Driver Type[1]
Port H: GPIO/10/100 Ethernet MAC (On ADSP-BF534, these pins are GPIO only)			
PH0 – GPIO/*ETxD0*	I/O	GPIO/*Ethernet MII or RMII Transmit D0*	E
PH1 – GPIO/*ETxD1*	I/O	GPIO/*Ethernet MII or RMII Transmit D1*	E
PH2 – GPIO/*ETxD2*	I/O	GPIO/*Ethernet MII Transmit D2*	E
PH3 – GPIO/*ETxD3*	I/O	GPIO/*Ethernet MII Transmit D3*	E
PH4 – GPIO/*ETxEN*	I/O	GPIO/*Ethernet MII or RMII Transmit Enable*	E
PH5 – GPIO/*MII TxCLK/RMII REF_CLK*	I/O	GPIO/*Ethernet MII Transmit Clock/RMII Reference Clock*	E
PH6 – GPIO/*MII* $\overline{PHYINT}$/*RMII* $\overline{MDINT}$	I/O	GPIO/*Ethernet MII PHY Interrupt/RMII Management Data Interrupt* (This pin should be pulled high when used as a hibernate wake-up.)	E
PH7 – GPIO/*COL*	I/O	GPIO/*Ethernet Collision*	E
PH8 – GPIO/*ERxD0*	I/O	GPIO/*Ethernet MII or RMII Receive D0*	E
PH9 – GPIO/*ERxD1*	I/O	GPIO/*Ethernet MII or RMII Receive D1*	E
PH10 – GPIO/*ERxD2*	I/O	GPIO/*Ethernet MII Receive D2*	E
PH11 – GPIO/*ERxD3*	I/O	GPIO/*Ethernet MII Receive D3*	E
PH12 – GPIO/*ERxDV/TACLK5*	I/O	GPIO/*Ethernet MII Receive Data Valid/Alternate Timer5 Input Clock*	E
PH13 – GPIO/*ERxCLK/TACLK6*	I/O	GPIO/*Ethernet MII Receive Clock/Alternate Timer6 Input Clock*	E
PH14 – GPIO/*ERxER/TACLK7*	I/O	GPIO/*Ethernet MII or RMII Receive Error/Alternate Timer7 Input Clock*	E
PH15 – GPIO/*MII CRS/RMII CRS_DV*	I/O	GPIO/*Ethernet MII Carrier Sense/Ethernet RMII Carrier Sense and Receive Data Valid*	E
Port J: SPORT0/TWI/SPI Select/CAN			
PJ0 – MDC	O	Ethernet Management Channel Clock (On ADSP-BF534 processors, do not connect this pin.)	E
PJ1 – MDIO	I/O	Ethernet Management Channel Serial Data (On ADSP-BF534 processors, tie this pin to ground.)	E
PJ2 – SCL	I/O	TWI Serial Clock (This pin is an open-drain output and requires a pull-up resistor.)	F
PJ3 – SDA	I/O	TWI Serial Data (This pin is an open-drain output and requires a pull-up resistor.)	F
PJ4 – DR0SEC/*CANRX/TACI0*	I	SPORT0 Receive Data Secondary/*CAN Receive/Timer0 Alternate Input Capture*	
PJ5 – DT0SEC/*CANTX/SPI SSEL7*	O	SPORT0 Transmit Data Secondary/*CAN Transmit/SPI Slave Select Enable 7*	C
PJ6 – RSCLK0/*TACLK2*	I/O	SPORT0 Receive Serial Clock/*Alternate Timer2 Clock Input*	D
PJ7 – RFS0/*TACLK3*	I/O	SPORT0 Receive Frame Sync/*Alternate Timer3 Clock Input*	C
PJ8 – DR0PRI/*TACLK4*	I	SPORT0 Receive Data Primary/*Alternate Timer4 Clock Input*	
PJ9 – TSCLK0/*TACLK1*	I/O	SPORT0 Transmit Serial Clock/*Alternate Timer1 Clock Input*	D
PJ10 – TFS0/*SPI SSEL3*	I/O	SPORT0 Transmit Frame Sync/*SPI Slave Select Enable 3*	C
PJ11 – DT0PRI/*SPI SSEL2*	O	SPORT0 Transmit Data Primary/*SPI Slave Select Enable 2*	C
Real-Time Clock			
RTXI	I	RTC Crystal Input (This pin should be pulled low when not used.)	
RTXO	O	RTC Crystal Output (Does not three-state in hibernate.)	
JTAG Port			
TCK	I	JTAG Clock	
TDO	O	JTAG Serial Data Out	C
TDI	I	JTAG Serial Data In	
TMS	I	JTAG Mode Select	
$\overline{TRST}$	I	JTAG Reset (This pin should be pulled low if the JTAG port is not used.)	
$\overline{EMU}$	O	Emulation Output	C

Table 9. Pin Descriptions (Continued)

Pin Name	Type	Function	Driver Type[1]
Clock			
CLKIN	I	Clock/Crystal Input	
XTAL	O	Crystal Output (If CLKBUF is enabled, does not three-state during hibernate.)	
CLKBUF	O	Buffered XTAL Output (If enabled, does not three-state during hibernate.)	E
Mode Controls			
$\overline{\text{RESET}}$	I	Reset	
$\overline{\text{NMI}}$	I	Nonmaskable Interrupt (This pin should be pulled high when not used.)	
BMODE2–0	I	Boot Mode Strap 2-0 (These pins must be pulled to the state required for the desired boot mode.)	
Voltage Regulator			
VROUT1–0	O	External FET Drive (These pins should be left unconnected when not used and are driven high during hibernate.)	
Supplies			
V_{DDEXT}	P	I/O Power Supply	
V_{DDINT}	P	Internal Power Supply	
V_{DDRTC}	P	Real-Time Clock Power Supply (This pin should be connected to V_{DDEXT} when not used and should remain powered at all times.)	
GND	G	External Ground	

[1] See Output Drive Currents on Page 51 for more information about each driver types.

SPECIFICATIONS

Note that component specifications are subject to change without notice.

OPERATING CONDITIONS

Parameter		Conditions	Min	Nominal	Max	Unit
V_{DDINT}	Internal Supply Voltage[1]	Nonautomotive 300 MHz, 400 MHz, and 500 MHz speed grade models[2]	0.8	1.2	1.32	V
V_{DDINT}	Internal Supply Voltage[1]	Nonautomotive 533 MHz speed grade models[2]	0.8	1.25	1.375	V
V_{DDINT}	Internal Supply Voltage[1]	Nonautomotive 600 MHz speed grade models[2]	0.8	1.3	1.43	V
V_{DDINT}	Internal Supply Voltage[1]	Automotive grade models and +105°C nonautomotive grade models[2]	0.95	1.2	1.32	V
V_{DDEXT}	External Supply Voltage	Nonautomotive grade models[2]	2.25	2.5 or 3.3	3.6	V
V_{DDEXT}	External Supply Voltage	Automotive grade models and +105°C nonautomotive grade models[2]	2.7	3.0 or 3.3	3.6	V
V_{DDRTC}	Real-Time Clock Power Supply Voltage		2.25		3.6	V
V_{IH}	High Level Input Voltage[3, 4]	V_{DDEXT} = Maximum	2.0			V
$V_{IHCLKIN}$	High Level Input Voltage[5]	V_{DDEXT} = Maximum	2.2			V
V_{IH5V}	5.0 V Tolerant Pins, High Level Input Voltage[6]		$0.7 \times V_{DDEXT}$			V
V_{IH5V}	5.0 V Tolerant Pins, High Level Input Voltage[7]	V_{DDEXT} = Maximum	2.0			V
V_{IL}	Low Level Input Voltage[3, 8]	V_{DDEXT} = Minimum			+0.6	V
V_{IL5V}	5.0 V Tolerant Pins, Low Level Input Voltage[6]				$0.3 \times V_{DDEXT}$	V
V_{IL5V}	5.0 V Tolerant Pins, Low Level Input Voltage[7]	V_{DDEXT} = Minimum			+0.8	V
T_J	Junction Temperature	208-Ball Chip Scale Package Ball Grid Array (CSP_BGA) @ $T_{AMBIENT}$ = –40°C to +105°C	–40		+120	°C
T_J	Junction Temperature	208-Ball Chip Scale Package Ball Grid Array (CSP_BGA) @ $T_{AMBIENT}$ = –40°C to +85°C	–40		+105	°C
T_J	Junction Temperature	208-Ball Chip Scale Package Ball Grid Array (CSP_BGA) @ $T_{AMBIENT}$ = 0°C to +70°C	0		+95	°C
T_J	Junction Temperature	182-Ball Chip Scale Package Ball Grid Array (CSP_BGA) @ $T_{AMBIENT}$ = –40°C to +85°C	–40		+105	°C
T_J	Junction Temperature	182-Ball Chip Scale Package Ball Grid Array (CSP_BGA) @ $T_{AMBIENT}$ = 0°C to +70°C	0		+100	°C

[1] The regulator can generate V_{DDINT} at levels of 0.85 V to 1.2 V with –5% to +10% tolerance, 1.25 V with –4% to +10% tolerance, and 1.3 V with –0% to +10% tolerance. The required V_{DDINT} is a function of speed grade and operating frequency. See Table 10, Table 11, and Table 12 for details.

[2] See Ordering Guide on Page 68.

[3] Bidirectional pins (DATA15–0, PF15–0, PG15–0, PH15–0, TFS0, TSCLK0, RSCLK0, RFS0, MDIO) and input pins ($\overline{BR}$, ARDY, DR0PRI, DR0SEC, RTXI, TCK, TDI, TMS, $\overline{TRST}$, CLKIN, $\overline{RESET}$, $\overline{NMI}$, and BMODE2–0) of the ADSP-BF534/ADSP-BF536/ADSP-BF537 are 3.3 V-tolerant (always accept up to 3.6 V maximum V_{IH}). Voltage compliance (on outputs, V_{OH}) is limited by the V_{DDEXT} supply voltage.

[4] Parameter value applies to all input and bidirectional pins except CLKIN, SDA, and SCL.

[5] Parameter value applies to CLKIN pin only.

[6] Applies to pins PJ2/SCL and PJ3/SDA which are 5.0 V tolerant (always accept up to 5.5 V maximum V_{IH}). Voltage compliance (on outputs, V_{OH}) is limited by the V_{DDEXT} supply voltage.

[7] Applies to pin PJ4/DR0SEC/CANRX/TACI0 which is 5.0 V tolerant (always accepts up to 5.5 V maximum V_{IH}). Voltage compliance (on outputs, V_{OH}) is limited by the V_{DDEXT} supply voltage.

[8] Parameter value applies to all input and bidirectional pins except SDA and SCL.

Table 10 through Table 12 describe the voltage/frequency requirements for the ADSP-BF534/ADSP-BF536/ADSP-BF537 processor clocks. Take care in selecting MSEL, SSEL, and CSEL ratios so as not to exceed the maximum core clock and system clock. Table 13 describes phase-locked loop operating conditions.

Table 10. Core Clock Requirements—500 MHz, 533 MHz, and 600 MHz Speed Grades[1]

Parameter		Internal Regulator Setting	Max	Unit
f_{CCLK}	Core Clock Frequency (V_{DDINT} = 1.30 V Minimum)[2]	1.30 V	600	MHz
f_{CCLK}	Core Clock Frequency (V_{DDINT} = 1.20 V Minimum)[3]	1.25 V	533	MHz
f_{CCLK}	Core Clock Frequency (V_{DDINT} = 1.14 V Minimum)	1.20 V	500	MHz
f_{CCLK}	Core Clock Frequency (V_{DDINT} = 1.045 V Minimum)	1.10 V	444	MHz
f_{CCLK}	Core Clock Frequency (V_{DDINT} = 0.95 V Minimum)	1.00 V	400	MHz
f_{CCLK}	Core Clock Frequency (V_{DDINT} = 0.85 V Minimum)	0.90 V	333	MHz
f_{CCLK}	Core Clock Frequency (V_{DDINT} = 0.8 V Minimum)	0.85 V	250	MHz

[1] See Ordering Guide on Page 68.
[2] Applies to 600 MHz models only. See Ordering Guide on Page 68.
[3] Applies to 533 MHz and 600 MHz models only. See Ordering Guide on Page 68.

Table 11. Core Clock Requirements—400 MHz Speed Grade[1]

Parameter		Internal Regulator Setting	120°C ≥ T_J > 105°C Max	All[2] Other T_J Max	Unit
f_{CCLK}	Core Clock Frequency (V_{DDINT} = 1.14 V Minimum)	1.20 V	400	400	MHz
f_{CCLK}	Core Clock Frequency (V_{DDINT} = 1.045 V Minimum)	1.10 V	333	363	MHz
f_{CCLK}	Core Clock Frequency (V_{DDINT} = 0.95 V Minimum)	1.00 V	295	333	MHz
f_{CCLK}	Core Clock Frequency (V_{DDINT} = 0.85 V Minimum)	0.90 V		280	MHz
f_{CCLK}	Core Clock Frequency (V_{DDINT} = 0.8 V Minimum)	0.85 V		250	MHz

[1] See Ordering Guide on Page 68.
[2] See Operating Conditions on Page 24.

Table 12. Core Clock Requirements—300 MHz Speed Grade[1]

Parameter		Internal Regulator Setting	Max	Unit
f_{CCLK}	Core Clock Frequency (V_{DDINT} = 1.14 V Minimum)	1.20 V	300	MHz
f_{CCLK}	Core Clock Frequency (V_{DDINT} = 1.045 V Minimum)	1.10 V	255	MHz
f_{CCLK}	Core Clock Frequency (V_{DDINT} = 0.95 V Minimum)	1.00 V	210	MHz
f_{CCLK}	Core Clock Frequency (V_{DDINT} = 0.85 V Minimum)	0.90 V	180	MHz
f_{CCLK}	Core Clock Frequency (V_{DDINT} = 0.8 V Minimum)	0.85 V	160	MHz

[1] See Ordering Guide on Page 68.

Table 13. Phase-Locked Loop Operating Conditions

Parameter		Min	Max	Unit
f_{VCO}	Voltage Controlled Oscillator (VCO) Frequency	50	Max f_{CCLK}	MHz

Table 14. System Clock Requirements

Parameter	Condition	Max	Unit
f_{SCLK}[1]	V_{DDEXT} = 3.3 V or 2.5 V, V_{DDINT} ≥ 1.14 V	133[2]	MHz
f_{SCLK}[1]	V_{DDEXT} = 3.3 V or 2.5 V, V_{DDINT} < 1.14 V	100	MHz

[1] f_{SCLK} must be less than or equal to f_{CCLK} and is subject to additional restrictions for SDRAM interface operation. See Table 27 on Page 35.
[2] Rounded number. Actual test specification is SCLK period of 7.5 ns. See Table 27 on Page 35.

ELECTRICAL CHARACTERISTICS

Parameter		Test Conditions	300 MHz/400 MHz[1] Min	Typ	Max	500 MHz/533 MHz/600 MHz[2] Min	Typ	Max	Unit
V_{OH}[3]	High Level Output Voltage	V_{DDEXT} = 2.5 V/3.0 V/ 3.3 V ± 10%, I_{OH} = –0.5 mA	V_{DDEXT} – 0.5			V_{DDEXT} – 0.5			V
V_{OH}[4]		V_{DDEXT} = 3.3 V ± 10%, I_{OH} = –8 mA	V_{DDEXT} – 0.5			V_{DDEXT} – 0.5			V
		V_{DDEXT} = 2.5 V/3.0 V ± 10%, I_{OH} = –6 mA	V_{DDEXT} – 0.5			V_{DDEXT} – 0.5			V
V_{OH}[5]		V_{DDEXT} = 2.5 V/3.0 V/ 3.3 V ± 10%, I_{OH} = –2.0 mA	V_{DDEXT} – 0.5			V_{DDEXT} – 0.5			V
I_{OH}[6]	High Level Output Current	V_{OH} = V_{DDEXT} – 0.5 V Min			–64			–64	mA
I_{OH}[7]		V_{OH} = V_{DDEXT} – 0.5 V Min			–144			–144	mA
V_{OL}[3]	Low Level Output Voltage	V_{DDEXT} = 2.5 V/3.0 V/ 3.3 V ± 10%, I_{OL} = 2.0 mA			0.4			0.4	V
V_{OL}[4]		V_{DDEXT} = 3.3 V ± 10%, I_{OL} = 8 mA			0.5			0.5	V
		V_{DDEXT} = 2.5 V/3.0 V ± 10%, I_{OL} = 6 mA			0.5			0.5	V
V_{OL}[5]		V_{DDEXT} = 2.5 V/3.0 V/ 3.3 V ± 10%, I_{OL} = 2.0 mA			0.5			0.5	V
I_{OL}[6]	Low Level Output Current	V_{OL} = 0.5 V Max			64			64	mA
I_{OL}[7]		V_{OL} = 0.5 V Max			144			144	mA
I_{IH}	High Level Input Current[8]	V_{DDEXT} = 3.6 V, V_{IN} = 3.6 V			10			10	µA
I_{IH5V}	High Level Input Current[9]	V_{DDEXT} = 3.6 V, V_{IN} = 5.5 V			10			10	µA
I_{IL}	Low Level Input Current[2]	V_{DDEXT} = 3.6 V, V_{IN} = 0 V			10			10	µA
I_{IHP}	High Level Input Current JTAG[10]	V_{DDEXT} = 3.6 V, V_{IN} = 3.6 V			50			50	µA
I_{OZH}	Three-State Leakage Current[11]	V_{DDEXT} = 3.6 V, V_{IN} = 3.6 V			10			10	µA
I_{OZH5V}	Three-State Leakage Current[12]	V_{DDEXT} = 3.6 V, V_{IN} = 5.5 V			10			10	µA
I_{OZL}	Three-State Leakage Current[5]	V_{DDEXT} = 3.6 V, V_{IN} = 0 V			10			10	µA

Parameter		Test Conditions	300 MHz/400 MHz[1]			500 MHz/533 MHz/600 MHz[2]			Unit
			Min	Typ	Max	Min	Typ	Max	
C_{IN}	Input Capacitance[13, 14]	f_{IN} = 1 MHz, $T_{AMBIENT}$ = 25°C, V_{IN} = 2.5 V			8			8	pF
$I_{DD\text{-}IDLE}$	V_{DDINT} Current in Idle	V_{DDINT} = 1.0 V, f_{CCLK} = 50 MHz, T_J = 25°C, ASF = 0.43		14			24		mA
$I_{DD\text{-}TYP}$	V_{DDINT} Current	V_{DDINT} = 1.14 V, f_{CCLK} = 300 MHz, T_J = 25°C, ASF = 1.00		100			113		mA
$I_{DD\text{-}TYP}$	V_{DDINT} Current	V_{DDINT} = 1.14 V, f_{CCLK} = 400 MHz, T_J = 25°C, ASF = 1.00		125			138		mA
$I_{DDDEEPSLEEP}$[15]	V_{DDINT} Current in Deep Sleep Mode	V_{DDINT} = 1.0 V, f_{CCLK} = 0 MHz, T_J = 25°C, ASF = 0.00		6			16		mA
$I_{DDSLEEP}$	V_{DDINT} Current in Sleep Mode	V_{DDINT} = 1.0 V, f_{SCLK} = 25 MHz, T_J = 25°C		9.5			19.5		mA
$I_{DD\text{-}TYP}$	V_{DDINT} Current	V_{DDINT} = 1.20 V, f_{CCLK} = 533 MHz, T_J = 25°C, ASF = 1.00					185		mA
$I_{DD\text{-}TYP}$	V_{DDINT} Current	V_{DDINT} = 1.30 V, f_{CCLK} = 600 MHz, T_J = 25°C, ASF = 1.00					227		mA
$I_{DDHIBERNATE}$[15, 16]	V_{DDEXT} Current in Hibernate State	V_{DDEXT} = 3.60 V, CLKIN=0 MHz, T_J = maximum, with voltage regulator off (V_{DDINT} = 0 V)		50	100		50	100	µA
I_{DDRTC}	V_{DDRTC} Current	V_{DDRTC} = 3.3 V, T_J= 25°C		20			20		µA
$I_{DDDEEPSLEEP}$[15]	V_{DDINT} Current in Deep Sleep Mode	f_{CCLK} = 0 MHz, f_{SCLK} =0 MHz			Table 16			Table 15	mA
$I_{DDSLEEP}$[15, 17]	V_{DDINT} Current in Sleep Mode	f_{CCLK} = 0 MHz, f_{SCLK} > 0 MHz			$I_{DDDEEPSLEEP}$ + (0.14 × V_{DDINT} × f_{SCLK})			$I_{DDDEEPSLEEP}$ + (0.14 × V_{DDINT} × f_{SCLK})	mA
I_{DDINT}[18]	V_{DDINT} Current	f_{CCLK} > 0 MHz, f_{SCLK} > 0 MHz			$I_{DDSLEEP}$ + (Table 18 × ASF)			$I_{DDSLEEP}$ + (Table 18 × ASF)	mA

[1] Applies to all 300 MHz and 400 MHz speed grade models. See Ordering Guide on Page 68.
[2] Applies to all 500 MHz, 533 MHz, and 600 MHz speed grade models. See Ordering Guide on Page 68.
[3] Applies to all output and bidirectional pins except port F pins, port G pins, and port H pins.
[4] Applies to port F pins PF7–0.
[5] Applies to port F pins PF15–8, all port G pins, and all port H pins.
[6] Maximum combined current for Port F7–0.
[7] Maximum total current for all port F, port G, and port H pins.
[8] Applies to all input pins except PJ4.
[9] Applies to input pin PJ4 only.
[10] Applies to JTAG input pins (TCK, TDI, TMS, $\overline{TRST}$).
[11] Applies to three-statable pins.
[12] Applies to bidirectional pins PJ2 and PJ3.
[13] Applies to all signal pins.
[14] Guaranteed, but not tested.
[15] See the *ADSP-BF537 Blackfin Processor Hardware Reference Manual* for definition of sleep, deep sleep, and hibernate operating modes.
[16] CLKIN must be tied to V_{DDEXT} or GND during hibernate.
[17] In the equations, the f_{SCLK} parameter is the system clock in MHz.
[18] See Table 17 for the list of I_{DDINT} power vectors covered.

System designers should refer to *Estimating Power for the ADSP-BF534/BF536/BF537 Blackfin Processors (EE-297)*, which provides detailed information for optimizing designs for lowest power. All topics discussed in this section are described in detail in EE-297. Total power dissipation has two components:

1. Static, including leakage current
2. Dynamic, due to transistor switching characteristics

Many operating conditions can also affect power dissipation, including temperature, voltage, operating frequency, and processor activity. Electrical Characteristics on Page 26 shows the current dissipation for internal circuitry (V_{DDINT}). $I_{DDDEEPSLEEP}$ specifies static power dissipation as a function of voltage (V_{DDINT}) and temperature (see Table 16 or Table 15), and I_{DDINT} specifies the total power specification for the listed test conditions, including the dynamic component as a function of voltage (V_{DDINT}) and frequency (Table 18).

The dynamic component is also subject to an Activity Scaling Factor (ASF) which represents application code running on the processor (Table 17).

Table 15. Static Current–500 MHz, 533 MHz, and 600 MHz Speed Grade Devices (mA)[1]

	Voltage (V_{DDINT})													
T_J (°C)	0.80 V	0.85 V	0.90 V	0.95 V	1.00 V	1.05 V	1.10 V	1.15 V	1.20 V	1.25 V	1.30 V	1.32 V	1.375 V	1.43 V
–40	3.9	4.7	6.8	8.2	9.9	12.0	14.6	17.3	20.3	24.1	27.1	28.6	36.3	44.4
0	17.0	19.2	21.9	25.0	28.2	32.1	36.9	41.8	47.7	53.8	61.0	63.8	73.2	84.1
25	35.0	39.2	44.3	50.8	56.1	63.3	69.1	76.4	84.7	93.5	104.5	109.1	123.4	138.8
40	53.0	59.2	65.3	71.9	79.1	88.0	96.6	108.0	120.0	130.7	142.6	148.5	166.5	185.6
55	76.7	84.6	93.6	103.1	113.7	123.9	136.3	148.3	162.8	178.4	194.4	201.4	223.7	247.5
70	110.1	120.0	130.9	142.2	156.5	171.3	185.2	201.7	220.6	239.7	259.8	268.8	295.9	325.2
85	150.1	164.5	178.7	193.2	210.4	228.9	247.7	268.8	291.4	314.1	341.1	351.2	384.6	420.3
100	202.3	219.2	236.5	255.8	277.8	299.8	323.8	351.2	378.8	407.5	440.4	453.4	494.3	538.2
105	223.8	241.4	260.4	282.0	303.4	328.7	354.5	381.7	410.8	443.6	477.8	492.2	535.1	581.5

[1] Values are guaranteed maximum $I_{DDDEEPSLEEP}$ specifications.

Table 16. Static Current–300 MHz and 400 MHz Speed Grade Devices (mA)[1]

	Voltage (V_{DDINT})											
T_J (°C)	0.80 V	0.85 V	0.90 V	0.95 V	1.00 V	1.05 V	1.10 V	1.15 V	1.20 V	1.25 V	1.30 V	1.32 V
–40	2.6	3.2	3.7	4.5	5.5	6.6	7.9	9.3	10.5	12.5	13.9	14.8
0	6.6	7.8	8.4	9.9	10.9	12.3	13.8	15.5	17.5	19.6	21.7	23.1
25	12.2	13.5	14.8	16.4	18.2	19.9	22.7	25.6	28.4	31.8	35.7	37.2
40	17.2	19.0	20.6	22.9	25.9	28.2	31.6	34.9	38.9	42.9	47.6	49.5
55	25.7	27.8	30.9	33.7	37.3	41.4	44.8	50.0	54.8	59.4	66.1	68.4
70	37.6	41.3	44.8	48.9	53.9	58.6	63.9	69.7	76.9	84.0	92.2	94.9
85	53.7	58.3	63.7	69.0	75.9	82.9	90.5	98.4	106.4	115.3	124.6	128.1
100	75.1	82.3	88.5	95.8	104.0	112.5	121.8	130.6	141.3	153.2	164.8	169.7
105	84.5	91.2	98.2	106.0	114.2	123.0	132.4	143.3	155.0	167.4	179.8	185.4
115[2]	103.8	111.8	120.3	127.6	138.0	148.5	159.6	171.4	184.6	198.8	213.4	219.6
120[2]	115.5	123.6	132.2	141.9	152.3	163.7	175.6	189.3	202.8	217.7	232.3	238.6

[1] Values are guaranteed maximum $I_{DDDEEPSLEEP}$ specifications.
[2] Applies to automotive grade models only.

Table 17. Activity Scaling Factors

I_{DDINT} Power Vector[1]	Activity Scaling Factor (ASF)[2]
$I_{DD-PEAK}$	1.33
$I_{DD-HIGH}$	1.29
I_{DD-TYP}	1.00
I_{DD-APP}	0.88
I_{DD-NOP}	0.72
$I_{DD-IDLE}$	0.43

[1] See EE-297 for power vector definitions.
[2] All ASF values determined using a 10:1 CCLK:SCLK ratio.

Table 18. Dynamic Current (mA, with ASF = 1.0)[1]

Frequency (MHz)	Voltage (V_{DDINT})													
	0.80 V	0.85 V	0.90 V	0.95 V	1.00 V	1.05 V	1.10 V	1.15 V	1.20 V	1.25 V	1.30 V	1.32 V	1.375 V	1.43 V
50	11.0	13.7	19.13	18.2	18.67	19.13	19.6	21.2	24.1	25.5	28.5	28.6	28.85	29.2
100	27.9	22.7	30.8	28.4	29.3	30.8	32.9	35.3	37.8	40.6	43.5	43.7	44.1	45.8
200	36.9	42.6	55.0	49.2	51.5	55.0	58.3	62.9	67.0	69.7	73.0	74.0	75.7	80.7
300	N/A	61.5	79.2	70.4	74.6	79.2	84.4	90.7	94.3	99.1	103.9	105.5	108.0	113.4
400	N/A	N/A	N/A	92.4	97.2	104.3	109.8	116.5	121.9	128.0	134.6	136.6	139.8	145.1
500	N/A	N/A	N/A	N/A	N/A	N/A	N/A	142.3	149.3	157.5	164.7	166.7	169.8	176.9
533	N/A	N/A	N/A	N/A	N/A	N/A	N/A	N/A	158.6	167.0	174.3	176.6	180.1	187.9
600	N/A	N/A	N/A	N/A	N/A	N/A	N/A	N/A	N/A	N/A	193.7	196.5	200.7	210.0

[1] The values are not guaranteed as stand-alone maximum specifications, they must be combined with static current per the equations of Electrical Characteristics on Page 26.

ABSOLUTE MAXIMUM RATINGS

Stresses greater than those listed in Table 19 may cause permanent damage to the device. These are stress ratings only. Functional operation of the device at these or any other conditions greater than those indicated in the operational sections of this specification is not implied. Exposure to absolute maximum rating conditions for extended periods may affect device reliability.

Table 19. Absolute Maximum Ratings

Parameter	Rating
Internal (Core) Supply Voltage (V_{DDINT})	−0.3 V to +1.43 V
External (I/O) Supply Voltage (V_{DDEXT})	−0.3 V to +3.8 V
Input Voltage[1]	−0.5 V to +3.6 V
Input Voltage[1, 2]	−0.5 V to +5.5 V
Output Voltage Swing	−0.5 V to V_{DDEXT} + 0.5 V
Storage Temperature Range	−65°C to +150°C
Junction Temperature While Biased	+125°C

[1] Applies only when V_{DDEXT} is within specifications. When V_{DDEXT} is outside specifications, the range is V_{DDEXT} ± 0.2 V.
[2] Applies to 5 V tolerant pins SCL, SDA, and PJ4. For duty cycles, see Table 20.

Table 20. Maximum Duty Cycle for Input[1] Transient Voltage

V_{IN} Min (V)[2]	V_{IN} Max (V)[2]	Maximum Duty Cycle[3]
−0.50	+3.80	100%
−0.70	+4.00	40%
−0.80	+4.10	25%
−0.90	+4.20	15%
−1.00	+4.30	10%

[1] Applies to all signal pins with the exception of CLKIN, XTAL, and VROUT1–0.
[2] The individual values cannot be combined for analysis of a single instance of overshoot or undershoot. The worst case observed value must fall within one of the voltages specified and the total duration of the overshoot or undershoot (exceeding the 100% case) must be less than or equal to the corresponding duty cycle.
[3] Duty cycle refers to the percentage of time the signal exceeds the value for the 100% case. This is equivalent to the measured duration of a single instance of overshoot or undershoot as a percentage of the period of occurrence.

ESD SENSITIVITY

ESD (electrostatic discharge) sensitive device.
Charged devices and circuit boards can discharge without detection. Although this product features patented or proprietary protection circuitry, damage may occur on devices subjected to high energy ESD. Therefore, proper ESD precautions should be taken to avoid performance degradation or loss of functionality.

PACKAGE INFORMATION

The information presented in Figure 8 and Table 21 provide details about the package branding for the Blackfin processors. For a complete listing of product availability, see Ordering Guide on Page 68.

Figure 8. Product Information on Package

Table 21. Package Brand Information[1]

Brand Key	Field Description
t	Temperature Range
pp	Package Type
Z	RoHS Compliant Designation
ccc	See Ordering Guide
vvvvvv.x	Assembly Lot Code
n.n	Silicon Revision
#	RoHS Compliant Designation
yyww	Date Code

[1] Nonautomotive only. For branding information specific to Automotive products, contact Analog Devices Inc.

TIMING SPECIFICATIONS

Component specifications are subject to change without notice.

Clock and Reset Timing

Table 22. Clock Input and Reset Timing

Parameter		Min	Max	Unit
Timing Requirements				
t_{CKIN}	CLKIN Period[1, 2, 3, 4]	20.0	100.0	ns
t_{CKINL}	CLKIN Low Pulse	8.0		ns
t_{CKINH}	CLKIN High Pulse	8.0		ns
$t_{BUFDLAY}$	CLKIN to CLKBUF Delay		10	ns
t_{WRST}	$\overline{\text{RESET}}$ Asserted Pulse Width Low	$11 \times t_{CKIN}$		ns
t_{NOBOOT}	$\overline{\text{RESET}}$ Deassertion to First External Access Delay[5]	$3 \times t_{CKIN}$	$5 \times t_{CKIN}$	ns

[1] Combinations of the CLKIN frequency and the PLL clock multiplier must not exceed the allowed f_{VCO}, f_{CCLK}, and f_{SCLK} settings discussed in Table 10 through Table 14. Since by default the PLL is multiplying the CLKIN frequency by 10, 300 MHz and 400 MHz speed grade parts can not use the full CLKIN period range.
[2] Applies to PLL bypass mode and PLL non bypass mode.
[3] CLKIN frequency must not change on the fly.
[4] If the DF bit in the PLL_CTL register is set, then the maximum t_{CKIN} period is 50 ns.
[5] Applies when processor is configured in No Boot Mode (BMODE2-0 = b#000).

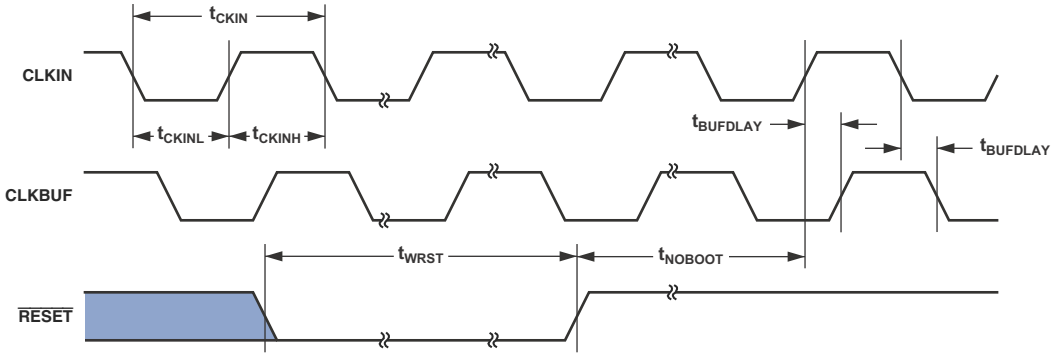

Figure 9. Clock and Reset Timing

Table 23. Power-Up Reset Timing

Parameter		Min	Max	Unit
Timing Requirements				
$t_{RST_IN_PWR}$	$\overline{\text{RESET}}$ Deasserted After the V_{DDINT}, V_{DDEXT}, V_{DDRTC}, and CLKIN Pins Are Stable and Within Specification	$3500 \times t_{CKIN}$		ns

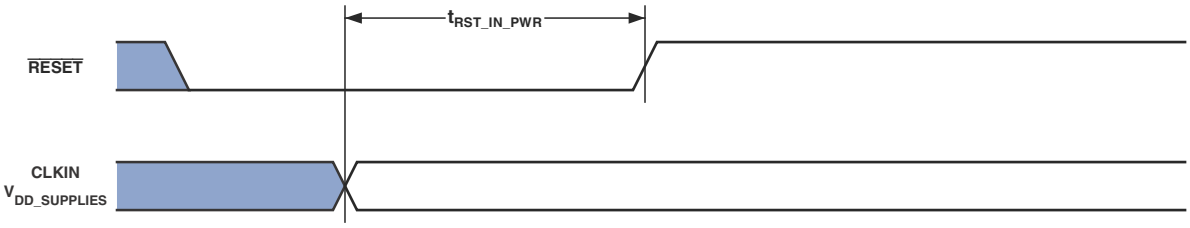

In Figure 10, $V_{DD_SUPPLIES}$ is V_{DDINT}, V_{DDEXT}, V_{DDRTC}

Figure 10. Power-Up Reset Timing

Asynchronous Memory Read Cycle Timing

Table 24. Asynchronous Memory Read Cycle Timing

Parameter		Min	Max	Unit
Timing Requirements				
t_{SDAT}	DATA15–0 Setup Before CLKOUT	2.1		ns
t_{HDAT}	DATA15–0 Hold After CLKOUT	0.8		ns
t_{SARDY}	ARDY Setup Before CLKOUT	4.0		ns
t_{HARDY}	ARDY Hold After CLKOUT	0.0		ns
Switching Characteristics				
t_{DO}	Output Delay After CLKOUT[1]		6.0	ns
t_{HO}	Output Hold After CLKOUT [1]	0.8		ns

[1] Output pins include $\overline{AMS3–0}$, $\overline{ABE1–0}$, ADDR19–1, $\overline{AOE}$, $\overline{ARE}$.

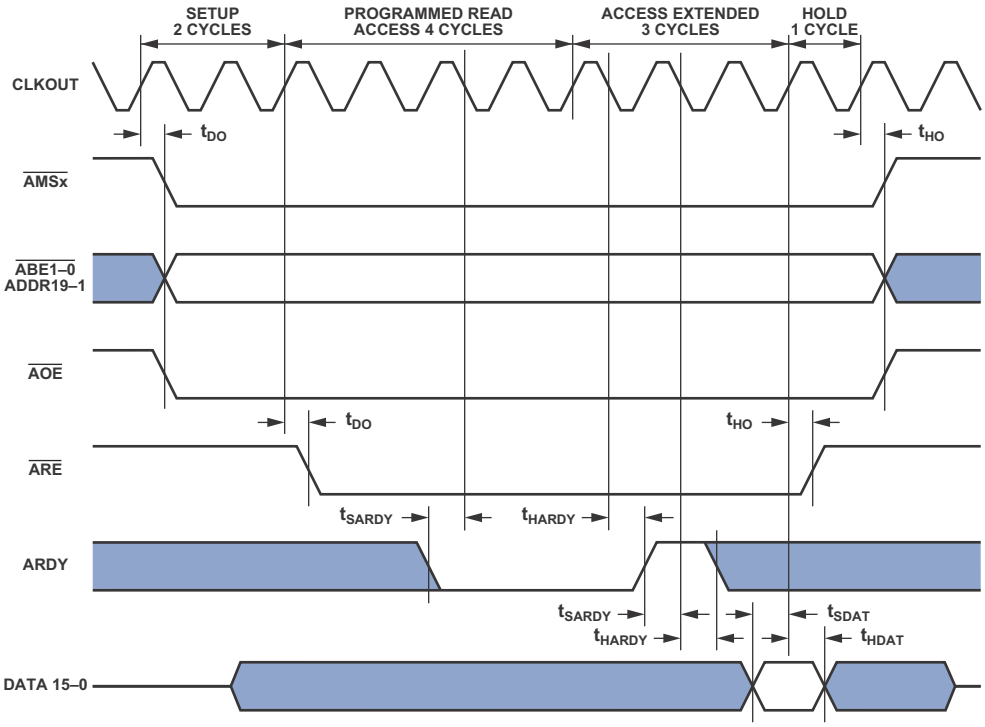

Figure 11. Asynchronous Memory Read Cycle Timing

Asynchronous Memory Write Cycle Timing

Table 25. Asynchronous Memory Write Cycle Timing

Parameter		Min	Max	Unit
Timing Requirements				
t_{SARDY}	ARDY Setup Before CLKOUT	4.0		ns
t_{HARDY}	ARDY Hold After CLKOUT	0.0		ns
Switching Characteristics				
t_{DDAT}	DATA15–0 Disable After CLKOUT		6.0	ns
t_{ENDAT}	DATA15–0 Enable After CLKOUT	1.0		ns
t_{DO}	Output Delay After CLKOUT[1]		6.0	ns
t_{HO}	Output Hold After CLKOUT [1]	0.8		ns

[1] Output pins include $\overline{AMS3-0}$, $\overline{ABE1-0}$, ADDR19–1, $\overline{AOE}$, $\overline{AWE}$.

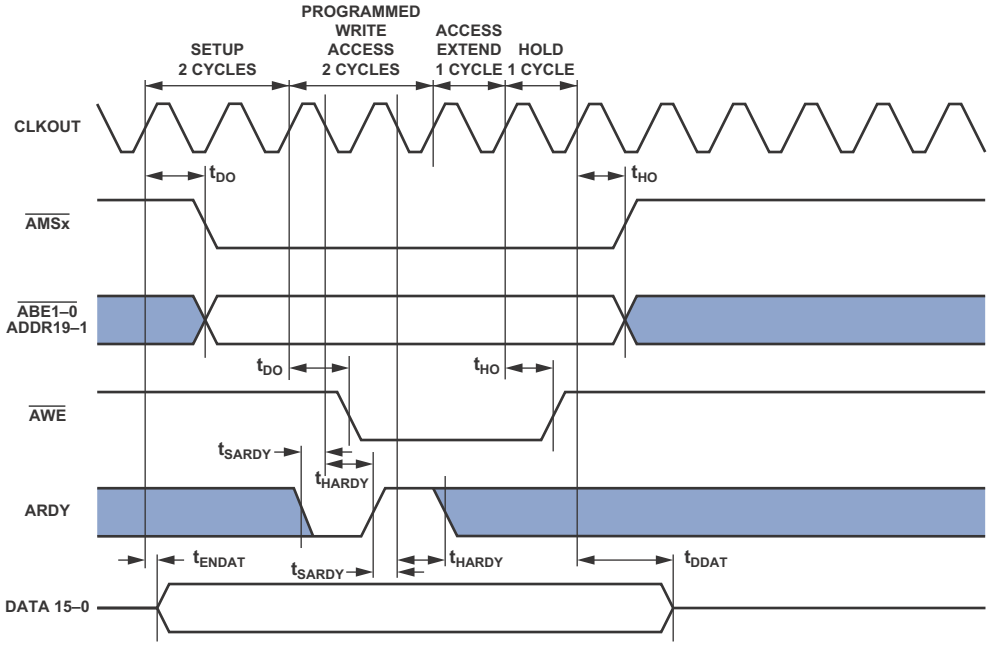

Figure 12. Asynchronous Memory Write Cycle Timing

External Port Bus Request and Grant Cycle Timing

Table 26 and Figure 13 describe external port bus request and bus grant operations.

Table 26. External Port Bus Request and Grant Cycle Timing

Parameter[1, 2]		Min	Max	Unit
Timing Requirements				
t_{BS}	$\overline{BR}$ Asserted to CLKOUT Low Setup	4.6		ns
t_{BH}	CLKOUT Low to $\overline{BR}$ Deasserted Hold Time	0.0		ns
Switching Characteristics				
t_{SD}	CLKOUT Low to $\overline{AMSx}$, Address, and $\overline{ARE}$/$\overline{AWE}$ Disable		4.5	ns
t_{SE}	CLKOUT Low to $\overline{AMSx}$, Address, and $\overline{ARE}$/$\overline{AWE}$ Enable		4.5	ns
t_{DBG}	CLKOUT High to $\overline{BG}$ Asserted Setup		3.6	ns
t_{EBG}	CLKOUT High to $\overline{BG}$ Deasserted Hold Time		3.6	ns
t_{DBH}	CLKOUT High to $\overline{BGH}$ Asserted Setup		3.6	ns
t_{EBH}	CLKOUT High to $\overline{BGH}$ Deasserted Hold Time		3.6	ns

[1] These timing parameters are based on worst-case operating conditions.
[2] The pad loads for these timing parameters are 20 pF.

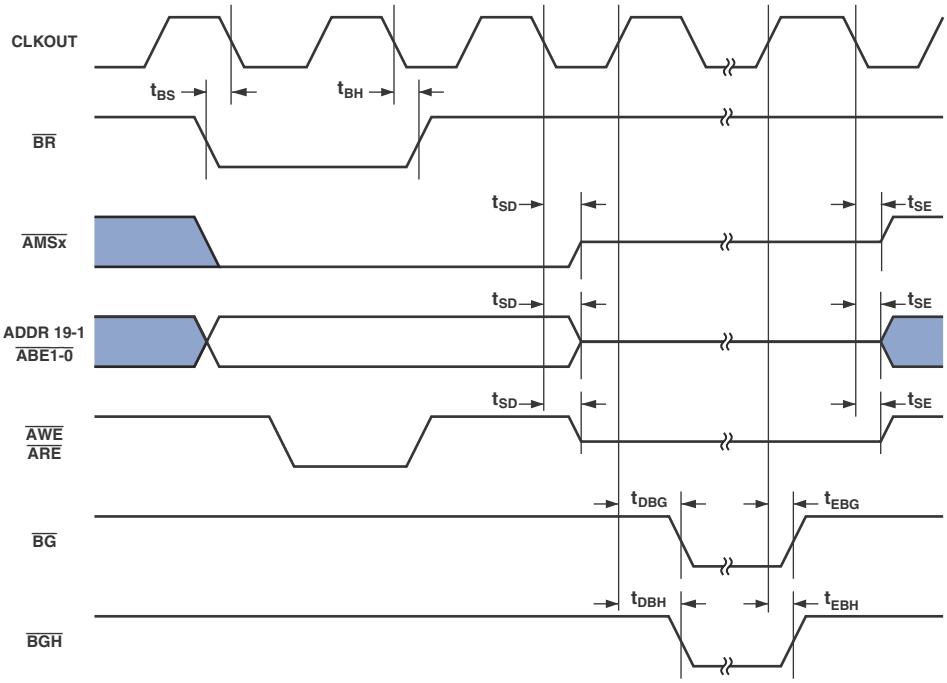

Figure 13. External Port Bus Request and Grant Cycle Timing

SDRAM Interface Timing

Table 27. SDRAM Interface Timing

Parameter		Min	Max	Unit
Timing Requirements				
t_{SSDAT}	DATA15–0 Setup Before CLKOUT	1.5		ns
t_{HSDAT}	DATA15–0 Hold After CLKOUT	0.8		ns
Switching Characteristics				
t_{DCAD}	COMMAND[1], ADDR19–1, DATA15–0 Delay After CLKOUT		4.0	ns
t_{HCAD}	COMMAND[1], ADDR19–1, DATA15–0 Hold After CLKOUT	1.0		ns
t_{DSDAT}	DATA15–0 Disable After CLKOUT		6.0	ns
t_{ENSDAT}	DATA15–0 Enable After CLKOUT	0.5		ns
t_{SCLK}[2]	CLKOUT Period when $T_J \leq +105°C$	7.5		ns
t_{SCLK}[2]	CLKOUT Period when $T_J > +105°C$	10		ns
t_{SCLKH}	CLKOUT Width High	2.5		ns
t_{SCLKL}	CLKOUT Width Low	2.5		ns

[1] Command pins include: $\overline{SRAS}$, $\overline{SCAS}$, $\overline{SWE}$, SDQM, $\overline{SMS}$, SA10, SCKE.
[2] These limits are specific to the SDRAM interface only. In addition, CLKOUT must always comply with the limits in Table 14 on Page 25.

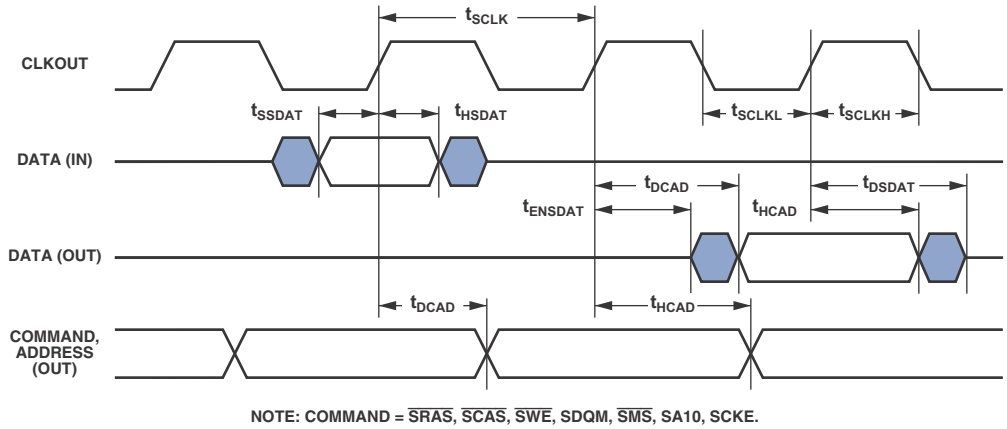

Figure 14. SDRAM Interface Timing

External DMA Request Timing

Table 28 and Figure 15 describe the external DMA request operations.

Table 28. External DMA Request Timing

Parameter		Min	Max	Unit
Timing Requirements				
t_{DR}	DMARx Asserted to CLKOUT High Setup	6.0		ns
t_{DH}	CLKOUT High to DMARx Deasserted Hold Time	0.0		ns
$t_{DMARACT}$	DMARx Active Pulse Width	$1.0 \times t_{SCLK}$		ns
$t_{DMARINACT}$	DMARx Inactive Pulse Width	$1.75 \times t_{SCLK}$		ns

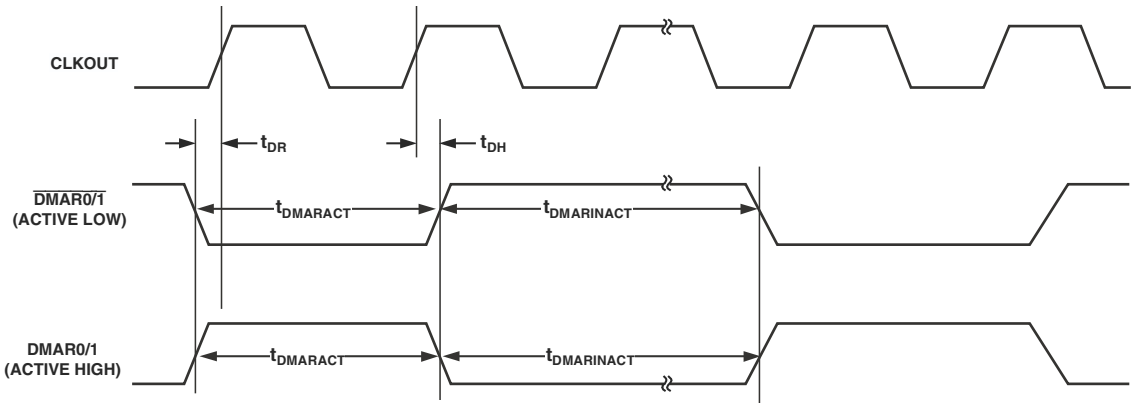

Figure 15. External DMA Request Timing

Parallel Peripheral Interface Timing

Table 29 and Figure 16 on Page 37, Figure 20 on Page 40, and Figure 23 on Page 42 describe parallel peripheral interface operations.

Table 29. Parallel Peripheral Interface Timing

Parameter		Min	Max	Unit
Timing Requirements				
t_{PCLKW}	PPI_CLK Width[1]	6.0		ns
t_{PCLK}	PPI_CLK Period[1]	15.0		ns
Timing Requirements—GP Input and Frame Capture Modes				
t_{SFSPE}	External Frame Sync Setup Before PPI_CLK	6.7		ns
t_{HFSPE}	External Frame Sync Hold After PPI_CLK	1.0		ns
t_{SDRPE}	Receive Data Setup Before PPI_CLK	3.5		ns
t_{HDRPE}	Receive Data Hold After PPI_CLK	1.5		ns
Switching Characteristics—GP Output and Frame Capture Modes				
t_{DFSPE}	Internal Frame Sync Delay After PPI_CLK		8.0	ns
t_{HOFSPE}	Internal Frame Sync Hold After PPI_CLK	1.7		ns
t_{DDTPE}	Transmit Data Delay After PPI_CLK		8.0	ns
t_{HDTPE}	Transmit Data Hold After PPI_CLK	1.8		ns

[1] PPI_CLK frequency cannot exceed $f_{SCLK}/2$.

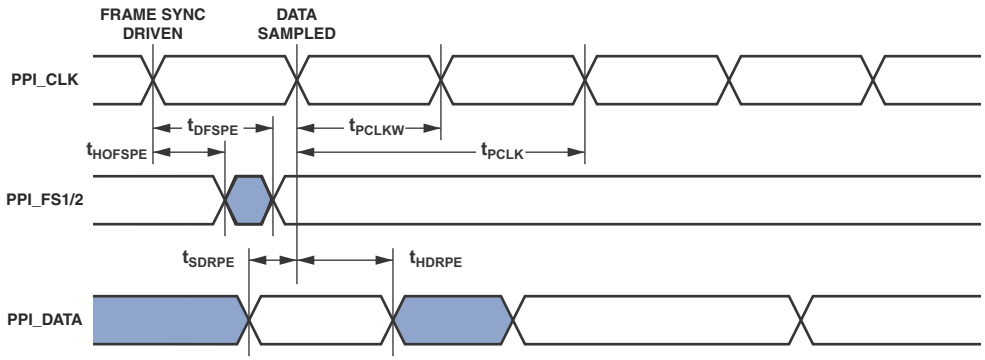

Figure 16. PPI GP Rx Mode with Internal Frame Sync Timing

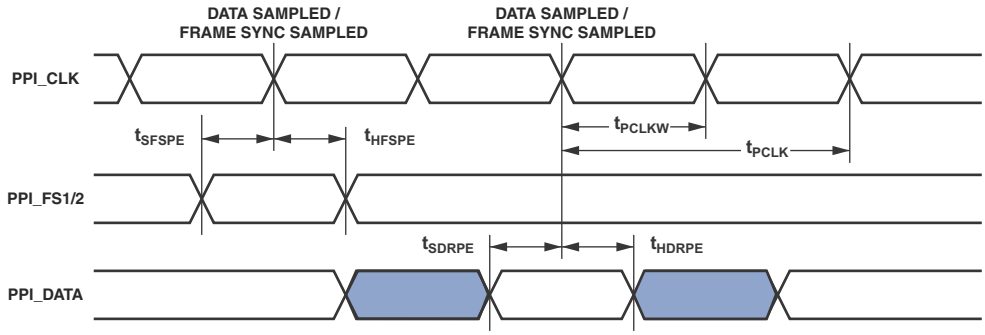

Figure 17. PPI GP Rx Mode with External Frame Sync Timing

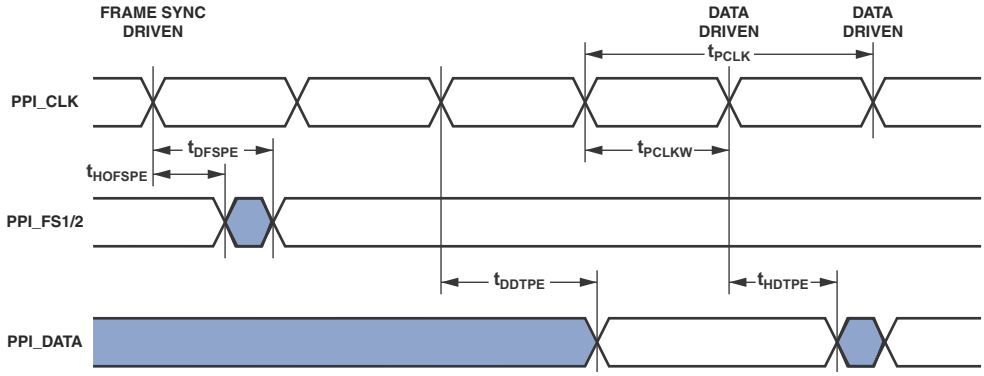

Figure 18. PPI GP Tx Mode with Internal Frame Sync Timing

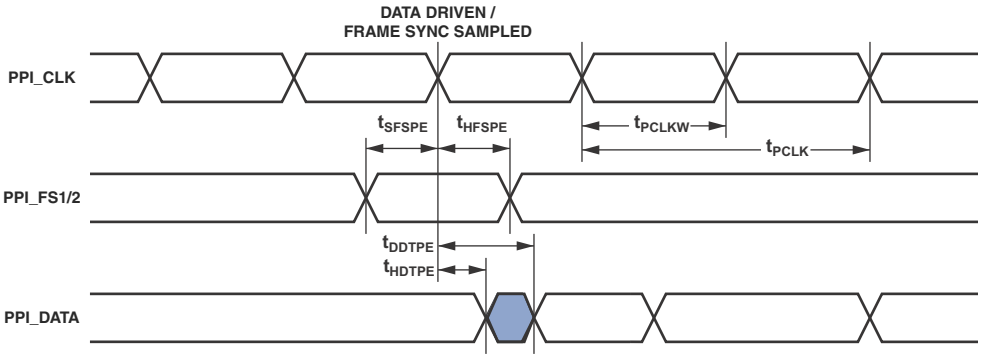

Figure 19. PPI GP Tx Mode with External Frame Sync Timing

Serial Port Timing

Table 30 through Table 33 on Page 42 and Figure 20 on Page 40 through Figure 23 on Page 42 describe serial port operations.

Table 30. Serial Ports—External Clock

Parameter		Min	Max	Unit
Timing Requirements				
t_{SFSE}	TFSx/RFSx Setup Before TSCLKx/RSCLKx[1]	3.0		ns
t_{HFSE}	TFSx/RFSx Hold After TSCLKx/RSCLKx[1]	3.0		ns
t_{SDRE}	Receive Data Setup Before RSCLKx[1]	3.0		ns
t_{SCLKEW}	TSCLKx/RSCLKx Width	4.5		4.5
t_{SCLKE}	TSCLKx/RSCLKx Period	15.0		15.0
t_{SUDTE}	Start-Up Delay From SPORT Enable To First External TFSx[2]	$4.0 \times t_{SCLKE}$		ns
t_{SUDRE}	Start-Up Delay From SPORT Enable To First External RFSx[2]	$4.0 \times t_{SCLKE}$		ns
Switching Characteristics				
t_{DFSE}	TFSx/RFSx Delay After TSCLKx/RSCLK (Internally Generated TFSx/RFSx)[3]		10.0	ns
t_{HOFSE}	TFSx/RFSx Hold After TSCLKx/RSCLK (Internally Generated TFSx/RFSx)[2]	0		ns
t_{DDTE}	Transmit Data Delay After TSCLKx[2]		10.0	ns
t_{HDTE}	Transmit Data Hold After TSCLKx[2]	0		ns

[1] Referenced to sample edge.
[2] Verified in design but untested. After being enabled, the serial port requires external clock pulses—before the first external frame sync edge—to initialize the serial port.
[3] Referenced to drive edge.

Table 31. Serial Ports—Internal Clock

		$2.25\ V \le V_{DDEXT} < 2.70\ V$ or $0.80\ V \le V_{DDINT} < 0.95\ V$[1]		$2.70\ V \le V_{DDEXT} \le 3.60\ V$ and $0.95\ V \le V_{DDINT} \le 1.43\ V$[2, 3]		
Parameter		**Min**	**Max**	**Min**	**Max**	**Unit**
Timing Requirements						
t_{SFSI}	TFSx/RFSx Setup Before TSCLKx/RSCLKx[4]	8.5		8.0		ns
t_{HFSI}	TFSx/RFSx Hold After TSCLKx/RSCLKx[4]	−1.5		−1.5		ns
t_{SDRI}	Receive Data Setup Before RSCLKx[4]	8.5		8.0		ns
t_{HDRI}	Receive Data Hold After RSCLKx[4]	−1.5		−1.5		ns
Switching Characteristics						
t_{DFSI}	TFSx/RFSx Delay After TSCLKx/RSCLKx (Internally Generated TFSx/RFSx)[5]		3.0		3.0	ns
t_{HOFSI}	TFSx/RFSx Hold After TSCLKx/RSCLKx (Internally Generated TFSx/RFSx)[5]	−1.0		−1.0		ns
t_{DDTI}	Transmit Data Delay After TSCLKx[5]		3.0		3.0	ns
t_{HDTI}	Transmit Data Hold After TSCLKx[5]	−1.0		−1.0		ns
t_{SCLKIW}	TSCLKx/RSCLKx Width	4.5		4.5		ns

[1] Applies to all nonautomotive-grade devices when operated within either of these voltage ranges.
[2] Applies to all nonautomotive-grade devices when operated within these voltage ranges.
[3] All automotive-grade devices are within these specifications.
[4] Referenced to sample edge.
[5] Referenced to drive edge.

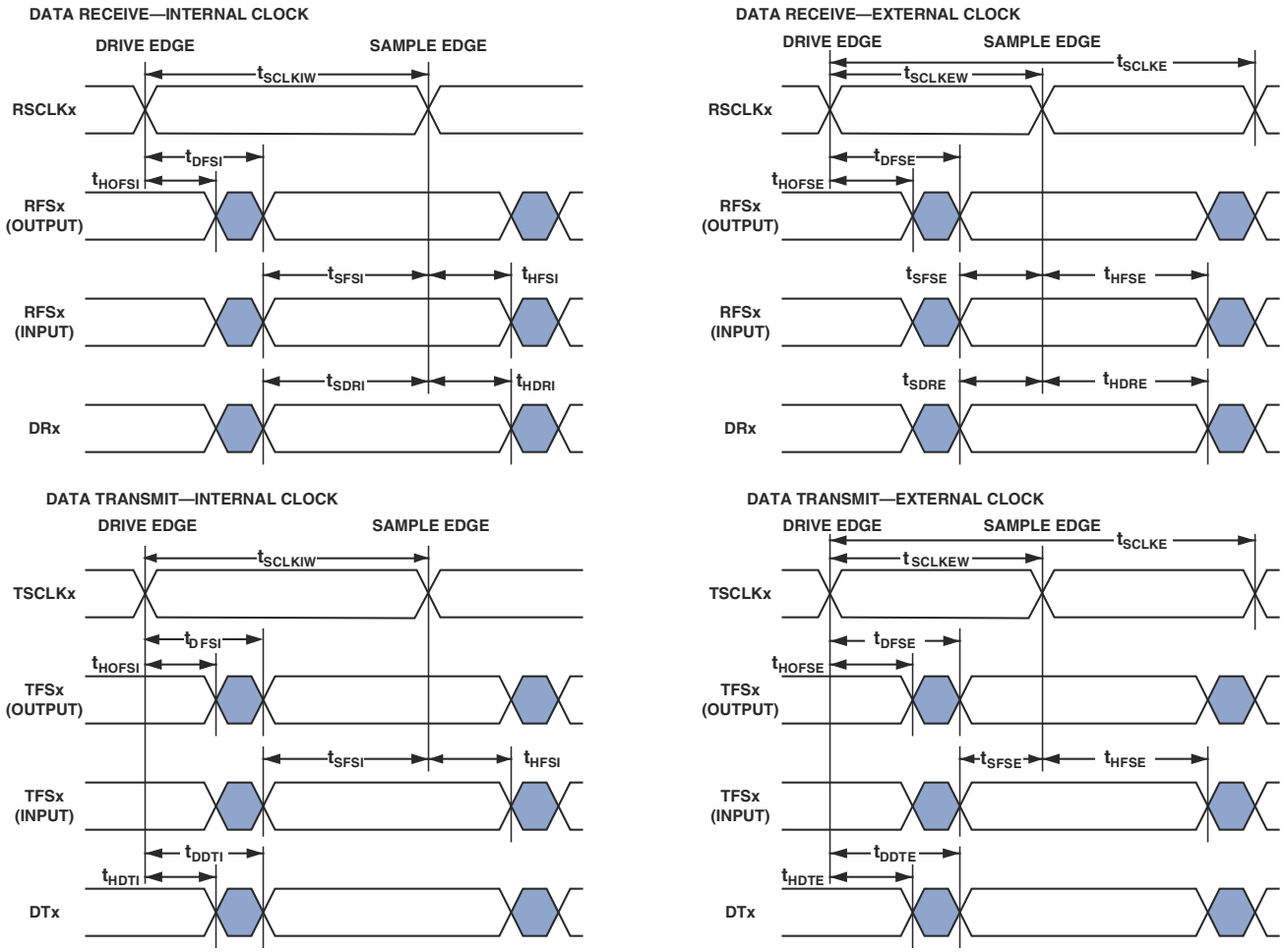

Figure 20. Serial Ports

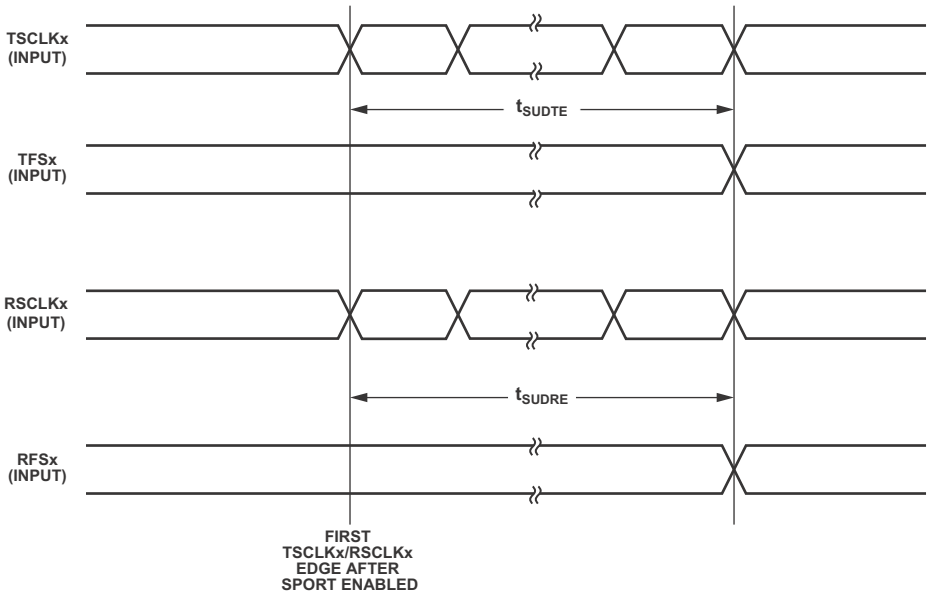

Figure 21. Serial Port Start Up with External Clock and Frame Sync

Table 32. Serial Ports—Enable and Three-State

Parameter		Min	Max	Unit
Switching Characteristics				
t_{DTENE}	Data Enable Delay from External TSCLKx[1]	0		ns
t_{DDTTE}	Data Disable Delay from External TSCLKx[1]		10.0	ns
t_{DTENI}	Data Enable Delay from Internal TSCLKx[1]	–2.0		ns
t_{DDTTI}	Data Disable Delay from Internal TSCLKx[1]		3.0	ns

[1] Referenced to drive edge.

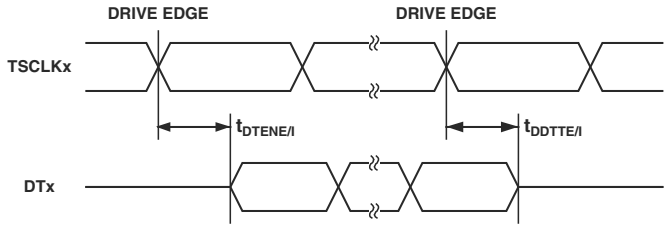

Figure 22. Enable and Three-State

Table 33. External Late Frame Sync

Parameter		Min	Max	Unit
Switching Characteristics				
$t_{DDTLFSE}$	Data Delay from Late External TFSx or External RFSx with MCMEN = 1, MFD = 0[1, 2]		10.0	ns
$t_{DTENLFS}$	Data Enable from Late FS or MCMEN = 1, MFD = 0[1, 2]	0		ns

[1] MCMEN = 1, TFSx enable and TFSx valid follow $t_{DDTENFS}$ and t_{DDTLFS}.
[2] If external RFSx/TFSx setup to RSCLKx/TSCLKx > $t_{SCLKE}/2$, then $t_{DDTE/I}$ and $t_{DTENE/I}$ apply, otherwise $t_{DDTLFSE}$ and $t_{DTENLFS}$ apply.

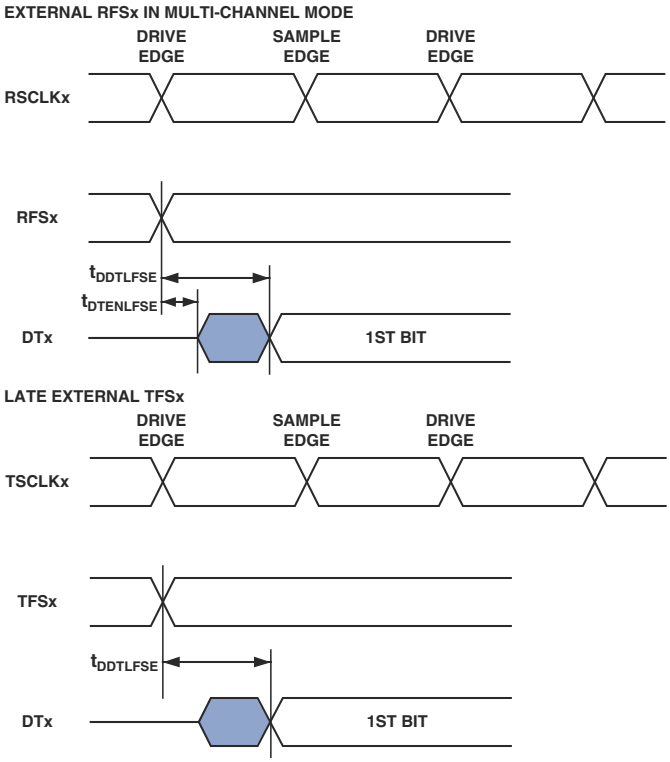

Figure 23. External Late Frame Sync

Serial Peripheral Interface Port—Master Timing

Table 34 and Figure 24 describe SPI port master operations.

Table 34. Serial Peripheral Interface (SPI) Port—Master Timing

Parameter		2.25 V ≤ V_{DDEXT} < 2.70 V or 0.80 V ≤ V_{DDINT} < 0.95 V[1] Min	Max	2.70 V ≤ V_{DDEXT} ≤ 3.60 V and 0.95 V ≤ V_{DDINT} ≤ 1.43 V[2, 3] Min	Max	Unit
Timing Requirements						
t_{SSPIDM}	Data Input Valid to SCK Edge (Data Input Setup)	8.7		7.5		ns
t_{HSPIDM}	SCK Sampling Edge to Data Input Invalid	−1.5		−1.5		ns
Switching Characteristics						
t_{SDSCIM}	$\overline{SPISELx}$ Low to First SCK Edge	2 × t_{SCLK} − 1.5		2 × t_{SCLK} − 1.5		ns
t_{SPICHM}	Serial Clock High Period	2 × t_{SCLK} − 1.5		2 × t_{SCLK} − 1.5		ns
t_{SPICLM}	Serial Clock Low Period	2 × t_{SCLK} − 1.5		2 × t_{SCLK} − 1.5		ns
t_{SPICLK}	Serial Clock Period	4 × t_{SCLK} − 1.5		4 × t_{SCLK} − 1.5		ns
t_{HDSM}	Last SCK Edge to $\overline{SPISELx}$ High	2 × t_{SCLK} − 1.5		2 × t_{SCLK} − 1.5		ns
t_{SPITDM}	Sequential Transfer Delay	2 × t_{SCLK} − 1.5		2 × t_{SCLK} − 1.5		ns
$t_{DDSPIDM}$	SCK Edge to Data Out Valid (Data Out Delay)		6		6	ns
$t_{HDSPIDM}$	SCK Edge to Data Out Invalid (Data Out Hold)	−1.0		−1.0		ns

[1] Applies to all nonautomotive-grade devices when operated within either of these voltage ranges.
[2] Applies to all nonautomotive-grade devices when operated within these voltage ranges.
[3] All automotive-grade devices are within these specifications.

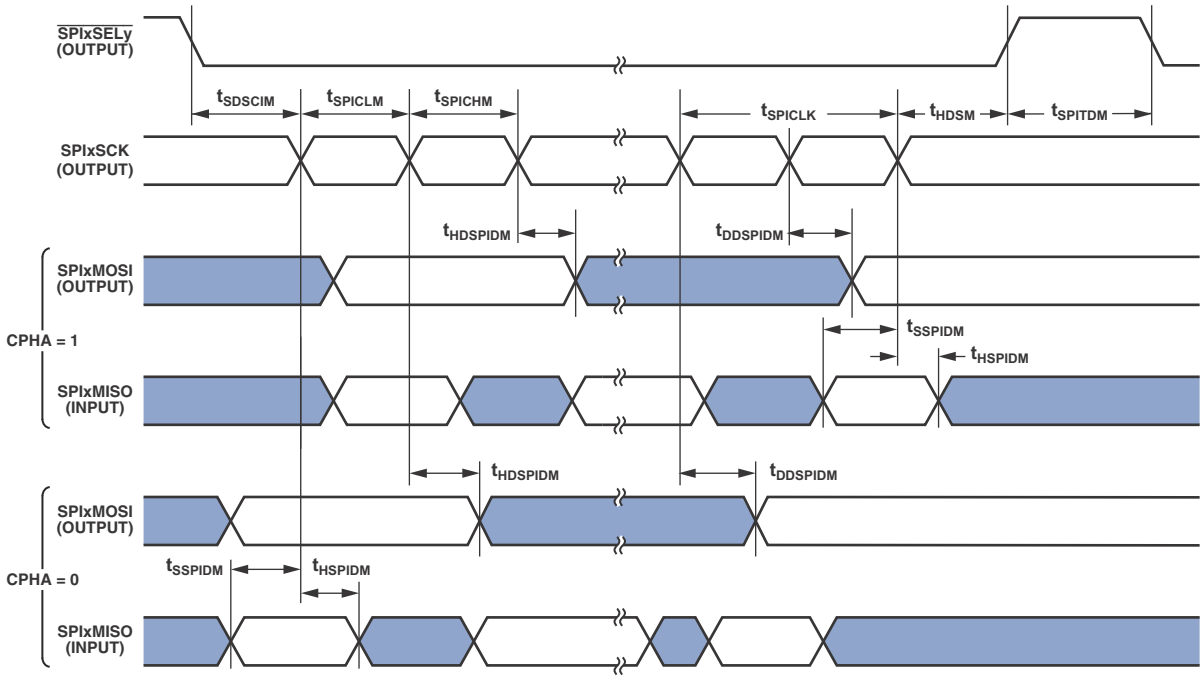

Figure 24. Serial Peripheral Interface (SPI) Port—Master Timing

Serial Peripheral Interface Port—Slave Timing

Table 35 and Figure 25 describe SPI port slave operations.

Table 35. Serial Peripheral Interface (SPI) Port—Slave Timing

Parameter		Min	Max	Unit
Timing Requirements				
t_{SPICHS}	Serial Clock High Period	$2 \times t_{SCLK} - 1.5$		ns
t_{SPICLS}	Serial Clock Low Period	$2 \times t_{SCLK} - 1.5$		ns
t_{SPICLK}	Serial Clock Period	$4 \times t_{SCLK}$		ns
t_{HDS}	Last SCK Edge to $\overline{SPISS}$ Not Asserted	$2 \times t_{SCLK} - 1.5$		ns
t_{SPITDS}	Sequential Transfer Delay	$2 \times t_{SCLK} - 1.5$		ns
t_{SDSCI}	$\overline{SPISS}$ Assertion to First SCK Edge	$2 \times t_{SCLK} - 1.5$		ns
t_{SSPID}	Data Input Valid to SCK Edge (Data Input Setup)	1.6		ns
t_{HSPID}	SCK Sampling Edge to Data Input Invalid	1.6		ns
Switching Characteristics				
t_{DSOE}	$\overline{SPISS}$ Assertion to Data Out Active	0	8	ns
t_{DSDHI}	$\overline{SPISS}$ Deassertion to Data High Impedance	0	8	ns
t_{DDSPID}	SCK Edge to Data Out Valid (Data Out Delay)		10	ns
t_{HDSPID}	SCK Edge to Data Out Invalid (Data Out Hold)	0		ns

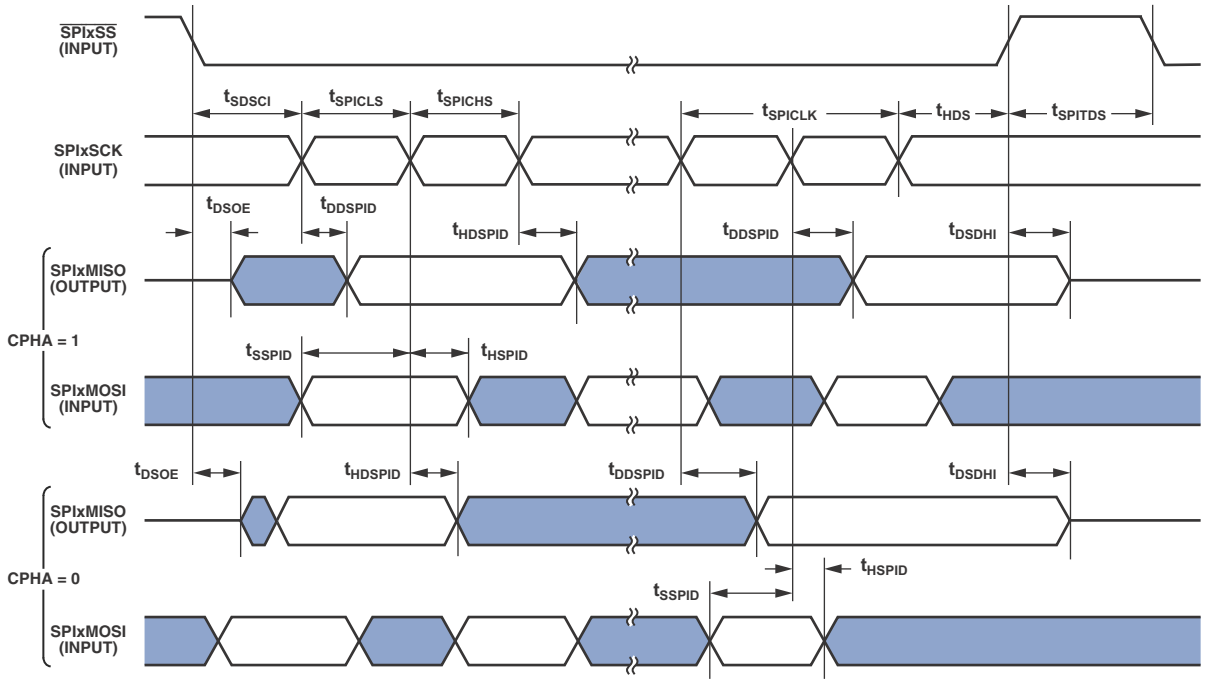

Figure 25. Serial Peripheral Interface (SPI) Port—Slave Timing

General-Purpose Port Timing

Table 36 and Figure 26 describe general-purpose port operations.

Table 36. General-Purpose Port Timing

Parameter		Min	Max	Unit
Timing Requirement				
t_{WFI}	General-Purpose Port Pin Input Pulse Width	t_{SCLK} + 1		ns
Switching Characteristic				
t_{GPOD}	General-Purpose Port Pin Output Delay from CLKOUT Low	0	6	ns

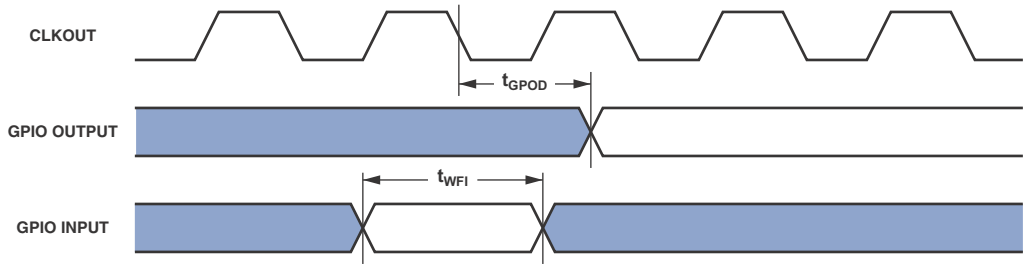

Figure 26. General-Purpose Port Timing

Universal Asynchronous Receiver-Transmitter (UART) Ports—Receive and Transmit Timing

For information on the UART port receive and transmit operations, see the *ADSP-BF537 Blackfin Processor Hardware Reference*.

Timer Clock Timing

Table 37 and Figure 27 describe timer clock timing.

Table 37. Timer Clock Timing

Parameter		Min	Max	Unit
Switching Characteristic				
t_{TODP}	Timer Output Update Delay After PPI_CLK High		12	ns

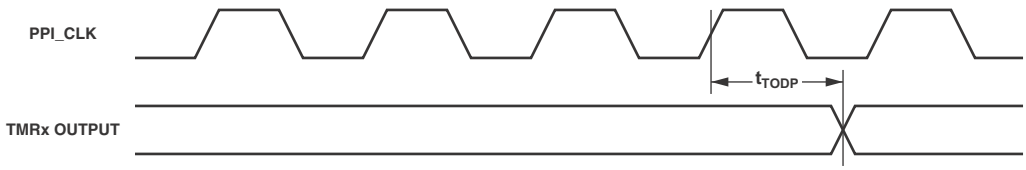

Figure 27. Timer Clock Timing

Timer Cycle Timing

Table 38 and Figure 28 describe timer expired operations. The input signal is asynchronous in "width capture mode" and "external clock mode" and has an absolute maximum input frequency of (f_{SCLK}/2) MHz.

Table 38. Timer Cycle Timing

Parameter		2.25 V ≤ V_{DDEXT} < 2.70 V or 0.80 V ≤ V_{DDINT} < 0.95 V[1] Min	Max	2.70 V ≤ V_{DDEXT} ≤ 3.60 V and 0.95 V ≤ V_{DDINT} ≤ 1.43 V[2, 3] Min	Max	Unit
Timing Characteristics						
t_{WL}	Timer Pulse Width Input Low (Measured In SCLK Cycles)[4]	1 × t_{SCLK}		1 × t_{SCLK}		ns
t_{WH}	Timer Pulse Width Input High (Measured In SCLK Cycles)[4]	1 × t_{SCLK}		1 × t_{SCLK}		ns
t_{TIS}	Timer Input Setup Time Before CLKOUT Low[5]	5.5		5.0		ns
t_{TIH}	Timer Input Hold Time After CLKOUT Low[5]	1.5		1.5		ns
Switching Characteristics						
t_{HTO}	Timer Pulse Width Output (Measured In SCLK Cycles)	1 × t_{SCLK}	$(2^{32}-1) \times t_{SCLK}$	1 × t_{SCLK}	$(2^{32}-1) \times t_{SCLK}$	ns
t_{TOD}	Timer Output Update Delay After CLKOUT High		6.5		6.0	ns

[1] Applies to all nonautomotive-grade devices when operated within either of these voltage ranges.
[2] Applies to all nonautomotive-grade devices when operated within these voltage ranges.
[3] All automotive-grade devices are within these specifications.
[4] The minimum pulse widths apply for TMRx signals in width capture and external clock modes. They also apply to the PF15 or PPI_CLK signals in PWM output mode.
[5] Either a valid setup and hold time or a valid pulse width is sufficient. There is no need to resynchronize programmable flag inputs.

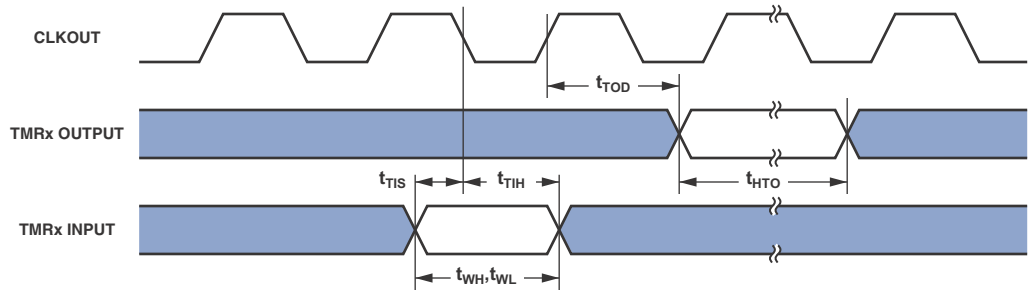

Figure 28. Timer Cycle Timing

JTAG Test and Emulation Port Timing

Table 39 and Figure 29 describe JTAG port operations.

Table 39. JTAG Port Timing

Parameter		Min	Max	Unit
Timing Parameters				
t_{TCK}	TCK Period	20		ns
t_{STAP}	TDI, TMS Setup Before TCK High	4		ns
t_{HTAP}	TDI, TMS Hold After TCK High	4		ns
t_{SSYS}	System Inputs Setup Before TCK High[1]	4		ns
t_{HSYS}	System Inputs Hold After TCK High[1]	5		ns
t_{TRSTW}	$\overline{TRST}$ Pulse Width[2] (Measured in TCK Cycles)	4		TCK
Switching Characteristics				
t_{DTDO}	TDO Delay From TCK Low		10	ns
t_{DSYS}	System Outputs Delay After TCK Low[3]	0	12	ns

[1] System Inputs = DATA15–0, $\overline{BR}$, ARDY, SCL, SDA, TFS0, TSCLK0, RSCLK0, RFS0, DR0PRI, DR0SEC, PF15–0, PG15–0, PH15–0, MDIO, TCK, $\overline{TRST}$, $\overline{RESET}$, $\overline{NMI}$, RTXI, BMODE2–0.

[2] 50 MHz maximum

[3] System Outputs = DATA15–0, ADDR19–1, $\overline{ABE1–0}$, $\overline{BG}$, $\overline{BGH}$, $\overline{AOE}$, $\overline{ARE}$, $\overline{AWE}$, $\overline{AMS3–0}$, $\overline{SRAS}$, $\overline{SCAS}$, $\overline{SWE}$, SCKE, CLKOUT, SA10, $\overline{SMS}$, SCL, SDA, MDC, MDIO, TSCLK0, TFS0, RFS0, RSCLK0, DT0PRI, DT0SEC, PF15–0, PG15–0, PH15–0, RTXO, TDO, $\overline{EMU}$, XTAL, VROUT1–0.

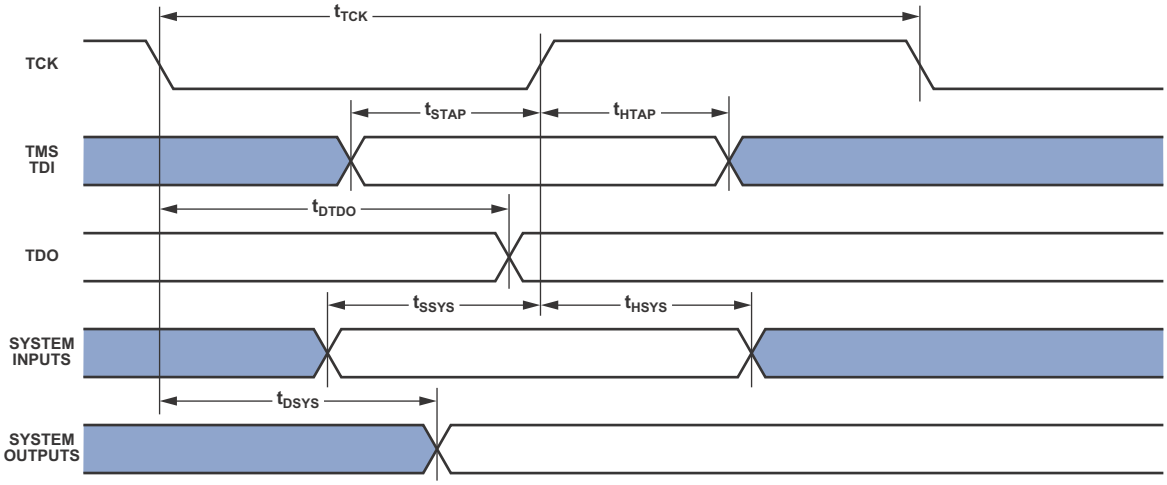

Figure 29. JTAG Port Timing

10/100 Ethernet MAC Controller Timing

Table 40 through Table 45 and Figure 30 through Figure 35 describe the 10/100 Ethernet MAC controller operations. This feature is only available on the ADSP-BF536 and ADSP-BF537 processors.

Table 40. 10/100 Ethernet MAC Controller Timing: MII Receive Signal

Parameter[1]		Min	Max	Unit
f_{ERXCLK}	ERxCLK Frequency (f_{SCLK} = SCLK Frequency)	None	25 + 1% f_{SCLK} + 1%	MHz
$t_{ERXCLKW}$	ERxCLK Width (t_{ERxCLK} = ERxCLK Period)	$t_{ERxCLK} \times 35\%$	$t_{ERxCLK} \times 65\%$	ns
$t_{ERXCLKIS}$	Rx Input Valid to ERxCLK Rising Edge (Data In Setup)	7.5		ns
$t_{ERXCLKIH}$	ERxCLK Rising Edge to Rx Input Invalid (Data In Hold)	7.5		ns

[1] MII inputs synchronous to ERxCLK are ERxD3–0, ERxDV, and ERxER.

Table 41. 10/100 Ethernet MAC Controller Timing: MII Transmit Signal

Parameter[1]		Min	Max	Unit
f_{ETXCLK}	ETxCLK Frequency (f_{SCLK} = SCLK Frequency)	None	25 + 1% f_{SCLK} + 1%	MHz
$t_{ETXCLKW}$	ETxCLK Width (t_{ETXCLK} = ETxCLK Period)	$t_{ETxCLK} \times 35\%$	$t_{ETxCLK} \times 65\%$	ns
$t_{ETXCLKOV}$	ETxCLK Rising Edge to Tx Output Valid (Data Out Valid)		20	ns
$t_{ETXCLKOH}$	ETxCLK Rising Edge to Tx Output Invalid (Data Out Hold)	0		ns

[1] MII outputs synchronous to ETxCLK are ETxD3–0.

Table 42. 10/100 Ethernet MAC Controller Timing: RMII Receive Signal

Parameter[1]		Min	Max	Unit
f_{REFCLK}	REF_CLK Frequency (f_{SCLK} = SCLK Frequency)	None	50 + 1% $2 \times f_{SCLK}$ + 1%	MHz
$t_{REFCLKW}$	REF_CLK Width (t_{REFCLK} = REFCLK Period)	$t_{REFCLK} \times 35\%$	$t_{REFCLK} \times 65\%$	ns
$t_{REFCLKIS}$	Rx Input Valid to RMII REF_CLK Rising Edge (Data In Setup)	4		ns
$t_{REFCLKIH}$	RMII REF_CLK Rising Edge to Rx Input Invalid (Data In Hold)	2		ns

[1] RMII inputs synchronous to RMII REF_CLK are ERxD1–0, RMII CRS_DV, and ERxER.

Table 43. 10/100 Ethernet MAC Controller Timing: RMII Transmit Signal

Parameter[1]		Min	Max	Unit
$t_{REFCLKOV}$	RMII REF_CLK Rising Edge to Tx Output Valid (Data Out Valid)		7.5	ns
$t_{REFCLKOH}$	RMII REF_CLK Rising Edge to Tx Output Invalid (Data Out Hold)	2		ns

[1] RMII outputs synchronous to RMII REF_CLK are ETxD1–0.

Table 44. 10/100 Ethernet MAC Controller Timing: MII/RMII Asynchronous Signal

Parameter[1, 2]		Min	Max	Unit
t_{ECOLH}	COL Pulse Width High	$t_{ETxCLK} \times 1.5$ $t_{ERxCLK} \times 1.5$		ns ns
t_{ECOLL}	COL Pulse Width Low	$t_{ETxCLK} \times 1.5$ $t_{ERxCLK} \times 1.5$		ns ns
t_{ECRSH}	CRS Pulse Width High	$t_{ETxCLK} \times 1.5$		ns
t_{ECRSL}	CRS Pulse Width Low	$t_{ETxCLK} \times 1.5$		ns

[1] MII/RMII asynchronous signals are COL, CRS. These signals are applicable in both MII and RMII modes. The asynchronous COL input is synchronized separately to both the ETxCLK and the ERxCLK, and must have a minimum pulse width high or low at least 1.5 times the period of the slower of the two clocks.
[2] The asynchronous CRS input is synchronized to the ETxCLK, and must have a minimum pulse width high or low at least 1.5 times the period of ETxCLK.

Table 45. 10/100 Ethernet MAC Controller Timing: MII Station Management

Parameter[1]		Min	Max	Unit
t_{MDIOS}	MDIO Input Valid to MDC Rising Edge (Setup)	10		ns
t_{MDCIH}	MDC Rising Edge to MDIO Input Invalid (Hold)	10		ns
t_{MDCOV}	MDC Falling Edge to MDIO Output Valid	25		ns
t_{MDCOH}	MDC Falling Edge to MDIO Output Invalid (Hold)	–1		ns

[1] MDC/MDIO is a 2-wire serial bidirectional port for controlling one or more external PHYs. MDC is an output clock whose minimum period is programmable as a multiple of the system clock SCLK. MDIO is a bidirectional data line.

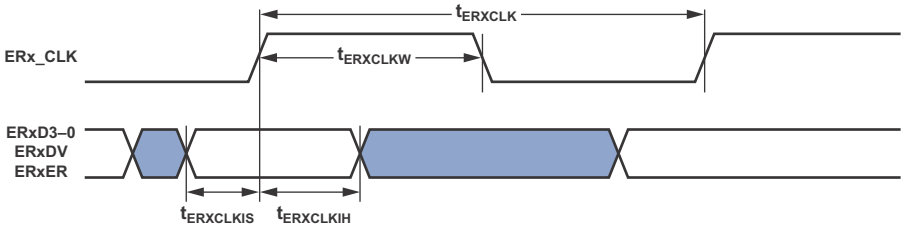

Figure 30. 10/100 Ethernet MAC Controller Timing: MII Receive Signal

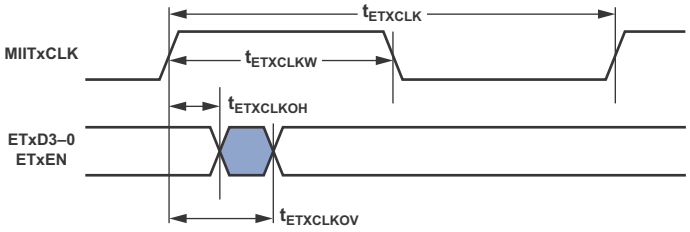

Figure 31. 10/100 Ethernet MAC Controller Timing: MII Transmit Signal

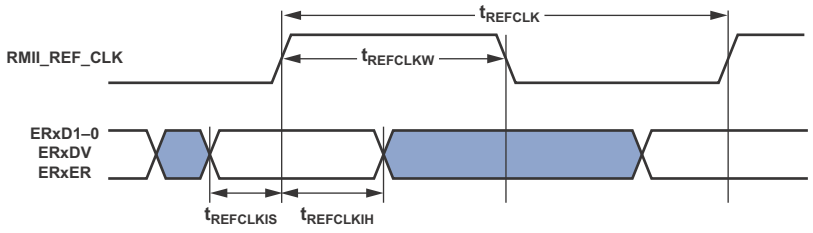

Figure 32. 10/100 Ethernet MAC Controller Timing: RMII Receive Signal

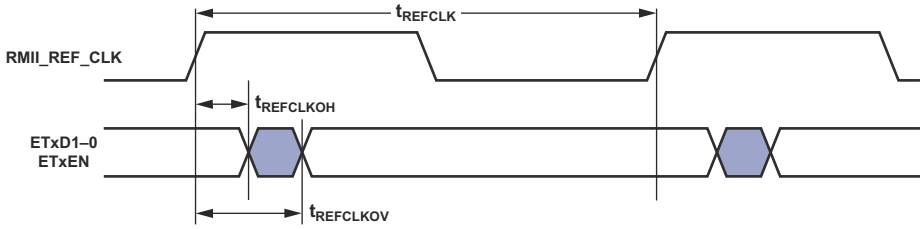

Figure 33. 10/100 Ethernet MAC Controller Timing: RMII Transmit Signal

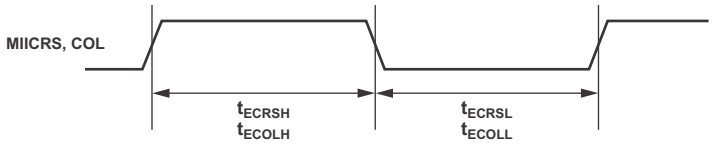

Figure 34. 10/100 Ethernet MAC Controller Timing: Asynchronous Signal

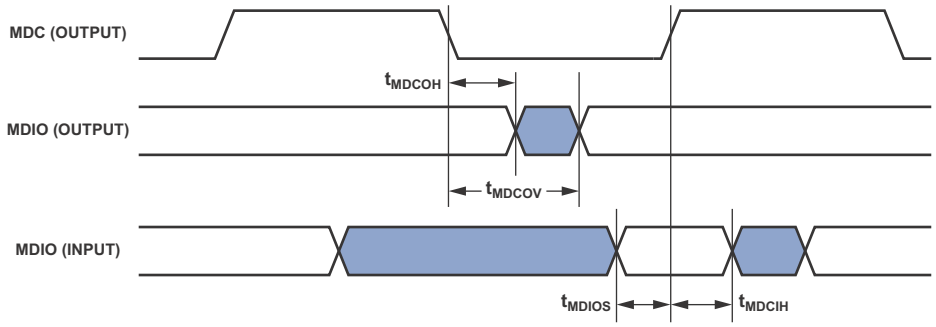

Figure 35. 10/100 Ethernet MAC Controller Timing: MII Station Management

OUTPUT DRIVE CURRENTS

Figure 36 through Figure 47 show typical current-voltage characteristics for the output drivers of the processors. The curves represent the current drive capability of the output drivers as a function of output voltage. See Table 9 on Page 20 for information about which driver type corresponds to a particular pin.

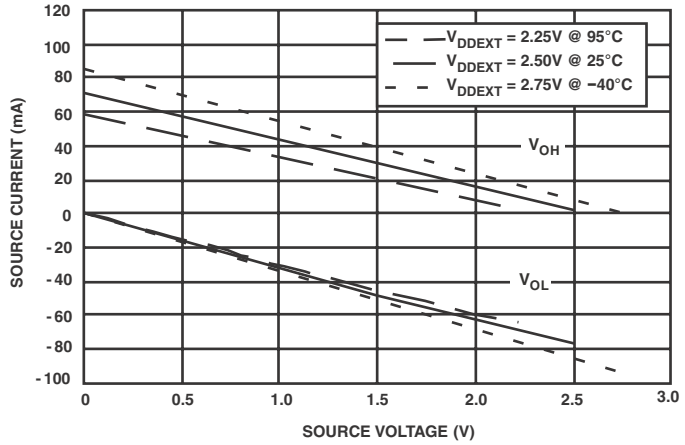

Figure 36. Drive Current A (Low V_{DDEXT})

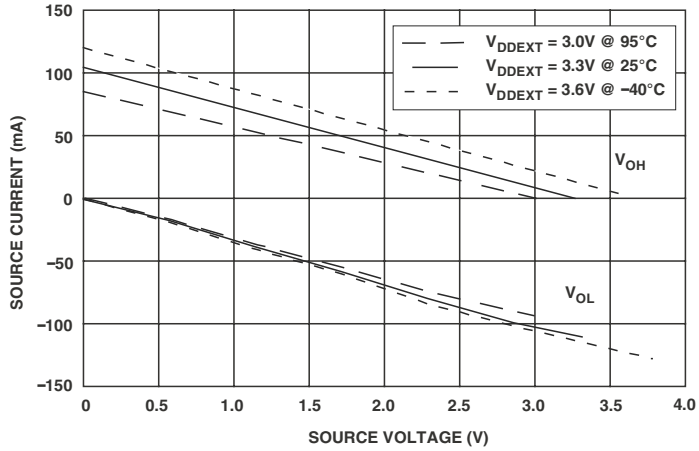

Figure 37. Drive Current A (High V_{DDEXT})

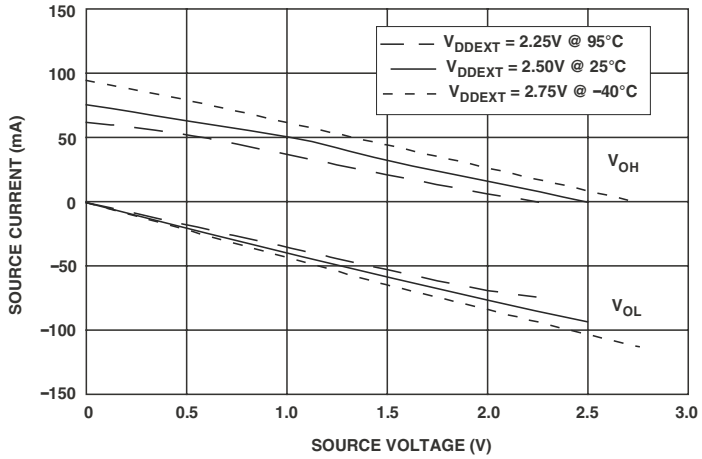

Figure 38. Drive Current B (Low V_{DDEXT})

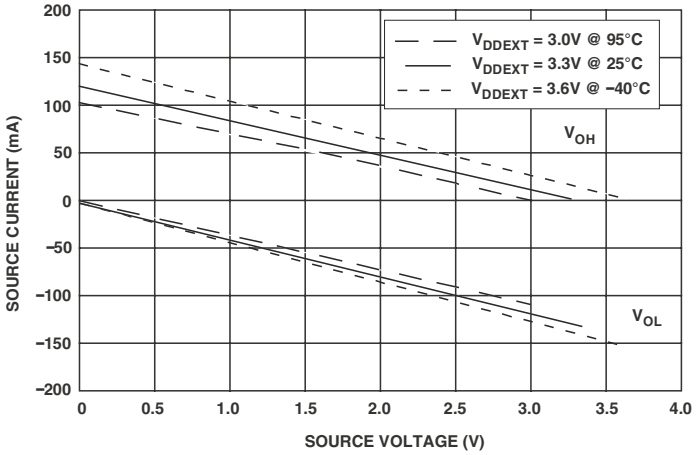

Figure 39. Drive Current B (High V_{DDEXT})

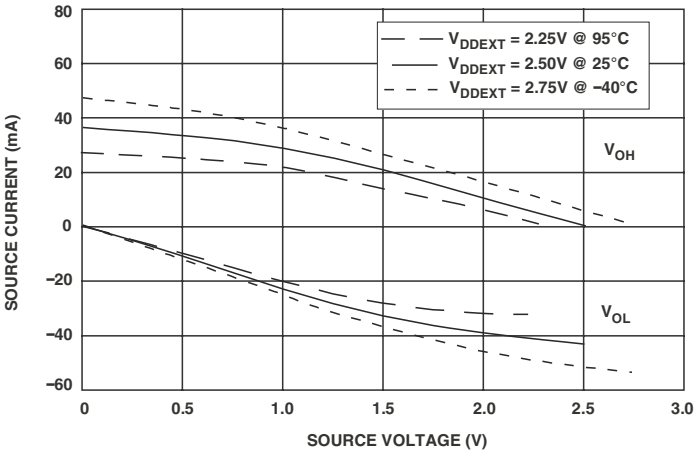

Figure 40. Drive Current C (Low V_{DDEXT})

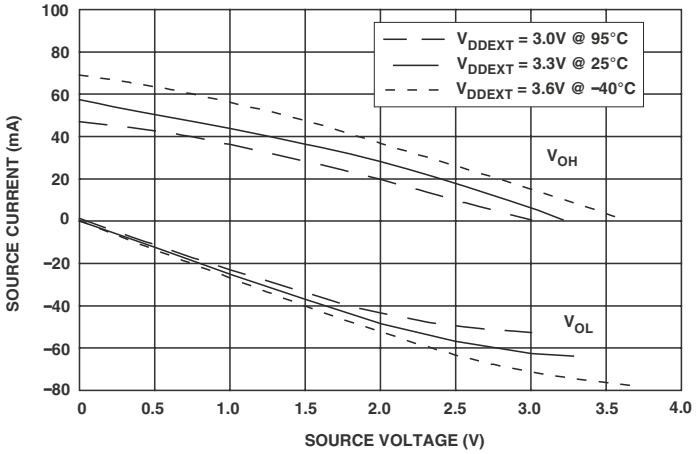

Figure 41. Drive Current C (High V_{DDEXT})

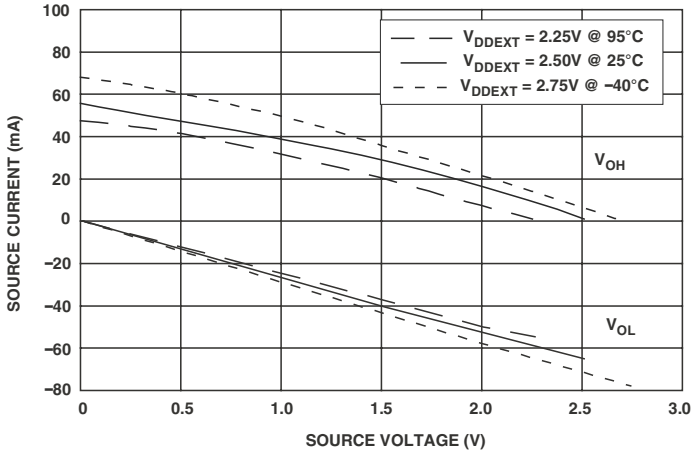

Figure 42. Drive Current D (Low V_{DDEXT})

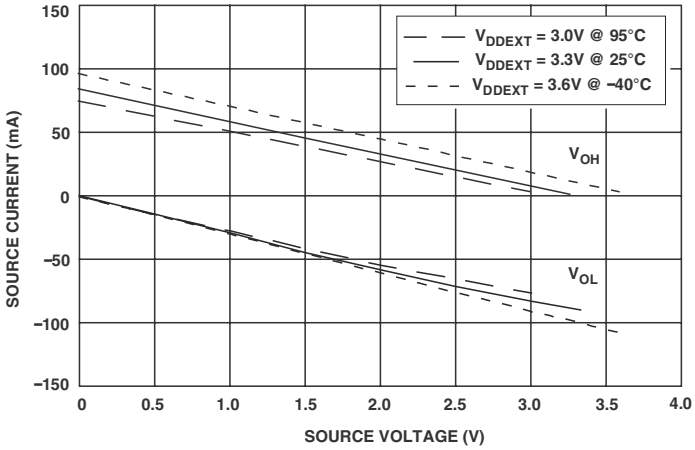

Figure 43. Drive Current D (High V_{DDEXT})

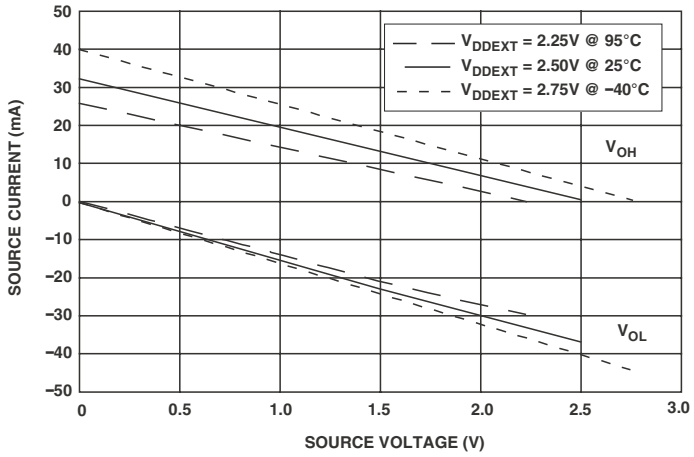

Figure 44. Drive Current E (Low V_{DDEXT})

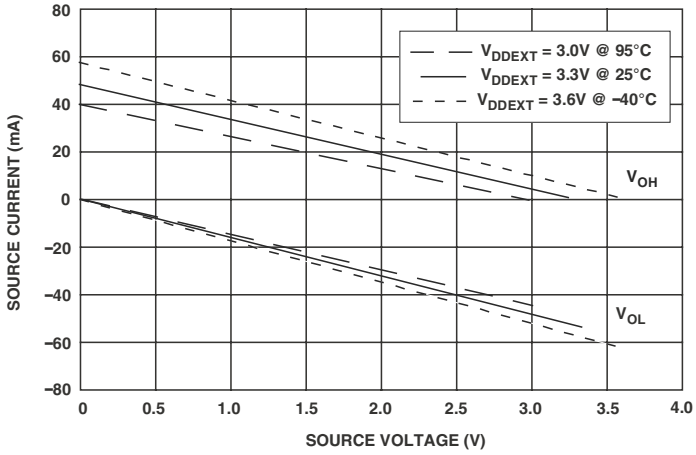

Figure 45. Drive Current E (High V_{DDEXT})

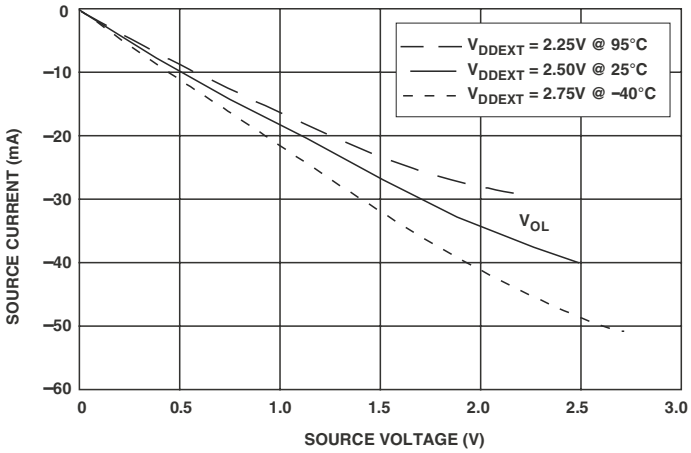

Figure 46. Drive Current F (Low V_{DDEXT})

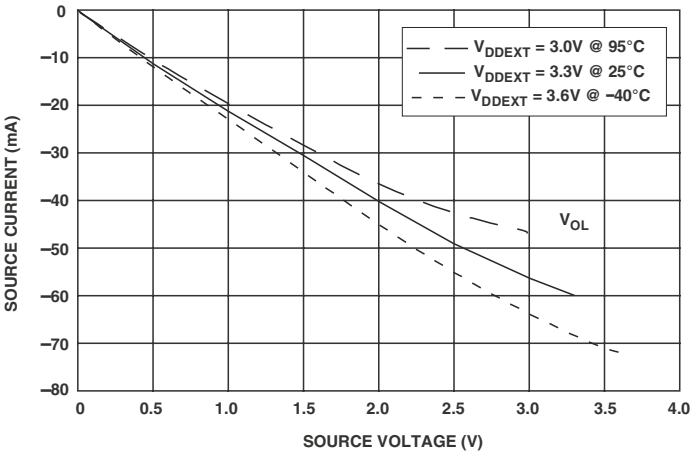

Figure 47. Drive Current F (High V_{DDEXT})

TEST CONDITIONS

All timing parameters appearing in this data sheet were measured under the conditions described in this section. Figure 48 shows the measurement point for ac measurements (other than output enable/disable). The measurement point is $V_{MEAS} = V_{DDEXT}/2$.

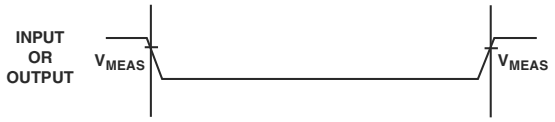

Figure 48. Voltage Reference Levels for AC Measurements (Except Output Enable/Disable)

Output Enable Time

Output pins are considered to be enabled when they have made a transition from a high impedance state to the point when they start driving. The output enable time t_{ENA} is the interval from the point when a reference signal reaches a high or low voltage level to the point when the output starts driving as shown in the Output Enable/Disable diagram (Figure 49). The time $t_{ENA_MEASURED}$ is the interval from when the reference signal switches to when the output voltage reaches 2.0 V (output high) or 1.0 V (output low). Time t_{TRIP} is the interval from when the output starts driving to when the output reaches the 1.0 V or 2.0 V trip voltage. Time t_{ENA} is calculated as shown in the equation:

$$t_{ENA} = t_{ENA_MEASURED} - t_{TRIP}$$

If multiple pins (such as the data bus) are enabled, the measurement value is that of the first pin to start driving.

Output Disable Time

Output pins are considered to be disabled when they stop driving, go into a high impedance state, and start to decay from their output high or low voltage. The time for the voltage on the bus to decay by ΔV is dependent on the capacitive load, C_L, and the load current, I_L. This decay time can be approximated by the equation:

$$t_{DECAY} = (C_L \Delta V)/I_L$$

The output disable time t_{DIS} is the difference between $t_{DIS_MEASURED}$ and t_{DECAY} as shown in Figure 49. The time $t_{DIS_MEASURED}$ is the interval from when the reference signal switches to when the output voltage decays ΔV from the measured output-high or output-low voltage. The time t_{DECAY} is calculated with the test loads C_L and I_L, and with ΔV equal to 0.5 V.

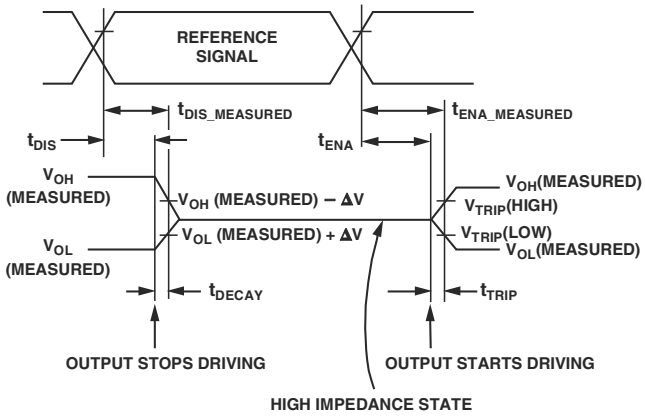

Figure 49. Output Enable/Disable

Example System Hold Time Calculation

To determine the data output hold time in a particular system, first calculate t_{DECAY} using the equation given above. Choose ΔV to be the difference between the processor's output voltage and the input threshold for the device requiring the hold time. A typical ΔV is 0.4 V. C_L is the total bus capacitance (per data line), and I_L is the total leakage or three-state current (per data line). The hold time is t_{DECAY} plus the minimum disable time (for example, t_{DSDAT} for an SDRAM write cycle).

Capacitive Loading

Output delays and holds are based on standard capacitive loads: 30 pF on all pins (see Figure 50). Figure 51 through Figure 60 on Page 56 show how output rise time varies with capacitance. The delay and hold specifications given should be derated by a factor derived from these figures. The graphs in these figures may not be linear outside the ranges shown.

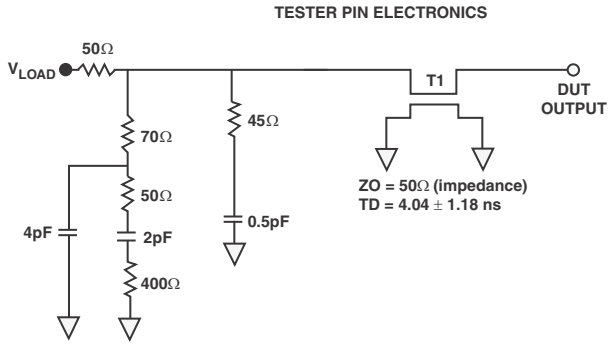

NOTES:
THE WORST CASE TRANSMISSION LINE DELAY IS SHOWN AND CAN BE USED FOR THE OUTPUT TIMING ANALYSIS TO REFELECT THE TRANSMISSION LINE EFFECT AND MUST BE CONSIDERED. THE TRANSMISSION LINE (TD) IS FOR LOAD ONLY AND DOES NOT AFFECT THE DATA SHEET TIMING SPECIFICATIONS.

ANALOG DEVICES RECOMMENDS USING THE IBIS MODEL TIMING FOR A GIVEN SYSTEM REQUIREMENT. IF NECESSARY, A SYSTEM MAY INCORPORATE EXTERNAL DRIVERS TO COMPENSATE FOR ANY TIMING DIFFERENCES.

Figure 50. Equivalent Device Loading for AC Measurements (Includes All Fixtures)

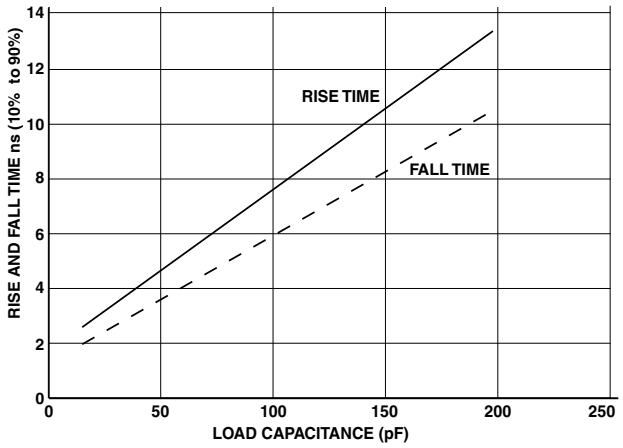

Figure 51. Typical Output Delay or Hold for Driver A at V_{DDEXT} Min

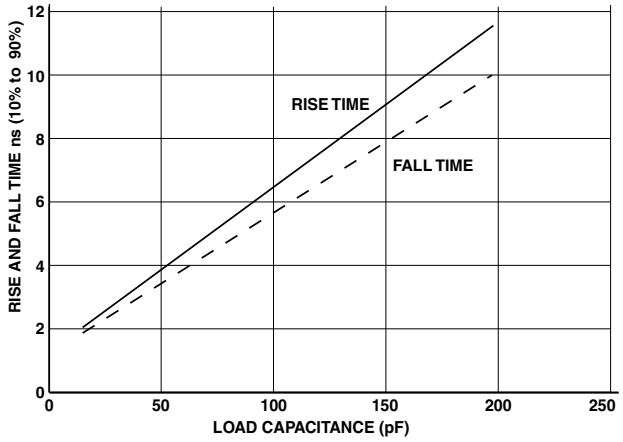

Figure 52. Typical Output Delay or Hold for Driver A at V_{DDEXT} Max

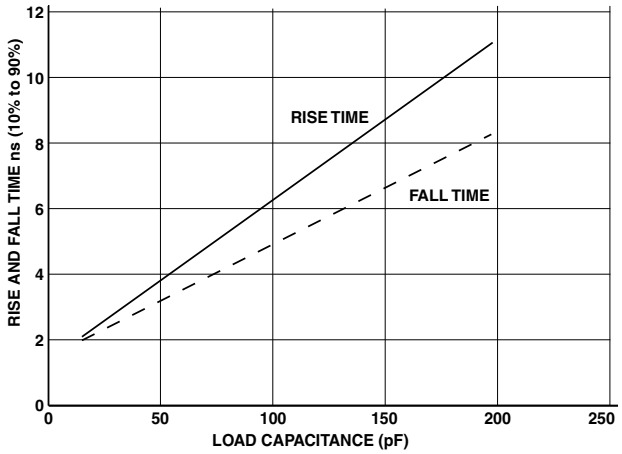

Figure 53. Typical Output Delay or Hold for Driver B at V_{DDEXT} Min

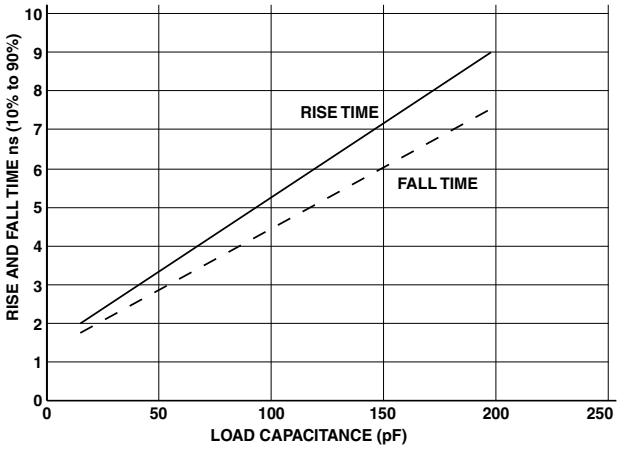

Figure 54. Typical Output Delay or Hold for Driver B at V_{DDEXT} Max

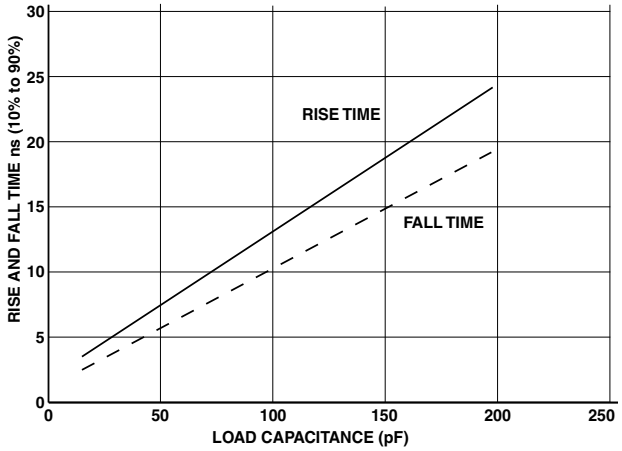

Figure 55. Typical Output Delay or Hold for Driver C at V_{DDEXT} Min

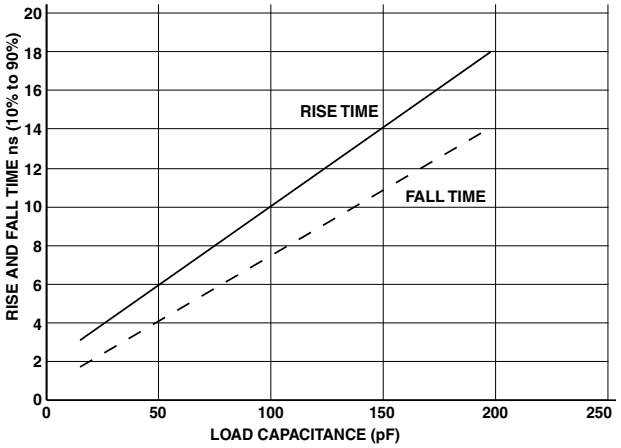

Figure 56. Typical Output Delay or Hold for Driver C at V_{DDEXT} Max

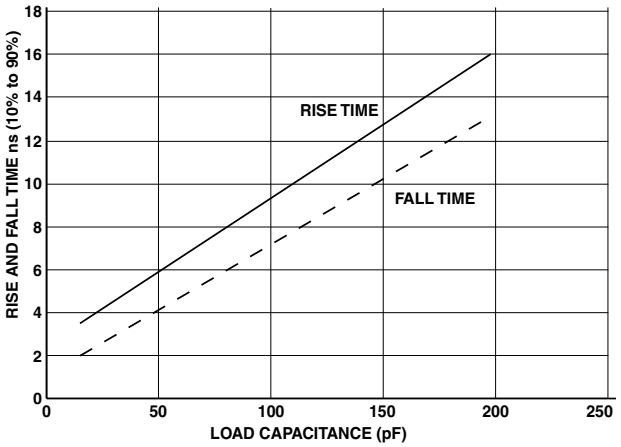

Figure 57. Typical Output Delay or Hold for Driver D at V_{DDEXT} Min

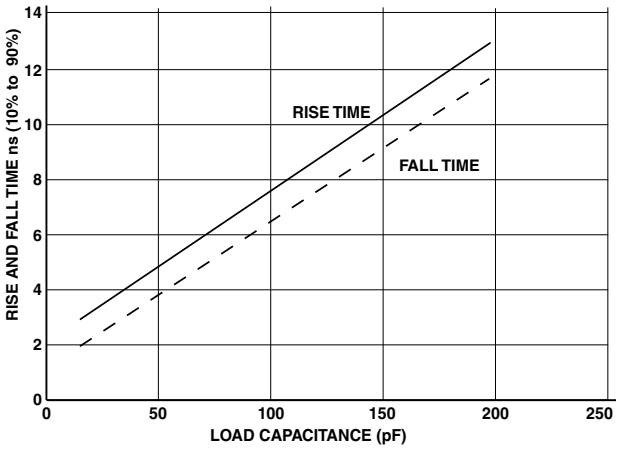

Figure 58. Typical Output Delay or Hold for Driver D at V_{DDEXT} Max

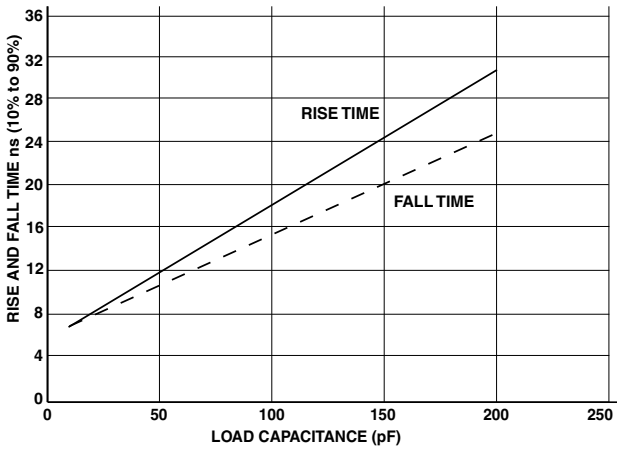

Figure 59. Typical Output Delay or Hold for Driver E at V_{DDEXT} Min

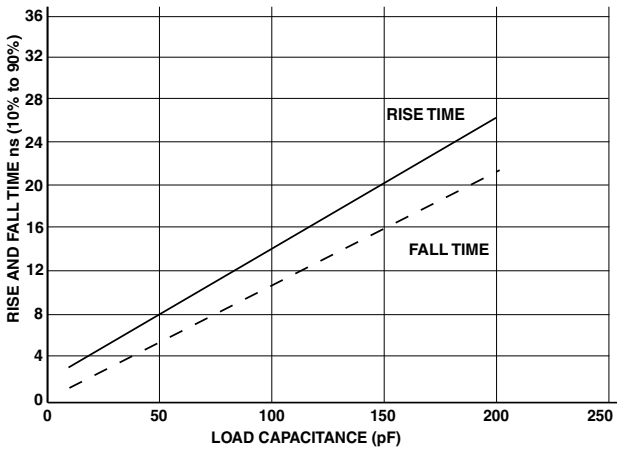

Figure 60. Typical Output Delay or Hold for Driver E at V_{DDEXT} Max

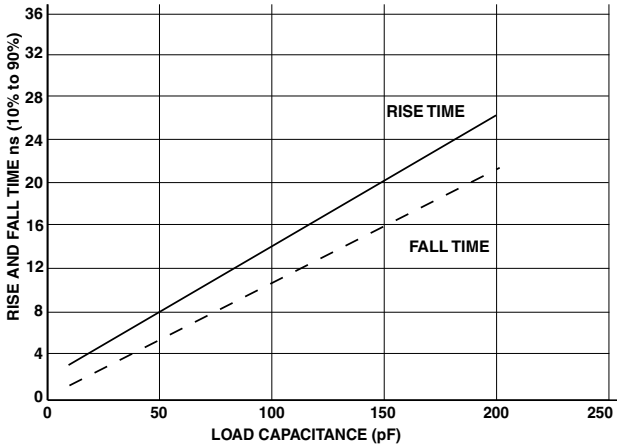

Figure 61. Typical Output Delay or Hold for Driver F at V_{DDEXT} Min

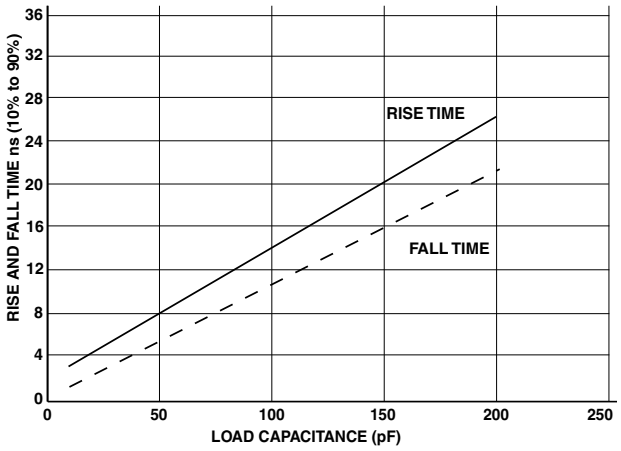

Figure 62. Typical Output Delay or Hold for Driver F at V_{DDEXT} Max

THERMAL CHARACTERISTICS

To determine the junction temperature on the application printed circuit board use:

$$T_J = T_{CASE} + (\Psi_{JT} \times P_D)$$

where:

T_J = Junction temperature (°C)

T_{CASE} = Case temperature (°C) measured by customer at top center of package.

Ψ_{JT} = From Table 46

P_D = Power dissipation (see the power dissipation discussion and the tables on Page 28 for the method to calculate P_D).

Values of θ_{JA} are provided for package comparison and printed circuit board design considerations. θ_{JA} can be used for a first order approximation of T_J by the equation:

$$T_J = T_A + (\theta_{JA} \times P_D)$$

where:

T_A = Ambient temperature (°C)

Values of θ_{JC} are provided for package comparison and printed circuit board design considerations when an external heat sink is required. Values of θ_{JB} are provided for package comparison and printed circuit board design considerations.

In Table 46 through Table 48, airflow measurements comply with JEDEC standards JESD51-2 and JESD51-6, and the junction-to-board measurement complies with JESD51-8. Test board and thermal via design comply with JEDEC standards JESD51-9 (BGA). The junction-to-case measurement complies with MIL-STD-883 (Method 1012.1). All measurements use a 2S2P JEDEC test board.

Industrial applications using the 208-ball BGA package require thermal vias, to an embedded ground plane, in the PCB. Refer to JEDEC standard JESD51-9 for printed circuit board thermal ball land and thermal via design information.

Table 46. Thermal Characteristics (182-Ball BGA)

Parameter	Condition	Typical	Unit
θ_{JA}	0 Linear m/s Airflow	32.80	°C/W
θ_{JMA}	1 Linear m/s Airflow	29.30	°C/W
θ_{JMA}	2 Linear m/s Airflow	28.00	°C/W
θ_{JB}		20.10	°C/W
θ_{JC}		7.92	°C/W
Ψ_{JT}	0 Linear m/s Airflow	0.19	°C/W
Ψ_{JT}	1 Linear m/s Airflow	0.35	°C/W
Ψ_{JT}	2 Linear m/s Airflow	0.45	°C/W

Table 47. Thermal Characteristics (208-Ball BGA without Thermal Vias in PCB)

Parameter	Condition	Typical	Unit
θ_{JA}	0 Linear m/s Airflow	23.30	°C/W
θ_{JMA}	1 Linear m/s Airflow	20.20	°C/W
θ_{JMA}	2 Linear m/s Airflow	19.20	°C/W
θ_{JB}		13.05	°C/W
θ_{JC}		6.92	°C/W
Ψ_{JT}	0 Linear m/s Airflow	0.18	°C/W
Ψ_{JT}	1 Linear m/s Airflow	0.27	°C/W
Ψ_{JT}	2 Linear m/s Airflow	0.32	°C/W

Table 48. Thermal Characteristics (208-Ball BGA with Thermal Vias in PCB)

Parameter	Condition	Typical	Unit
θ_{JA}	0 Linear m/s Airflow	22.60	°C/W
θ_{JMA}	1 Linear m/s Airflow	19.40	°C/W
θ_{JMA}	2 Linear m/s Airflow	18.40	°C/W
θ_{JB}		13.20	°C/W
θ_{JC}		6.85	°C/W
Ψ_{JT}	0 Linear m/s Airflow	0.16	°C/W
Ψ_{JT}	1 Linear m/s Airflow	0.27	°C/W
Ψ_{JT}	2 Linear m/s Airflow	0.32	°C/W

182-BALL CSP_BGA BALL ASSIGNMENT

Table 49 lists the CSP_BGA ball assignment by signal mnemonic. Table 50 on Page 59 lists the CSP_BGA ball assignment by ball number.

Table 49. 182-Ball CSP_BGA Ball Assignment (Alphabetically by Signal Mnemonic)

Mnemonic	Ball No.	Mnemonic	Ball No.	Mnemonic	Ball No.	Mnemonic	Ball No.	Mnemonic	Ball No.
$\overline{\text{ABE0}}$	H13	CLKOUT	B14	GND	L6	PG8	E3	$\overline{\text{SRAS}}$	D13
$\overline{\text{ABE1}}$	H12	DATA0	M9	GND	L8	PG9	E4	$\overline{\text{SWE}}$	D12
ADDR1	J14	DATA1	N9	GND	L10	PH0	C2	TCK	P2
ADDR10	M13	DATA10	N6	GND	M4	PH1	C3	TDI	M3
ADDR11	M14	DATA11	P6	GND	M10	PH10	B6	TDO	N3
ADDR12	N14	DATA12	M5	GND	P14	PH11	A2	TMS	N2
ADDR13	N13	DATA13	N5	$\overline{\text{NMI}}$	B10	PH12	A3	$\overline{\text{TRST}}$	N1
ADDR14	N12	DATA14	P5	PF0	M1	PH13	A4	V_{DDEXT}	A1
ADDR15	M11	DATA15	P4	PF1	L1	PH14	A5	V_{DDEXT}	C12
ADDR16	N11	DATA2	P9	PF10	J2	PH15	A6	V_{DDEXT}	E6
ADDR17	P13	DATA3	M8	PF11	J3	PH2	C4	V_{DDEXT}	E11
ADDR18	P12	DATA4	N8	PF12	H1	PH3	C5	V_{DDEXT}	F4
ADDR19	P11	DATA5	P8	PF13	H2	PH4	C6	V_{DDEXT}	F12
ADDR2	K14	DATA6	M7	PF14	H3	PH5	B1	V_{DDEXT}	H5
ADDR3	L14	DATA7	N7	PF15	H4	PH6	B2	V_{DDEXT}	H10
ADDR4	J13	DATA8	P7	PF2	L2	PH7	B3	V_{DDEXT}	J11
ADDR5	K13	DATA9	M6	PF3	L3	PH8	B4	V_{DDEXT}	J12
ADDR6	L13	$\overline{\text{EMU}}$	M2	PF4	L4	PH9	B5	V_{DDEXT}	K7
ADDR7	K12	GND	A10	PF5	K1	PJ0	C7	V_{DDEXT}	K9
ADDR8	L12	GND	A14	PF6	K2	PJ1	B7	V_{DDEXT}	L7
ADDR9	M12	GND	D4	PF7	K3	PJ10	D10	V_{DDEXT}	L9
$\overline{\text{AMS0}}$	E14	GND	E7	PF8	K4	PJ11	D11	V_{DDEXT}	L11
$\overline{\text{AMS1}}$	F14	GND	E9	PF9	J1	PJ2	B11	V_{DDEXT}	P1
$\overline{\text{AMS2}}$	F13	GND	F5	PG0	G1	PJ3	C11	V_{DDINT}	E5
$\overline{\text{AMS3}}$	G12	GND	F6	PG1	G2	PJ4	D7	V_{DDINT}	E8
$\overline{\text{AOE}}$	G13	GND	F10	PG10	D1	PJ5	D8	V_{DDINT}	E10
ARDY	E13	GND	F11	PG11	D2	PJ6	C8	V_{DDINT}	G10
$\overline{\text{ARE}}$	G14	GND	G4	PG12	D3	PJ7	B8	V_{DDINT}	K5
$\overline{\text{AWE}}$	H14	GND	G5	PG13	D5	PJ8	D9	V_{DDINT}	K8
$\overline{\text{BG}}$	P10	GND	G11	PG14	D6	PJ9	C9	V_{DDINT}	K10
$\overline{\text{BGH}}$	N10	GND	H11	PG15	C1	$\overline{\text{RESET}}$	C10	V_{DDRTC}	B9
BMODE0	N4	GND	J4	PG2	G3	RTXO	A8	VROUT0	A13
BMODE1	P3	GND	J5	PG3	F1	RTXI	A9	VROUT1	B12
BMODE2	L5	GND	J9	PG4	F2	SA10	E12	XTAL	A11
$\overline{\text{BR}}$	D14	GND	J10	PG5	F3	$\overline{\text{SCAS}}$	C14		
CLKBUF	A7	GND	K6	PG6	E1	SCKE	B13		
CLKIN	A12	GND	K11	PG7	E2	$\overline{\text{SMS}}$	C13		

Table 50. 182-Ball CSP_BGA Ball Assignment (Numerically by Ball Number)

Ball No.	Mnemonic	Ball No.	Mnemonic	Ball No.	Mnemonic	Ball No.	Mnemonic	Ball No.	Mnemonic
A1	V_{DDEXT}	C10	$\overline{RESET}$	F5	GND	J14	ADDR1	M9	DATA0
A2	PH11	C11	PJ3	F6	GND	K1	PF5	M10	GND
A3	PH12	C12	V_{DDEXT}	F10	GND	K2	PF6	M11	ADDR15
A4	PH13	C13	$\overline{SMS}$	F11	GND	K3	PF7	M12	ADDR9
A5	PH14	C14	$\overline{SCAS}$	F12	V_{DDEXT}	K4	PF8	M13	ADDR10
A6	PH15	D1	PG10	F13	$\overline{AMS2}$	K5	V_{DDINT}	M14	ADDR11
A7	CLKBUF	D2	PG11	F14	$\overline{AMS1}$	K6	GND	N1	$\overline{TRST}$
A8	RTXO	D3	PG12	G1	PG0	K7	V_{DDEXT}	N2	TMS
A9	RTXI	D4	GND	G2	PG1	K8	V_{DDINT}	N3	TDO
A10	GND	D5	PG13	G3	PG2	K9	V_{DDEXT}	N4	BMODE0
A11	XTAL	D6	PG14	G4	GND	K10	V_{DDINT}	N5	DATA13
A12	CLKIN	D7	PJ4	G5	GND	K11	GND	N6	DATA10
A13	VROUT0	D8	PJ5	G10	V_{DDINT}	K12	ADDR7	N7	DATA7
A14	GND	D9	PJ8	G11	GND	K13	ADDR5	N8	DATA4
B1	PH5	D10	PJ10	G12	$\overline{AMS3}$	K14	ADDR2	N9	DATA1
B2	PH6	D11	PJ11	G13	$\overline{AOE}$	L1	PF1	N10	$\overline{BGH}$
B3	PH7	D12	$\overline{SWE}$	G14	$\overline{ARE}$	L2	PF2	N11	ADDR16
B4	PH8	D13	$\overline{SRAS}$	H1	PF12	L3	PF3	N12	ADDR14
B5	PH9	D14	$\overline{BR}$	H2	PF13	L4	PF4	N13	ADDR13
B6	PH10	E1	PG6	H3	PF14	L5	BMODE2	N14	ADDR12
B7	PJ1	E2	PG7	H4	PF15	L6	GND	P1	V_{DDEXT}
B8	PJ7	E3	PG8	H5	V_{DDEXT}	L7	V_{DDEXT}	P2	TCK
B9	V_{DDRTC}	E4	PG9	H10	V_{DDEXT}	L8	GND	P3	BMODE1
B10	$\overline{NMI}$	E5	V_{DDINT}	H11	GND	L9	V_{DDEXT}	P4	DATA15
B11	PJ2	E6	V_{DDEXT}	H12	$\overline{ABE1}$	L10	GND	P5	DATA14
B12	VROUT1	E7	GND	H13	$\overline{ABE0}$	L11	V_{DDEXT}	P6	DATA11
B13	SCKE	E8	V_{DDINT}	H14	$\overline{AWE}$	L12	ADDR8	P7	DATA8
B14	CLKOUT	E9	GND	J1	PF9	L13	ADDR6	P8	DATA5
C1	PG15	E10	V_{DDINT}	J2	PF10	L14	ADDR3	P9	DATA2
C2	PH0	E11	V_{DDEXT}	J3	PF11	M1	PF0	P10	$\overline{BG}$
C3	PH1	E12	SA10	J4	GND	M2	$\overline{EMU}$	P11	ADDR19
C4	PH2	E13	ARDY	J5	GND	M3	TDI	P12	ADDR18
C5	PH3	E14	$\overline{AMS0}$	J9	GND	M4	GND	P13	ADDR17
C6	PH4	F1	PG3	J10	GND	M5	DATA12	P14	GND
C7	PJ0	F2	PG4	J11	V_{DDEXT}	M6	DATA9		
C8	PJ6	F3	PG5	J12	V_{DDEXT}	M7	DATA6		
C9	PJ9	F4	V_{DDEXT}	J13	ADDR4	M8	DATA3		

Figure 63 shows the top view of the CSP_BGA ball configuration. Figure 64 shows the bottom view of the CSP_BGA ball configuration.

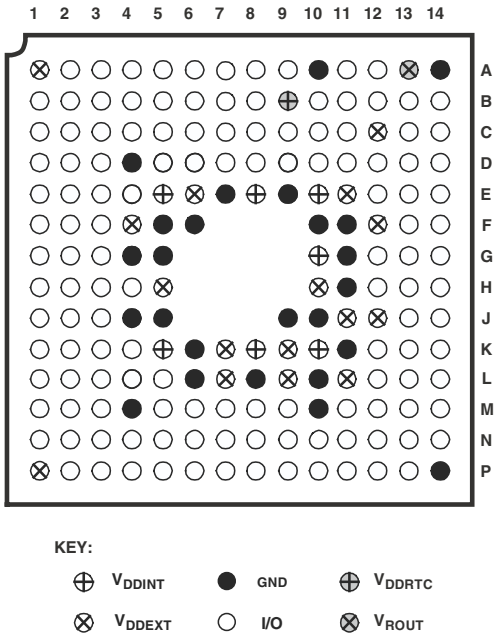

Figure 63. 182-Ball CSP_BGA Configuration (Top View)

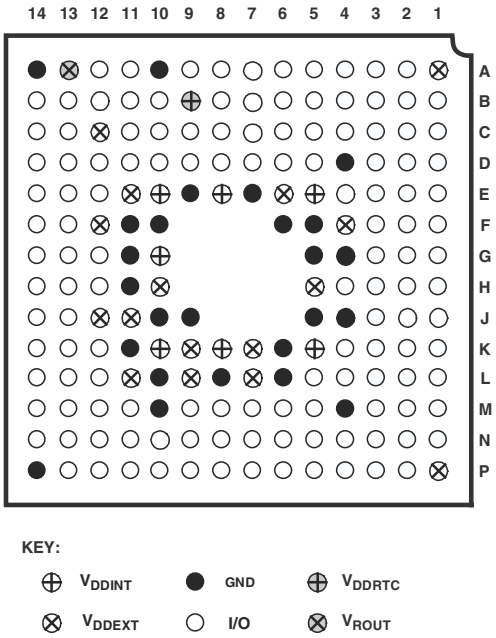

Figure 64. 182-Ball CSP_BGA Configuration (Bottom View)

208-BALL CSP_BGA BALL ASSIGNMENT

Table 51 lists the CSP_BGA ball assignment by signal mnemonic. Table 52 on Page 62 lists the CSP_BGA ball assignment by ball number.

Table 51. 208-Ball CSP_BGA Ball Assignment (Alphabetically by Signal Mnemonic)

Mnemonic	Ball No.	Mnemonic	Ball No.	Mnemonic	Ball No.	Mnemonic	Ball No.	Mnemonic	Ball No.
$\overline{\text{ABE0}}$	P19	DATA12	Y4	GND	M13	PG6	E2	TDI	V1
$\overline{\text{ABE1}}$	P20	DATA13	W4	GND	N9	PG7	D1	TDO	Y2
ADDR1	R19	DATA14	Y3	GND	N10	PG8	D2	TMS	U2
ADDR10	W18	DATA15	W3	GND	N11	PG9	C1	$\overline{\text{TRST}}$	U1
ADDR11	Y18	DATA2	Y9	GND	N12	PH0	B4	V_{DDEXT}	G7
ADDR12	W17	DATA3	W9	GND	N13	PH1	A5	V_{DDEXT}	G8
ADDR13	Y17	DATA4	Y8	GND	P11	PH10	B9	V_{DDEXT}	G9
ADDR14	W16	DATA5	W8	GND	V2	PH11	A10	V_{DDEXT}	G10
ADDR15	Y16	DATA6	Y7	GND	W2	PH12	B10	V_{DDEXT}	H7
ADDR16	W15	DATA7	W7	GND	W19	PH13	A11	V_{DDEXT}	H8
ADDR17	Y15	DATA8	Y6	GND	Y1	PH14	B11	V_{DDEXT}	J7
ADDR18	W14	DATA9	W6	GND	Y13	PH15	A12	V_{DDEXT}	J8
ADDR19	Y14	$\overline{\text{EMU}}$	T1	GND	Y20	PH2	B5	V_{DDEXT}	K7
ADDR2	T20	GND	A1	$\overline{\text{NMI}}$	C20	PH3	A6	V_{DDEXT}	K8
ADDR3	T19	GND	A13	PF0	T2	PH4	B6	V_{DDEXT}	L7
ADDR4	U20	GND	A20	PF1	R1	PH5	A7	V_{DDEXT}	L8
ADDR5	U19	GND	B2	PF10	L2	PH6	B7	V_{DDEXT}	M7
ADDR6	V20	GND	G11	PF11	K1	PH7	A8	V_{DDEXT}	M8
ADDR7	V19	GND	H9	PF12	K2	PH8	B8	V_{DDEXT}	N7
ADDR8	W20	GND	H10	PF13	J1	PH9	A9	V_{DDEXT}	N8
ADDR9	Y19	GND	H11	PF14	J2	PJ0	B12	V_{DDEXT}	P7
$\overline{\text{AMS0}}$	M20	GND	H12	PF15	H1	PJ1	B13	V_{DDEXT}	P8
$\overline{\text{AMS1}}$	M19	GND	H13	PF2	R2	PJ10	B19	V_{DDEXT}	P9
$\overline{\text{AMS2}}$	G20	GND	J9	PF3	P1	PJ11	C19	V_{DDEXT}	P10
$\overline{\text{AMS3}}$	G19	GND	J10	PF4	P2	PJ2	D19	V_{DDINT}	G12
$\overline{\text{AOE}}$	N20	GND	J11	PF5	N1	PJ3	E19	V_{DDINT}	G13
ARDY	J19	GND	J12	PF6	N2	PJ4	B18	V_{DDINT}	G14
$\overline{\text{ARE}}$	N19	GND	J13	PF7	M1	PJ5	A19	V_{DDINT}	H14
$\overline{\text{AWE}}$	R20	GND	K9	PF8	M2	PJ6	B15	V_{DDINT}	J14
$\overline{\text{BG}}$	Y11	GND	K10	PF9	L1	PJ7	B16	V_{DDINT}	K14
$\overline{\text{BGH}}$	Y12	GND	K11	PG0	H2	PJ8	B17	V_{DDINT}	L14
BMODE0	W13	GND	K12	PG1	G1	PJ9	B20	V_{DDINT}	M14
BMODE1	W12	GND	K13	PG10	C2	$\overline{\text{RESET}}$	D20	V_{DDINT}	N14
BMODE2	W11	GND	L9	PG11	B1	RTXO	A15	V_{DDINT}	P12
$\overline{\text{BR}}$	F19	GND	L10	PG12	A2	RTXI	A14	V_{DDINT}	P13
CLKBUF	B14	GND	L11	PG13	A3	SA10	L20	V_{DDINT}	P14
CLKIN	A18	GND	L12	PG14	B3	$\overline{\text{SCAS}}$	K20	V_{DDRTC}	A16
CLKOUT	H19	GND	L13	PG15	A4	SCKE	H20	VROUT0	E20
DATA0	Y10	GND	M9	PG2	G2	$\overline{\text{SMS}}$	J20	VROUT1	F20
DATA1	W10	GND	M10	PG3	F1	$\overline{\text{SRAS}}$	K19	XTAL	A17
DATA10	Y5	GND	M11	PG4	F2	$\overline{\text{SWE}}$	L19		
DATA11	W5	GND	M12	PG5	E1	TCK	W1		

Table 52 lists the CSP_BGA ball assignment by ball number. Table 51 on Page 61 lists the CSP_BGA ball assignment by signal mnemonic.

Table 52. 208-Ball CSP_BGA Ball Assignment (Numerically by Ball Number)

Ball No.	Mnemonic	Ball No.	Mnemonic	Ball No.	Mnemonic	Ball No.	Mnemonic	Ball No.	Mnemonic
A1	GND	C19	PJ11	J9	GND	M19	$\overline{AMS1}$	W1	TCK
A2	PG12	C20	$\overline{NMI}$	J10	GND	M20	$\overline{AMS0}$	W2	GND
A3	PG13	D1	PG7	J11	GND	N1	PF5	W3	DATA15
A4	PG15	D2	PG8	J12	GND	N2	PF6	W4	DATA13
A5	PH1	D19	PJ2	J13	GND	N7	V_{DDEXT}	W5	DATA11
A6	PH3	D20	$\overline{RESET}$	J14	V_{DDINT}	N8	V_{DDEXT}	W6	DATA9
A7	PH5	E1	PG5	J19	ARDY	N9	GND	W7	DATA7
A8	PH7	E2	PG6	J20	$\overline{SMS}$	N10	GND	W8	DATA5
A9	PH9	E19	PJ3	K1	PF11	N11	GND	W9	DATA3
A10	PH11	E20	VROUT0	K2	PF12	N12	GND	W10	DATA1
A11	PH13	F1	PG3	K7	V_{DDEXT}	N13	GND	W11	BMODE2
A12	PH15	F2	PG4	K8	V_{DDEXT}	N14	V_{DDINT}	W12	BMODE1
A13	GND	F19	$\overline{BR}$	K9	GND	N19	$\overline{ARE}$	W13	BMODE0
A14	RTXI	F20	VROUT1	K10	GND	N20	$\overline{AOE}$	W14	ADDR18
A15	RTXO	G1	PG1	K11	GND	P1	PF3	W15	ADDR16
A16	V_{DDRTC}	G2	PG2	K12	GND	P2	PF4	W16	ADDR14
A17	XTAL	G7	V_{DDEXT}	K13	GND	P7	V_{DDEXT}	W17	ADDR12
A18	CLKIN	G8	V_{DDEXT}	K14	V_{DDINT}	P8	V_{DDEXT}	W18	ADDR10
A19	PJ5	G9	V_{DDEXT}	K19	$\overline{SRAS}$	P9	V_{DDEXT}	W19	GND
A20	GND	G10	V_{DDEXT}	K20	$\overline{SCAS}$	P10	V_{DDEXT}	W20	ADDR8
B1	PG11	G11	GND	L1	PF9	P11	GND	Y1	GND
B2	GND	G12	V_{DDINT}	L2	PF10	P12	V_{DDINT}	Y2	TDO
B3	PG14	G13	V_{DDINT}	L7	V_{DDEXT}	P13	V_{DDINT}	Y3	DATA14
B4	PH0	G14	V_{DDINT}	L8	V_{DDEXT}	P14	V_{DDINT}	Y4	DATA12
B5	PH2	G19	$\overline{AMS3}$	L9	GND	P19	$\overline{ABE0}$	Y5	DATA10
B6	PH4	G20	$\overline{AMS2}$	L10	GND	P20	$\overline{ABE1}$	Y6	DATA8
B7	PH6	H1	PF15	L11	GND	R1	PF1	Y7	DATA6
B8	PH8	H2	PG0	L12	GND	R2	PF2	Y8	DATA4
B9	PH10	H7	V_{DDEXT}	L13	GND	R19	ADDR1	Y9	DATA2
B10	PH12	H8	V_{DDEXT}	L14	V_{DDINT}	R20	$\overline{AWE}$	Y10	DATA0
B11	PH14	H9	GND	L19	$\overline{SWE}$	T1	$\overline{EMU}$	Y11	$\overline{BG}$
B12	PJ0	H10	GND	L20	SA10	T2	PF0	Y12	$\overline{BGH}$
B13	PJ1	H11	GND	M1	PF7	T19	ADDR3	Y13	GND
B14	CLKBUF	H12	GND	M2	PF8	T20	ADDR2	Y14	ADDR19
B15	PJ6	H13	GND	M7	V_{DDEXT}	U1	$\overline{TRST}$	Y15	ADDR17
B16	PJ7	H14	V_{DDINT}	M8	V_{DDEXT}	U2	TMS	Y16	ADDR15
B17	PJ8	H19	CLKOUT	M9	GND	U19	ADDR5	Y17	ADDR13
B18	PJ4	H20	SCKE	M10	GND	U20	ADDR4	Y18	ADDR11
B19	PJ10	J1	PF13	M11	GND	V1	TDI	Y19	ADDR9
B20	PJ9	J2	PF14	M12	GND	V2	GND	Y20	GND
C1	PG9	J7	V_{DDEXT}	M13	GND	V19	ADDR7		
C2	PG10	J8	V_{DDEXT}	M14	V_{DDINT}	V20	ADDR6		

Figure 65 shows the top view of the CSP_BGA ball configuration. Figure 66 shows the bottom view of the CSP_BGA ball configuration.

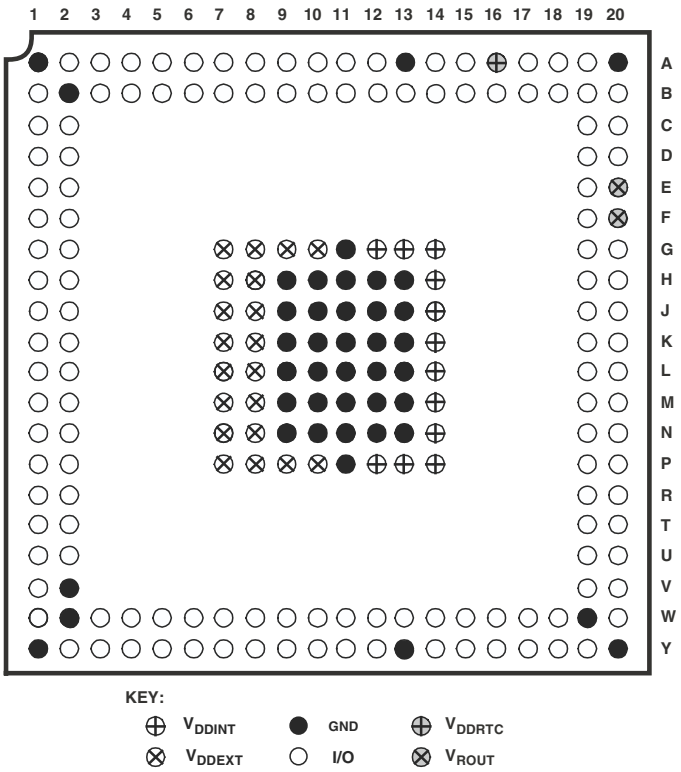

Figure 65. 208-Ball CSP_BGA Configuration (Top View)

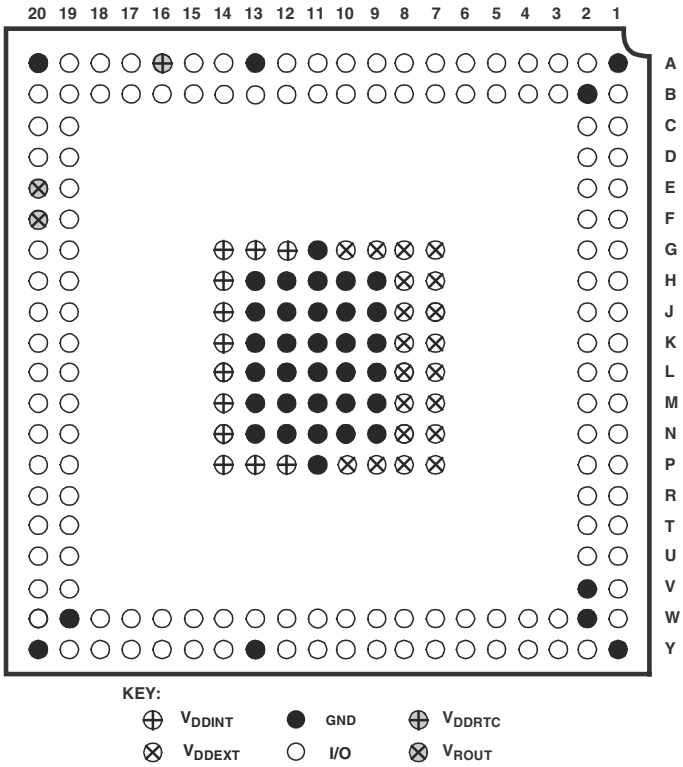

Figure 66. 208-Ball CSP_BGA Configuration (Bottom View)

OUTLINE DIMENSIONS

Dimensions in Figure 67 and Figure 68 are shown in millimeters.

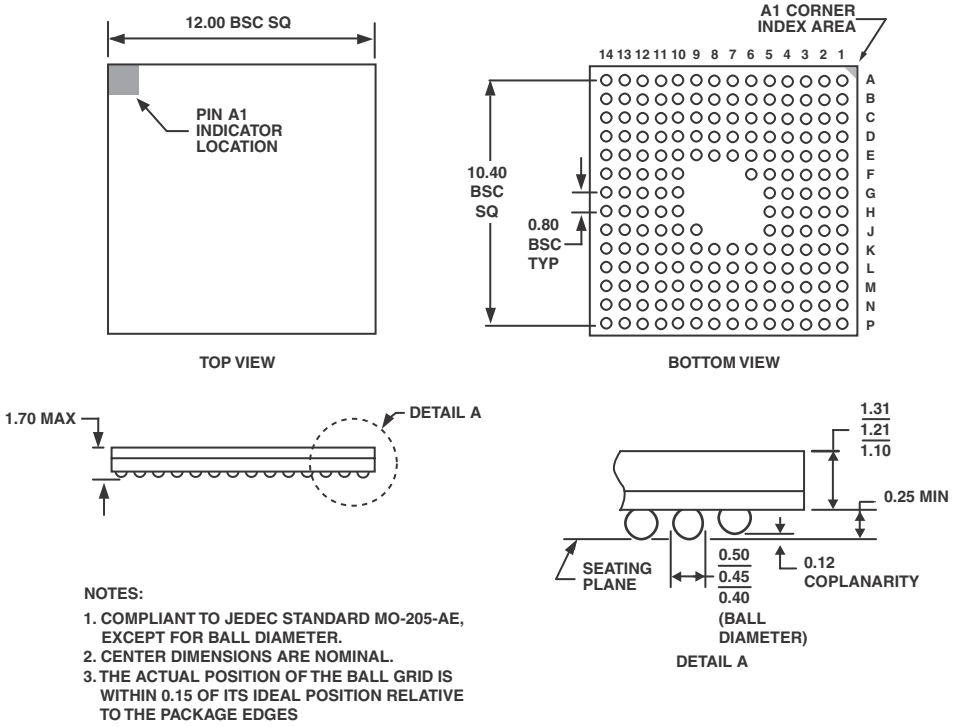

Figure 67. 182-Ball Chip Scale Package Ball Grid Array [CSP_BGA] (BC-182)
Dimensions shown in millimeters

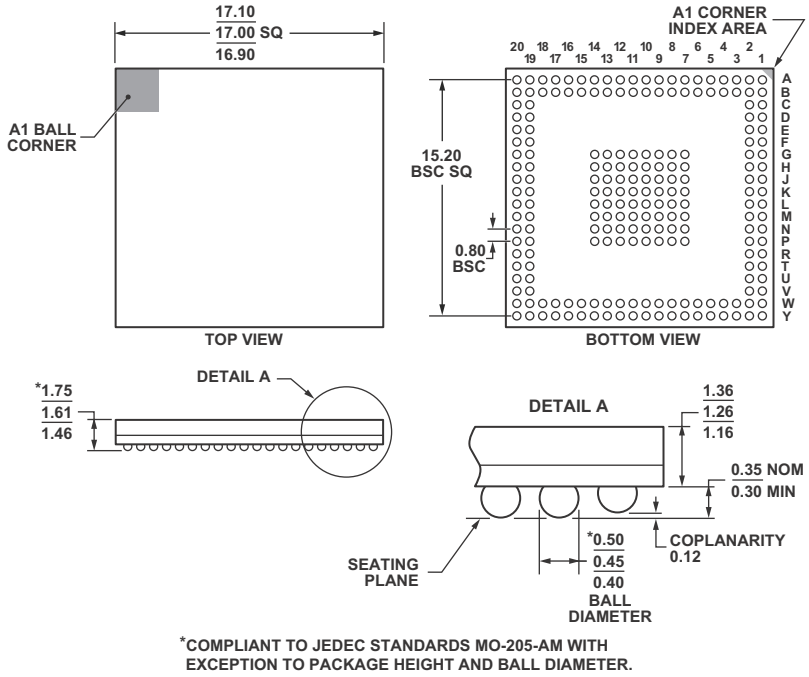

Figure 68. 208-Ball Chip Scale Package Ball Grid Array [CSP_BGA] (BC-208-2)
Dimensions shown in millimeters

SURFACE-MOUNT DESIGN

The following table is provided as an aid to PCB design. For industry-standard design recommendations, refer to IPC-7351, *Generic Requirements for Surface Mount Design and Land Pattern Standard.*

Package	Package Ball Attach Type	Package Solder Mask Opening	Package Ball Pad Size
182-Ball CSP_BGA (BC-182)	Solder Mask Defined	0.40 mm diameter	0.55 mm diameter
208-Ball CSP_BGA (BC-208-2)	Solder Mask Defined	0.40 mm diameter	0.55 mm diameter

AUTOMOTIVE PRODUCTS

The ADBF534W model is available with controlled manufacturing to support the quality and reliability requirements of automotive applications. Note that these automotive models may have specifications that differ from the commercial models and designers should review the Specifications section of this data sheet carefully. Only the automotive grade products shown in Table 53 are available for use in automotive applications. Contact your local ADI account representative for specific product ordering information and to obtain the specific Automotive Reliability reports for these models.

Table 53. Automotive Products

Product Family[1,2]	Temperature Range[3]	Speed Grade (Max)	Package Description	Package Option
ADBF534WBBCZ4Axx	–40°C to +85°C	400 MHz	182-Ball CSP_BGA	BC-182
ADBF534WBBCZ4Bxx	–40°C to +85°C	400 MHz	208-Ball CSP_BGA	BC-208-2
ADBF534WYBCZ4Bxx	–40°C to +105°C	400 MHz	208-Ball CSP_BGA	BC-208-2

[1] Z = RoHS compliant part.
[2] xx denotes silicon revision.
[3] Referenced temperature is ambient temperature.

ORDERING GUIDE

In the following table CSP_BGA = Chip Scale Package Ball Grid Array.

Model [1]	Temperature Range[2]	Speed Grade (Max)	Package Description	Package Option
ADSP-BF534BBC-4A	–40°C to +85°C	400 MHz	182-Ball CSP_BGA	BC-182
ADSP-BF534BBCZ-4A	–40°C to +85°C	400 MHz	182-Ball CSP_BGA	BC-182
ADSP-BF534BBC-5A	–40°C to +85°C	500 MHz	182-Ball CSP_BGA	BC-182
ADSP-BF534BBCZ-5A	–40°C to +85°C	500 MHz	182-Ball CSP_BGA	BC-182
ADSP-BF534BBCZ-4B	–40°C to +85°C	400 MHz	208-Ball CSP_BGA	BC-208-2
ADSP-BF534YBCZ-4B	–40°C to +105°C	400 MHz	208-Ball CSP_BGA	BC-208-2
ADSP-BF534BBCZ-5B	–40°C to +85°C	500 MHz	208-Ball CSP_BGA	BC-208-2
ADSP-BF536BBC-3A	–40°C to +85°C	300 MHz	182-Ball CSP_BGA	BC-182
ADSP-BF536BBCZ-3A	–40°C to +85°C	300 MHz	182-Ball CSP_BGA	BC-182
ADSP-BF536BBC-4A	–40°C to +85°C	400 MHz	182-Ball CSP_BGA	BC-182
ADSP-BF536BBCZ-4A	–40°C to +85°C	400 MHz	182-Ball CSP_BGA	BC-182
ADSP-BF536BBCZ-3B	–40°C to +85°C	300 MHz	208-Ball CSP_BGA	BC-208-2
ADSP-BF536BBCZ3BRL	–40°C to +85°C	300 MHz	208-Ball CSP_BGA, 13" Tape and Reel	BC-208-2
ADSP-BF536BBCZ-4B	–40°C to +85°C	400 MHz	208-Ball CSP_BGA	BC-208-2
ADSP-BF537BBC-5A	–40°C to +85°C	500 MHz	182-Ball CSP_BGA	BC-182
ADSP-BF537BBCZ-5A	–40°C to +85°C	500 MHz	182-Ball CSP_BGA	BC-182
ADSP-BF537BBCZ-5B	–40°C to +85°C	500 MHz	208-Ball CSP_BGA	BC-208-2
ADSP-BF537BBCZ-5AV	–40°C to +85°C	533 MHz	182-Ball CSP_BGA	BC-182
ADSP-BF537BBCZ-5BV	–40°C to +85°C	533 MHz	208-Ball CSP_BGA	BC-208-2
ADSP-BF537KBCZ-6AV	0°C to +70°C	600 MHz	182-Ball CSP_BGA	BC-182
ADSP-BF537KBCZ-6BV	0°C to +70°C	600 MHz	208-Ball CSP_BGA	BC-208-2

[1] Z = RoHS compliant part.

[2] Referenced temperature is ambient temperature. The ambient temperature is not a specification. Please see Operating Conditions on Page 24 for junction temperature (T_J) specification which is the only temperature specification.

©2010 Analog Devices, Inc. All rights reserved. Trademarks and registered trademarks are the property of their respective owners.
D05317-0-7/10(I)

Общество с ограниченной ответственностью «МосЧип» ИНН 7719860671 / КПП 771901001
Адрес: 105318, г.Москва, ул.Щербаковская д.3, офис 1107

Данный компонент на территории Российской Федерации

Вы можете приобрести в компании MosChip.

Для оперативного оформления запроса Вам необходимо перейти по данной ссылке:

http://moschip.ru/get-element

Вы можете разместить у нас заказ для любого Вашего проекта, будь то серийное производство или разработка единичного прибора.

В нашем ассортименте представлены ведущие мировые производители активных и пассивных электронных компонентов.

Нашей специализацией является поставка электронной компонентной базы двойного назначения, продукции таких производителей как XILINX, Intel (ex.ALTERA), Vicor, Microchip, Texas Instruments, Analog Devices, Mini-Circuits, Amphenol, Glenair.

Сотрудничество с глобальными дистрибьюторами электронных компонентов, предоставляет возможность заказывать и получать с международных складов практически любой перечень компонентов в оптимальные для Вас сроки.

На всех этапах разработки и производства наши партнеры могут получить квалифицированную поддержку опытных инженеров.

Система менеджмента качества компании отвечает требованиям в соответствии с ГОСТ Р ИСО 9001, ГОСТ РВ 0015-002 и ЭС РД 009

Офис по работе с юридическими лицами:

105318, г.Москва, ул.Щербаковская д.3, офис 1107, 1118, ДЦ «Щербаковский»

Телефон: +7 495 668-12-70 (многоканальный)

Факс: +7 495 668-12-70 (доб.304)

E-mail: info@moschip.ru

Skype отдела продаж:
moschip.ru
moschip.ru_4
moschip.ru_6
moschip.ru_9