THIS DRAWING IS UNPUBLISHED. RELEASED FOR PUBLICATION 20
© COPYRIGHT 20 - ALL RIGHTS RESERVED.

LOC	DIST
ES	00

REVISIONS

P	LTR	DESCRIPTION	DATE	DWN	APVD
	H1	REVISED 1-2	03AUG2012	CZ	SZ
	H3	ADD NEW DASH NUMBER 1-3	30NOV2014	CZ	SZ
	H4	ADD NEW DASH NUMBER 1-4	02AUG2016	CZ	SZ
	H5	REV PER ECR-17-000673	17JAN2017	WY	SZ

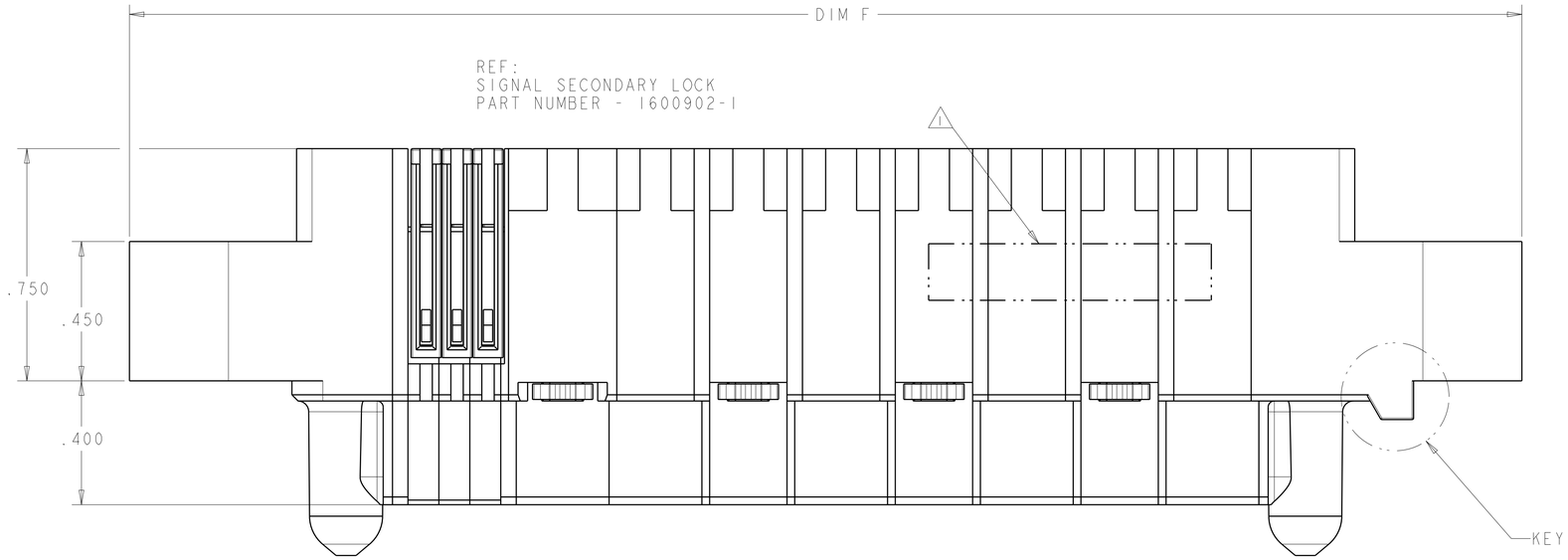

1. COMPANY TRADEMARK, PART NUMBER, AND DATE CODE TO BE MARKED IN AREA SHOWN. PARTS UNDER 2.00 LONG MAY BE MARKED ON BOTH SIDES.
2. MATERIAL: THERMO PLASTIC, UL94 V-0.
3. DATUM LOCATIONS AND BASIC DIMENSIONS TO BE ESTABLISHED BY THE CUSTOMER.
4. BULKHEAD THICKNESS RANGE: .031 - .100.
5. CONNECTOR MATED TO PANEL FROM OPPOSITE SIDE.
6. NO BURRS ALLOWED ON OPPOSITE (MATING) SIDE.
7. CONNECTOR KEEP OUT ZONE.
8. MOUNT CONNECTOR WITH TYCO HARDWARE KIT 1600914-1 FOR .050 (1.27mm) MIN RADIAL FLOAT.
9. VARIABLE DIMENSION SHOW ON VIEW (SHEET 2).
10. FOR THE CONFIGURATION OF 1-1600616-5,1-1600616-6,PLEASE REFER TO THE SHEET 4.

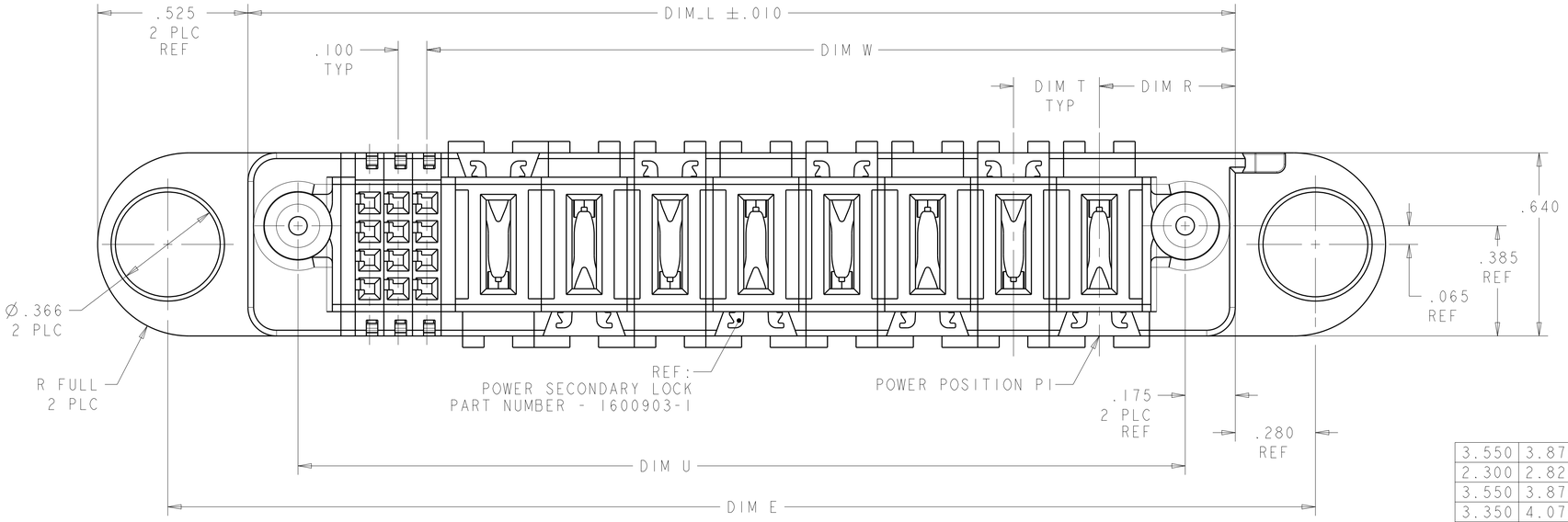

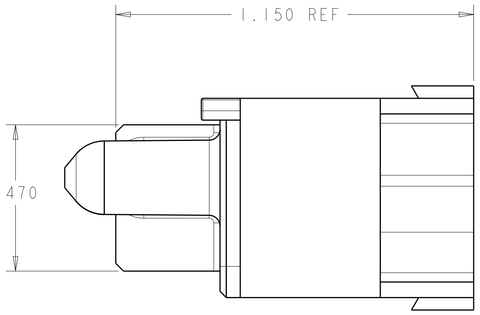

DIM W	DIM U	DIM T	DIM R	DIM L	DIM F	DIM E	DESCRIPTION	PART NUMBER
3.550	3.875	9	.475	4.225	5.275	4.785	3ACP + 9P + 16S	1-1600616-6
2.300	2.825	9	.475	3.175	4.225	3.735	3ACP + 4P + 24S	1-1600616-5
3.550	3.875	9	.475	4.225	5.275	4.785	3ACP + 9P + 16S	1-1600616-4
3.350	4.075	9	.450	4.425	5.475	4.985	4ACP + 9HDP + 32S	1-1600616-3
1.300	1.350	.300	.450	1.700	2.850	2.260	3ACP + 4S	1-1600616-2
1.175	1.300	.250	.450	1.650	2.700	2.210	3P + 8S	1-1600616-1
1.925	2.050	.250	.450	2.400	3.450	2.960	6P + 8S	1-1600616-0
1.325	1.500	.300	.475	1.850	2.900	2.410	3ACP + 8S	1600616-9
2.300	2.825	9	.475	3.175	4.225	3.735	3ACP + 4P + 24S	1600616-8
2.675	3.225	9	.525	3.575	4.625	4.135	3ACP + 6P + 24S	1600616-7
2.350	2.875	9	.475	3.225	4.275	3.785	3ACP + 4P + 24S	1600616-6
2.350	2.875	9	.475	3.225	4.275	3.785	3ACP + 4P + 24S	1600616-5
3.075	3.200	.300	.475	3.550	4.600	4.110	9ACP + 8S	1600616-4
2.375	2.550	9	.475	2.900	3.950	3.460	3ACP + 4P + 8S	1600616-3
3.925	4.700	.250	.450	5.050	6.100	5.610	14P + 32S + 0P	1600616-2
2.825	3.100	.300	.475	3.450	4.500	4.010	8ACP + 12S + 0P	1600616-1

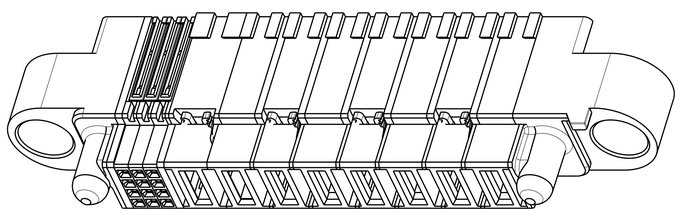

ISOMETRIC VIEW
SCALE 2:1

THIS DRAWING IS A CONTROLLED DOCUMENT.

DIMENSIONS: INCHES

TOLERANCES UNLESS OTHERWISE SPECIFIED:
0 PLC ±-
1 PLC ±-
2 PLC ±.01
3 PLC ±.005
4 PLC ±.0020
ANGLES ±2°

MATERIAL - 2
FINISH - -

DWN HAWMER 06JUL2004
CHK D TROUT 09JUL2004
APVD D TROUT -
PRODUCT SPEC 108-2157
APPLICATION SPEC 114-13112
WEIGHT -

TE Connectivity

NAME PLNEL MOUNT CABLE RECEPTACLE TYPE PS, WITH GUIDES MUTLI-BEAM XL

SIZE	CAGE CODE	DRAWING NO	RESTRICTED TO
A1	00779	C-1600616	-

CUSTOMER DRAWING | SCALE 4:1 | SHEET 1 OF 4 | REV H5

4805 (3/11)

THIS DRAWING IS UNPUBLISHED. RELEASED FOR PUBLICATION 20
© COPYRIGHT 20 - ALL RIGHTS RESERVED.

LOC	DIST
ES	00

REVISIONS

P	LTR	DESCRIPTION	DATE	DWN	APVD
	-	SEE SHEET 1	-	-	-

PART NUMBER	ROWS
1600616-1	D C B A
8ACP + 12S + 0P	

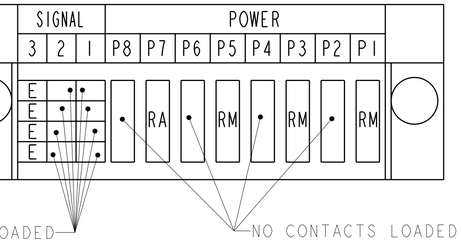

PART NUMBER	ROWS
1600616-6	D C B A
3ACP + 4P + 24S	

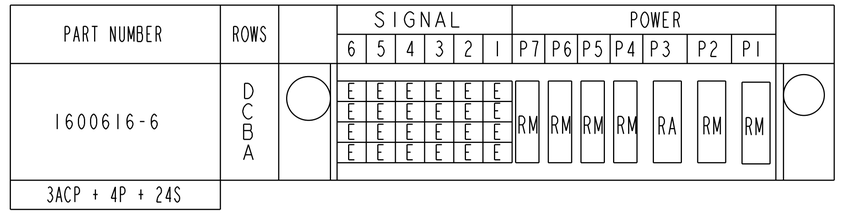

-6 HAS THE SAME DIM AS -5

PART NUMBER	ROWS
1600616-2	D C B A
14P + 32S + 0P	

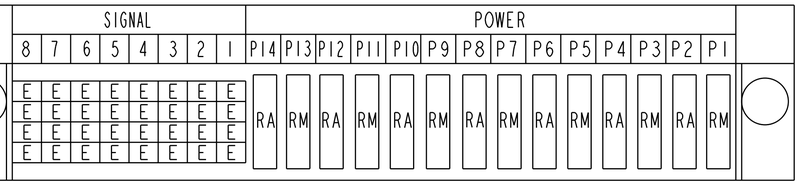

PART NUMBER	ROWS
1600616-3	D C B A
3ACP + 4P + 8S	

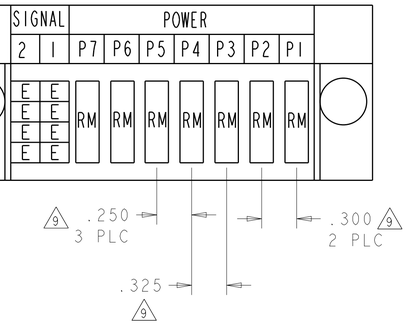

PART NUMBER	ROWS
1600616-4	D C B A
9ACP + 8S	

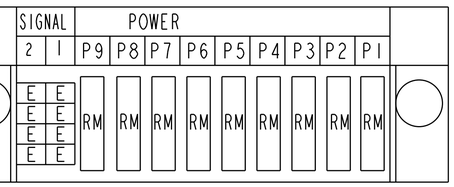

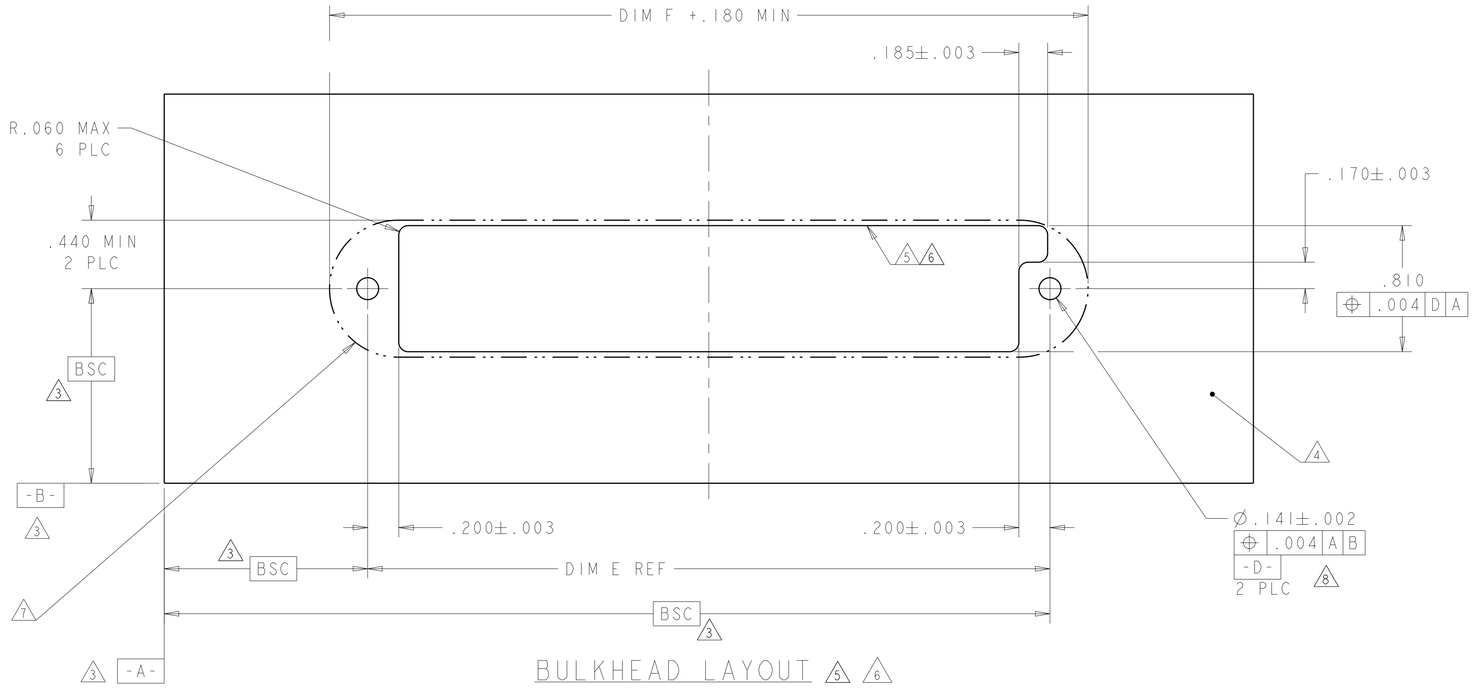

BULKHEAD LAYOUT 5 6

SCALE 2:1

PART NUMBER	ROWS
1600616-5	D C B A
3ACP + 4P + 24S	

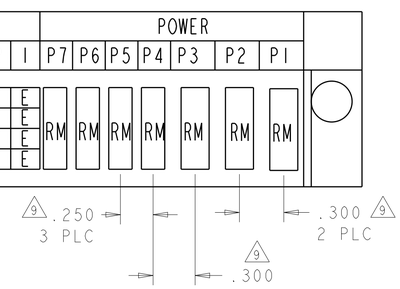

REFERENCE
WIRE CHART AND CONTACTS

HOUSING MODULE	CONTACT	INSULATION DIAMETER RANGE
.300 POWER	8-10 1600960 REF	[.176 - .272]
.250 POWER	8-10 1600960 REF	[.176 - .203]
	12-14 1600961 REF	[.156 - .176]
.200 POWER	12-14 1600961 REF	[.120 - .156]
.100 SIGNAL	22 - 26 531216-5 REF	[.036 - .069]

CODE	DESCRIPTION
RM	STANDARD POWER CONTACT
RA	MFBL POWER CONTACT
E	SIGNAL CONTACT

CONTACT TABLE

THIS DRAWING IS A CONTROLLED DOCUMENT.

DIMENSIONS: INCHES

TOLERANCES UNLESS OTHERWISE SPECIFIED:
0 PLC ±-
1 PLC ±-
2 PLC ±.01
3 PLC ±.005
4 PLC ±.0020
ANGLES ±2°

MATERIAL - -
FINISH - -

DWN HAWMER 06JUL2004
CHK D TROUT 09JUL2004
APVD D TROUT -
PRODUCT SPEC 108-2157
APPLICATION SPEC 114-13112
WEIGHT -

TE Connectivity

NAME PLNEL MOUNT CABLE RECEPTACLE TYPE PS, WITH GUIDES MUTLI-BEAM XL

SIZE	CAGE CODE	DRAWING NO	RESTRICTED TO
A1	00779	C-1600616	-

CUSTOMER DRAWING

SCALE	SHEET	OF	REV
4:1	2	4	H5

4805 (3/11)

THIS DRAWING IS UNPUBLISHED. RELEASED FOR PUBLICATION 20
© COPYRIGHT 20 - ALL RIGHTS RESERVED.

LOC	DIST
ES	00

REVISIONS

P	LTR	DESCRIPTION	DATE	DWN	APVD
	-	SEE SHEET 1	-	-	-

PART NUMBER	ROWS
1600616-7	D C B A
3ACP + 6P + 24S	

SIGNAL						POWER								
6	5	4	3	2	1	P9	P8	P7	P6	P5	P4	P3	P2	P1
E	E	E	E	E	E	RM	RM	RM	RM	RM	RM	RA	RM	RM
E	E	E	E	E	E									
E	E	E	E	E	E									
E	E	E	E	E	E									

9 .200 4PLC
.250 9
.300 3PLC 9

PART NUMBER	ROWS
1-1600616-1	D C B A
3P + 8S	

SIGNAL		POWER		
2	1	P3	P2	P1
E	E	RM	RM	RM
E	E			
E	E			
E	E			

PART NUMBER	ROWS
1600616-8	D C B A
3ACP + 4P + 24S	

SIGNAL						POWER						
6	5	4	3	2	1	P7	P6	P5	P4	P3	P2	P1
E	E	E	E	E	E	RM	RM	RM	RM	RA	RM	RM
E	E	E	E	E	E							
E	E	E	E	E	E							
E	E	E	E	E	E							

9 .250 3PLC
.300 2PLC 9
9 .300 3PLC

PART NUMBER	ROWS
1-1600616-2	D C B A
3P + 4S	

SIGNAL	POWER		
1	P3	P2	P1
E	RM	RA	RM

NO CONTACTS LOADED

PART NUMBER	ROWS
1600616-9	D C B A
3ACP + 8S	

SIGNAL		POWER		
2	1	P3	P2	P1
E	E	RM	RM	RM
E	E			
E	E			
E	E			

PART NUMBER	ROWS
1-1600616-3	D C B A
4ACP +9HDP + 32S	

SIGNAL								POWER												
8	7	6	5	4	3	2	1	P13	P12	P11	P10	P9	P8	P7	P6	P5	P4	P3	P2	P1
E	E	E	E	E	E	E	E	RM	RM	RA	RA	RA	RA	RM	RM	RM	RA	RM	RM	RM
E	E	E	E	E	E	E	E													
E	E	E	E	E	E	E	E													
E	E	E	E	E	E	E	E													

9 .200 9 PLC
.300 3 PLC 9

PART NUMBER	ROWS
1-1600616-0	D C B A
6P + 8S	

SIGNAL		POWER					
2	1	P6	P5	P4	P3	P2	P1
E	E	RM	RM	RM	RM	RM	RM
E	E						
E	E						
E	E						

PART NUMBER	ROWS
1-1600616-4	D C B A
3ACP + 9P + 16S	

SIGNAL				POWER											
4	3	2	1	P12	P11	P10	P9	P8	P7	P6	P5	P4	P3	P2	P1
E	E	E	E	RM	RM	RM	RM	RM	RM	RM	RM	RM	RM	RM	RM
E	E	E	E												
E	E	E	E												
E	E	E	E												

9 .250 8 PLC
.300 3 PLC 9

THIS DRAWING IS A CONTROLLED DOCUMENT.

DIMENSIONS: INCHES

TOLERANCES UNLESS OTHERWISE SPECIFIED:
0 PLC ±-
1 PLC ±-
2 PLC ±.01
3 PLC ±.005
4 PLC ±.0020
ANGLES ±2°

MATERIAL - -
FINISH - -

DWN HAWMER 06JUL2004
CHK D. TROUT 09JUL2004
APVD D. TROUT -
PRODUCT SPEC 108-2157
APPLICATION SPEC 114-13112
WEIGHT -

TE Connectivity

NAME PLNEL MOUNT CABLE RECEPTACLE TYPE PS, WITH GUIDES MUTLI-BEAM XL

SIZE	CAGE CODE	DRAWING NO	RESTRICTED TO
A1	00779	C-1600616	-

CUSTOMER DRAWING | SCALE 4:1 | SHEET 3 OF 4 | REV H5

4805 (3/11)

THIS DRAWING IS UNPUBLISHED. RELEASED FOR PUBLICATION 20
© COPYRIGHT 20 - ALL RIGHTS RESERVED.

LOC	DIST
ES	00

REVISIONS

P	LTR	DESCRIPTION	DATE	DWN	APVD

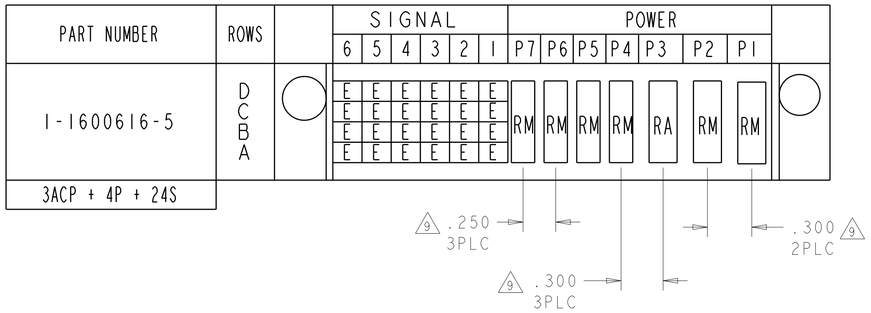

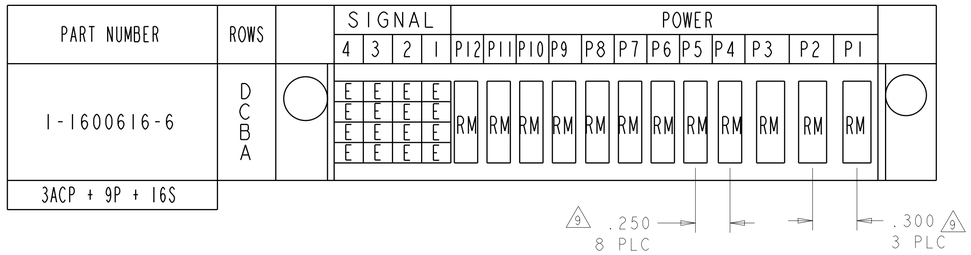

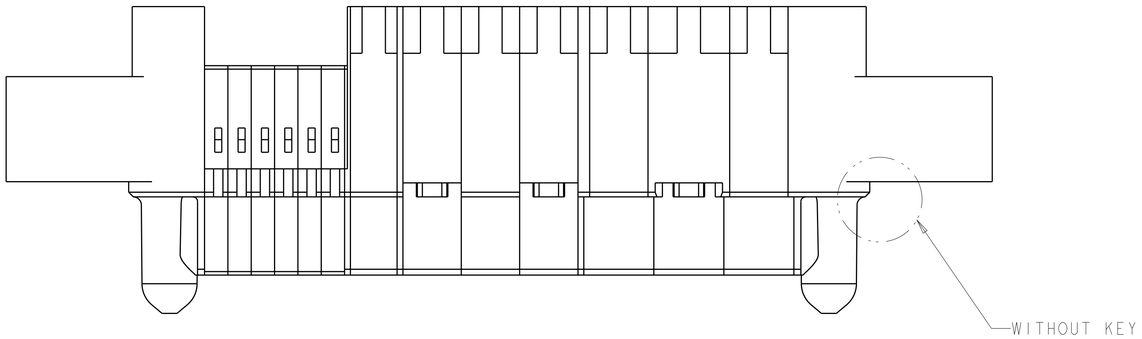

FOR THE CONFIGURATION WITHOUT KEY
PART NUMBER: 1-1600616-5, 1-1600616-6

THIS DRAWING IS A CONTROLLED DOCUMENT.

DIMENSIONS: INCHES

TOLERANCES UNLESS OTHERWISE SPECIFIED:
0 PLC ±-
1 PLC ±-
2 PLC ±.01
3 PLC ±.005
4 PLC ±.0020
ANGLES ±2°

MATERIAL - -
FINISH - -

DWN HAWMER 06JUL2004
CHK D TROUT 09JUL2004
APVD D TROUT -
PRODUCT SPEC 108-2157
APPLICATION SPEC 114-13112
WEIGHT -

TE Connectivity

NAME PLNEL MOUNT CABLE RECEPTACLE TYPE PS, WITH GUIDES MUTLI-BEAM XL

SIZE	CAGE CODE	DRAWING NO	RESTRICTED TO
A1	00779	C-1600616	-

CUSTOMER DRAWING

SCALE	SHEET	OF	REV
4:1	4	4	H5

4805 (3/11)

Общество с ограниченной ответственностью «МосЧип» ИНН 7719860671 / КПП 771901001
Адрес: 105318, г.Москва, ул.Щербаковская д.3, офис 1107

Данный компонент на территории Российской Федерации

Вы можете приобрести в компании MosChip.

Для оперативного оформления запроса Вам необходимо перейти по данной ссылке:

http://moschip.ru/get-element

Вы можете разместить у нас заказ для любого Вашего проекта, будь то серийное производство или разработка единичного прибора.

В нашем ассортименте представлены ведущие мировые производители активных и пассивных электронных компонентов.

Нашей специализацией является поставка электронной компонентной базы двойного назначения, продукции таких производителей как XILINX, Intel (ex.ALTERA), Vicor, Microchip, Texas Instruments, Analog Devices, Mini-Circuits, Amphenol, Glenair.

Сотрудничество с глобальными дистрибьюторами электронных компонентов, предоставляет возможность заказывать и получать с международных складов практически любой перечень компонентов в оптимальные для Вас сроки.

На всех этапах разработки и производства наши партнеры могут получить квалифицированную поддержку опытных инженеров.

Система менеджмента качества компании отвечает требованиям в соответствии с ГОСТ Р ИСО 9001, ГОСТ РВ 0015-002 и ЭС РД 009

Офис по работе с юридическими лицами:

105318, г.Москва, ул.Щербаковская д.3, офис 1107, 1118, ДЦ «Щербаковский»

Телефон: +7 495 668-12-70 (многоканальный)

Факс: +7 495 668-12-70 (доб.304)

E-mail: info@moschip.ru

Skype отдела продаж:
moschip.ru
moschip.ru_4
moschip.ru_6
moschip.ru_9