IEC Connectors

A full range of quality mains rated inlets, outlets and connectors conforming to IEC and EN 60320 specifications carrying UL, CSA, VDE and other approvals. With electrical ratings up to 20A, 250V (UL) these connector ranges offer solutions to most mains powered equipment and cable applications. The combinations of mounting styles and terminations include: flange fixing, snap to panel and PCB mounting versions together with 2.8/solder tabs, 4.8 and 6.3 faston tabs, screw terminal and PC spill versions. Completing the range are insulating boots, retaining clips and safety covers.

In addition to the standard black moulding, most styles are also available in either white or grey and special colours to match OEM equipment can also be supplied.

Type		Page
IEC Power Inlets & Connectors		
PX0587	Sheet C13 Rewirable	76
PX0587/SE	Sheet C13 Rewirable	76
PX0588	Sheet C13 Rewirable	76
PX0575	Sheet C14 Snap Fit	77
PX0579	Sheet C14 Vertical Flange	78
PX0580	Sheet C14 Flange/PC Mount	78
PX0580/PC	Sheet C14 PC Mount	79
PF0001	Sheet C14 Single Fuse	80
PF0002	Sheet C14 Single Fuse	80
PF0011	Sheet C14 Single Fuse	81
PF0030	Sheet C14 Twin Fuse	82
PF0033	Sheet C14 Twin Fuse	82
PX0597	Sheet C15 Hot Condition	83
PX0590	Sheet C16 Hot Condition	83
PX0595	Sheet C16 Hot Condition	83
PX0690	Sheet C18 Flange Mount	84
PX0691	Sheet C18 Snap Fit	84
PF0006	Sheet C18 Single Fuse	85
PF0007	Sheet C18 Single Fuse	85
PF0016	Sheet C18 Single Fuse	85

Type		Page
IEC Power Outlets & Plug Connectors		
PX0685	Sheet E Rewirable	86
PX0686	Sheet E Rewirable	86
PX0686/SE	Sheet E Rewirable	86
PX0716	Sheet F Snap Fit	87
PX0718	Sheet F Snap Fit	87
PX0717	Sheet F Snap Fit	88
PX0578	Flange Mount	88
PX0675	Sheet F Flange Mount	89
PX0695	Sheet F Snap Fit	90
PX0783	Sheet F Snap Fit Shuttered	91
PX0793	Sheet F Flange Mount Shuttered	91
PX0793/1	Sheet F Flange Mount Shuttered	91
PX0705	Sheet H Flange Mount	92
PX0725	Sheet H Snap Fit	92
IEC Power Inlets & Connectors - High Current		
PX0599	Sheet C19 Rewirable	93
PX0596	Sheet C20 Flange Mount	93
PX0598	Sheet C20 Snap Fit	93
IEC Power Outlets - High Current		
PX0591	Sheet J Flange Mount	94
PX0592	Sheet J Snap Fit	94
PX0594	Sheet I Cable Connector	94
Accessories		95-97

IEC60320 MAINS INLETS AND OUTLETS - PANEL MOUNTING

IEC60 320-1	Sheet No.	No. Pins	Current Rating	Flange Fixing	Snap fit	Fused Flange	Fused Snap fit	Filtered	Fused Filtered
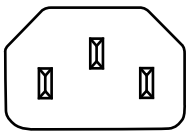	C14	3	10A, 250V a.c.	PX0579 PX0580 PX0580/PC PX0580/PC/12132 PX0580/PC/7 PX0580/PC/7LC	PX0575 PX0575/PC	PF0001 PF0001/PC PF0002 PF0030 PF0030/PC	PF0011 PF0011/PC PF0033	PS00 PS01	PS20 PS21 PS25 PS26
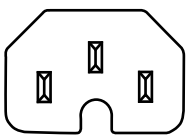	C16	3	10A, 250V a.c.	PX0590	PX0595				
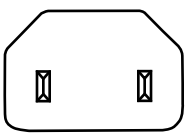	C18	2	10A, 250V a.c.	PX0690	PX0691 PX0691/PC	PF0006 PF0007	PF0016		
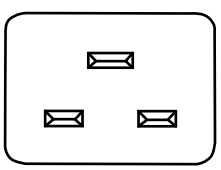	C20	3	16A, 250V a.c.	PX0596	PX0598				

IEC60 320-2-2	Sheet No.	No. Pins	Current Rating	Flange Fixing	Snap fit	Fused Flange	Fused Snap fit	Filtered	Fused Filtered
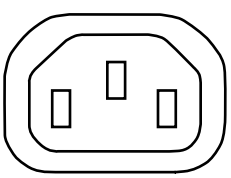	F	3	10A, 250V a.c.	PX0675 PX0675/PC PX0675/PC/12599 PX0793 (Shuttered) PX0793/1 (Shuttered)	PX0695 PX0695/PC PX0783 (Shuttered) PX0716 PX0717 PX0718				
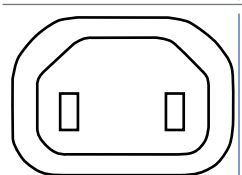	H	2	10A, 250V a.c.	PX0705	PX0725				
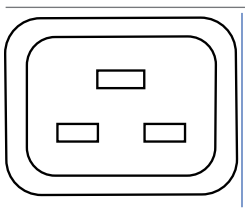	J	3	16A, 250V a.c.	PX0591	PX0592				

IEC60320 MAINS CONNECTORS & PLUG CONNECTORS - CABLE MOUNTING

IEC60 320-1	Sheet No.	No. Pins	Current Rating	Rewirable	Side Entry Rewirable
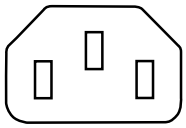	C13	3	10A, 250V a.c.	PX0587 PX0588	PX0587/SE
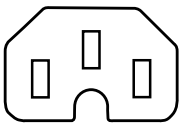	C15	3	10A, 250V a.c.	PX0597	
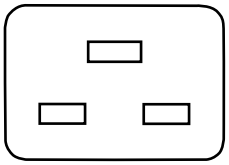	C19	3	16A, 250V a.c.	PX0599	

IEC60 320-2-2	Sheet No.	No. Pins	Current Rating	Rewirable	Side Entry Rewirable
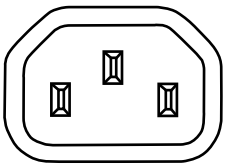	E	3	10A, 250V a.c.	PX0686	PX0685 PX0686/SE

EN60 320-1 Standard Sheet C13 Class I Rewirable Cold Condition

STRAIGHT FEMALE CONNECTOR

- Cable Mounting
- Rewirable
- Screw Terminals
- 10A, 250V a.c.

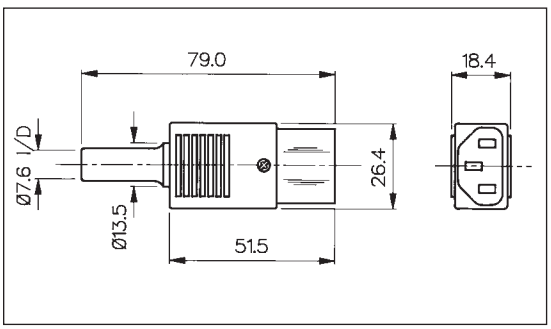

SIDE ENTRY FEMALE CONNECTOR

- Cable Mounting
- Rewirable
- Screw Terminals
- 10A, 250V a.c.

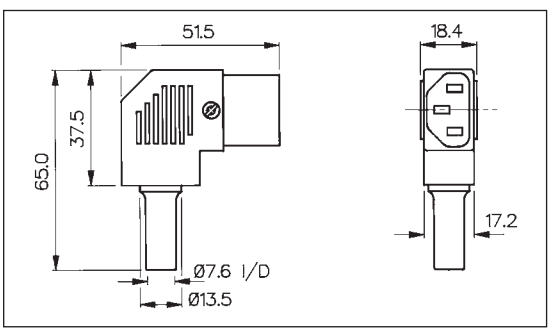

ANGLED FEMALE CONNECTOR

- Cable Mounting
- Rewirable
- Screw Terminals
- 10A, 250V a.c.

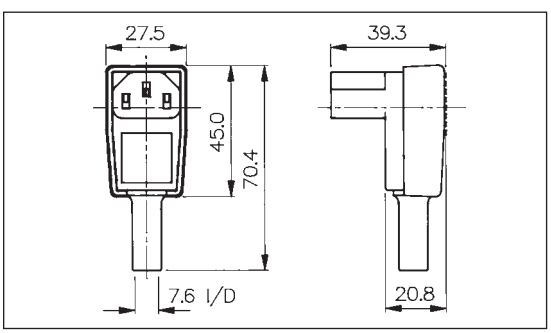

Specification	PX0587/Col	PX0587/SE/Col	PX0588
Terminations:	Screw Terminals	Screw Terminals	Screw Terminals
Colours:	No suffix (Black), /WH (White), /GY (Grey)	No suffix (Black), /WH (White), /GY (Grey)	-
Max. Rating:	10A, 250V a.c.	10A, 250V a.c.	10A, 250V a.c.
Contact Resistance:	<10mΩ	<10mΩ	<10mΩ
Insulation Resistance:	>10^3 MΩ	>10^3 MΩ	>10^3 MΩ
A.C. Breakdown:	Pole-Pole 4.5kV. (Poles-Accessible) Parts 4kV	Pole-Pole 4.5kV. (Poles-Accessible) Parts 4kV	Pole-Pole 5kV. (Poles-Accessible) Parts 3.5kV
Operating Temp. Range:	–40°C to +70°C	–40°C to +70°C	–40°C to +70°C
Withdrawal Force:	10N (Min.) 50N (Max.)	10N (Min.) 50N (Max.)	10N (Min.) 50N (Max.)
Mouldings:	Nylon, Flammability Rating UL94V-0	Nylon, Flammability Rating UL94V-0	Nylon, Flammability Rating UL94V-0
Contacts:	Brass, Clean	Brass, Clean	Brass, Clean
Approvals:			
Accessories / Notes:			
Mating Inlets:	PX0575, PX0579, PX0580, PF0001, PF0011, PF0030, PF0033	PX0575, PX0579, PX0580, PF0001, PF0011, PF0030, PF0033	PX0575, PX0579, PX0580, PF0001, PF0011, PF0030, PF0033
RoHS	Compliant	Compliant	Compliant

EN60 320-1 Standard Sheet C14 Class I Cold Condition

SNAP FIT TO PANEL INLET

- Fits Panel Sizes 1, 1.5, 2.0 or 3.0mm
- 2.8, 4.8, 6.3mm Tabs or Screw Terminals
- 10A, 250V a.c. (15A, 250V a.c. UL & CSA)

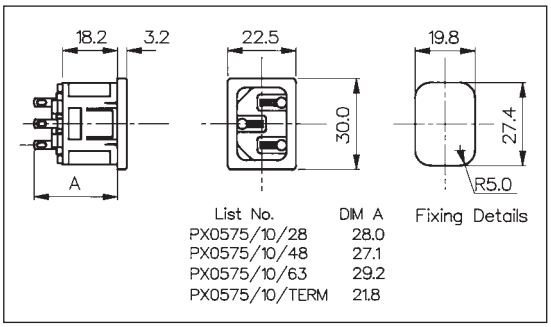

PC SNAP FIT TO PANEL INLET

- Fits Panel Sizes 1, 1.5, 2.0 or 3.0mm
- PC Spills
- 10A, 250V a.c. (15A, 250V a.c. UL & CSA)

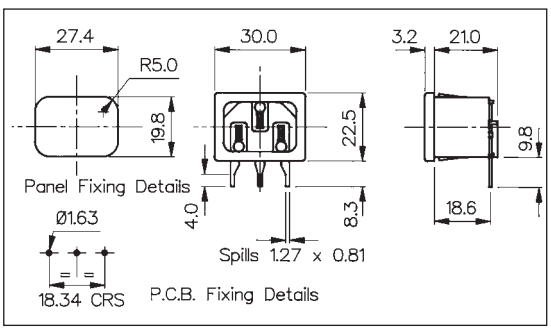

Specification	PX0575/Panel/Term/Col	PX0575/Panel/PC/Col
Fixing(Panel):	Snap fit, /10 (1mm), /15 (1.5mm), /20 (2mm), /30 (3mm)	Snap fit, /10 (1mm), /15 (1.5mm), /20 (2mm), /30 (3mm)
Terminations:	/28 (2.8mm solder), /48 (4.8mm tab) /63 (6.3mm tab), /TERM (screw)	P.C. Spills
Colours:	No suffix (Black), /WH (White), /GY (Grey)	No suffix (Black), /WH (White), /GY (Grey)
Max. Rating:	10A, 250V a.c. (UL & CSA 15A, 250V a.c.)	10A, 250V a.c. (UL & CSA 15A, 250V a.c.)
Contact Resistance:	<10mΩ	<10mΩ
Insulation Resistance:	>10^3 MΩ	>10^3 MΩ
A.C. Breakdown:	Pole-Pole 5kV. Poles-Panel 5.4kV	Pole-Pole 5kV. Poles-Panel 5.4kV
Operating Temp. Range:	–40°C to +70°C	–40°C to +70°C
Max. Pin Temp.:	+70°C	+70°C
Mouldings:	Nylon, Flammability Rating UL94V-0	Nylon, Flammability Rating UL94V-0
Contacts:	Brass: Pins, Nickel Plated. Tabs, Tin Plated, Screw Terms, Nickel Plated	Brass: Pins, Nickel Plated. Spills, Tin Plated
Approvals:		
Accessories / Notes:	P.No. 11328 (See Page 97)	Standard without cover. With cover add /C to P.No.
Mating Connectors:	PX0587, PX0587/SE, PX0588	PX0587, PX0587/SE, PX0588
RoHS	Compliant	Compliant

EN60 320-1 Standard Sheet C14 Class I Cold Condition

FLANGE MOUNT INLET

- 2.8, 4.8, 6.3mm Tabs or Screw Terminals
- 10A, 250V a.c. (15A, 250V a.c. UL & CSA)

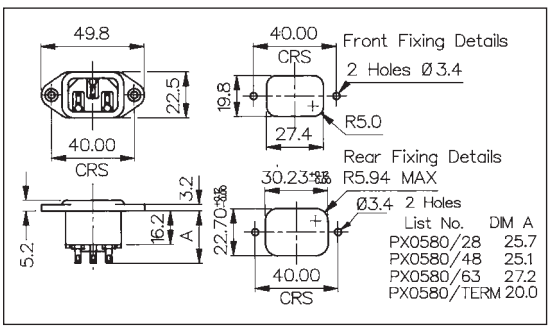

VERTICAL FLANGE MOUNT INLET

- 2.8, 4.8, 6.3mm Tabs or Screw Terminals
- 10A, 250V a.c. (15A, 250V a.c. UL & CSA)

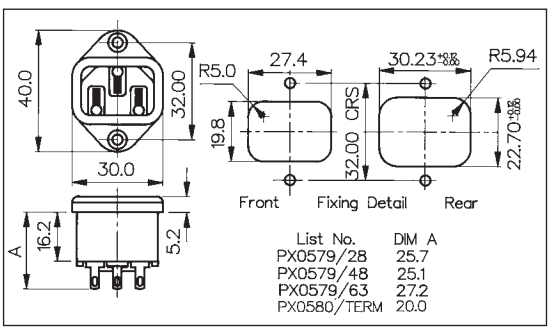

Specification	PX0580/Term/Col	PX0579/Term/Col
Fixing:	Flange	Flange
Terminations:	/28 (2.8mm solder), /48 (4.8mm tab) /63 (6.3mm tab), /TERM (screw)	/28 (2.8mm solder), /48 (4.8mm tab) /63 (6.3mm tab)
Colours:	No suffix (Black), /WH (White), /GY (Grey)	No suffix (Black), /WH (White), /GY (Grey)
Max. Rating:	10A, 250V a.c. (UL & CSA 15A, 250V a.c.)	10A, 250V a.c. (UL & CSA 15A, 250V a.c.)
Contact Resistance:	<10mΩ	<10mΩ
Insulation Resistance:	>10^3 MΩ	>10^3 MΩ
A.C. Breakdown:	Pole-Pole 5kV. Poles-Panel 10kV	Pole-Pole 5kV. Poles-Panel 10kV
Operating Temp. Range:	–40°C to +70°C	–40°C to +70°C
Max. Pin Temp.:	+70°C	+70°C
Mouldings:	Nylon, Flammability Rating UL94V-0	Nylon, Flammability Rating UL94V-0
Contacts:	Brass: Pins, Nickel Plated. Tabs, Tin Plated, Screw Terms, Nickel Plated	Brass: Pins, Nickel Plated. Tabs, Tin Plated
Approvals:		
Accessories / Notes:	P.No. 11328, KT0006 (PX0587 only) (See Pages 95 and 97)	P.No. 11328 (See Page 97)
Mating Connectors:	PX0587, PX0587/SE, PX0588	PX0587, PX0587/SE, PX0588
RoHS	Compliant	Compliant

EN60 320-1 Standard Sheet C14 Class I Cold Condition

PC FLANGE REAR MOUNT INLET

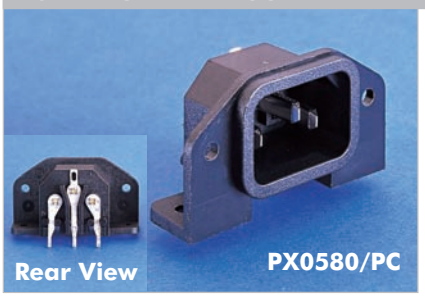

- With or Without Rear Cover
- PC Spills
- 10A, 250V a.c.
  (15A, 250V a.c. UL & CSA)

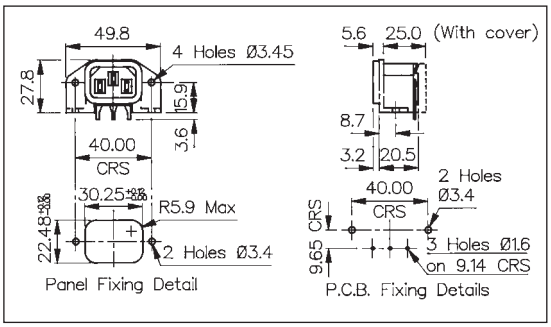

PC FLANGE REAR MOUNT INLET

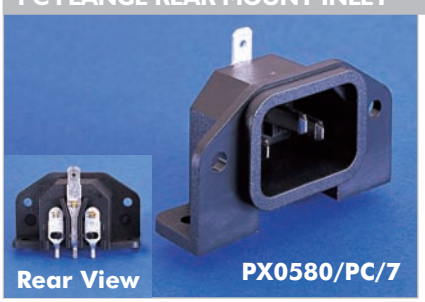

- With or Without Cover
- PC Spills
- 4.8mm Top Tab (earth)
- 10A, 250V a.c.
  (15A, 250V a.c. UL & CSA)

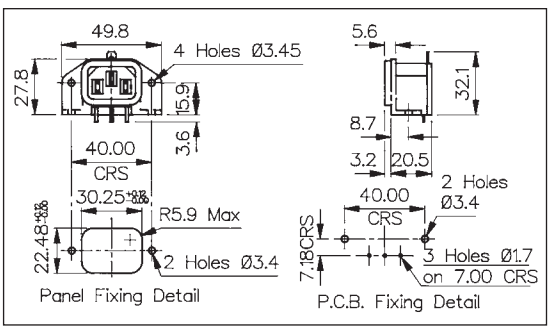

Specification	PX0580/PC/Col	PX0580/PC/7/Col
Fixing:	P.C.B./Flange	P.C.B./Flange
Terminations:	P.C. Spills	P.C. Spills
Colours:	No suffix (Black), /WH (White), /GY (Grey)	No suffix (Black), /WH (White), /GY (Grey)
Max. Rating:	10A, 250V a.c. (UL & CSA 15A, 250V a.c.)	10A, 250V a.c. (UL & CSA 15A, 250V a.c.)
Contact Resistance:	<10mΩ	<10mΩ
Insulation Resistance:	>10^3 MΩ	>10^3 MΩ
A.C. Breakdown:	Pole-Pole 5.4kV. Poles-Panel 10kV	Pole-Pole 4kV. Poles-Panel 6kV
Operating Temp. Range:	–40°C to +70°C	–40°C to +70°C
Max. Pin Temp.:	+70°C	+70°C
Mouldings:	Nylon, Flammability Rating UL94V-0	Nylon, Flammability Rating UL94V-0
Contacts:	Brass: Pins, Nickel Plated. Spills, Tin Plated	Brass: Pins, Nickel Plated. Spills, Tin Plated
Approvals:		
Accessories / Notes:	Standard without cover. With cover add /12132 to P.No.	Standard with cover. Without cover add LC to P.No.
Mating Connectors:	PX0587, PX0587/SE, PX0588	PX0587, PX0587/SE, PX0588
RoHS	Compliant	Compliant

EN60 320-1 Standard Sheet C14 Class I Cold Condition (Fused)

FLANGE MOUNT FUSED INLET

- Single Fuse 5 x 20mm
- Spare Fuse Facility
- 2.8, 4.8 or 6.3mm Tabs
- 10A, 250V a.c.
- Fuse Contacts Isolated (PF0002)

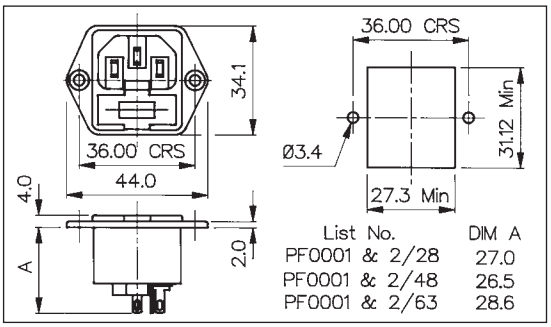

PC FLANGE MOUNT FUSED INLET

- Single Fuse 5 x 20mm
- Spare Fuse Facility
- PC Spills - Horizontal
- 10A, 250V a.c.

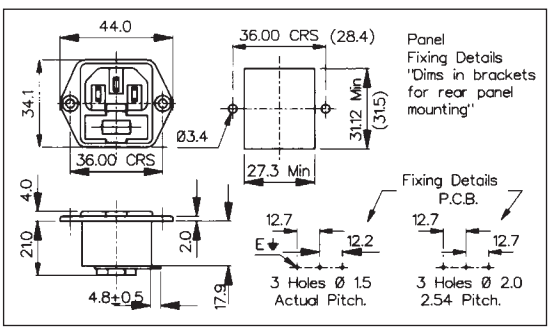

Specification	PF0001/Term/Col	PF0001/PC/Col	PF0002/Term/Col
Fixing:	Flange	P.C.B./Flange	Flange
Terminations:	/28 (2.8mm solder), /48 (4.8mm tab) /63 (6.3mm tab)	P.C. Spills	/28 (2.8mm solder), /48 (4.8mm tab) /63 (6.3mm tab)
Colours:	No suffix (Black), /WH (White), /GY (Grey)	No suffix (Black), /WH (White), /GY (Grey)	No suffix (Black), /WH (White), /GY (Grey)
Max. Rating:	10A, 250V a.c.	10A, 250V a.c.	10A, 250V a.c.
Max. Fuse Rating:	2.5W/10A, 250V a.c.	2.5W/10A, 250V a.c	2.5W/10A, 250V a.c
Contact Resistance:	<10mΩ (<15mΩ including Fuseholder)	<10mΩ (<15mΩ including Fuseholder)	<10mΩ
Insulation Resistance:	$>10^3$ MΩ	$>10^3$ MΩ	$>10^3$ MΩ
A.C. Breakdown:	Pole-Pole 5.5kV. Poles-Panel 4kV	Pole-Pole 5.5kV. Poles-Panel 4kV	Pole-Pole 5.5kV. Poles-Panel 4kV
Operating Temp. Range:	–40°C to +70°C	–40°C to +70°C	–40°C to +70°C
Max. Pin Temp.:	+70°C	+70°C	+70°C
Mouldings:	Nylon, Flammability Rating UL94V-0	Nylon, Flammability Rating UL94V-0	Nylon, Flammability Rating UL94V-0
Contacts:	Brass: Pins, Nickel Plated. Tabs, Tin Plated	Brass: Pins, Nickel Plated. Tabs, Tin Plated	Brass: Pins, Nickel Plated. Tabs, Tin Plated
Approvals:			
Accessories / Notes:	P.No. 11987, KT0009 (See Pages 95 & 97)	KT0009 (front of panel mounting only) (See Page 95)	P.No. 11987, KT0009 (See Pages 95 & 97) (Note: Fuse contact isolated)
Mating Connectors:	PX0587, PX0587/SE, PX0588	PX0587, PX0587/SE, PX0588	PX0587, PX0587/SE, PX0588
RoHS	Compliant	Compliant	Compliant

EN60 320-1 Standard Sheet C14 Class I Cold Condition (Fused)

SNAP FIT TO PANEL FUSED INLET

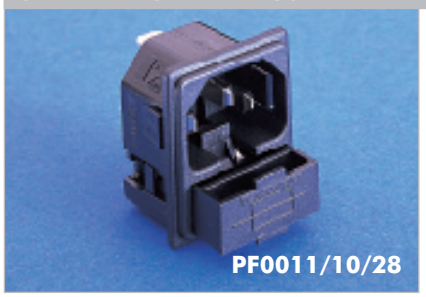

- Single Fuse 5 x 20mm
- Spare Fuse Facility
- Panel Sizes 1, 1.5, 2.0 or 3.0mm
- 2.8, 4.8 or 6.3mm Tabs
- 10A, 250V a.c.

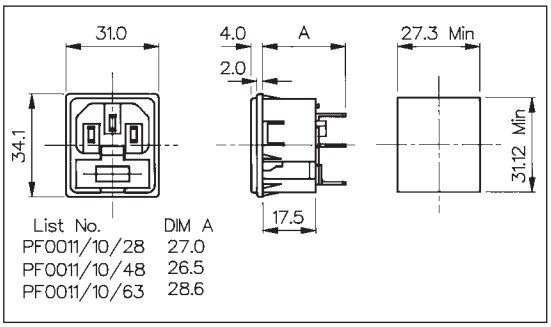

PC SNAP FIT TO PANEL FUSED INLET

- Single Fuse 5 x 20mm
- Spare Fuse Facility
- Panel Sizes 1, 1.5, 2.0 or 3.0mm
- PC Spills
- 10A, 250V a.c.

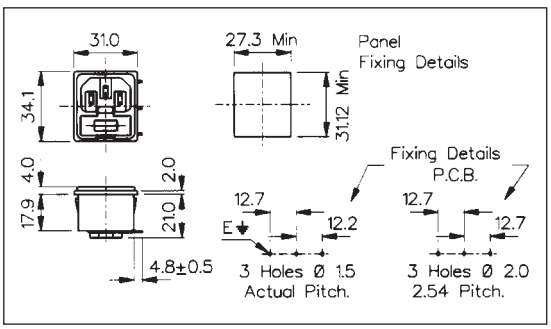

Specification	PF0011/Panel/Term/Col	PF0011/Panel/PC/Col
Fixing(Panel):	Snap fit, /10 (1mm), /15 (1.5mm), /20 (2mm), /30 (3mm)	Snap fit, /10 (1mm), /15 (1.5mm), /20 (2mm), /30 (3mm)
Terminations:	/28 (2.8mm solder), /48 (4.8mm tab) /63 (6.3mm tab)	P.C. Spills
Colours:	No suffix (Black), /WH (White), /GY (Grey)	No suffix (Black), /WH (White), /GY (Grey)
Max. Rating:	10A, 250V a.c.	10A, 250V a.c.
Max. Fuse Rating:	2.5W/10A, 250V a.c	2.5W/10A, 250V a.c
Contact Resistance:	<10mΩ (<15mΩ including Fuseholder)	<10mΩ (<15mΩ including Fuseholder)
Insulation Resistance:	$>10^3$ MΩ	$>10^3$ MΩ
A.C. Breakdown:	Pole-Pole 5.5kV. Poles-Panel 4kV	Pole-Pole 5.5kV. Poles-Panel 4kV
Operating Temp. Range:	–40°C to +70°C	–40°C to +70°C
Max. Pin Temp.:	+70°C	+70°C
Mouldings:	Nylon, Flammability Rating UL94V-0	Nylon, Flammability Rating UL94V-0
Contacts:	Brass: Pins, Nickel Plated. Tabs, Tin Plated	Brass: Pins, Nickel Plated. Spills, Tin Plated
Approvals:		
Accessories / Notes:	P.No. 11987 (See Page 97)	
Mating Connectors:	PX0587, PX0587/SE, PX0588	PX0587, PX0587/SE, PX0588
RoHS	Compliant	Compliant

EN60 320-1 Standard Sheet C14 Class I Cold Condition (Fused, Twin)

FLANGE MOUNT FUSED INLET

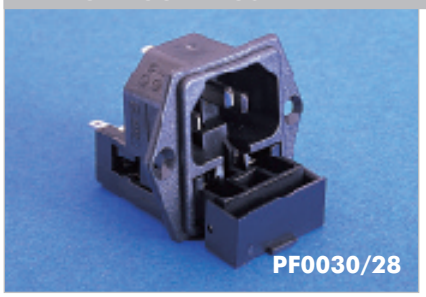

- Twin Fused 5 x 20mm
- 2.8, 4.8 or 6.3mm Tabs
- 10A, 250V a.c.

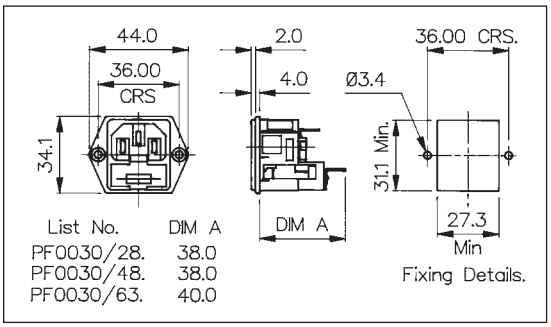

PC FLANGE MOUNT FUSED INLET

- Twin Fused 5 x 20mm
- PC Spills
- 10A, 250V a.c.

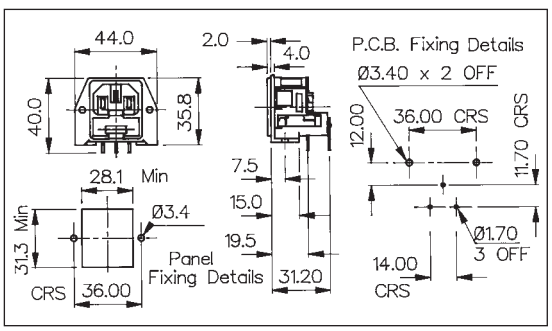

SNAP FIT TO PANEL FUSED INLET

- Twin Fused 5 x 20mm
- Fits Panel Sizes 1.0, 1.5, 2.0 or 3.0mm
- 2.8, 4.8 or 6.3mm Tabs
- 10A, 250V a.c.

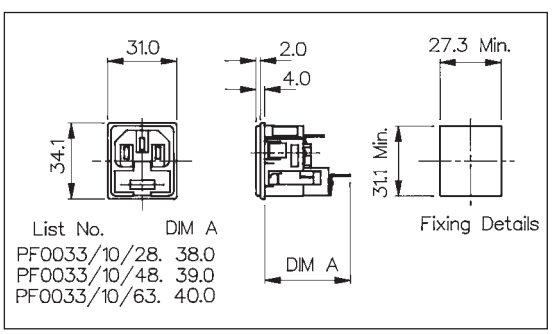

Specification	PF0030/Termination	PF0030/PC	PF0033/Panel/Termination
Fixing (Panel):	Flange	P.C.B/Flange	Snap fit, /10 (1mm), /15 (1.5mm), /20 (2mm), /30 (3mm)
Terminations:	/28 (2.8mm solder), /48 (4.8mm tab) /63 (6.3mm tab)	P.C. Spills	/28 (2.8mm solder), /48 (4.8mm tab) /63 (6.3mm tab)
Max. Rating:	10A, 250V a.c.	10A, 250V a.c.	10A, 250V a.c.
Contact Resistance:	<15mΩ (per pole)	<15mΩ (per pole)	<15mΩ (per pole)
Insulation Resistance:	$>10^4$ MΩ	$>10^4$ MΩ	$>10^4$ MΩ
A.C. Breakdown:	Pole-Pole 6kV. Poles-Panel 5kV	Pole-Pole 6kV. Poles-Panel 5kV	Pole-Pole 6kV. Poles-Panel 5kV
Max. Dissipation Per Fuse:	2.5W	2.5W	2.5W
Operating Temp. Range:	–20°C to +70°C	–20°C to +70°C	–20°C to +70°C
Max. Pin Temp.:	+70°C	+70°C	+70°C
Mouldings:	Nylon, Flammability Rating UL94V-0	Nylon, Flammability Rating UL94V-0	Nylon, Flammability Rating UL94V-0
Contacts:	Brass: Pins, Nickel Plated. Tabs, Tin Plated	Brass: Pins, Nickel Plated. Tabs, Tin Plated	Brass: Pins, Nickel Plated. Tabs, Tin Plated
Approvals:			
Accessories / Notes:	KT0009 (See Page 95)		
Mating Connectors:	PX0587, PX0587/SE, PX0588	PX0587, PX0587/SE, PX0588	PX0587, PX0587/SE, PX0588
RoHS	Compliant	Compliant	Compliant

EN60 320-1 Standard Sheet C15 Class I & Standard Sheet C16 Class I Hot Condition

STRAIGHT FEMALE CONNECTOR

- Cable Mounting
- Hot Condition
- Mates with PX0590 and PX0595
- Screw Terminals
- 10A, 250V a.c.

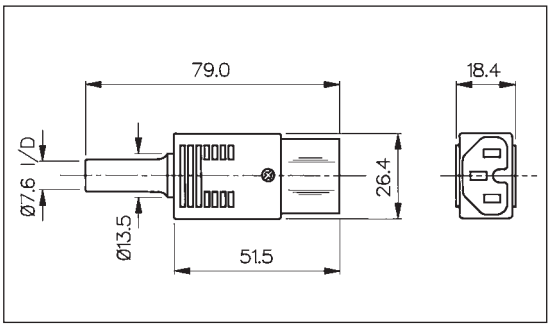

FLANGE MOUNT INLET

- Hot Condition
- 2.8 or 6.3mm Tabs
- 10A, 250V a.c. (15A, 250V a.c. UL & CSA)

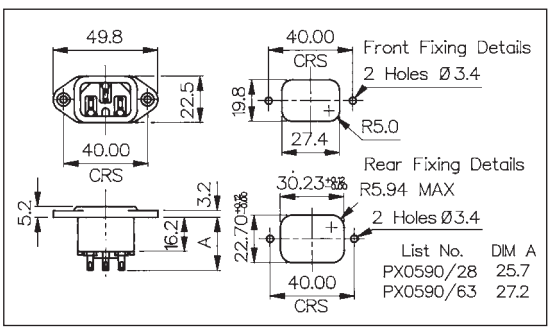

SNAP FIT TO PANEL INLET

- Hot Condition
- Panel Sizes 1, 1.5, 2.0 or 3.0mm
- 2.8, 4.8, 6.3mm Tabs or Screw Terminals
- 10A, 250V a.c. (15A, 250V a.c. UL & CSA)

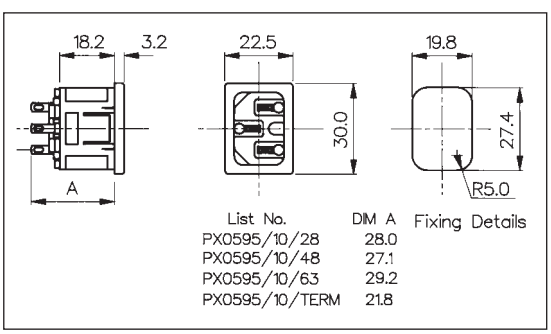

Specification	PX0597/Col	PX0590/Term/Col	PX0595/Panel/Term/Col
Fixing (Panel):		Flange	Snap fit, /10 (1mm), /15 (1.5mm), /20 (2mm), /30 (3mm)
Terminations:	Screw Terminals	/28 (2.8mm solder), /63 (6.3mm tab)	/28 (2.8mm solder), /48 (4.8mm tab) /63 (6.3mm tab), /TERM (screw)
Colours:	No suffix (Black), /WH (White), /GY (Grey)	No suffix (Black), /WH (White), /GY (Grey)	No suffix (Black), /WH (White), /GY (Grey)
Max. Rating:	10A, 250V a.c.	10A, 250V a.c. (UL & CSA 15A, 250V a.c.)	10A, 250V a.c. (UL & CSA 15A, 250V a.c.)
Contact Resistance:	<10mΩ	<10mΩ	<10mΩ
Insulation Resistance:	>10^3 MΩ	>10^3 MΩ	>10^3 MΩ
A.C. Breakdown:	Pole-Pole 4.5kV. Poles-Accessible Parts 4kV	Pole-Pole 5kV. Poles-Panel 10kV	Pole-Pole 5kV. Poles-Panel 5.4kV
Operating Temp. Range:	–40°C to +70°C	–40°C to +70°C	–40°C to +70°C
Max. Pin Temp.:		+120°C	+120°C
Withdrawal Force:	10N (Min.) 50N (Max.)		
Mouldings:	Nylon, Flammability Rating UL94V-0	Nylon, Flammability Rating UL94V-0	Nylon, Flammability Rating UL94V-0
Contacts:	Brass, Clean	Brass, Pins Nickel Plated. Tabs, Tin Plated	Brass, Pins Nickel Plated. Tabs, Tin Plated
Approvals:			
Accessories/Notes:		P.No. 11328, KT0006 (See Pages 95 & 97)	P.No. 11328 (See Page 97)
Mating Connectors:	PX0590, PX0595	PX0597	PX0597
RoHS	Compliant	Compliant	Compliant

EN60 320-1 Standard Sheet C18 Class II Cold Condition

FLANGE MOUNT INLET

- Two Pin Class II (No Earth Pin)
- 2.8, 4.8, 6.3mm Tabs or Screw Terminals
- 10A, 250V a.c. (15A, 250V a.c. UL & CSA)

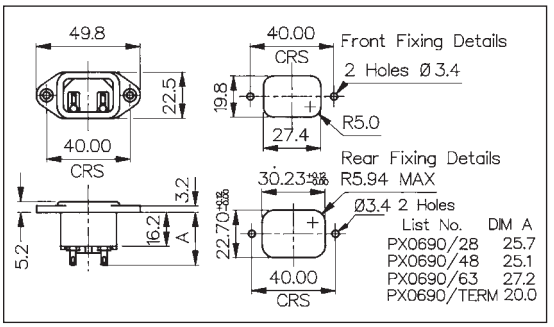

SNAP FIT TO PANEL INLET

- Two Pin Class II (No Earth Pin)
- Panel Sizes 1, 1.5, 2.0 or 3.0mm
- 2.8, 4.8, 6.3mm Tabs or Screw Terminals
- 10A, 250V a.c. (15A, 250V a.c. UL & CSA)

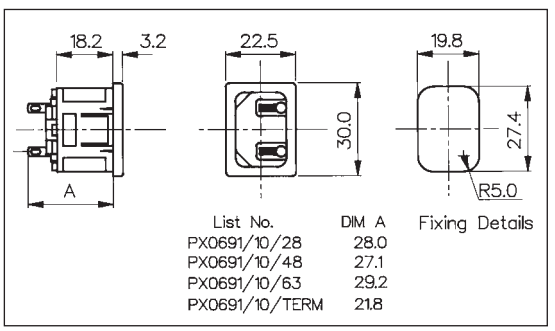

PC SNAP FIT TO PANEL INLET

- Two Pin Class II (No Earth Pin)
- Panel Sizes 1, 1.5, 2.0 or 3.0mm
- PC Spills
- 10A, 250V a.c. (15A, 250V a.c. UL & CSA)

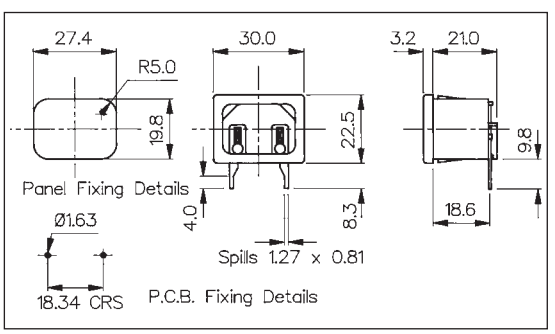

Specification	PX0690/Term/Col	PX0691/Panel/Term/Col	PX0691/Panel/PC/Col
Fixing(Panel):	Flange	Snap fit, /10 (1mm), /15 (1.5mm), /20 (2mm), /30 (3mm)	Snap fit, /10 (1mm), /15 (1.5mm), /20 (2mm), /30 (3mm)
Terminations:	/28 (2.8mm solder), /48 (4.8mm tab) /63 (6.3mm tab), /TERM (screw)	/28 (2.8mm solder), /48 (4.8mm tab) /63 (6.3mm tab), /TERM (screw)	P.C. Spills
Colours:	No suffix (Black), /WH (White), /GY (Grey)	No suffix (Black), /WH (White), /GY (Grey)	No suffix (Black), /WH (White), /GY (Grey)
Max. Rating:	10A, 250V a.c. (UL & CSA 15A, 250V a.c.)	10A, 250V a.c. (UL & CSA 15A, 250V a.c.)	10A, 250V a.c. (UL & CSA 15A, 250V a.c.)
Contact Resistance:	<10mΩ	<10mΩ	<10mΩ
Insulation Resistance:	>10^3 MΩ	>10^3 MΩ	>10^3 MΩ
A.C. Breakdown:	Pole-Pole 5kV. Poles-Panel 10kV	Pole-Pole 5kV. Poles-Panel 5.4kV	Pole-Pole 5kV. Poles-Panel 5.4kV
Operating Temp. Range:	–40°C to +70°C	–40°C to +70°C	–40°C to +70°C
Max. Pin Temp.:	+70°C	+70°C	+70°C
Mouldings:	Nylon, Flammability Rating UL94V-0	Nylon, Flammability Rating UL94V-0	Nylon, Flammability Rating UL94V-0
Contacts:	Brass: Pins, Nickel Plated. Tabs, Tin Plated, Screw Terms, Nickel Plated	Brass: Pins, Nickel Plated. Tabs, Tin Plated, Screw Terms, Nickel Plated	Brass: Pins, Nickel Plated. Spills, Tin Plated
Approvals:			
Accessories / Notes:	P.No. 11328 (See Page 97)	P.No. 11328 (See Page 97)	Standard without cover. With cover add /C to P.No.
Mating Connectors:			
RoHS	Compliant	Compliant	Compliant

EN60 320-1 Standard Sheet C18 Class II Cold Condition (Fused)

FLANGE MOUNT FUSED INLET

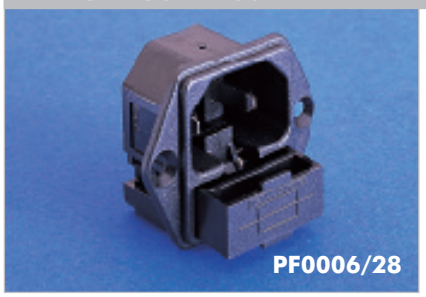

- Single Fuse 5 x 20mm
- Two Pin Class II (No Earth Pin)
- 2.8, 4.8 or 6.3mm Tabs
- 10A, 250V a.c.

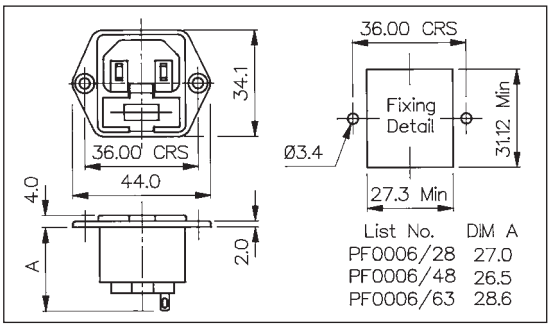

FLANGE MOUNT FUSED INLET

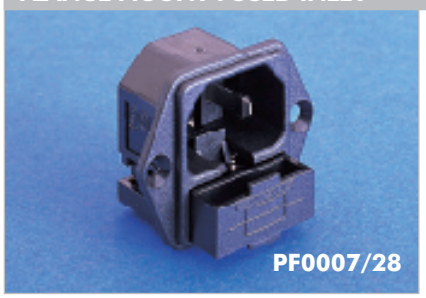

- Single Fuse 5 x 20mm (Fuse Contacts Isolated)
- Two Pin Class II (No Earth Pin)
- 2.8, 4.8 or 6.3mm Tabs
- 10A, 250V a.c.

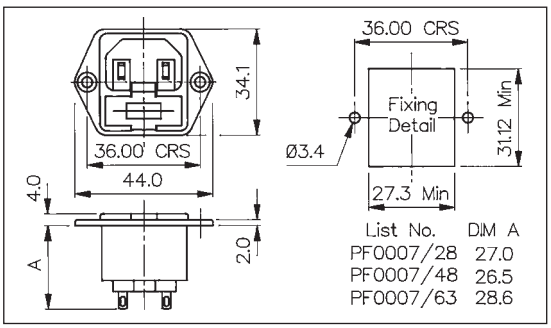

SNAP FIT TO PANEL FUSED INLET

- Single Fuse 5 x 20mm
- Two Pin Class II (No Earth Pin)
- Fits Panel Sizes 1.0, 1.5, 2.0 or 3.0mm
- 2.8, 4.8 or 6.3mm Tabs
- 10A, 250V a.c.

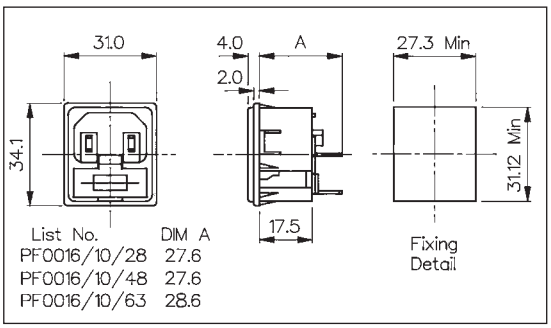

Specification	PF0006/Term/Col	PF0007/Term/Col	PF0016/Panel/Term/Col
Fixing (Panel):	Flange	Flange	Snap fit, /10 (1mm), /15 (1.5mm), /20 (2mm), /30 (3mm)
Terminations:	/28 (2.8mm solder), /48 (4.8mm tab) /63 (6.3mm tab)	/28 (2.8mm solder), /48 (4.8mm tab) /63 (6.3mm tab)	/28 (2.8mm solder), /48 (4.8mm tab) /63 (6.3mm tab)
Colours:	No suffix (Black), /WH (White), /GY (Grey)	No suffix (Black), /WH (White), /GY (Grey)	No suffix (Black), /WH (White), /GY (Grey)
Max. Rating:	10A, 250V a.c.	10A, 250V a.c.	10A, 250V a.c.
Contact Resistance:	<10mΩ (<15mΩ including Fuseholder)	<10mΩ	<10mΩ (<15mΩ including Fuseholder)
Insulation Resistance:	$>10^3$ MΩ	$>10^3$ MΩ	$>10^3$ MΩ
A.C. Breakdown:	Pole-Pole 5.5kV. Poles-Panel 4kV	Pole-Pole 5.5kV. Poles-Panel 4kV	Pole-Pole 5.5kV. Poles-Panel 4kV
Operating Temp. Range:	–40°C to +70°C	–40°C to +70°C	–40°C to +70°C
Max. Pin Temp.:	+70°C	+70°C	+70°C
Mouldings:	Nylon, Flammability Rating UL94V-0	Nylon, Flammability Rating UL94V-0	Nylon, Flammability Rating UL94V-0
Contacts:	Brass: Pins, Nickel Plated. Tabs, Tin Plated	Brass: Pins, Nickel Plated. Tabs, Tin Plated	Brass: Pins, Nickel Plated. Tabs, Tin Plated
Approvals:			
Accessories / Notes:	P.No. 11987 (See Page 97)	P.No. 11987 (See Page 97) (Note: Fuse contacts isolated)	P.No. 11987 (See Page 97)
Mating Connectors:			
RoHS	Compliant	Compliant	Compliant

EN60 320-2-2 Standard Sheet E Class I Rewirable

ANGLED MALE CONNECTOR

- Cable Mounting
- Four Position Cable Entry
- Rewirable
- Screw Terminals
- 10A, 250V a.c.

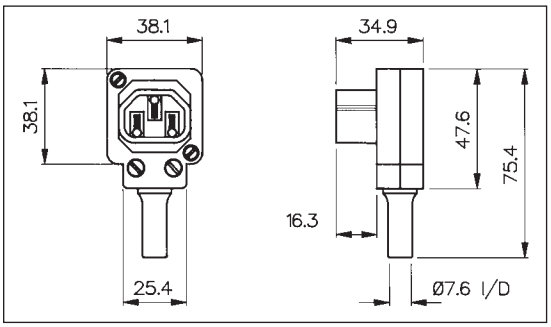

STRAIGHT MALE CONNECTOR

- Cable Mounting
- Rewirable
- Screw Terminals
- 10A, 250V a.c.

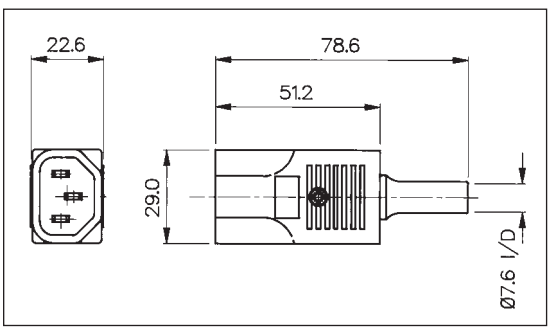

SIDE ENTRY MALE CONNECTOR

- Cable Mounting
- Rewirable
- Screw Terminals
- 10A, 250V a.c.

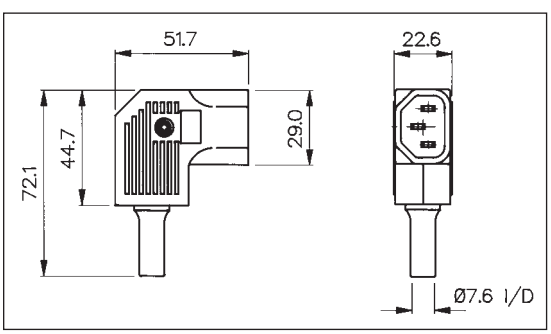

Specification	PX0685/Col	PX0686/Col	PX0686/SE/Col
Terminations:	Screw Terminals	Screw Terminals	Screw Terminals
Max. Rating:	10A, 250V a.c.	10A, 250V a.c.	10A, 250V a.c.
Colours:	No suffix (Black), /WH (White), /GY (Grey)	No suffix (Black), /WH (White), /GY (Grey)	No suffix (Black), /WH (White), /GY (Grey)
Contact Resistance:	<10mΩ	<10mΩ	<10mΩ
Insulation Resistance:	>10^4 MΩ	>10^4 MΩ	>10^4 MΩ
A.C. Breakdown:	Pole-Pole 5.2kV. Poles-Accessible Parts 6kV	Pole-Pole 5kV. Poles-Accessible Parts 5kV	Pole-Pole 5kV. Poles-Accessible Parts 5kV
Operating Temp. Range:	–40°C to +70°C	–40°C to +70°C	–40°C to +70°C
Withdrawal Force:	10N (Min.) 50N (Max.)	10N (Min.) 50N (Max.)	10N (Min.) 50N (Max.)
Mouldings:	Nylon, Flammability Rating UL94V-0	Nylon, Flammability Rating UL94V-0	Nylon, Flammability Rating UL94V-0
Contacts:	Brass, Nickel Plated.	Brass, Nickel Plated.	Brass, Nickel Plated.
Approvals:			
Accessories / Notes:	Unique octagon module allows choice of 4 cable positions		
Mating Outlets:	PX0675, PX0695, PX0578, PX0783, PX0793, PX0793/1	PX0675, PX0695, PX0578, PX0783, PX0793, PX0793/1, PX0716, PX0717 & PX0718	PX0675, PX0695, PX0578, PX0783, PX0793, PX0793/1, PX0716, PX0717 & PX0718
RoHS	Compliant	Compliant	Compliant

EN60 320-1 Standard Sheet C14 Class I Cold Condition & EN60 320-2-2 Standard Sheet F Class I Cold Condtion

SNAP FIT TO PANEL INLET/OUTLET

- Inlet/Outlet combination
- Panel Size1.2mm
- 4.8mm tabs
- 10A, 250V a.c.
  (15A, 250V a.c. UL & CSA)

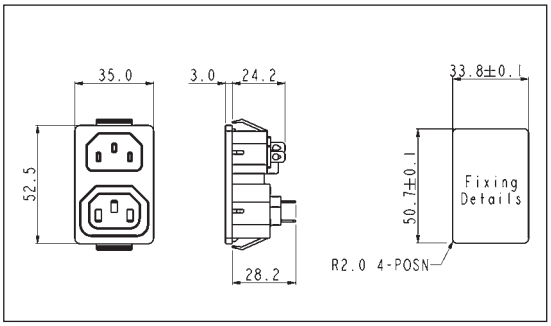

SNAP FIT TO PANEL FUSED INLET/OUTLET

- Fused Inlet/Outlet combination
- 1-6 outlet versions
- Panel Size 1.5mm
- Terminals:
  inlet: 4.8mm tabs
  outlet: solder tags
- 10A, 250V a.c.
  (15A, 250V a.c. UL)
- All outlet terminals linked, common earth throughout

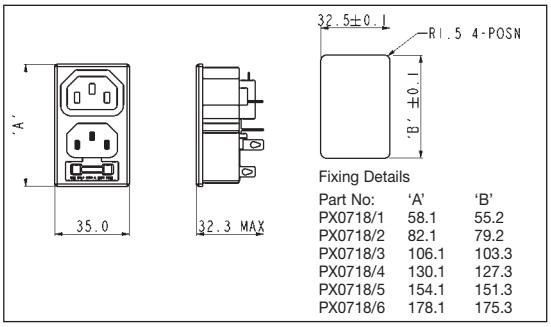

Fixing Details

Part No:	'A'	'B'
PX0718/1	58.1	55.2
PX0718/2	82.1	79.2
PX0718/3	106.1	103.3
PX0718/4	130.1	127.3
PX0718/5	154.1	151.3
PX0718/6	178.1	175.3

Specification	PX0716/Termination	PX0718/x/15/Termination
Fixing:	Snap fit 1.2mm accommodation	Snap fit 1.5mm accommodation
Terminations:	/48 (4.8mm tab)	/ST (outlet solder tag, inlet 4.8mm tab)
Max. Rating:	10A, 250V a.c. (UL 15A, 125V a.c.)	10A, 250V a.c. (UL 15A, 250V a.c.)
Insulation Resistance:	>100MΩ (500V d.c., 1 min.)	>100MΩ (500V d.c., 1 min.)
Dielectric Strength:	2kV (50Hz, 1 min.)	2kV (50Hz, 1 min.)
Operating Temp. Range:	–20°C to +70°C	–20°C to +70°C
Max. Pin Temp.:	+70°C	+70°C
Mouldings:	Nylon 66, Flammability Rating UL94V-0	Glass filled Thermoplastic, UL94V-0
Contacts:	Brass, Tin Plated	Brass, Tin Plated
Approvals:	c UL us	c UL us
Accessories / Notes:	-	-
Mates with:	PX0587, PX0587/SE, PX0588, PX0686, PX0686/SE	PX0587, PX0587/SE, PX0588, PX0686, PX0686/SE
RoHS	Compliant	Compliant

EN60 320-2-2 Standard Sheet F Class I

SNAP FIT TO PANEL OUTLET

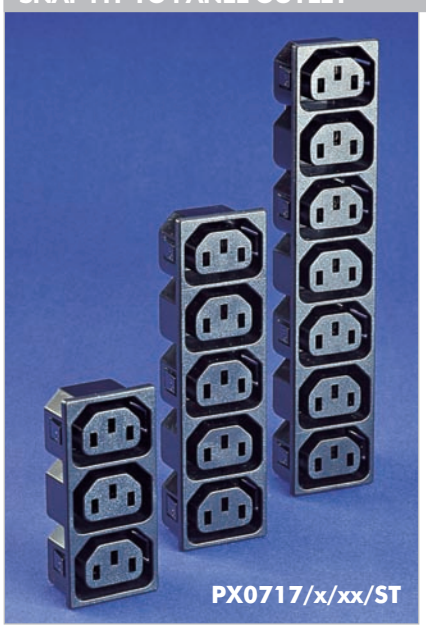

- Snap Fit to Panel
- Panel Size 1.5mm
- Solder Tabs
- 10A, 250V a.c. (15A, 250V a.c. UL)
- All Terminals Linked

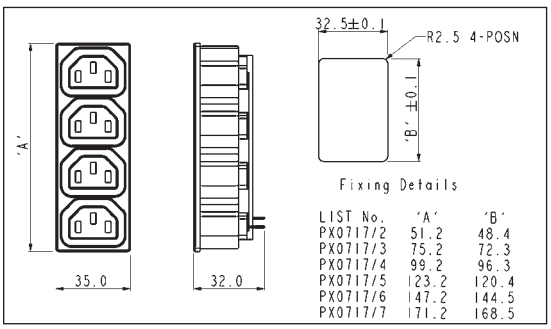

FLANGE MOUNT OUTLET

- Front of Panel Mount
- 6.3mm tabs
- 10A, 250V a.c. (15A, 250V a.c. UL)

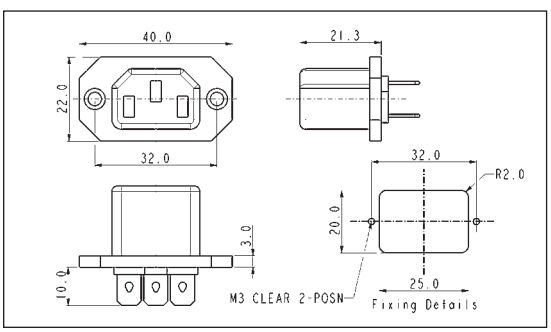

Specification	PX0717/x/15/Termination	PX0578/Termination
Fixing:	Snap fit 1.5mm accommodation	Flange
Terminations:	/ST (solder	/63 (6.3mm tab)
Max. Rating:	10A, 250V a.c. (UL 15A, 250v a.c.)	10A, 250V a.c. (UL 15A, 250v a.c.)
Insulation Resistance:	>100MΩ (500V d.c., 1 min.)	>100MΩ (500V d.c., 1 min.)
Dielectric Strength:	2kV (50Hz, 1 min.)	2kV (50Hz, 1 min.)
Operating Temp. Range:	–20°C to +70°C	–20°C to +70°C
Max. Pin Temp.:	-	-
Mouldings:	Glass filled Thermoplastic, UL94V-0	Glass filled Thermoplastic, UL94V-0
Contacts:	Brass, Tin plated	Brass, Tin plated
Approvals:	c UL us	c UL us
Accessories / Notes:	-	-
Mates with:	PX0686, PX0686/SE	PX0686, PX0686/SE
RoHS	Compliant	Compliant

EN60 320-2-2 Standard Sheet F Class I

FLANGE MOUNT OUTLET

- 2.8mm or 6.3mm Tabs
- 10A, 250V a.c.
  (15A, 250V a.c. UL & CSA)

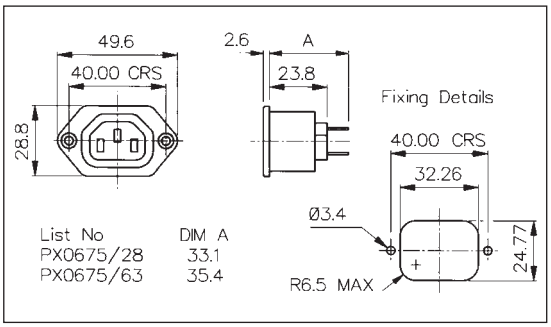

PC FLANGE REAR MOUNT OUTLET

- PC Spills
- 10A, 250V a.c.
  (15A, 250V a.c. UL & CSA)

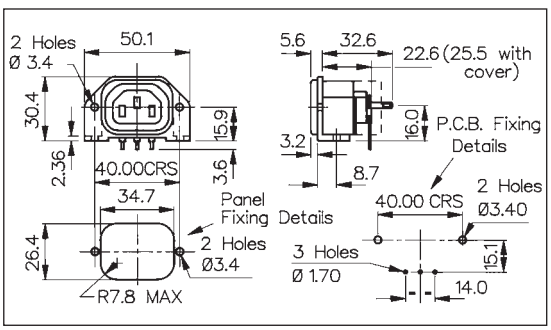

Specification	PX0675/Term/Col	PX0675/PC/Col
Fixing:	Flange	P.C.B./Flange
Terminations:	/28 (2.8mm solder), /48 (4.8mm tab), /63 (6.3mm tab)	P.C. Spills
Colours:	No suffix (Black), /WH (White), /GY (Grey)	No suffix (Black), /WH (White), /GY (Grey)
Max. Rating:	10A, 250V a.c. (UL & CSA 15A, 250V a.c.)	10A, 250V a.c. (UL & CSA 15A, 250V a.c.)
Contact Resistance:	<10mΩ	<10mΩ
Insulation Resistance:	>10^4 MΩ	>10^4 MΩ
A.C. Breakdown:	Pole-Pole 7kV. Poles-Panel 9kV	Pole-Pole 4kV. Poles-Panel 9kV
Operating Temp. Range:	–40°C to +70°C	–40°C to +70°C
Mouldings:	Nylon, Flammability Rating UL94V-0	Nylon, Flammability Rating UL94V-0
Contacts:	Brass, Tin Plated	Brass, Tin Plated
Approvals:	UR approval does not cover 4.8mm tab option	
Accessories / Notes:	P.No. 12075, KT0006, 14228 (See Pages 95-97)	Standard without cover. With cover add /12599 to P.No., 14228 (see page 96)
Mates with:	PX0685, PX0686, PX0686/SE	PX0685, PX0686, PX0686/SE
RoHS	Compliant	Compliant

EN60 320-2-2 Standard Sheet F Class I

SNAP FIT TO PANEL OUTLET

- Panel Sizes 1, 1.5, 2.0 or 3.0mm
- 2.8 or 6.3mm Tabs
- 10A, 250V a.c. (15A, 250V a.c. UL & CSA)

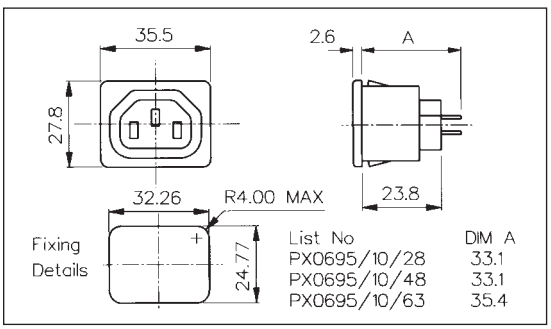

PC SNAP FIT TO PANEL OUTLET

- Panel Sizes 1, 1.5, 2.0 or 3.0mm
- PC Spills
- 10A, 250V a.c. (15A, 250V a.c. UL & CSA)

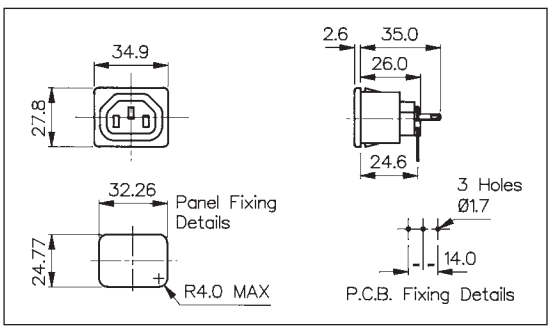

Specification	PX0695/Panel/Term/Col	PX0695/Panel/PC/Col
Fixing:	Snap fit, /10 (1mm), /15 (1.5mm), /20 (2mm), /30 (3mm)	Snap fit, /10 (1mm), /15 (1.5mm), /20 (2mm), /30 (3mm)
Terminations:	/28 (2.8mm solder), /63 (6.3mm tab)	P.C. Spills
Colours:	No suffix (Black), /WH (White), /GY (Grey)	No suffix (Black), /WH (White), /GY (Grey)
Max. Rating:	10A, 250V a.c. (UL & CSA 15A, 250V a.c.)	10A, 250V a.c. (UL & CSA 15A, 250V a.c.)
Contact Resistance:	<10mΩ	<10mΩ
Insulation Resistance:	>10^4 MΩ	>10^4 MΩ
A.C. Breakdown:	Pole-Pole 7kV. Poles-Panel 9kV	Pole-Pole 4kV. Poles-Panel 9kV
Operating Temp. Range:	–40°C to +70°C	–40°C to +70°C
Mouldings:	Nylon, Flammability Rating UL94V-0	Nylon, Flammability Rating UL94V-0
Contacts:	Brass, Tin Plated	Brass, Tin Plated
Approvals:		
Accessories / Notes:	P.No. 12075, 14228 (See Page 96-97)	P.No. 14228 (see page 96)
Mates with:	PX0685, PX0686, PX0686/SE,	PX0685, PX0686, PX0686/SE,
RoHS	Compliant	Compliant

EN60 320-2-2 Standard Sheet F Class I Shuttered

SNAP FIT TO PANEL OUTLET

- Shuttered
- Panel Sizes 1, 1.5, 2.0 or 3.0mm
- 2.8, 4.8 or 6.3mm Tabs
- 10A, 250V a.c. (15A, 250V a.c. UL & CSA)

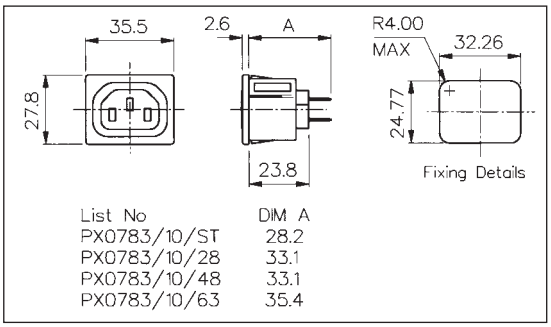

FLANGE MOUNT OUTLET

- Shuttered
- 2.8, 4.8 or 6.3mm Tabs
- 10A, 250V a.c. (15A, 250V a.c. UL & CSA)

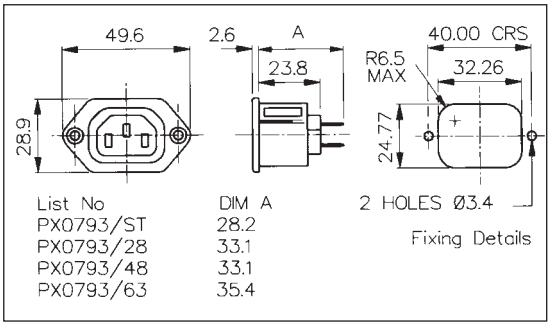

RECTANGULAR FLANGE MOUNT OUTLET

- Shuttered
- Rectangular Flange Mount Outlet
- 2.8, 4.8 or 6.3mm Tabs
- 10A, 250V a.c. (15A, 250V a.c. UL & CSA)

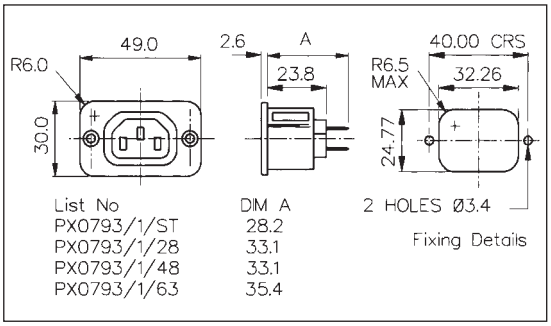

Specification	PX0783/Panel/Term/Col	PX0793/Term/Col	PX0793/1/Term/Col
Fixing:	Snap fit, /10 (1mm), /15 (1.5mm), /20 (2mm), /30 (3mm)	Flange	Rectangular Flange
Terminations:	/28 (2.8mm solder), /48 (4.8mm tab) /63 (6.3mm tab), /ST (solder)	/28 (2.8mm solder), /48 (4.8mm tab) /63 (6.3mm tab), /ST (solder)	/28 (2.8mm solder), /48 (4.8mm tab) /63 (6.3mm tab), /ST (solder)
Colours:	No suffix (Black), /WH (White), /GY (Grey)	No suffix (Black), /WH (White), /GY (Grey)	No suffix (Black), /WH (White), /GY (Grey)
Max. Rating:	10A, 250V a.c. (UL & CSA 15A, 250V a.c.)	10A, 250V a.c. (UL & CSA 15A, 250V a.c.)	10A, 250V a.c. (UL & CSA 15A, 250V a.c.)
Contact Resistance:	<10mΩ	<10mΩ	<10mΩ
Insulation Resistance:	$>10^4$ MΩ	$>10^4$ MΩ	$>10^4$ MΩ
A.C. Breakdown:	Pole-Pole 7kV. Poles-Panel 9kV	Pole-Pole 7kV. Poles-Panel 9kV	Pole-Pole 7kV. Poles-Panel 9kV
Operating Temp. Range:	–40°C to +70°C	–40°C to +70°C	–40°C to +70°C
Mouldings:	Nylon, Flammability Rating UL 94V-0	Nylon, Flammability Rating UL 94V-0	Nylon, Flammability Rating UL 94V-0
Contacts:	Brass, Tin Plated	Brass, Tin Plated	Brass, Tin Plated
Approvals:	UR approval does not cover 4.8mm tab option	UR approval does not cover 4.8mm tab option	UR approval only covers /ST version
Accessories / Notes:	P.No. 12075, 14228 (See Page 96-97)	P.No. 12075, KT0006, 14228 (See Pages 95-97)	P.No. 12075, KT0006, 14228 (See Pages 95-97)
Mates with:	PX0685, PX0686, PX0686/SE	PX0685, PX0686, PX0686/SE	PX0685, PX0686, PX0686/SE
RoHS	Compliant	Compliant	Compliant

EN60 320-2-2 Standard Sheet H Class II

FLANGE MOUNT OUTLET

- Two Pin Class II (No Earth Pin)
- 2.8, 4.8 or 6.3mm Tabs
- 10A, 250V a.c. (15A, 250V a.c. UL & CSA)

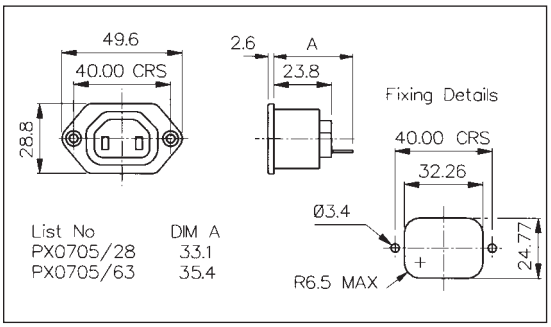

SNAP FIT TO PANEL OUTLET

- Two Pin Class II (No Earth Pin)
- Panel Sizes 1, 1.5, 2.0 or 3.0mm
- 2.8, 4.8 or 6.3mm Tabs
- 10A, 250V a.c. (15A, 250V a.c. UL & CSA)

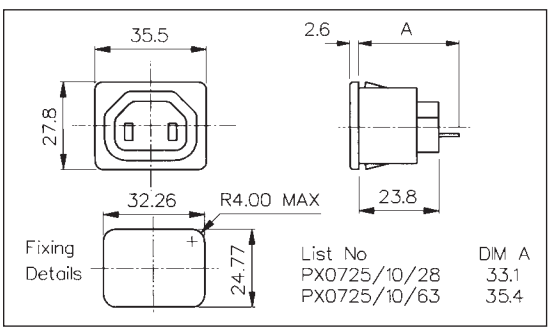

Specification	PX0705/Term/Col	PX0725/Panel/Term/Col
Fixing(Panel):	Flange	Snap fit, /10 (1mm), /15 (1.5mm), /20 (2mm), /30 (3mm)
Terminations:	/28 (2.8mm solder), /48 (4.8mm tab) /63 (6.3mm tab)	/28 (2.8mm solder), /48 (4.8mm tab) /63 (6.3mm tab)
Colours:	No suffix (Black), /WH (White), /GY (Grey)	No suffix (Black), /WH (White), /GY (Grey)
Max. Rating:	10A, 250V a.c. (UL & CSA 15A, 250V a.c.)	10A, 250V a.c. (UL & CSA 15A, 250V a.c.)
Contact Resistance:	<10mΩ	<10mΩ
Insulation Resistance:	$>10^4$ MΩ	$>10^4$ MΩ
A.C. Breakdown:	Pole-Pole 4kV. Poles-Panel 9kV	Pole-Pole 7kV. Poles-Panel 9kV
Operating Temp. Range:	–40°C to +70°C	–40°C to +70°C
Mouldings:	Nylon, Flammability Rating UL94V-0	Nylon, Flammability Rating UL94V-0
Contacts:	Brass, Tin Plated	Brass, Tin Plated
Approvals:	UR approval does not cover 4.8mm tab option	UR approval does not cover 4.8mm tab option
Accessories / Notes:	P.No. 12075 (See Page 97)	P.No. 12075 (See Page 97)
RoHS	Compliant	Compliant

EN60 320-1 Standard Sheet C19 Class I & Standard Sheet C20 Class I Cold Condition

C19 STRAIGHT FEMALE CABLE CONNECTOR

- Rewirable Screw Terminals
- 16A, 250V a.c. (20A, 250V a.c. UL and CSA)
- Wire Sizes (max); 3 x 2.5mm², 3 x 12AWG
- Overall cable diameter up to 12mm

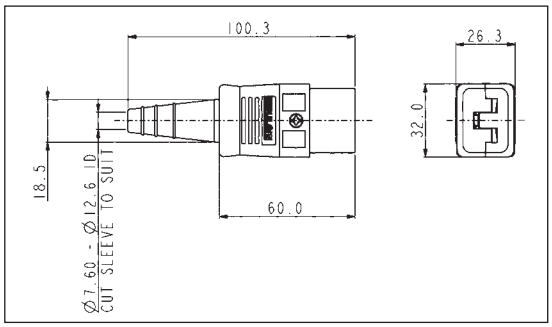

C20 FLANGE MOUNT INLET

- 6.3mm or 4.8mm Tabs
- 16A, 250V a.c. (20A, 250V a.c. UL and CSA)

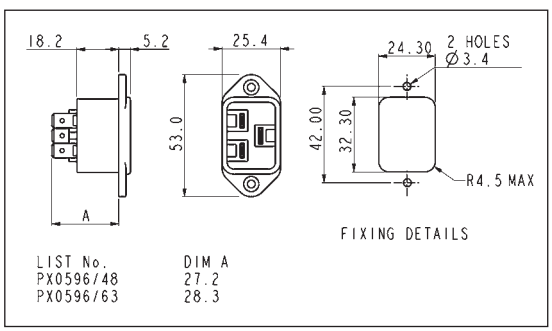

C20 SNAP FIT TO PANEL INLET

- Fits panel sizes 1, 1.5, 2.0 or 3.0mm
- 6.3mm or 4.8mm Tabs
- 16A, 250V a.c. (20A, 250V a.c. UL and CSA)

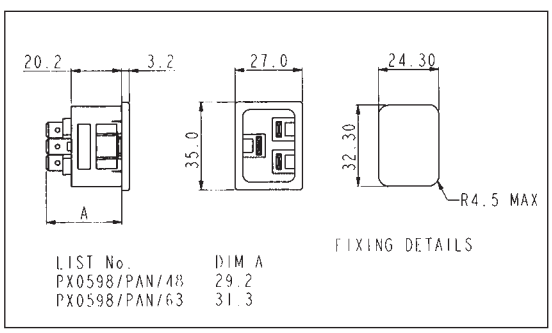

Specification	PX0599	PX0596/Termination	PX0598/Panel/Termination
Fixing (Panel):	-	Flange	Snap Fit, /10 (1mm), /15 (1.5mm), /20 (2mm), /30 (3mm)
Terminations:	Screw Terminals	/63 (6.3mm tab), /48 (4.8mm tab)	/63 (6.3mm tab), /48 (4.8mm tab)
Max. Rating:	16A, 250V ac 20A, 250V ac UL and CSA	16A, 250V ac 20A, 250V ac UL and CSA	16A, 250V ac 20A, 250V ac UL and CSA
Insulation Resistance:	>5MΩ	>10^6MΩ	>10^6MΩ
Dielectric Strength			
Between contacts:	1.5kV ac	1.5kV ac	1.5kV ac
Between contacts & accessible surfaces:	3kV ac	3kV ac	3kV ac
Operating Temp. Range:	–40°C to +70°C	–40°C to +70°C	–40°C to +70°C
Max. Pin Temp.:	-	70°C	70°C
Withdrawal Force:	15N Min, 60N Max.	-	-
Mouldings:	Nylon, Flammability Rating UL94V-0	Nylon, Flammability Rating UL94V-0	Nylon, Flammability Rating UL 94V-0
Contacts:	Brass, Clean	Pins: Brass, Nickel Plated Tabs: Brass, Tin Plated	Pins: Brass, Nickel Plated Tabs: Brass, Tin Plated
Approvals:			
Mating Connectors:	C20 Inlets; PX0596 Flange and PX0598 Snapfit	PX0599 Rewirable Connector	PX0599 Rewirable Connector
Accessories:		KT0012, P.No. 14064 (see Pages 95 & 97)	P.No. 14064 (see Page 97)
RoHS	Compliant	Compliant	Compliant

EN60 320-2-2 Standard Sheet J & Standard Sheet I, Class I Cold Condition

FLANGE MOUNT OUTLET

- Flange Mounting
- 6.3mm Tabs
- 16A, 250V a.c. (20A, 250V a.c., UL & CSA)

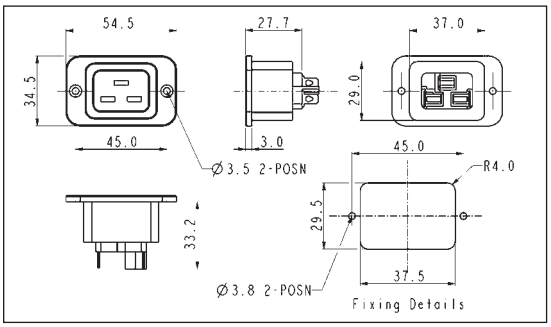

SNAP FIT TO PANEL OUTLET

- Snap Fit to Panel
- Panel Size 1.5mm
- 6.3mm Tabs
- 16A, 250V a.c. (20A, 250V a.c., UL & CSA)

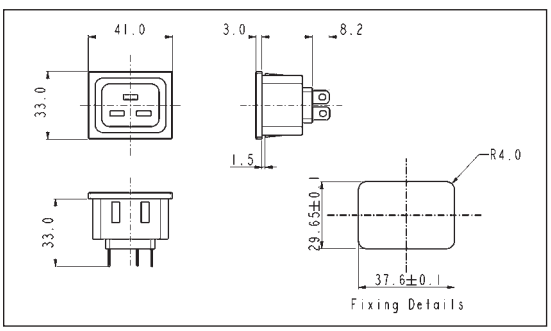

STRAIGHT CABLE CONNECTOR

- Re-wireable, screw terminals
- 16A, 250V a.c. (20A, 250V a.c. UL & CSA)
- Wire size (max.): 3 x 2.5mm², 3 x 12 AWG
- Overall cable diameter up to 12mm

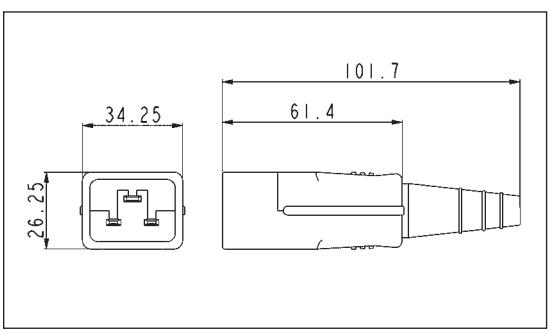

Specification	PX0591/Termination	PX0592/15/Termination	PX0594
Fixing:	Flange	Snap fit, 1.5mm accommodation	-
Terminations:	/63 (6.3mm tab)	/63 (6.3mm tab)	Screw terminals
Max. Rating:	16A, 250V a.c. (UL & CSA 20A, 250V a.c.)	16A, 250V a.c. (UL & CSA 20A, 250V a.c.)	16A, 250V a.c. (UL & CSA 20A, 250V a.c.)
Insulation Resistance:	>100MΩ (250V, 1 min.)	>100MΩ (250V, 1 min.)	>5MΩ (min)
Dielectric Strength			
Between contacts:	1.5kV ac	1.5kV ac	1.5kV ac
Between contacts & accessible surfaces:	3kV ac	3kV ac	3kV ac
Operating Temp. Range:	–40°C to +70°C	–40°C to +70°C	–40°C to +70°C
Max. Pin Temp.:	-	-	-
Withdrawal Force:	-	-	15N Min, 60N Max.
Mouldings:	P.B.T., Flammability Rating UL94V-0	Nylon, Flammability Rating UL94V-0	Nylon, Flammability Rating UL94V-0
Contacts:	Brass, Tin Plated	Brass, Tin Plated	Brass, Nickel Plated
Approvals:	c UL us, VDE	c UL us, VDE	VDE, UL, SP pending
Accessories / Notes:	-	-	-
Mates with:	PX0594	PX0594	PX0591, PX0592
RoHS	Compliant	Compliant	Compliant

Accessories

RETAINING CLIP

KT0006
(Shown with PX0580 & PX0587)

- Prevents Accidental Removal
- Fits flanged inlets

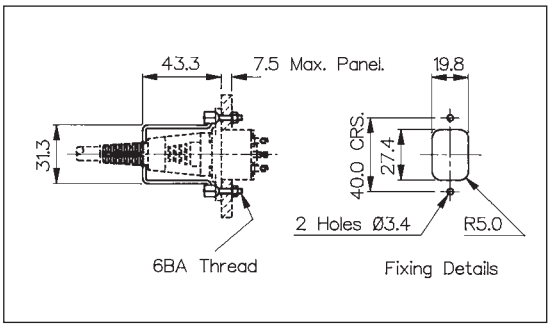

RETAINING CLIP

KT0009
(Shown with PF0001 & PX0587)

- Prevents Accidental Removal
- Fits fused flanged inlets

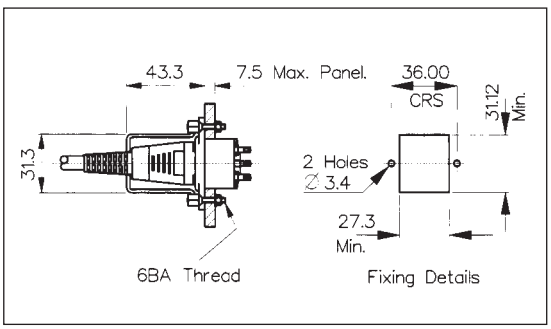

RETAINING CLIP

KT0012
(Shown with PX0596 & PX0599)

- Prevents Accidental Removal
- For use with PX0596 flanged inlet and PX0599 connector

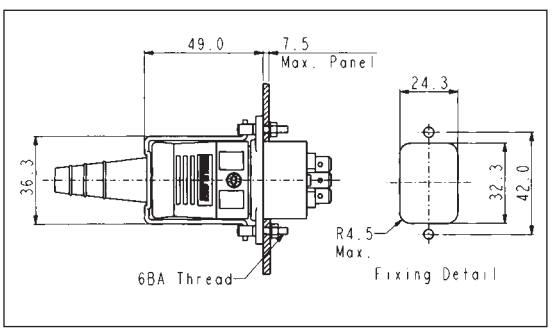

Specification	KT0006	KT0009	KT0012
	Retaining Clip to prevent accidental removal of connector. Fits: PX0580 + PX0587 PX0590 + PX0597 PX0690 + PX0587 PX0675 + PX0686 PX0793 + PX0686 PX0793/1 + PX0686	Retaining Clip to prevent accidental removal of connector. Fits: PF0001+ PX0587 PF0001/PC + PX0587 PF0002 + PX0587 PF0030 + PX0587	Retaining Clip to prevent accidental removal of connector. Fits: PX0596 + PX0599
Material:	Clip: Stainless Steel, other parts Brass, Nickel Plated	Clip: Stainless Steel, other parts Brass, Nickel Plated	Clip: Stainless Steel, other parts Brass, Nickel Plated
RoHS	Compliant	Compliant	Compliant

Accessories

BLANKING COVER

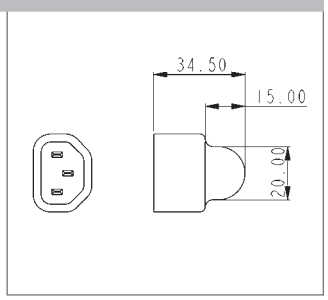

INSULATION BOOT

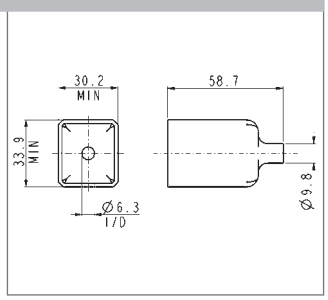

BLANKING COVER

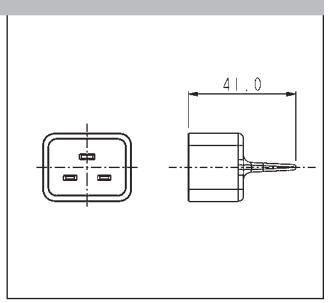

INSULATION BOOT

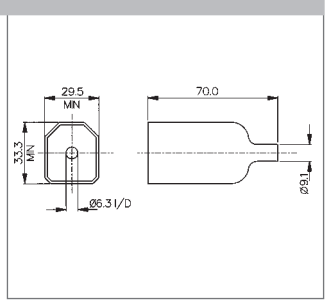

- Blanking covers
- Protects Front of Outlet Connector
- Protects Against Accidental Electric Shock

- PVC Insulation Boots
- Protects Rear of Connector
- Protects Against Accidental Electric Shock

Specification	P.No. 14228	P.No. 14277	P.No. 14340	P.No. 14317
	Blanking cover for PX0578, PX0675, PX0695, PX0783, PX0793, PX0716, PX0717, PX0718	Blanking cover for PX0591, PX0592,	Insulation boot for PS20, PS21, PS25, PS26	Insulation boot for PF0030, PF0033 (except /PC versions)
Operating Temp. Range:	–40°C to +70°C	–40°C to +70°C	–20°C to +60°C	–20°C to +60°C
Max. Working Voltage:	250V a.c.	250V a.c.	250V a.c.	250V a.c.
Flash Tested:	2kV a.c.	2kV a.c.	2kV a.c.	2kV a.c.
Material:	Nylon	Nylon	P.V.C.	P.V.C.
Flammability Rating:	UL94V-0	UL94V-0	UL94V-0	UL94V-0
RoHS	Compliant	Compliant	Compliant	Compliant

Accessories

INSULATION BOOT

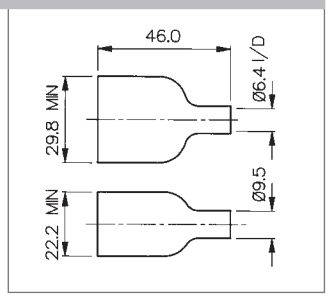

INSULATION BOOT

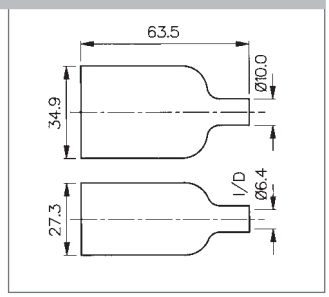

INSULATION BOOT

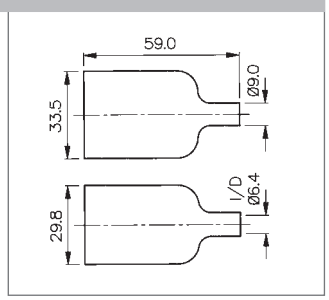

INSULATING BOOT

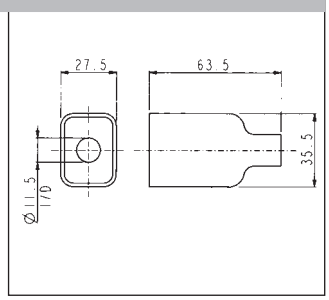

- PVC Insulation Boots
- Protects Rear of Connector
- Protects Against Accidental Electric Shock

Specification	P.No. 11328	P.No. 11987	P.No. 12075	P.No. 14064
	Insulation boot for PX0575, PX0579, PX0580, PX0590, PX0595	Insulation boot for PF range PF0001, PF0002, PF0006, PF0007, PF0011, PF0016 (except /PC versions)	Insulation boot for PX0675, PX0695, PX0705, PX0725, PX0783, PX0793, PX0793/1 (except /PC versions)	Insulation boot for PX0596, PX0598
Operating Temp. Range:	–20°C to +60°C	–20°C to +60°C	–20°C to +60°C	–20°C to +60°C
Max. Working Voltage:	250V a.c.	250V a.c.	250V a.c.	250V a.c.
Flash Tested:	2kV a.c.	2kV a.c.	2kV a.c.	2kV a.c.
Material:	P.V.C.	P.V.C.	P.V.C.	P.V.C.
Flammability Rating:	UL94V-0	UL94V-0	UL94V-0	UL94V-0
RoHS	Compliant	Compliant	Compliant	Compliant

Общество с ограниченной ответственностью «МосЧип» ИНН 7719860671 / КПП 771901001
Адрес: 105318, г.Москва, ул.Щербаковская д.3, офис 1107

Данный компонент на территории Российской Федерации

Вы можете приобрести в компании MosChip.

Для оперативного оформления запроса Вам необходимо перейти по данной ссылке:

http://moschip.ru/get-element

Вы можете разместить у нас заказ для любого Вашего проекта, будь то серийное производство или разработка единичного прибора.

В нашем ассортименте представлены ведущие мировые производители активных и пассивных электронных компонентов.

Нашей специализацией является поставка электронной компонентной базы двойного назначения, продукции таких производителей как XILINX, Intel (ex.ALTERA), Vicor, Microchip, Texas Instruments, Analog Devices, Mini-Circuits, Amphenol, Glenair.

Сотрудничество с глобальными дистрибьюторами электронных компонентов, предоставляет возможность заказывать и получать с международных складов практически любой перечень компонентов в оптимальные для Вас сроки.

На всех этапах разработки и производства наши партнеры могут получить квалифицированную поддержку опытных инженеров.

Система менеджмента качества компании отвечает требованиям в соответствии с ГОСТ Р ИСО 9001, ГОСТ РВ 0015-002 и ЭС РД 009

Офис по работе с юридическими лицами:

105318, г.Москва, ул.Щербаковская д.3, офис 1107, 1118, ДЦ «Щербаковский»

Телефон: +7 495 668-12-70 (многоканальный)

Факс: +7 495 668-12-70 (доб.304)

E-mail: info@moschip.ru

Skype отдела продаж:
moschip.ru
moschip.ru_4
moschip.ru_6
moschip.ru_9